REVISED 1-04

PR-7

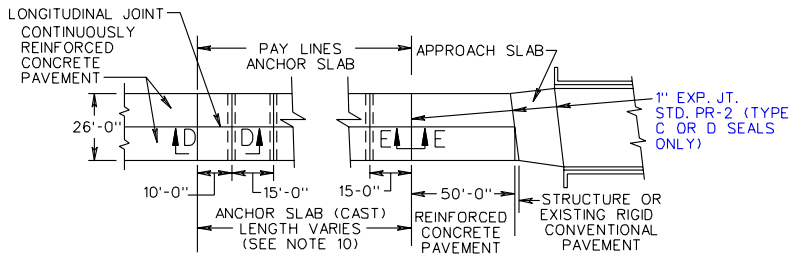

PLAN VIEW
ANCHOR SLAB TYPE I

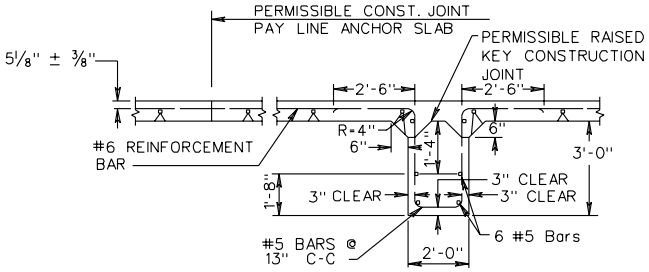

SECTION D-D

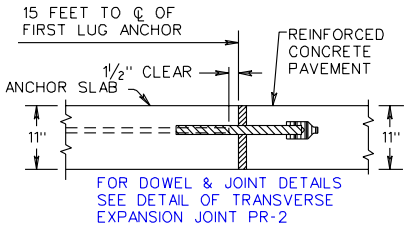

SECTION E-E
ANCHOR SLAB TYPE I

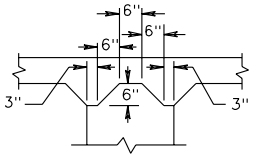

DETAIL-RAISED KEY
CONSTRUCTION JOINT

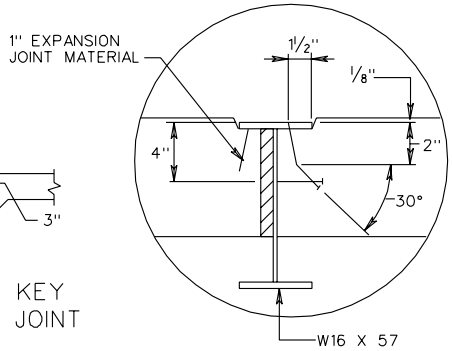

DETAIL A

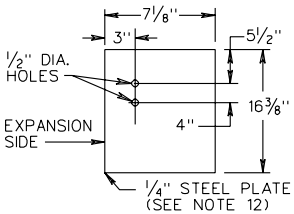

ANCHOR SLAB TYPE II
END PLATE DETAIL

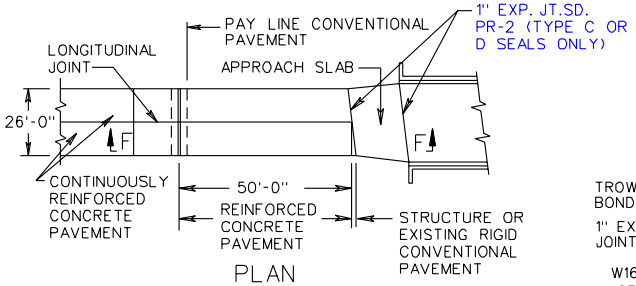

PLAN
ANCHOR SLAB TYPE II
(SEE NOTE 11)

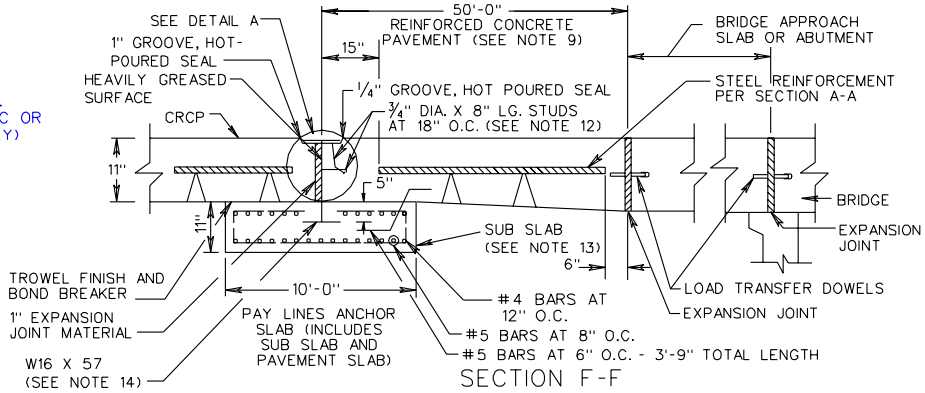

SECTION F-F
ANCHOR SLAB TYPE II

SHEET 2 OF 3

SEE SHEET 3 OF 3 FOR NOTES

11" THICK CONTINUOUSLY REINFORCED CONCRETE PAVEMENT
14 FOOT TRAVEL LANE

VIRGINIA DEPARTMENT OF TRANSPORTATION

SPECIFICATION REFERENCE

316

REV. 7/03

301.20