SECTION 1300

TRAFFIC CONTROL

STANDARD

THIS PAGE INTENTIONALLY LEFT BLANK

VDOT
ROAD AND BRIDGE STANDARDS

SHEET 1 OF 1

REVISION DATE

TITLE

VIRGINIA DEPARTMENT OF TRANSPORTATION

SPECIFICATION REFERENCE

STANDARD	TITLE	PAGE
CF-1	CABINET FOUNDATION DETAILS TYPE A TRAFFIC SIGNAL EQUIPMENT	1301.10
CF-2	CABINET FOUNDATION DETAILS	1301.20
CF-3	CABINET FOUNDATION DETAILS TYPE B TRAFFIC SIGNAL EQUIPMENT	1301.30
CF-4	CABINET FOUNDATION DETAILS TYPE A TRAFFIC SIGNAL CABINET AND UPS	1301.40
MP-2	SIGNAL POLE DETAILS (STRAIN AND COMBINATION LUMINAIRE STRAIN POLE)	1302.20
MP-3	SIGNAL POLE DETAILS (MAST ARM AND COMBINATION LUMINAIRE MAST ARM POLE)	1302.24
	SIGNAL POLE DETAILS (MAST ARM SIGNAL POLE MAXIMUM LOADING STANDARDS)	1302.25
	SIGNAL POLE DETAILS (MAST ARM SIGNAL POLE MAXIMUM LOADING STANDARDS)	1302.26
	SIGNAL POLE DETAILS (MAST ARM SIGNAL POLE MAXIMUM LOADING STANDARDS)	1302.27
PF-2	PEDESTAL POLE AND FOUNDATIONPEDESTAL	1302.30
	POLE AND FOUNDATION (INSTALLATION DETAILS)	1302.31
HH-1	HANDHOLE	1302.40
AB-1	ANCHOR BOLTS	1302.50
VS-1	VENTED VARMINT SCREEN	1302.60
SW-1	SIGNAL HEAD MOUNTING DETAILS SPAN WIRE	1303.10
SW-2	SIGNAL HEAD MOUNTING DETAILS SPAN WIRE	1303.20
SM-3	SIGNAL HEAD MOUNTING DETAILS - MAST ARM	1303.30
SMB-1	SIGNAL HEAD MOUNTING DETAILS - POLE TOP	1303.40
SMB-2	SIGNAL HEAD MOUNTING DETAILS - POLE TOP WITH TERMINAL COMPARTMENT AND BRACKET	1303.41
SMB-3	SIGNAL HEAD MOUNTING DETAILS - POLE SIDE MOUNTING BRACKET	1303.42
TA-1	TETHER WIRE DETAILS	1304.10
SMD-1,2	SIGN MOUNTING DETAILS	1305.10
WD-1	STEEL STRAIN SIGNAL POLE WIRING AND RIGGING DETAILS	1306.10
WD-2	WOOD POLE WIRING AND RIGGING	1306.20
PA-1,2	PEDESTRIAN ACTUATION	1307.10
PA-3	PEDESTRIAN ACTUATION DETAILS	1307.11
PA-4	PEDESTRIAN ACTUATION DETAILS	1307.12
SP-5,6,7,8,9	PEDESTRIAN SIGNAL INDICATION	1308.10
FB-2	FLASHING BEACON	1309.10
PF-8	SIGNAL POLE FOUNDATION	1310.12
LF-1	LIGHTING POLE FOUNDATION	1310.20
LP-1,2	LIGHTING POLE DETAILS CONVENTIONAL AND OFFSET	1311.10
LP-3	HIGH MAST LIGHT POLE	1311.20
SE-1	ELECTRICAL SERVICE	1312.10
SE-2	ELECTRICAL SERVICE	1312.20

INDEX OF SHEETS
SECTION 1300-TRAFFIC CONTROL

VIRGINIA DEPARTMENT OF TRANSPORTATION

VDOT
ROAD AND BRIDGE STANDARDS

REVISION DATE 09/18

2016 ROAD & BRIDGE STANDARDS

STANDARD	TITLE	PAGE
SE-3	ELECTRICAL SERVICE	1312.30
SE-4	ELECTRICAL SERVICE	1312.40
SE-5	ELECTRICAL SERVICE	1312.50
SE-6	ELECTRICAL SERVICE	1312.60
SE-7	ELECTRICAL SERVICE	1312.70
SE-8	ELECTRICAL SERVICE	1312.80
SE-9	ELECTRICAL SERVICE	1312.90
SE-10	ELECTRICAL SERVICE	1313.10
SE-11	ELECTRICAL SERVICE	1313.20
CCW-1	CONTROL CENTER WIRING	1314.10
TD-1A,B,C	LOOP DETECTOR	1315.10
JB-R1,R2	JUNCTION BOX TRAFFIC USE	1317.10
JB-S1,S2,S3,S4	JUNCTION BOX NON-DELIBERATE TRAFFIC USE	1317.20
JB-S1,S2,S3,S4	JUNCTION BOX NON-DELIBERATE TRAFFIC USE	1317.21
ECI-1,2	ELECTRICAL CONDUIT AND CONDUCTOR CABLE	1318.10
PCS-1	PROCEDURES FOR CALCULATING CENTROID AND TOTAL SQUARE FOOTAGE OF SIGN PANEL	1319.10
WSP-1	TEMPORARY SIGNS (FOR CONSTRUCTION, MAINTENANCE, PERMIT AND UTILITY ACTIVITIES) WOOD POST AND SQUARE TUBE POST SIGN STRUCTURES	1320.10
	TEMPORARY SIGNS (FOR CONSTRUCTION, MAINTENANCE, PERMIT AND UTILITY ACTIVITIES) WOOD POST OR SQUARE TUBE POST SIGN STRUCTURES	1320.11
	TEMPORARY SIGNS (FOR CONSTRUCTION, MAINTENANCE, PERMIT AND UTILITY ACTIVITIES) WOOD POST SIGN STRUCTURES	1320.12
	TEMPORARY SIGNS (FOR CONSTRUCTION, MAINTENANCE, PERMIT AND UTILITY ACTIVITIES) WOOD POST SIGN STRUCTURES - ATTACHMENT DETAILS	1320.13
	TEMPORARY SIGNS (FOR CONSTRUCTION, MAINTENANCE, PERMIT AND UTILITY ACTIVITIES) SQUARE TUBE POST SIGN STRUCTURES - ATTACHMENT DETAILS	1320.14
	TEMPORARY SIGNS (FOR CONSTRUCTION, MAINTENANCE, PERMIT AND UTILITY ACTIVITIES) SQUARE TUBE POST SIGN STRUCTURES - ATTACHMENT DETAILS	1320.15
	TEMPORARY SIGNS (FOR CONSTRUCTION, MAINTENANCE, PERMIT AND UTILITY ACTIVITIES) SQUARE TUBE POST SIGN STRUCTURES	1320.16
STP-1	SQUARE TUBE SIGN POST	1321.10
	SQUARE TUBE SIGN POST	1321.11
	SQUARE TUBE SIGN POST	1321.12
	SQUARE TUBE SIGN POST FOUNDATION TYPE A DETAILS	1321.13
	SQUARE TUBE SIGN POST FOUNDATION TYPE B DETAILS	1321.14
	SQUARE TUBE SIGN POST FOUNDATION TYPE C DETAILS	1321.15
	SQUARE TUBE SIGN POST FOUNDATION TYPE B AND C DETAILS	1321.16
	SQUARE TUBE SIGN POST FOUNDATION TYPE D AND E DETAILS	1321.17
	SQUARE TUBE SIGN POST FOUNDATION TYPE F DETAILS	1321.18
	SQUARE TUBE SIGN POST SIGN BRACING DETAILS	1321.19
	SQUARE TUBE SIGN POST SIGN BRACING DETAILS	1321.20
	SQUARE TUBE SIGN POST SIGN PANEL ATTACHMENT DETAILS	1321.21

INDEX OF SHEETS

SECTION 1300 - TRAFFIC CONTROL

VIRGINIA DEPARTMENT OF TRANSPORTATION

STANDARD	TITLE	PAGE
STP-2	FOUR INCH SQUARE TUBE SIGN POST MASH APPROVED DESIGN	1321.40
	FOUR INCH SQUARE TUBE SIGN POST MASH APPROVED DESIGN	1321.41
	FOUR INCH SQUARE TUBE SIGN POST POST AND FOUNDATION DETAILS	1321.42
	FOUR INCH SQUARE TUBE SIGN POST SLIP BASE DETAILS	1321.43
	FOUR INCH SQUARE TUBE SIGN POST HINGE ASSEMBLY DETAILS	1321.44
	FOUR INCH SQUARE TUBE SIGN POST FOUNDATION SIZES	1321.45
	FOUR INCH SQUARE TUBE SIGN POST FOUNDATION SIZES	1321.46
	FOUR INCH SQUARE TUBE SIGN POST FOUNDATION TYPES AND REINFORCEMENT	1321.47
	FOUR INCH SQUARE TUBE SIGN POST SIGN BRACING DETAILS	1321.48
	FOUR INCH SQUARE TUBE SIGN POST SIGN BRACING AND SIGN PANEL ATTACHMENT DETAILS	1321.49
	FOUR INCH SQUARE TUBE SIGN POST SIGN BRACING AND SIGN PANEL ATTACHMENT DETAILS	1321.50
	FOUR INCH SQUARE TUBE SIGN POST SIGN BRACING AND SIGN PANEL ATTACHMENT DETAILS	1321.51
SSP-VA	VA SIGN STRUCTURE	1322.10
	VA SIGN STRUCTURE	1322.11
	VA SIGN STRUCTURE	1322.12
	VA SIGN STRUCTURE	1322.13
SSP-VIA	INTERSTATE SIGN STRUCTURE	1323.10
	INTERSTATE SIGN STRUCTURE	1323.11
	INTERSTATE SIGN STRUCTURE	1323.12
	INTERSTATE SIGN STRUCTURE	1323.13
	INTERSTATE SIGN STRUCTURE	1323.14
	INTERSTATE SIGN STRUCTURE	1323.15
	INTERSTATE SIGN STRUCTURE	1323.16
	INTERSTATE SIGN STRUCTURE	1323.17
	INTERSTATE SIGN STRUCTURE	1323.18
	INTERSTATE SIGN STRUCTURE	1323.19
OSS-1	OVERHEAD SIGN STRUCTURE TYPICAL DETAILS	1324.10
	OVERHEAD SIGN STRUCTURE SOCKETED BASE PLATE CONNECTION	1324.11
	OVERHEAD SIGN STRUCTURE GUSSET PLATE CONNECTION	1324.12
	OVERHEAD SIGN STRUCTURE FOUNDATION DETAILS	1324.13
	OVERHEAD SIGN STRUCTURE ELECTRICAL DETAILS FOR SIGN LIGHTING	1324.14
	OVERHEAD SIGN STRUCTURE SIGN HANGER DETAILS	1324.15
	OVERHEAD SIGN STRUCTURE LUMINAIRE HANGER DETAILS	1324.16

INDEX OF SHEETS
SECTION 1300-TRAFFIC CONTROL

VIRGINIA DEPARTMENT OF TRANSPORTATION

VDOT
ROAD AND BRIDGE STANDARDS

REVISION DATE 08/19

1300.03

STANDARD	TITLE	PAGE
SPD-1	SIGN PANEL DESIGN	1325.10
	SIGN PANEL DESIGN	1325.11
SPD-2	EXTRUDED SIGN PANEL DESIGN	1325.20
	EXTRUDED SIGN PANEL DESIGN	1325.21
SPD-3	SIGN PANEL DESIGN	1325.30
SPD-4	SIGN PANEL DESIGN	1325.40
SPD-5	SIGN PANEL DESIGN	1325.50
SPD-6	SIGN PANEL DESIGN	1325.60
SPD-7	SIGN PANEL DESIGN	1325.70
PRS-1	PUNCHING REQUIREMENTS FOR SIGN PANELS	1326.10
ED-2	ROAD EDGE DELINEATOR	1327.10
ED-3	INTERSTATE ROAD EDGE DELINEATORS	1327.20
MM-1 & USP-1	MILEPOST MARKERS & U-TYPE STEEL POST	1328.10
ISD-1	INTERCHANGE EXIT RAMP SIGNING DETAILS MOUNTING HEIGHTS OF SIGN INSTALLATIONS	1329.10
PM-1	TYPICAL PAVEMENT MARKING INTERCHANGE	1330.10
PM-2	TYPICAL PAVEMENT MARKING LIMITED ACCESS LANE DROP	1330.20
PM-3	TYPICAL PAVEMENT MARKING UNSIGNALIZED INTERSECTIONS	1330.30
	TYPICAL PAVEMENT MARKING SIGNALIZED INTERSECTIONS	1330.31
	TYPICAL PAVEMENT MARKING SIGNALIZED INTERSECTIONS	1330.32
	TYPICAL PAVEMENT MARKING CROSSWALK MARKINGS	1330.33
PM-5	TYPICAL PAVEMENT MARKING LEFT TURN PAVEMENT MARKED MEDIAN	1330.50
	TYPICAL PAVEMENT MARKING TWO WAY LEFT-TURN LANE	1330.51
PM-6	TYPICAL PAVEMENT MARKINGS BICYCLE LANE	1330.60
	TYPICAL PAVEMENT MARKINGS BICYCLE LANE AND MARKED SHARED LANE	1330.61
PM-7	TYPICAL PAVEMENT MARKING RAILROAD-HIGHWAY GRADE CROSSING	1330.70
PM-8	TYPICAL PAVEMENT MARKER LOCATION DETAILS	1330.80
	TYPICAL PAVEMENT MARKER LOCATION DETAILS	1330.81
PM-9	PAVEMENT MARKING LOCATION DETAILS	1330.90

INDEX OF SHEETS

SECTION 1300 - TRAFFIC CONTROL

VIRGINIA DEPARTMENT OF TRANSPORTATION

STANDARD	TITLE	PAGE
PM-10	PAVEMENT WORD, SYMBOL, AND ARROW MARKINGS LETTERS AND NUMERALS DETAILS	1340.10
	PAVEMENT WORD, SYMBOL, AND ARROW MARKINGS WORDS DETAILS	1340.11
	PAVEMENT WORD, SYMBOL, AND ARROW MARKINGS SQUARE FOOT AREAS OF SYMBOLS AND ARROWS	1340.12
	PAVEMENT WORD, SYMBOL, AND ARROW MARKINGS ARROW DETAILS	1340.13
	PAVEMENT WORD, SYMBOL, AND ARROW MARKINGS ARROW DETAILS	1340.14
	PAVEMENT WORD, SYMBOL, AND ARROW MARKINGS ARROW DETAILS	1340.15
	PAVEMENT WORD, SYMBOL, AND ARROW MARKINGS SYMBOL DETAILS	1340.16
	PAVEMENT WORD, SYMBOL, AND ARROW MARKINGS SYMBOL DETAILS	1340.17
	PAVEMENT WORD, SYMBOL, AND ARROW MARKINGS SYMBOL DETAILS	1340.18
	PAVEMENT WORD, SYMBOL, AND ARROW MARKINGS SYMBOL DETAILS	1340.19
	PAVEMENT WORD, SYMBOL, AND ARROW MARKINGS SQUARE FOOT AREAS OF ROUTE SHIELD SYMBOLS	1340.20
	PAVEMENT WORD, SYMBOL, AND ARROW MARKINGS ROUTE SHIELD DETAILS	1340.21
	PAVEMENT WORD, SYMBOL, AND ARROW MARKINGS ROUTE SHIELD DETAILS	1340.22
	PAVEMENT WORD, SYMBOL, AND ARROW MARKINGS ROUTE SHIELD DETAILS	1340.23
	PAVEMENT WORD, SYMBOL, AND ARROW MARKINGS ROUTE SHIELD DETAILS	1340.24

INDEX OF SHEETS
SECTION 1300-TRAFFIC CONTROL

VIRGINIA DEPARTMENT OF TRANSPORTATION

VDOT
ROAD AND BRIDGE STANDARDS

REVISION DATE
NEW 09/18

SHEET 5 OF 5

1300.05

STANDARD

THIS PAGE INTENTIONALLY LEFT BLANK

VDOT
ROAD AND BRIDGE STANDARDS

SHEET 1 OF 1

REVISION DATE

TITLE

VIRGINIA DEPARTMENT OF TRANSPORTATION

SPECIFICATION REFERENCE

CF-1

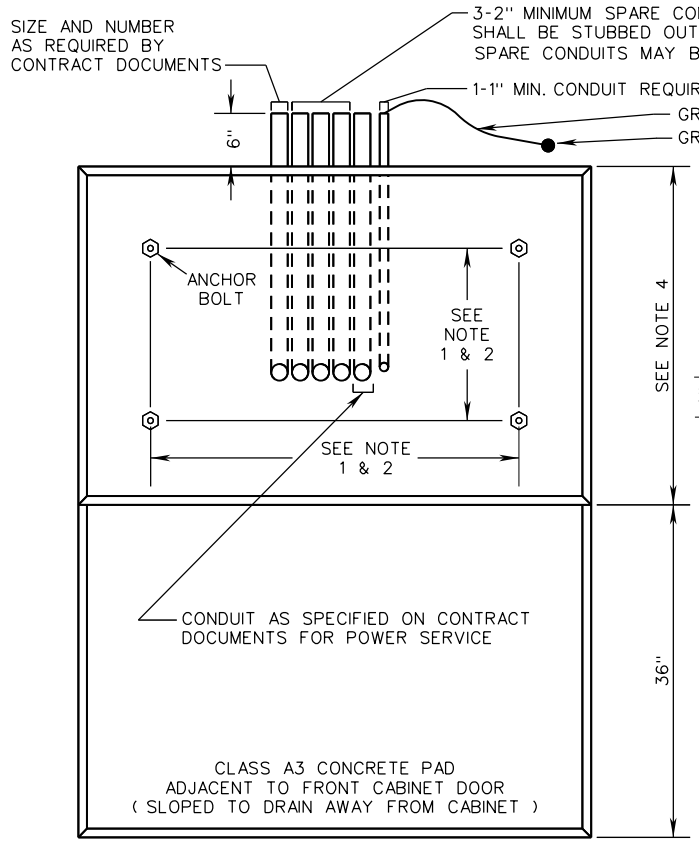

TOP VIEW

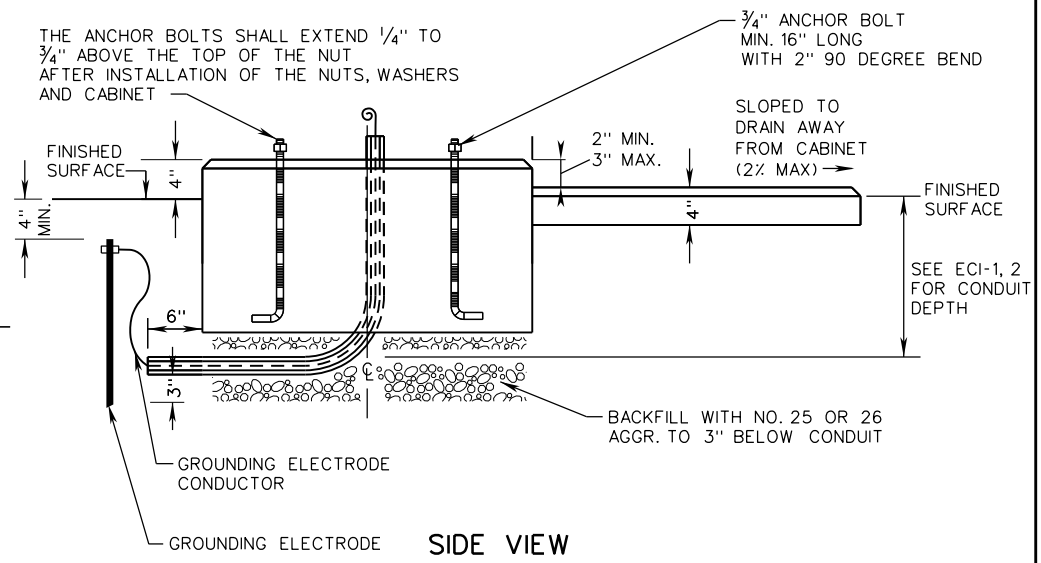

SIDE VIEW

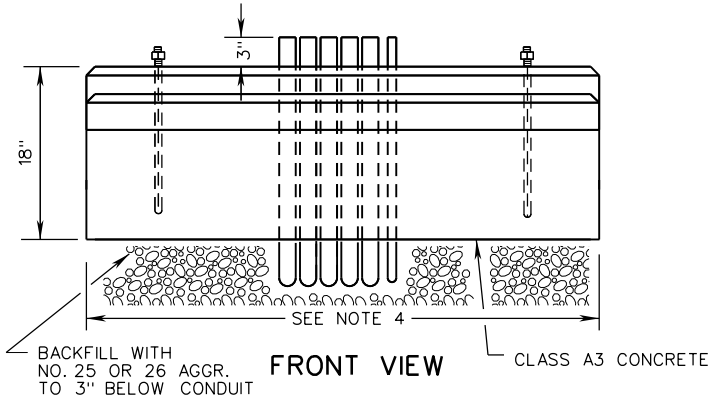

FRONT VIEW

NOTES:

1. ANCHOR BOLTS AND BOLT TEMPLATE SHALL BE FURNISHED WITH CABINET.
2. CABINET SHALL BE CENTERED ON FOUNDATION.
3. THE CONTROLLER CABINET AT THE INSIDE AND OUTSIDE FOUNDATION JOINTS SHALL BE SEALED WITH AN APPROVED WATERPROOF SILICONE SEALANT.
4. FOUNDATION LENGTH AND WIDTH SHALL PROJECT A MINIMUM 4" BEYOND ALL SIDES OF THE CABINET.
5. EXCAVATED AREAS SHALL BE BACKFILLED WITH AGGREGATE.
6. CF-1 FOUNDATION IS INTENDED FOR USE WITH TYPE "A" (NEMA TS-2) TRAFFIC SIGNAL EQUIPMENT CABINET.

SPECIFICATION REFERENCE	A COPY OF THE ORIGINAL SEALED AND SIGNED DRAWING IS ON FILE IN THE CENTRAL OFFICE.	VDOT ROAD AND BRIDGE STANDARDS	
700 703	CABINET FOUNDATION DETAILS TYPE A TRAFFIC SIGNAL EQUIPMENT VIRGINIA DEPARTMENT OF TRANSPORTATION	REVISION DATE 02/16	SHEET 1 OF 1 1301.10

CF-2

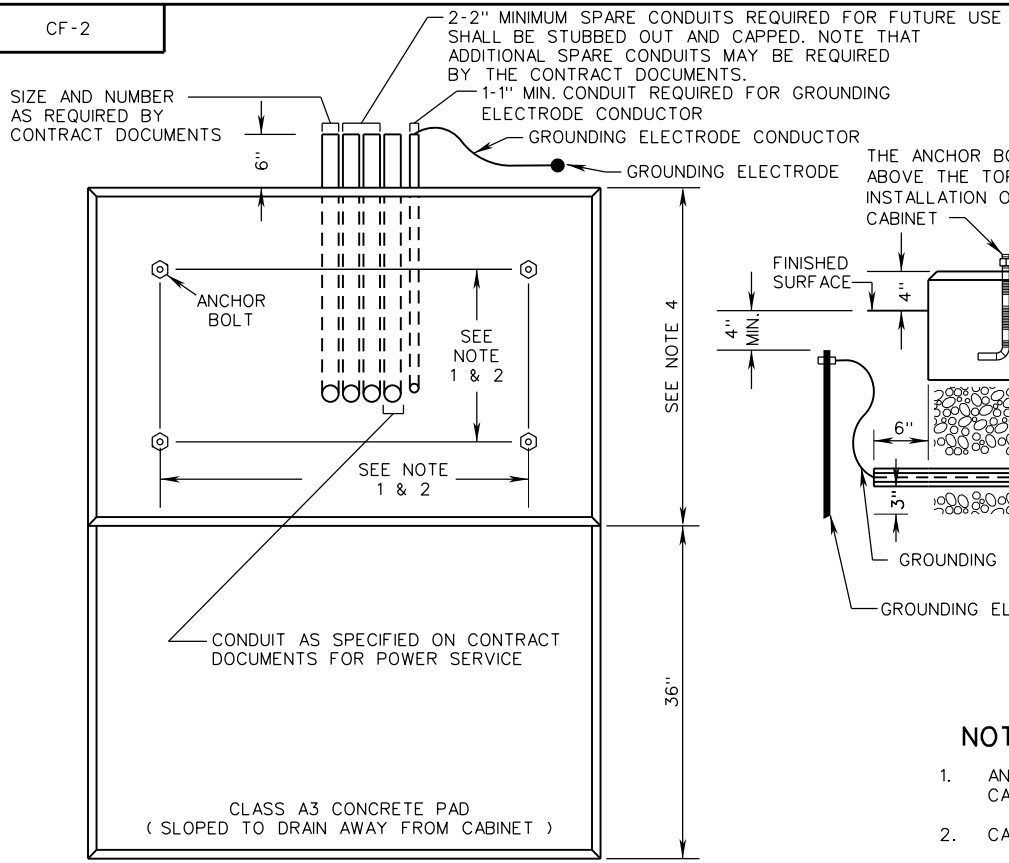

TOP VIEW

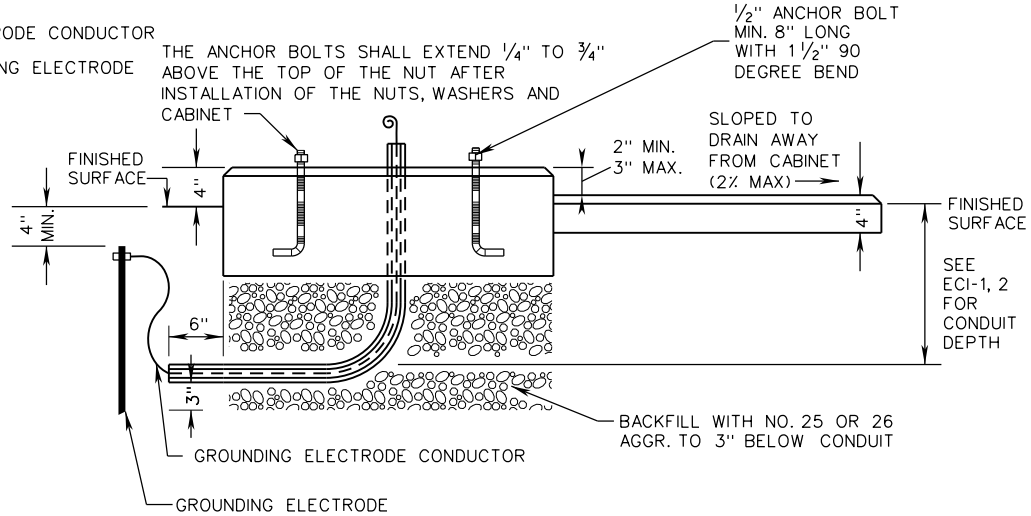

SIDE VIEW

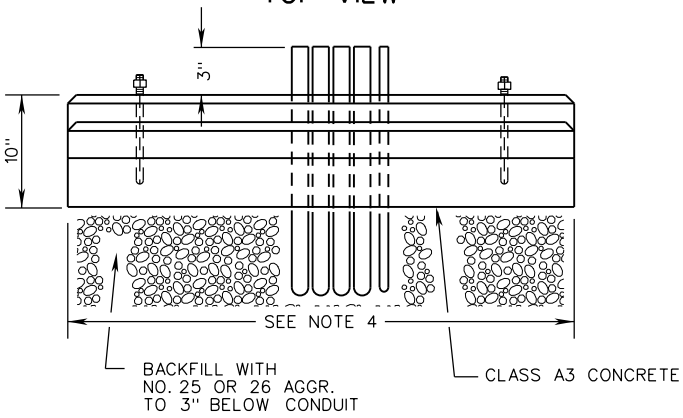

FRONT VIEW

NOTES:

1. ANCHOR BOLTS AND BOLT TEMPLATE SHALL BE FURNISHED WITH CABINET.
2. CABINET SHALL BE CENTERED ON FOUNDATION.
3. THE CONTROL CENTER CABINET AT THE INSIDE AND OUTSIDE FOUNDATION JOINTS SHALL BE SEALED WITH AN APPROVED WATERPROOF SILICONE SEALANT.
4. FOUNDATION LENGTH AND WIDTH SHALL PROJECT A MINIMUM 4" BEYOND ALL SIDES OF THE CABINET.
5. EXCAVATED AREAS SHALL BE BACKFILLED WITH AGGREGATE.
6. TYPE A AND TYPE B TRAFFIC SIGNAL CABINETS SHALL NOT BE INSTALLED ON CF-2 FOUNDATIONS.

VDOT ROAD AND BRIDGE STANDARDS	A COPY OF THE ORIGINAL SEALED AND SIGNED DRAWING IS ON FILE IN THE CENTRAL OFFICE.		SPECIFICATION REFERENCE
SHEET 1 OF 1	CABINET FOUNDATION DETAILS		700
1301.20	REVISION DATE 02/16	VIRGINIA DEPARTMENT OF TRANSPORTATION	

CF-3

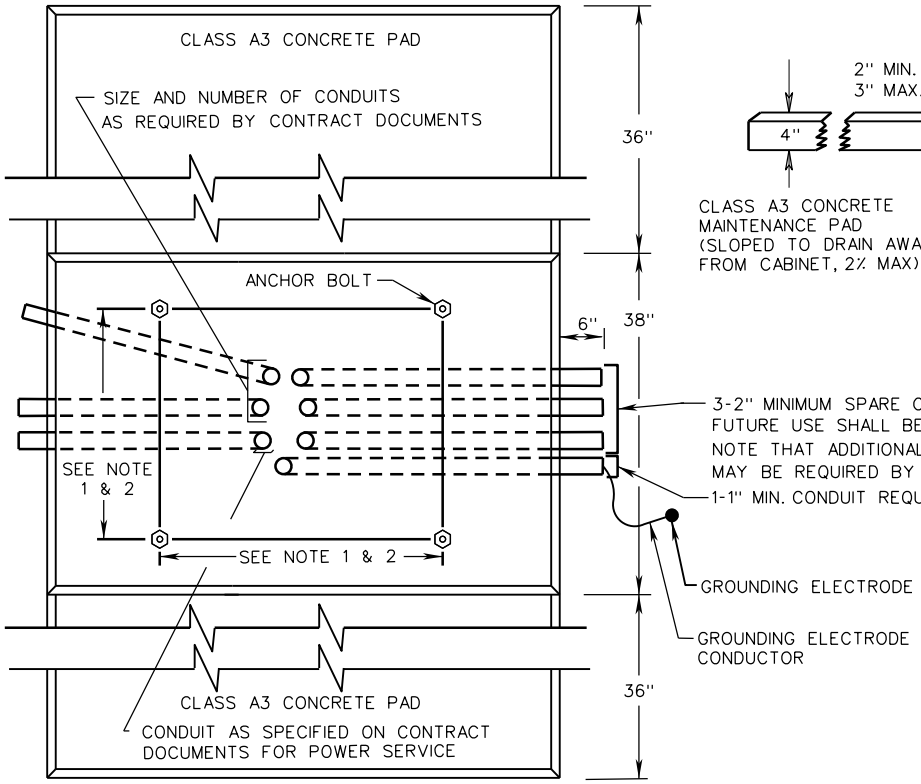

TOP VIEW

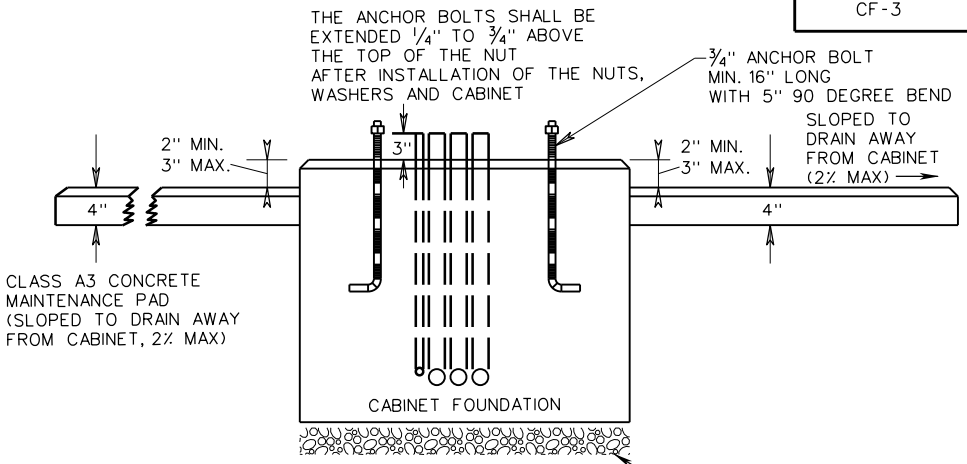

SIDE VIEW

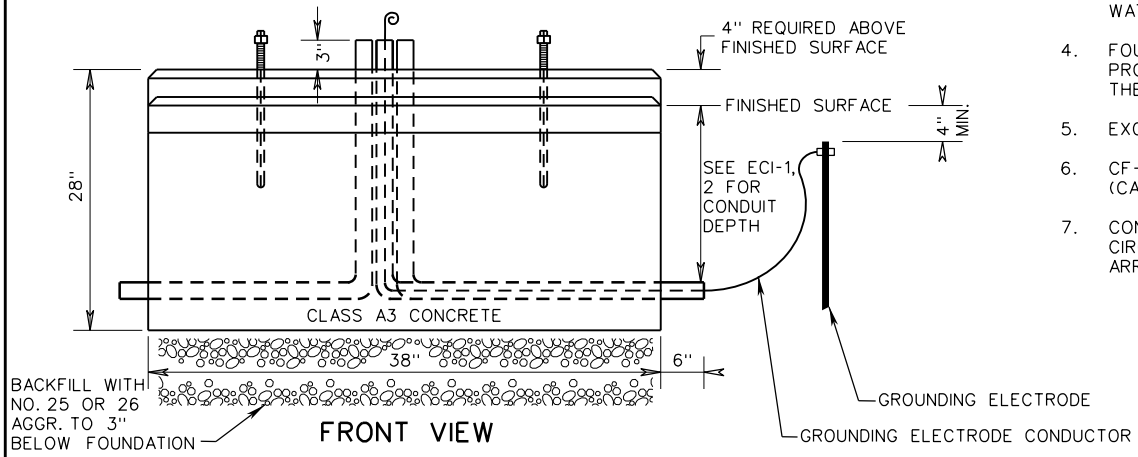

FRONT VIEW

NOTES:

1. ANCHOR BOLTS, BOLT TEMPLATE, AND BASE ADAPTER (METAL RISER) SHALL BE FURNISHED WITH CABINET.
2. CABINET ON BASE ADAPTER (METAL RISER) SHALL BE CENTERED ON FOUNDATION.
3. THE CONTROLLER CABINET AT THE INSIDE AND OUTSIDE FOUNDATION JOINTS SHALL BE SEALED WITH AN APPROVED WATERPROOF SILICONE SEALANT.
4. FOUNDATION LENGTH AND WIDTH SHALL BE AS REQUIRED TO PROJECT NO LESS THAN A MINIMUM 4" BEYOND ALL SIDES OF THE CABINET.
5. EXCAVATED AREAS SHALL BE BACKFILLED WITH AGGREGATE.
6. CF-3 FOUNDATION IS INTENDED FOR USE WITH TYPE "B" (CALTRANS MODEL 332) TRAFFIC SIGNAL EQUIPMENT CABINET.
7. CONDUITS ENTERING THE FOUNDATION SHALL BE ARRANGED IN A CIRCULAR PATTERN. THE CONTRACTOR SHALL SUBMIT A CONDUIT ARRANGEMENT PLAN FOR APPROVAL PRIOR TO PLACEMENT.

SPECIFICATION REFERENCE	A COPY OF THE ORIGINAL SEALED AND SIGNED DRAWING IS ON FILE IN THE CENTRAL OFFICE.	VDOT ROAD AND BRIDGE STANDARDS	
700 703	CABINET FOUNDATION DETAILS TYPE B TRAFFIC SIGNAL EQUIPMENT VIRGINIA DEPARTMENT OF TRANSPORTATION	REVISION DATE 02/16	SHEET 1 OF 2 1301.30

CF-3

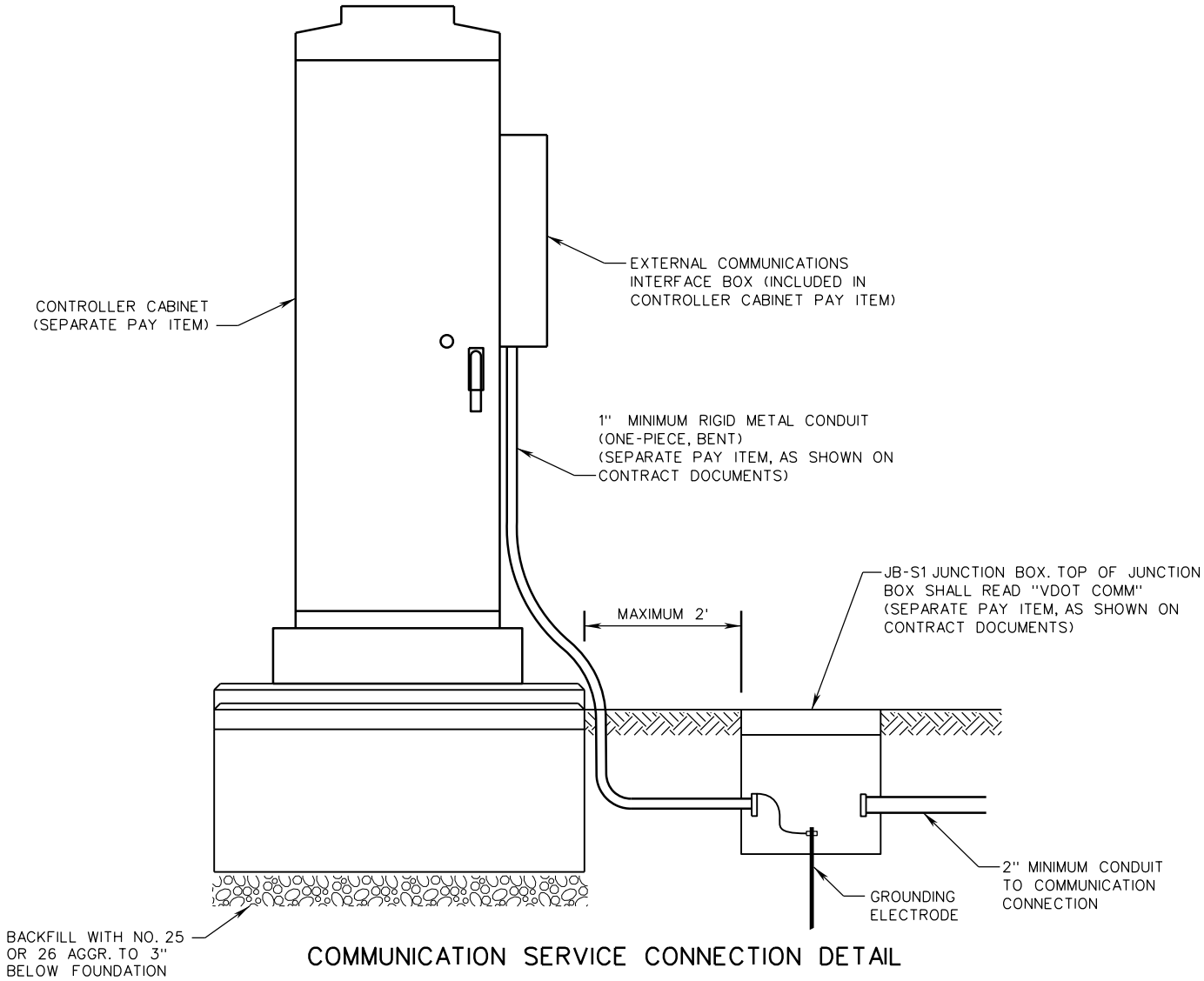

COMMUNICATION SERVICE CONNECTION DETAIL

VDOT ROAD AND BRIDGE STANDARDS	A COPY OF THE ORIGINAL SEALED AND SIGNED DRAWING IS ON FILE IN THE CENTRAL OFFICE.		SPECIFICATION REFERENCE
SHEET 2 OF 2	CABINET FOUNDATION DETAILS		
1301.31	REVISION DATE NEW 02/16	TYPE B TRAFFIC SIGNAL EQUIPMENT VIRGINIA DEPARTMENT OF TRANSPORTATION	700 703

STANDARD

THIS PAGE INTENTIONALLY LEFT BLANK

SPECIFICATION REFERENCE	TITLE VIRGINIA DEPARTMENT OF TRANSPORTATION	VDOT ROAD AND BRIDGE STANDARDS REVISION DATE	SHEET 1 OF 1 ____._

CF-4

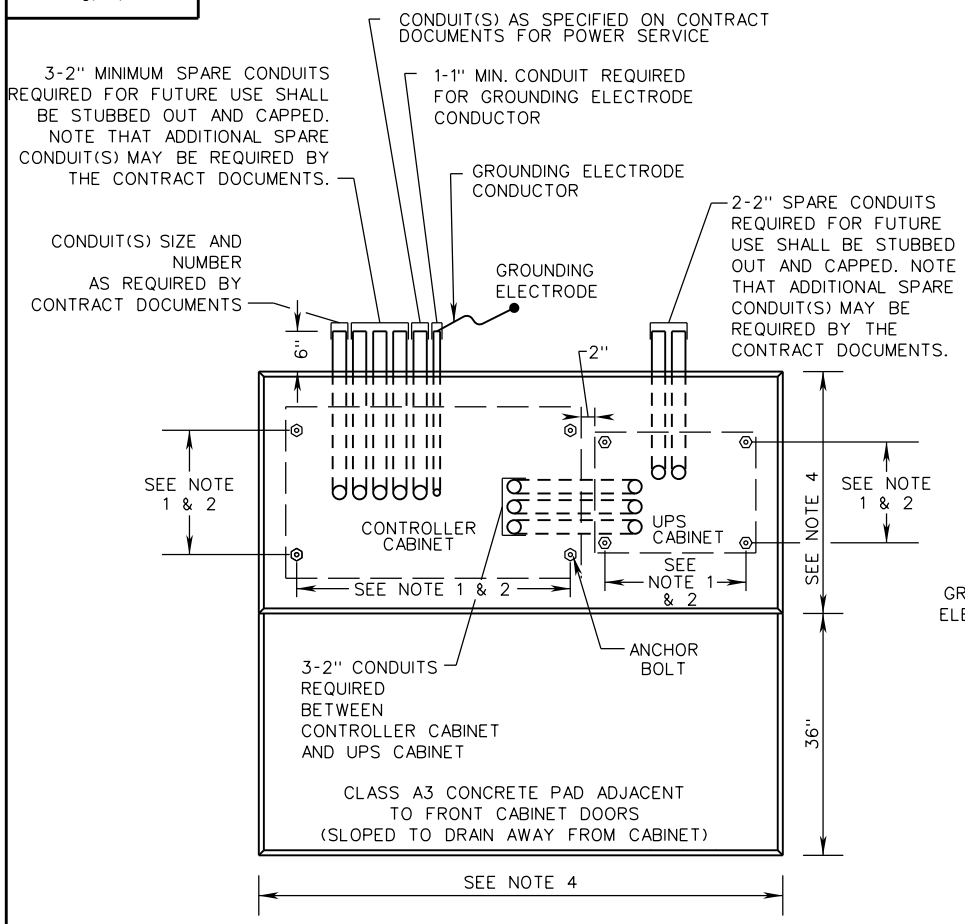

TOP VIEW

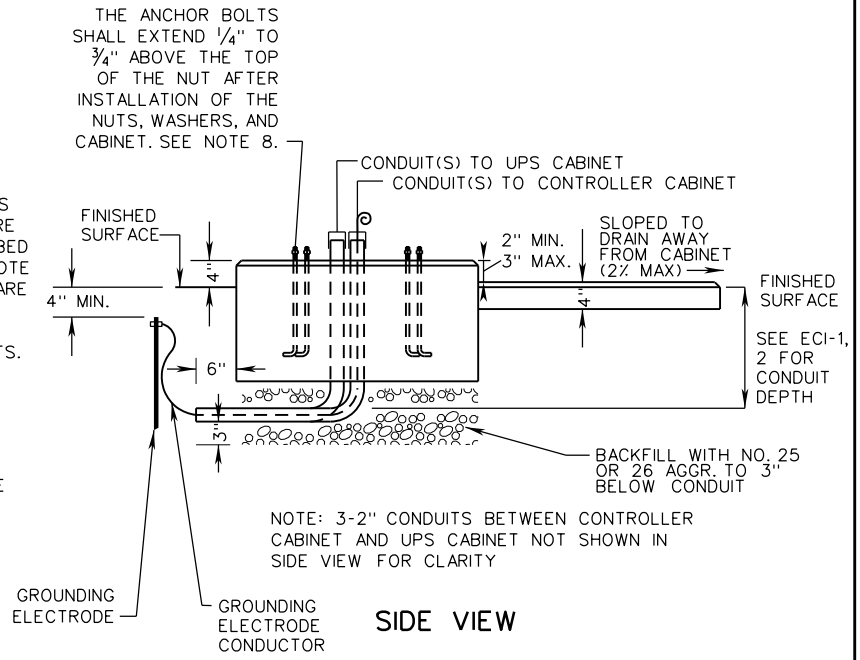

SIDE VIEW

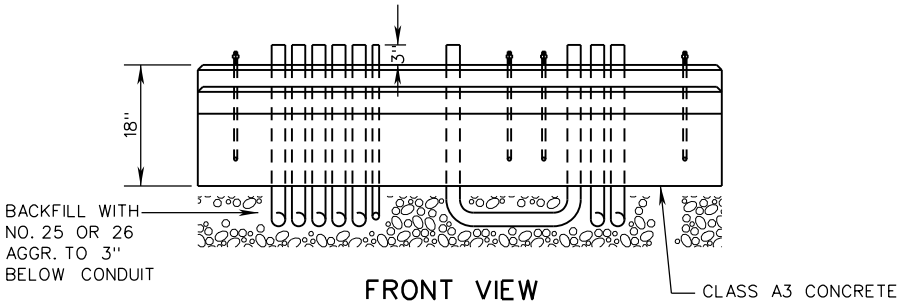

FRONT VIEW

NOTES:

1. ANCHOR BOLTS AND BOLT TEMPLATES SHALL BE FURNISHED WITH BOTH CABINETS.
2. THE CONTROLLER CABINET AND UPS CABINET SHALL BE CENTERED FROM FRONT TO BACK ON THE FOUNDATION. THE TOTAL WIDTH OF THE CONTROLLER CABINET AND UPS CABINET SHALL BE CENTERED FROM SIDE TO SIDE ON THE FOUNDATION.
3. THE CONTROLLER CABINET AND UPS CABINET AT THE INSIDE AND OUTSIDE FOUNDATION JOINTS SHALL BE SEALED WITH AN APPROVED WATERPROOF SILICONE SEALANT.
4. THE FOUNDATION WIDTH AND LENGTH SHALL PROJECT A MINIMUM 4" BEYOND ALL SIDES OF THE CABINETS.
5. EXCAVATED AREAS SHALL BE BACKFILLED WITH AGGREGATE.
6. CF-4 FOUNDATION IS INTENDED FOR USE WITH TYPE "A" (NEMA TS-2) TRAFFIC SIGNAL EQUIPMENT CABINET WITH SEPARATE UPS CABINET.
7. DOOR HINGE LOCATIONS SHALL BE IN ACCORDANCE WITH SECTION 703 OF THE SPECIFICATIONS.
8. EACH CABINET SHALL HAVE FOUR 3/4" DIA. X 16" LONG WITH 2" 90 DEGREE BEND ANCHOR BOLTS.

VDOT ROAD AND BRIDGE STANDARDS	A COPY OF THE ORIGINAL SEALED AND SIGNED DRAWING IS ON FILE IN THE CENTRAL OFFICE.		SPECIFICATION REFERENCE
SHEET 1 OF 1	CABINET FOUNDATION DETAILS		700
1301.40	TYPE A TRAFFIC SIGNAL EQUIPMENT CABINET AND UPS	REVISION DATE NEW 02/16	703
	VIRGINIA DEPARTMENT OF TRANSPORTATION		

MP-2

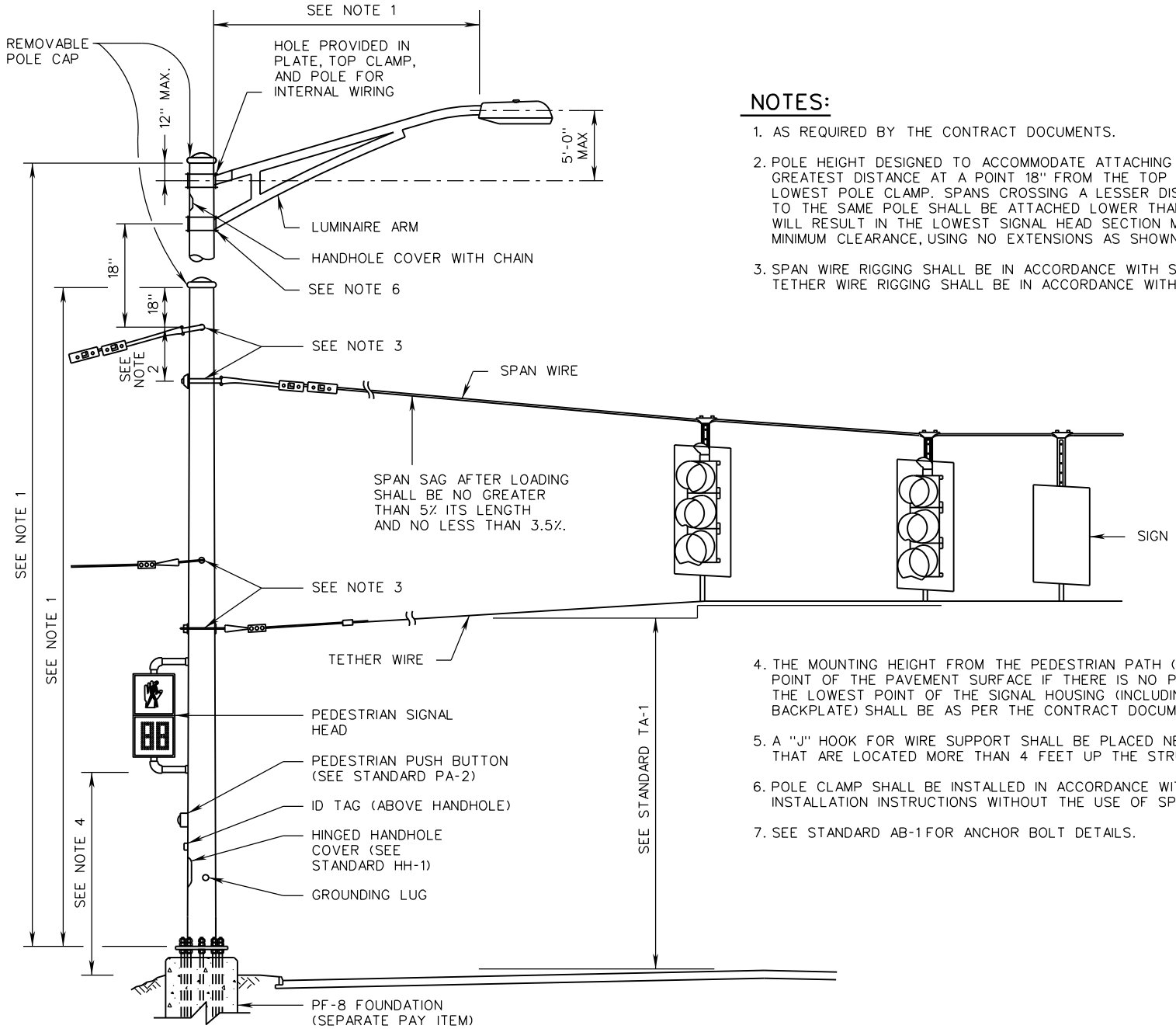

NOTES:

1. AS REQUIRED BY THE CONTRACT DOCUMENTS.
2. POLE HEIGHT DESIGNED TO ACCOMMODATE ATTACHING SPAN ACROSS THE GREATEST DISTANCE AT A POINT 18" FROM THE TOP OF THE POLE OR THE LOWEST POLE CLAMP. SPANS CROSSING A LESSER DISTANCE AND ATTACHED TO THE SAME POLE SHALL BE ATTACHED LOWER THAN 18" AS DOING SO WILL RESULT IN THE LOWEST SIGNAL HEAD SECTION MAINTAINING THE MINIMUM CLEARANCE, USING NO EXTENSIONS AS SHOWN BY STANDARD SW-1.
3. SPAN WIRE RIGGING SHALL BE IN ACCORDANCE WITH STANDARD WD-1. TETHER WIRE RIGGING SHALL BE IN ACCORDANCE WITH STANDARD TA-1.
4. THE MOUNTING HEIGHT FROM THE PEDESTRIAN PATH (OR THE HIGHEST POINT OF THE PAVEMENT SURFACE IF THERE IS NO PEDESTRIAN PATH) TO THE LOWEST POINT OF THE SIGNAL HOUSING (INCLUDING BRACKETS AND BACKPLATE) SHALL BE AS PER THE CONTRACT DOCUMENTS.
5. A "J" HOOK FOR WIRE SUPPORT SHALL BE PLACED NEAR ALL HANDHOLES THAT ARE LOCATED MORE THAN 4 FEET UP THE STRUCTURE.
6. POLE CLAMP SHALL BE INSTALLED IN ACCORDANCE WITH MANUFACTURER'S INSTALLATION INSTRUCTIONS WITHOUT THE USE OF SPACERS OR SHIMS.
7. SEE STANDARD AB-1 FOR ANCHOR BOLT DETAILS.

SPECIFICATION REFERENCE	A COPY OF THE ORIGINAL SEALED AND SIGNED DRAWING IS ON FILE IN THE CENTRAL OFFICE.	VDOT ROAD AND BRIDGE STANDARDS	
700	STEEL STRAIN POLE DETAILS STRAIN AND COMBINATION LUMINAIRE STRAIN POLE VIRGINIA DEPARTMENT OF TRANSPORTATION	REVISION DATE 08/17	SHEET 1 OF 1 1302.20

MP-3

NOTES:

1. AS REQUIRED BY THE SPECIFICATIONS.
2. SIGNAL WIRING HOLE SHALL BE LOCATED ON THE BOTTOM OF THE ARM DIRECTLY BEHIND THE HANGER ASSEMBLY WHEN STANDARD SM-3 HANGER ASSEMBLIES ARE REQUIRED. SIGNAL WIRING SHALL BE CONCEALED IN THE STANDARD SM-3 HANGER ASSEMBLIES.
3. THE ALIGNMENT OF THE LUMINAIRE ARM SHALL BE AS SHOWN IN THE CONTRACT DOCUMENTS.
4. AFTER THE LOADS ARE APPLIED, THE VERTICAL CLEARANCE FROM THE HIGHEST POINT OF THE PAVEMENT SURFACE SHALL BE:
   A. 16' MINIMUM (15' MINIMUM FOR MAINTENANCE ACTIVITIES) TO THE LOWEST POINT OF THE SIGNAL HEAD ASSEMBLIES (INCLUDING BACKPLATES) AND SIGNS.
   B. 25' MAXIMUM TO THE TOPS OF THE SIGNAL HOUSINGS.
5. THE MOUNTING HEIGHT FROM THE PEDESTRIAN PATH (OR THE HIGHEST POINT OF THE PAVEMENT SURFACE IF THERE IS NO PEDESTRIAN PATH) TO THE LOWEST POINT OF THE SIGNAL HOUSING (INCLUDING BRACKETS AND BACKPLATE) SHALL BE AS PER THE CONTRACT DOCUMENTS.
6. A "J" HOOK FOR WIRE SUPPORT SHALL BE PLACED NEAR ALL HANDHOLES THAT ARE LOCATED MORE THAN 4 FEET UP THE STRUCTURE.
7. MAST ARMS MAY BE SPLICED. IF SPLICED, FIELD ASSEMBLY SHALL ACHIEVE A SNUG TIGHT JOINT. MATING SURFACES SHALL BE SMOOTH AND FREE OF BURRS, DENTS, OR LUMPS OF ZINC.
8. POLE CLAMP SHALL BE INSTALLED IN ACCORDANCE WITH MANUFACTURER'S INSTALLATION INSTRUCTIONS WITHOUT THE USE OF SPACERS OR SHIMS.
9. MAST ARMS SHALL BE CONNECTED TO THE POLE USING THRU-BOLTS. NEITHER WELDED STUDS NOR THREADED PLATES WILL BE ALLOWED.
10. DUAL MAST ARM CONNECTIONS MAY BE MADE BY USING TWO SINGLE ARM CONNECTIONS WITH THE LONGER MAST ARM ON THE BOTTOM.
11. HANDHOLES SHALL ONLY BE PROVIDED FOR COMBINATION MAST ARM / LUMINAIRE ARM POLES.

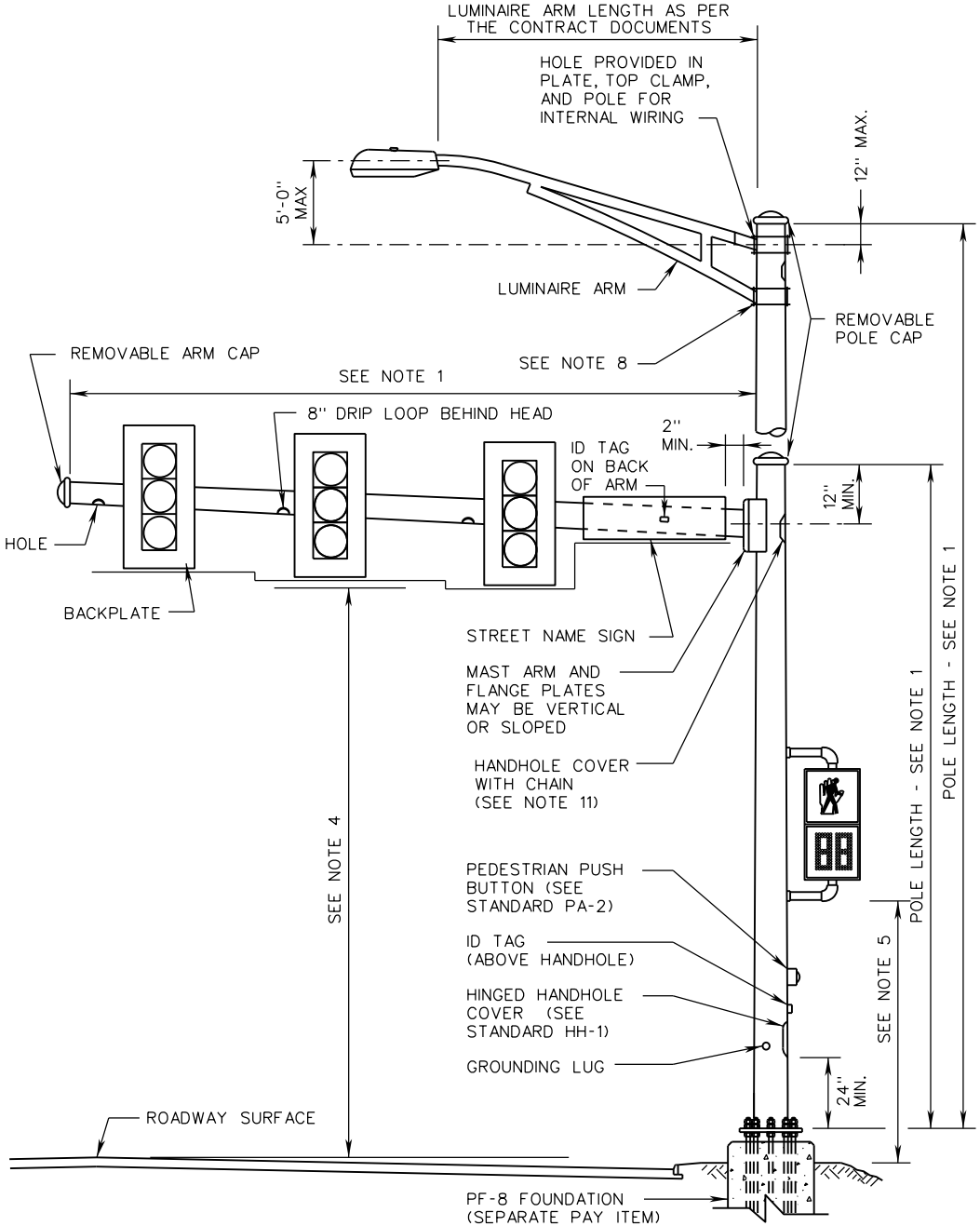

VDOT ROAD AND BRIDGE STANDARDS	A COPY OF THE ORIGINAL SEALED AND SIGNED DRAWING IS ON FILE IN THE CENTRAL OFFICE.		SPECIFICATION REFERENCE
SHEET 1 OF 4	SIGNAL POLE DETAILS		
1302.24	MAST ARM AND COMBINATION LUMINAIRE MAST ARM POLE	REVISION DATE 09/18	700
	VIRGINIA DEPARTMENT OF TRANSPORTATION		

NOTES:

1. THESE LOADING REQUIREMENTS SHALL BE USED FOR THE DESIGN OF ALL NEW MAST ARM STRUCTURES, EXCEPT IN THE FOLLOWING SITUATIONS WHERE THE STRUCTURE SHALL REQUIRE A PROJECT-SPECIFIC DESIGN:
   - THE WIND LOADS OR DEAD LOADS ON THE MAST ARM STRUCTURE SPECIFIED ON THE PLANS WILL EXCEED WHAT IS SHOWN ON THIS STANDARD FOR THE PROPOSED ARM LENGTH.
   - THE STRUCTURE IS A DUAL ARM STRUCTURE WHERE THE ARMS ARE NOT AT 90 DEGREES TO EACH OTHER.
2. EMERGENCY VEHICLE PREEMPTION DEVICES, PEDESTRIAN PUSH BUTTONS, AND ANTENNAE SHALL BE CONSIDERED TO HAVE NEGLIGIBLE WEIGHT AND SURFACE AREA FOR THE PURPOSES OF STRUCTURAL DESIGN OF THE MAST ARM POLES AND FOUNDATIONS.
3. FOR DUAL MAST ARM STRUCTURES WITH TWO ARMS AT 90 DEGREES TO EACH OTHER, THE POLE AND FOUNDATION SHALL BE DESIGNED FOR THE WORST-CASE DEAD LOAD AND WIND LOAD CONDITIONS FROM EITHER ARM.
4. FOR THE PURPOSES OF WIND LOAD ANALYSIS, ALL LOADS SHALL BE TREATED AS IF THEY ARE POINTED IN THE SAME DIRECTION (FACING WIND). THERE SHALL BE NO DEDUCTIONS FOR DEVICES MOUNTED AT ANGLES.
5. THE AREAS PROVIDED DO NOT TAKE INTO ACCOUNT THE WIND DRAG COEFFICIENT.
6. UNLESS SPECIFIED OTHERWISE IN THE CONTRACT DOCUMENTS, EQUIPMENT LOADS AND SIZES SHOWN IN THIS STANDARD SHALL BE USED FOR THE STRUCTURE AND FOUNDATION DESIGN, EVEN IF LIGHTER LOADS OR SMALLER EQUIPMENT SIZES ARE PROPOSED.

DEVICE		SURFACE AREA (SEE NOTES 5 & 6)	DEAD LOAD (SEE NOTE 6)
	3-SECTION SIGNAL HEAD W/ BACKPLATE	8.7 SF	65 LBS
	4-SECTION SIGNAL HEAD W/ BACKPLATE	11.0 SF	80 LBS
	5-SECTION SIGNAL HEAD W/ BACKPLATE (IN-LINE)	13.4 SF	95 LBS
	5-SECTION SIGNAL HEAD W/ BACKPLATE (DOGHOUSE/CLUSTER)	13.75 SF	105 LBS
	SP-9 PEDESTRIAN SIGNAL HEAD	2.4 SF	30 LBS
Ⓐ	30" x 36" SIGN	7.5 SF	22.5 LBS
Ⓑ	36" x 42" SIGN	10.5 SF	26.7 LBS
Ⓒ	12' x 2.5' STREET NAME SIGN	30 SF	66 LBS
Ⓓ	15' x 2.5' STREET NAME SIGN	37.5 SF	88.5 LBS
	VIDEO CAMERA	1.00 SF	22 LBS

SPECIFICATION REFERENCE

700

A COPY OF THE ORIGINAL SEALED AND SIGNED DRAWING IS ON FILE IN THE CENTRAL OFFICE.

SIGNAL POLE DETAILS

MAST ARM SIGNAL POLE MAXIMUM LOADING STANDARDS

VIRGINIA DEPARTMENT OF TRANSPORTATION

VDOT

ROAD AND BRIDGE STANDARDS

REVISION DATE NEW 02/16

SHEET 2 OF 4

1302.25

MP-3

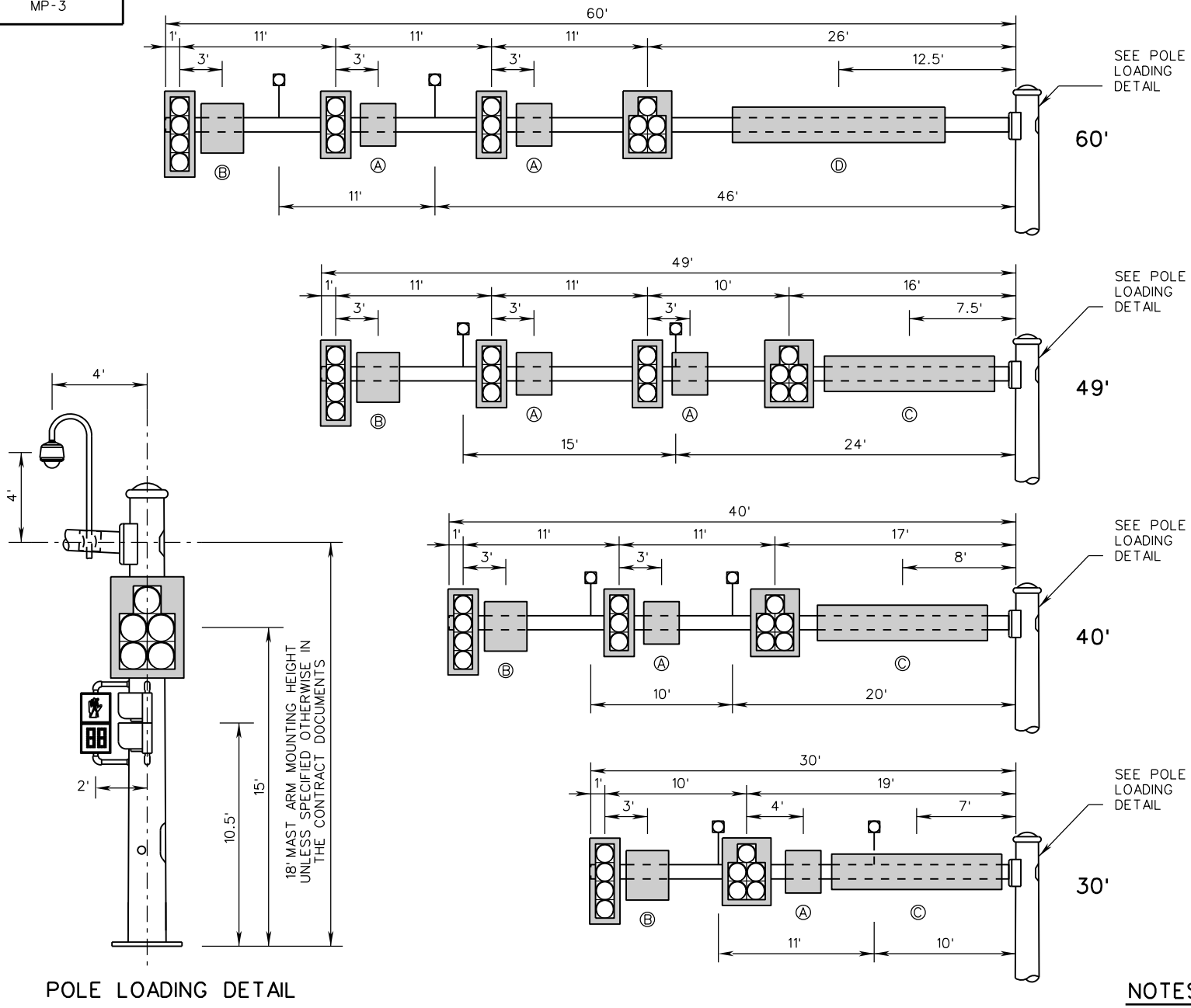

POLE LOADING DETAIL

NOTES:

SEE SHEET 2 FOR NOTES.

VDOT ROAD AND BRIDGE STANDARDS	A COPY OF THE ORIGINAL SEALED AND SIGNED DRAWING IS ON FILE IN THE CENTRAL OFFICE.	SPECIFICATION REFERENCE
SHEET 3 OF 4	SIGNAL POLE DETAILS	700
1302.26	MAST ARM SIGNAL POLE MAXIMUM LOADING STANDARDS	
REVISION DATE NEW 02/16	VIRGINIA DEPARTMENT OF TRANSPORTATION	

MP-3

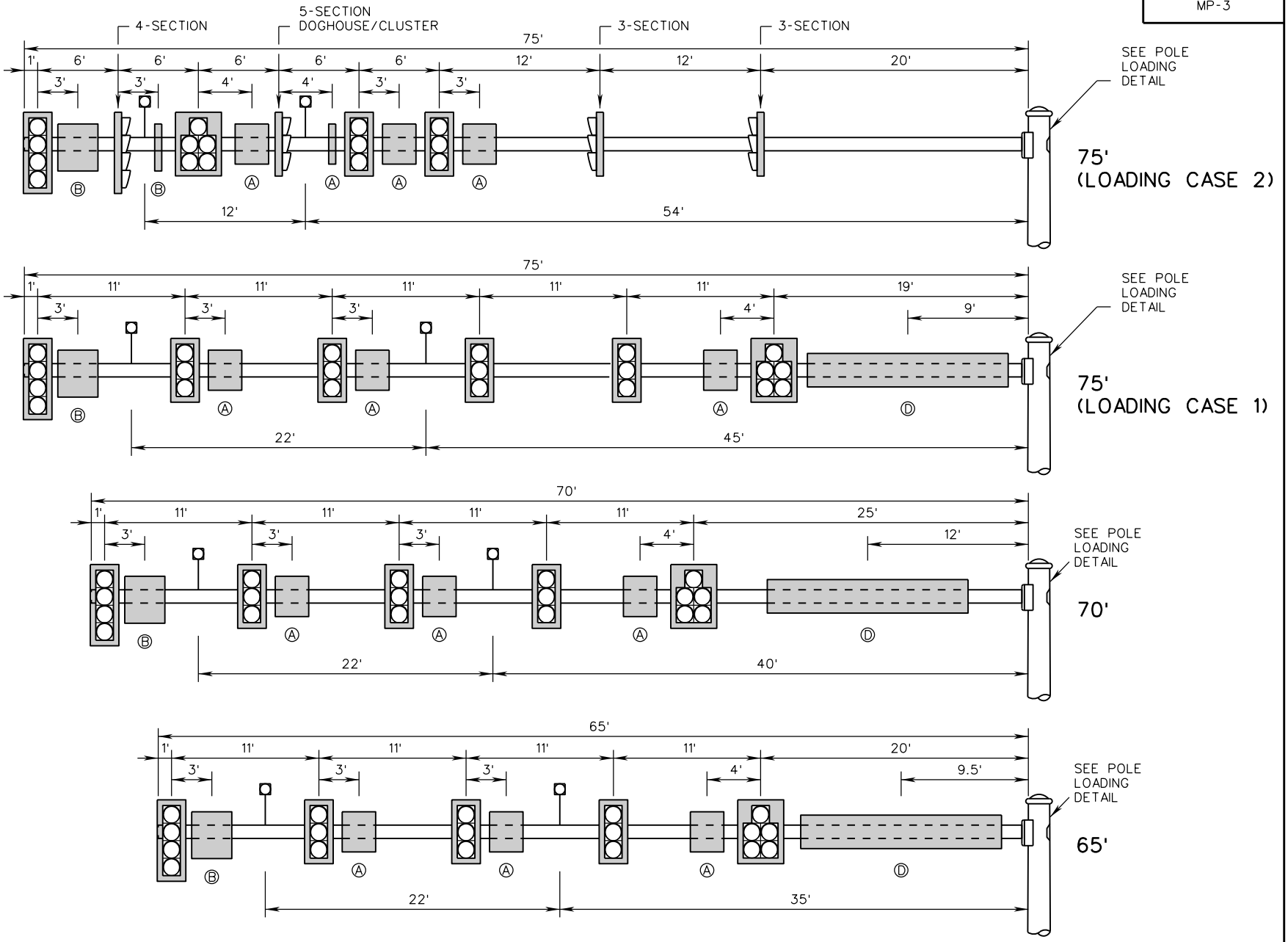

NOTES:

SEE SHEET 2 FOR NOTES.

SPECIFICATION REFERENCE	A COPY OF THE ORIGINAL SEALED AND SIGNED DRAWING IS ON FILE IN THE CENTRAL OFFICE.	VDOT ROAD AND BRIDGE STANDARDS	
700	SIGNAL POLE DETAILS MAST ARM SIGNAL POLE MAXIMUM LOADING STANDARDS VIRGINIA DEPARTMENT OF TRANSPORTATION	REVISION DATE 08/17	SHEET 4 OF 4 1302.27

PF-2

NOTES:

1. THIS STANDARD SHALL ONLY BE USED TO SUPPORT VEHICULAR AND PEDESTRIAN SIGNAL HEADS, PUSH BUTTONS, AND/OR SIGNS 36" IN WIDTH OR LESS, INCLUDING DIAMOND WARNING SIGNS WITH 36" OR LESS EDGE LENGTH.
2. EACH FOUNDATION SHALL BE PERMANENTLY MARKED TO INDICATE ALL SIDES FROM WHICH CONDUITS PASS. THIS MARK SHALL BE MADE WITH A TROWEL WHEN FINISHING THE CONCRETE AND SHALL BE 1/4" DEEP AND 4" TO 6" LONG.
3. PEDESTAL POLE SHALL HAVE A BREAKAWAY TRANSFORMER TYPE BASE. THE TRANSFORMER BASE SHALL BE INSTALLED PER THE MANUFACTURER'S INSTALLATION INSTRUCTIONS.
4. SEE PEDESTRIAN ACTUATION STANDARDS FOR DETAILS.
5. PEDESTAL POLE LENGTH SHALL BE AS SPECIFIED IN THE CONTRACT DOCUMENTS. PEDESTAL POLE LENGTH SHALL NOT EXCEED 15 FEET.
6. MOUNTING HEIGHT SHALL BE AS SPECIFIED IN THE CONTRACT DOCUMENTS.
7. STRUCTURAL TUBE MATERIAL SHALL BE ALUMINUM 6061-T6 WITH MINIMUM 0.337" WALL THICKNESS.

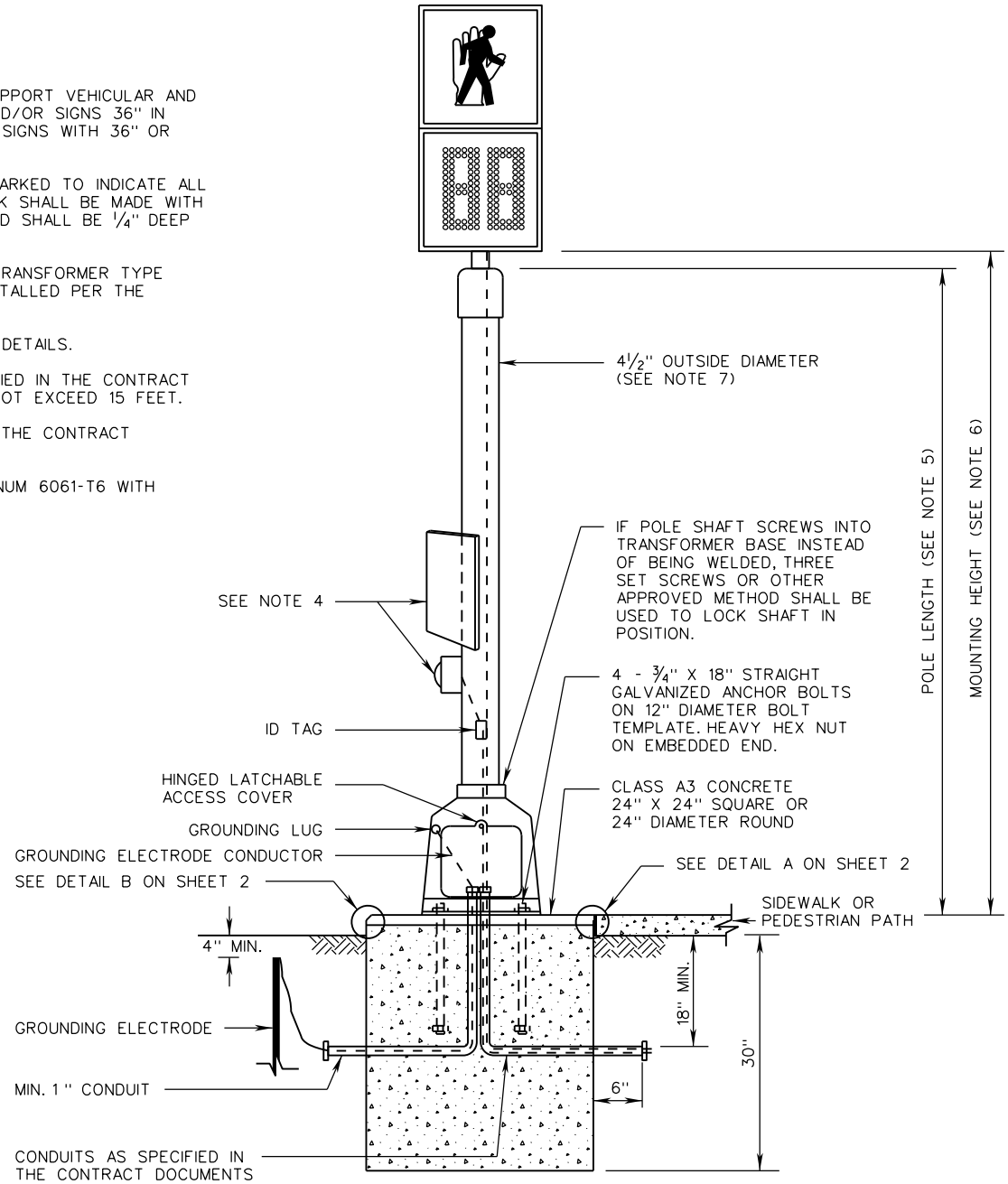

A COPY OF THE ORIGINAL SEALED AND SIGNED DRAWING IS ON FILE IN THE CENTRAL OFFICE.

VDOT ROAD AND BRIDGE STANDARDS	PEDESTAL POLE AND FOUNDATION DETAILS	SPECIFICATION REFERENCE
SHEET 1 OF 2	VIRGINIA DEPARTMENT OF TRANSPORTATION	700
1302.30	REVISION DATE 07/16	

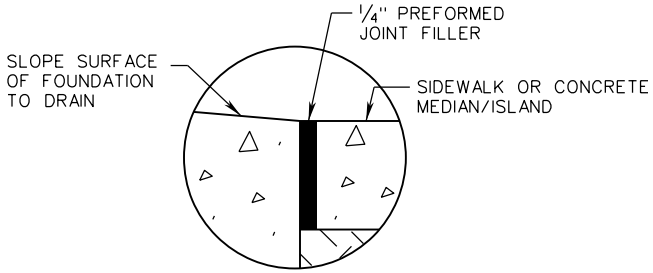

DETAIL A
SIDEWALK OR CONCRETE MEDIAN/ISLAND

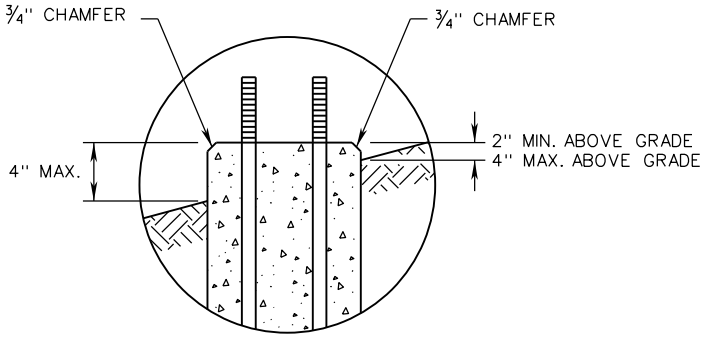

DETAIL B
BREAKAWAY BASE

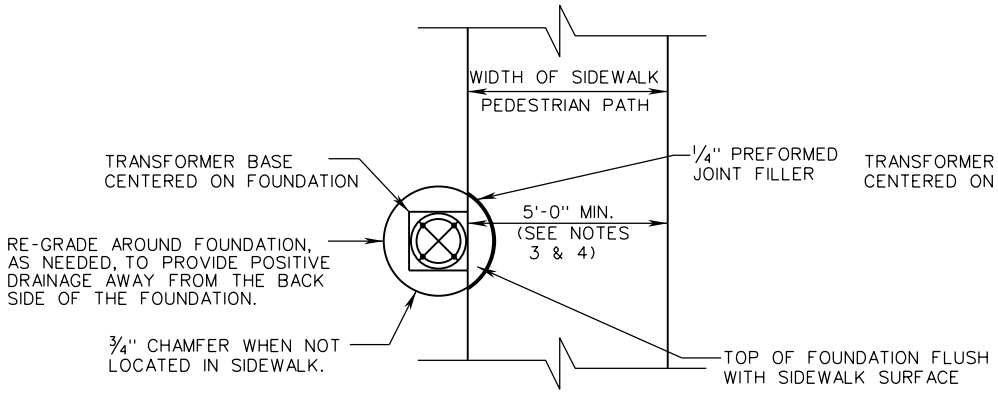

DETAIL A PLAN VIEW
AT SIDEWALK / PEDESTRIAN PATH

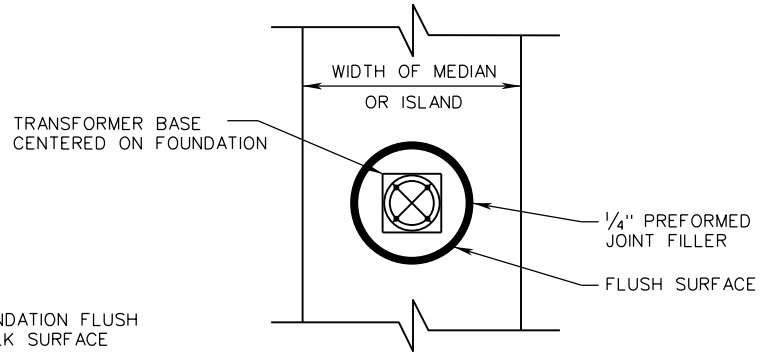

PLAN VIEW
OF DETAIL A
AT CONCRETE MEDIAN/ISLAND

NOTES:

1. WHEN FOUNDATION IS ADJACENT TO THE BACK EDGE OF SIDEWALK BUT NOT WITHIN THE SIDEWALK, THE TOP OF THE FOUNDATION SHALL BE ELEVATED 2 INCHES MINIMUM ABOVE THE SIDEWALK GRADE.
2. ROUND FOUNDATIONS ARE SHOWN, HOWEVER SQUARE FOUNDATIONS ARE ACCEPTABLE AND SHALL FOLLOW THE SAME REQUIREMENTS.
3. THE TOP OF FOUNDATION SHALL BE FLUSH WITH THE SIDEWALK SURFACE WHEN INCLUDED IN THE 5'-0" MINIMUM SIDEWALK/ PEDESTRIAN PATH.
4. THE 5'-0" MINIMUM SIDEWALK/ PEDESTRIAN PATH WIDTH WILL BE MEASURED FROM THE BOTTOM OF THE TRANSFORMER BASE.

SPECIFICATION REFERENCE	A COPY OF THE ORIGINAL SEALED AND SIGNED DRAWING IS ON FILE IN THE CENTRAL OFFICE.	VDOT ROAD AND BRIDGE STANDARDS	
700	PEDESTAL POLE AND FOUNDATION INSTALLATION DETAILS VIRGINIA DEPARTMENT OF TRANSPORTATION	REVISION DATE 09/18	SHEET 2 OF 2 1302.31

STANDARD

THIS PAGE INTENTIONALLY LEFT BLANK

VDOT
ROAD AND BRIDGE STANDARDS

SHEET 1 OF 1

REVISION DATE

TITLE

VIRGINIA DEPARTMENT OF TRANSPORTATION

SPECIFICATION REFERENCE

HH-1

NOTES:

1. HANDHOLES AT LOCATIONS NOT SHOWN SHALL BE 3" X 5" MINIMUM.
2. HANDHOLES WITHIN 10 FEET OF THE GROUND LINE SHALL BE HINGED AND LATCHABLE, WITH AN APPROVED LATCHING MECHANISM.

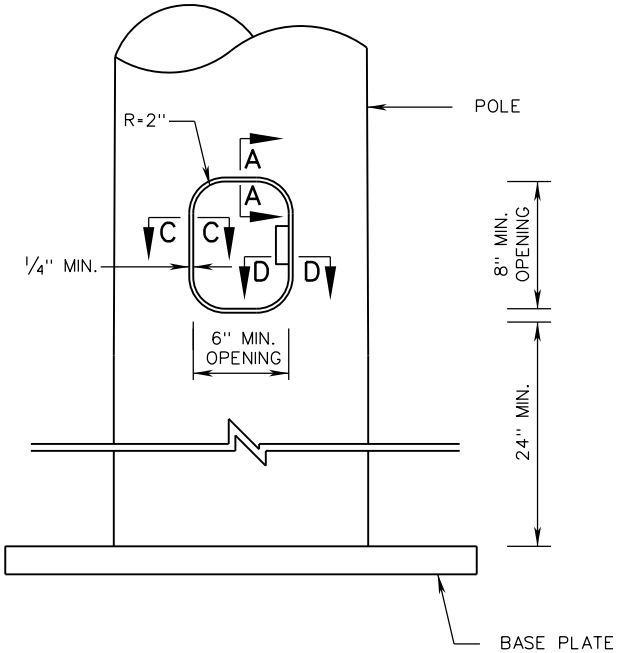

SIGNAL POLE / SIGN STRUCTURE ELEVATION VIEW

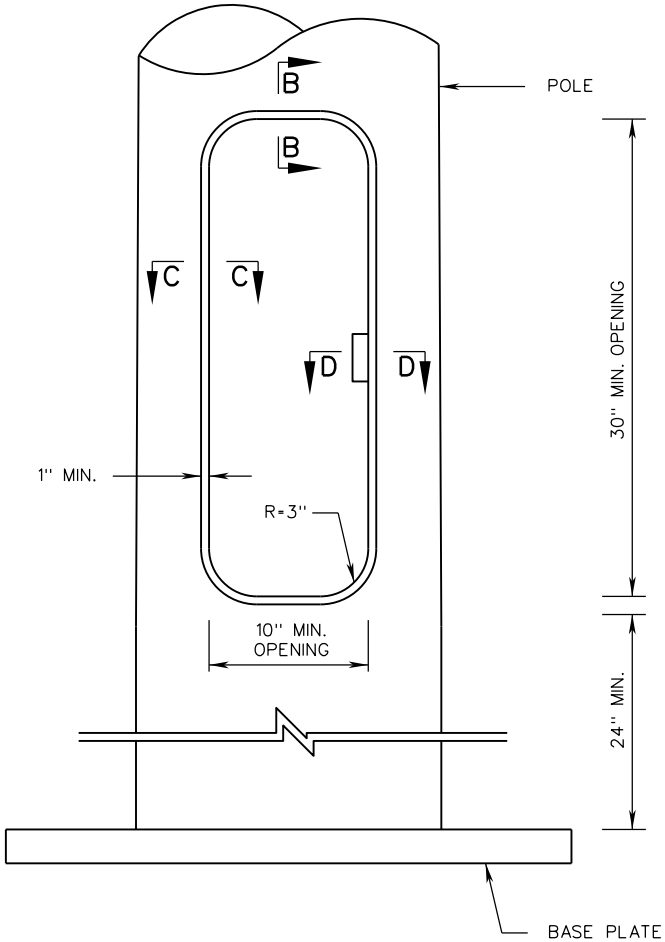

HIGH MAST LIGHT POLE ELEVATION VIEW

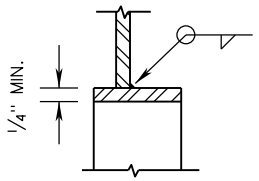

SECTION A-A

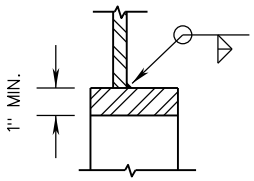

SECTION B-B

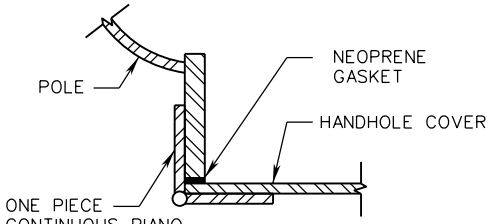

SECTION C-C

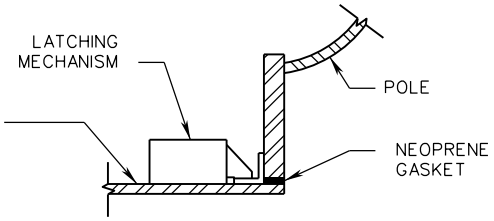

SECTION D-D

A COPY OF THE ORIGINAL SEALED AND SIGNED DRAWING IS ON FILE IN THE CENTRAL OFFICE.

SPECIFICATION REFERENCE	HANDHOLE DETAILS	VDOT ROAD AND BRIDGE STANDARDS	
700	VIRGINIA DEPARTMENT OF TRANSPORTATION	REVISION DATE NEW 07/16	SHEET 1 OF 1
			1302.40

AB-1

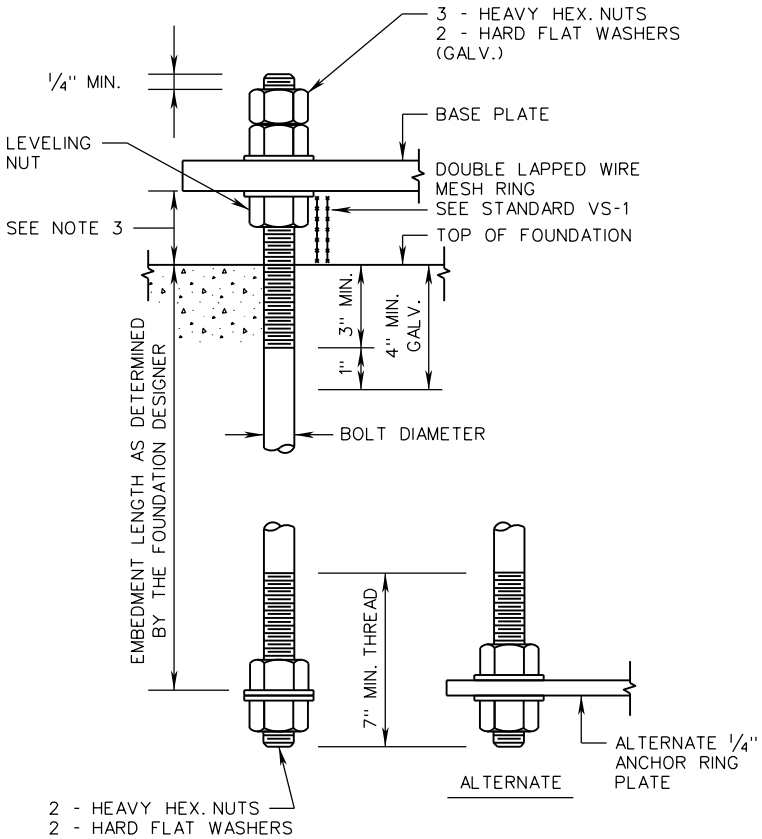

ANCHOR BOLT DETAIL

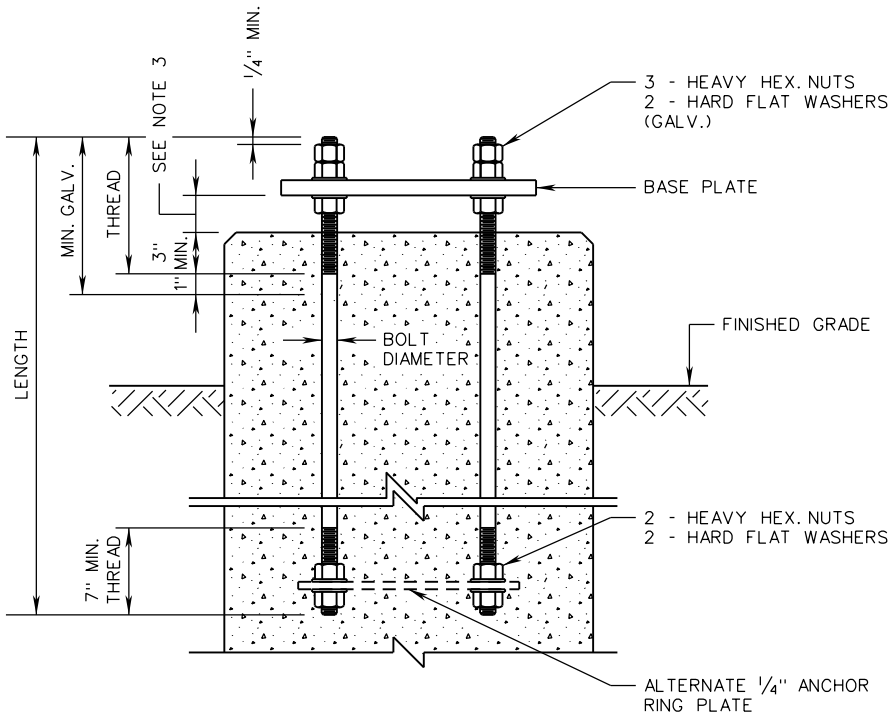

ANCHORAGE DETAIL

NOTES:

1. PROVIDE 5 NUTS AND 4 WASHERS PER ANCHOR BOLT. SEE SPECIFICATIONS FOR NUT INSTALLATION PROCEDURE.
2. CONDUITS AND REINFORCING STEEL NOT SHOWN FOR CLARITY.
3. DISTANCE BETWEEN BOTTOM OF BASE PLATE AND TOP OF FOUNDATION SHALL BE NO GREATER THAN THE DIAMETER OF ANCHOR BOLT PLUS ONE INCH.
4. THIS STANDARD DOES NOT APPLY TO STRUCTURES MOUNTED ATOP TRANSFORMER BASES.

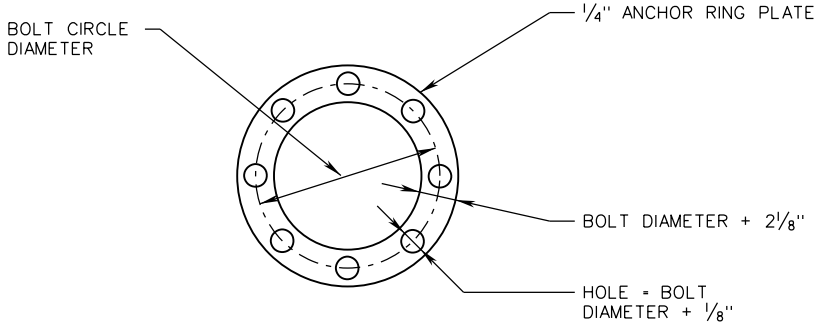

ALTERNATE ANCHOR RING PLATE DETAIL

VDOT ROAD AND BRIDGE STANDARDS	A COPY OF THE ORIGINAL SEALED AND SIGNED DRAWING IS ON FILE IN THE CENTRAL OFFICE.		SPECIFICATION REFERENCE
SHEET 1 OF 1	ANCHOR BOLTS		700
1302.50	INSTALLATION DETAILS	REVISION DATE 08/17	
	VIRGINIA DEPARTMENT OF TRANSPORTATION		

VS-1

NOTES:

1. WIRE MESH RING SHALL BE 1/8" WOVEN HARDWARE CLOTH 27 GAGE (COMMERCIAL GRADE) HOT DIPPED GALVANIZED. DOUBLE LAP MESH AND SECURE WITH PLASTIC COATED WIRE TWIST TIES. LENGTH AND HEIGHT DETERMINED BY FIELD MEASUREMENTS.
2. WIRE MESH RING SHALL BE PLACED INSIDE THE BOLT CIRCLE BEFORE THE POLE IS ERECTED AND PLUMBED.
3. WIRE MESH RING SHALL BE COMPRESSED BETWEEN POLE BASE PLATE, CONCRETE FOUNDATION, AND BOLTS. ENSURE THE WIRE MESH RING WILL REMAIN IN PLACE AND ANY ACCESS THROUGH THE POLE BASE PLATE OPENING IS ELIMINATED.
4. WELDING OR DRILLING IS NOT PERMITTED ON BASE PLATE OF POLE.
5. CONDUITS NOT SHOWN FOR CLARITY.
6. THIS STANDARD DOES NOT APPLY TO STRUCTURES MOUNTED ATOP TRANSFORMER BASES.

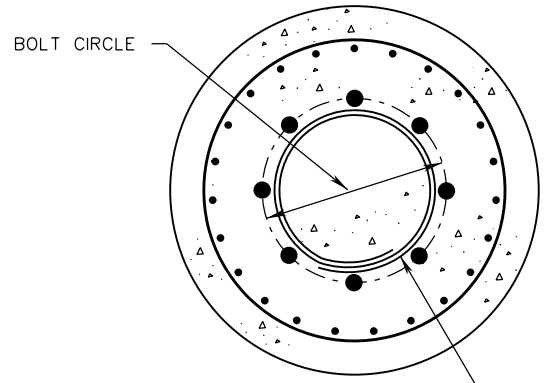

PLAN VIEW

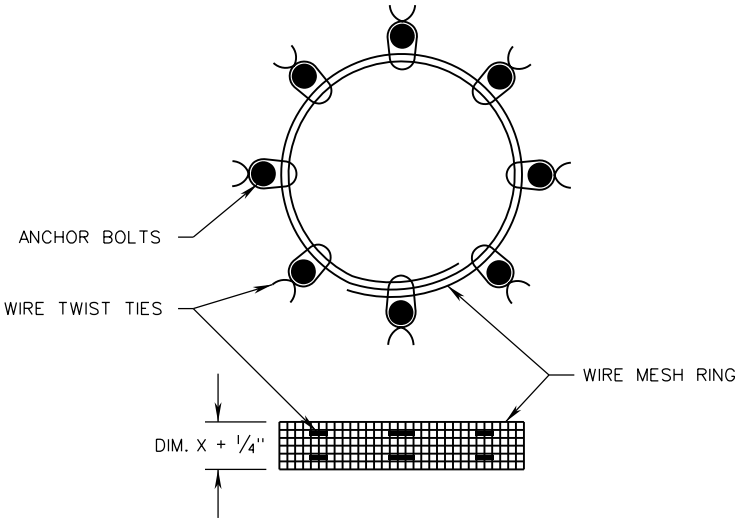

DETAIL A

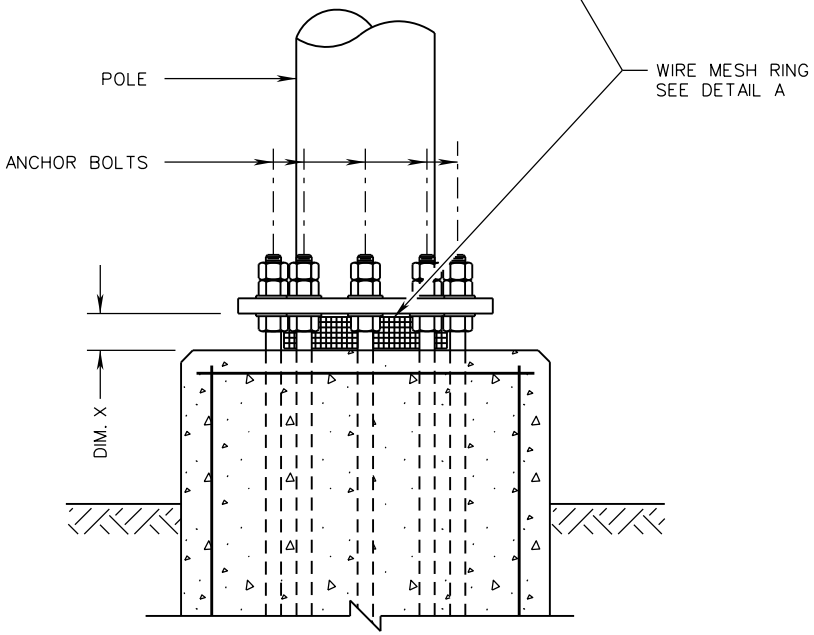

VENTED VARMINT SCREEN

SPECIFICATION REFERENCE	A COPY OF THE ORIGINAL SEALED AND SIGNED DRAWING IS ON FILE IN THE CENTRAL OFFICE.	VDOT ROAD AND BRIDGE STANDARDS
700	VENTED VARMINT SCREEN DETAILS VIRGINIA DEPARTMENT OF TRANSPORTATION	REVISION DATE 08/17 — SHEET 1 OF 1 — 1302.60

STANDARD

THIS PAGE INTENTIONALLY LEFT BLANK

VDOT
ROAD AND BRIDGE STANDARDS

SHEET 1 OF 1

REVISION DATE

TITLE

VIRGINIA DEPARTMENT OF TRANSPORTATION

SPECIFICATION REFERENCE

SW-1

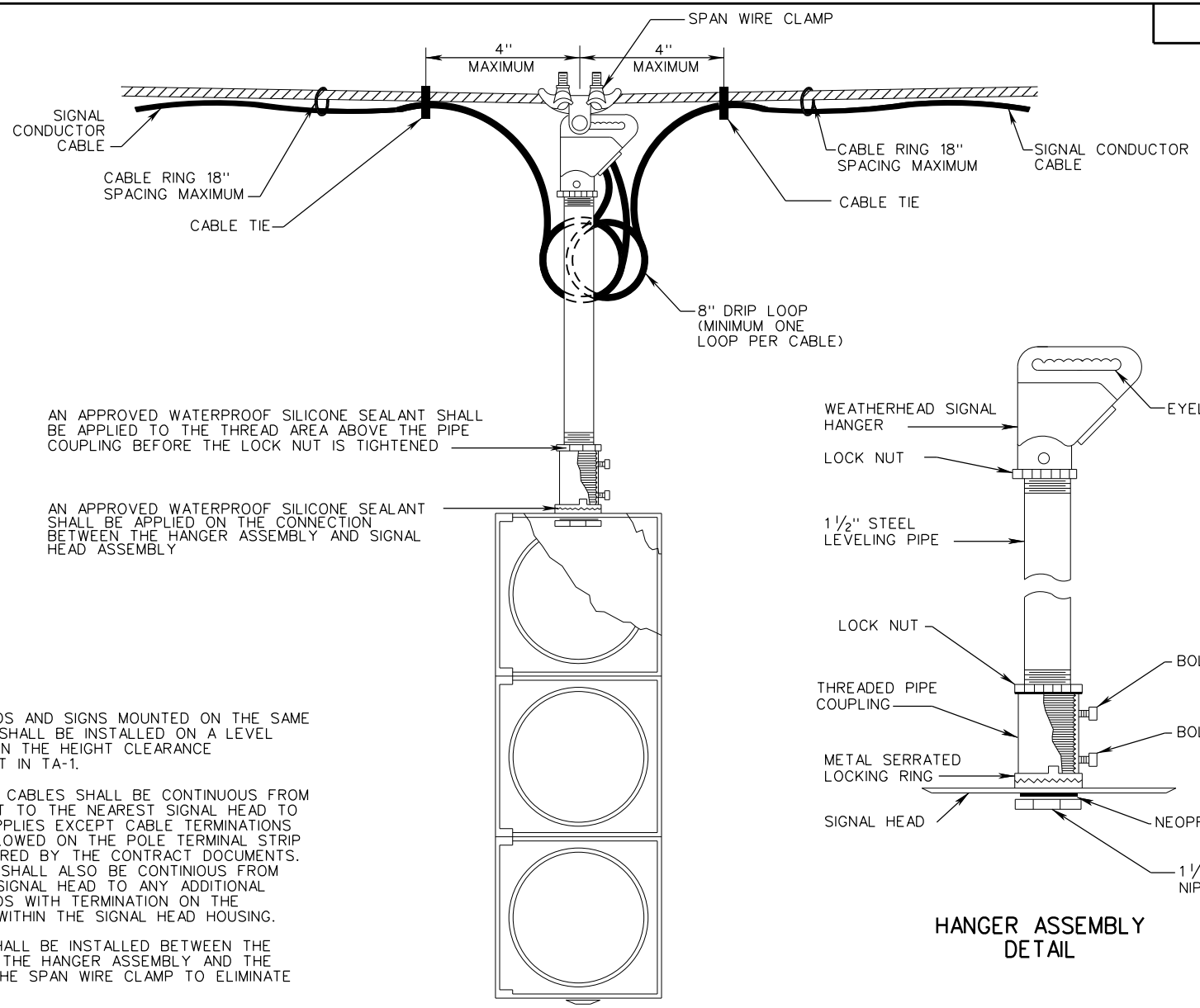

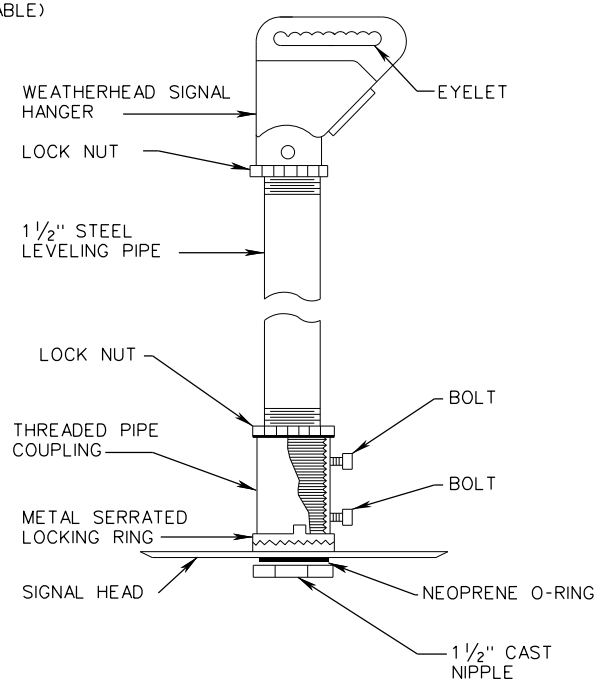

HANGER ASSEMBLY DETAIL

NOTES:

1. SIGNAL HEADS AND SIGNS MOUNTED ON THE SAME SPAN WIRE SHALL BE INSTALLED ON A LEVEL PLANE WITHIN THE HEIGHT CLEARANCE REQUIREMENT IN TA-1.
2. CONDUCTOR CABLES SHALL BE CONTINUOUS FROM THE CABINET TO THE NEAREST SIGNAL HEAD TO WHICH IT APPLIES EXCEPT CABLE TERMINATIONS MAY BE ALLOWED ON THE POLE TERMINAL STRIP WHEN REQUIRED BY THE CONTRACT DOCUMENTS. THE CABLE SHALL ALSO BE CONTINIOUS FROM THE FIRST SIGNAL HEAD TO ANY ADDITIONAL SIGNAL HEADS WITH TERMINATION ON THE TERMINALS WITHIN THE SIGNAL HEAD HOUSING.
3. SPACERS SHALL BE INSTALLED BETWEEN THE EYELET OF THE HANGER ASSEMBLY AND THE INSIDE OF THE SPAN WIRE CLAMP TO ELIMINATE ANY GAP.
4. BACKPLATES INTENTIONALLY NOT SHOWN SO EQUIPMENT DETAIL COULD BE SHOWN MORE CLEARLY.
5. SEE TA-1 FOR TETHER WIRE AND CLAMP DETAILS.

SPECIFICATION REFERENCE	A COPY OF THE ORIGINAL SEALED AND SIGNED DRAWING IS ON FILE IN THE CENTRAL OFFICE.	VDOT ROAD AND BRIDGE STANDARDS	
703	SIGNAL HEAD MOUNTING DETAILS SPAN WIRE VIRGINIA DEPARTMENT OF TRANSPORTATION	REVISION DATE 02/16	SHEET 1 OF 1 1303.10

SW-2

NOTES:

1. SIGNAL HEADS AND SIGNS MOUNTED ON THE SAME SPAN WIRE SHALL BE INSTALLED ON A LEVEL PLANE WITHIN THE HEIGHT CLEARANCE REQUIREMENT IN TA-1.
2. CONDUCTOR CABLES SHALL BE CONTINUOUS FROM THE CABINET TO THE NEAREST SIGNAL HEAD TO WHICH IT APPLIES EXCEPT CABLE TERMINATIONS MAY BE ALLOWED ON THE POLE TERMINAL STRIP WHEN REQUIRED BY THE CONTRACT DOCUMENTS. THE CABLE SHALL ALSO BE CONTINUOUS FROM THE FIRST SIGNAL HEAD TO ANY ADDITIONAL SIGNAL HEADS WITH TERMINATION ON THE TERMINALS WITHIN THE SIGNAL HEAD HOUSING.
3. SPACERS SHALL BE INSTALLED BETWEEN THE EYELET OF THE HANGER ASSEMBLY AND THE INSIDE OF THE SPAN WIRE CLAMP TO ELIMINATE ANY GAP.
4. BACKPLATES INTENTIONALLY NOT SHOWN SO EQUIPMENT DETAIL COULD BE SHOWN MORE CLEARLY.
5. SEE TA-1 FOR TETHER WIRE AND CLAMP DETAILS.

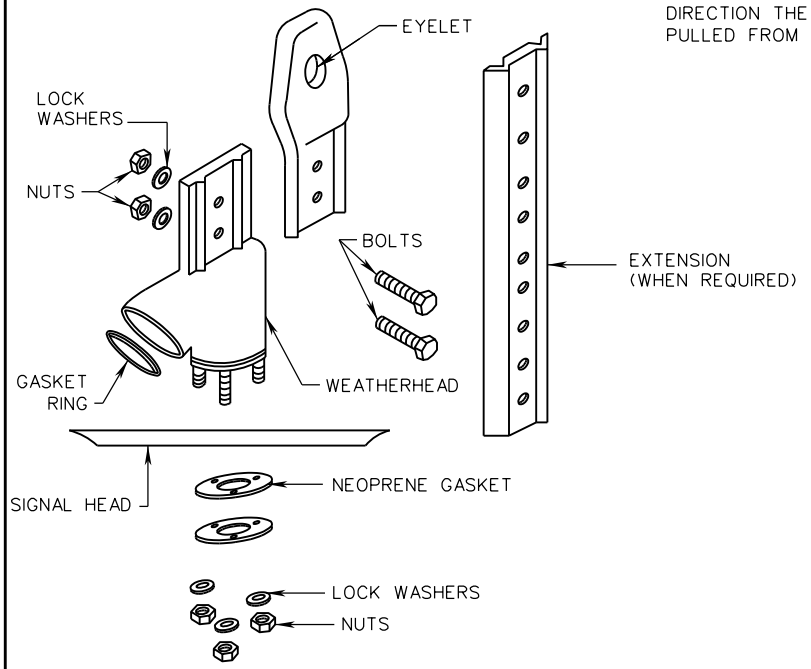

HANGER ASSEMBLY DETAILS

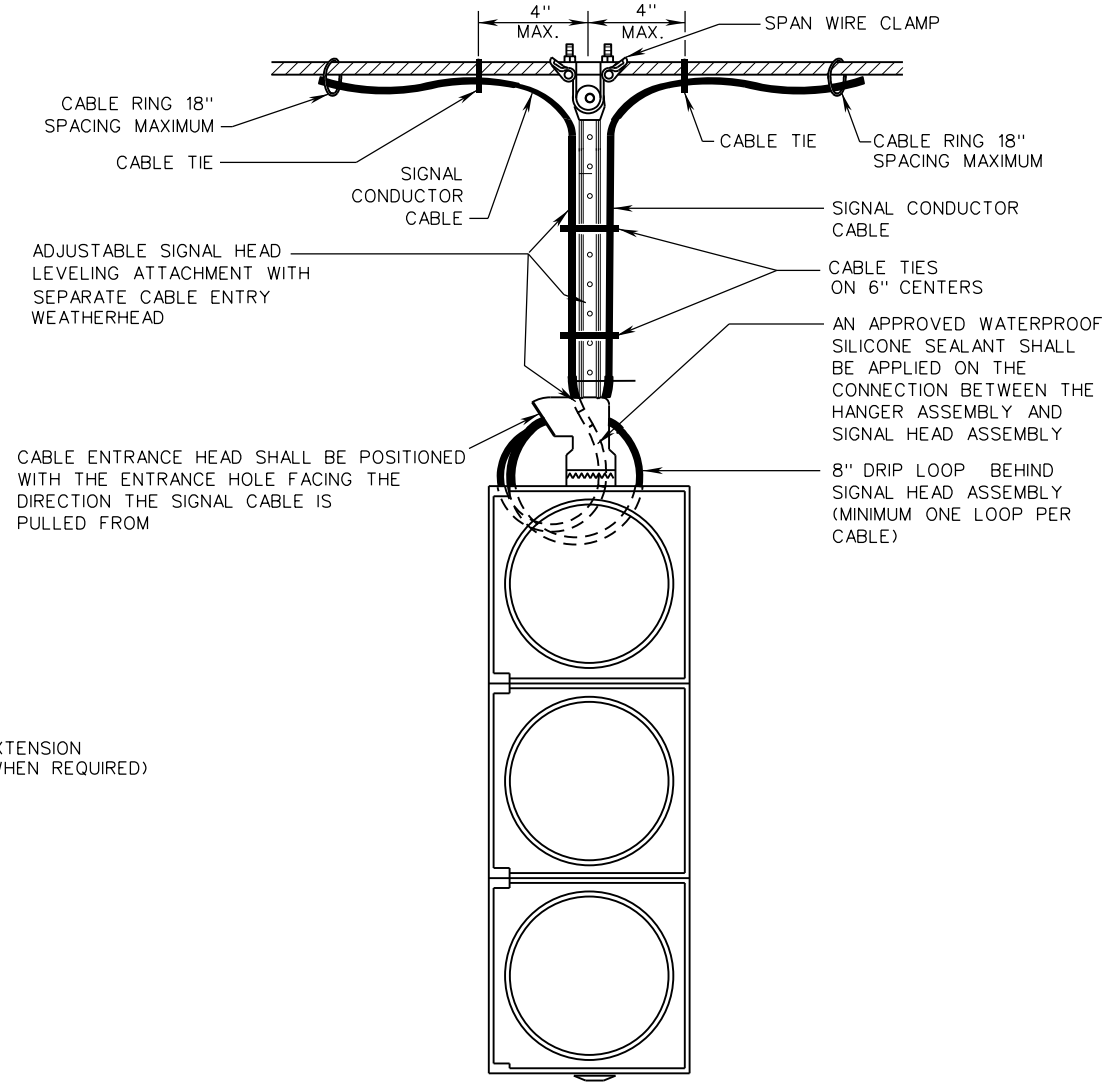

VDOT ROAD AND BRIDGE STANDARDS	A COPY OF THE ORIGINAL SEALED AND SIGNED DRAWING IS ON FILE IN THE CENTRAL OFFICE.	SPECIFICATION REFERENCE
SHEET 1 OF 1	SIGNAL HEAD MOUNTING DETAILS SPAN WIRE	703
1303.20 / REVISION DATE 02/16	VIRGINIA DEPARTMENT OF TRANSPORTATION	

SM-3

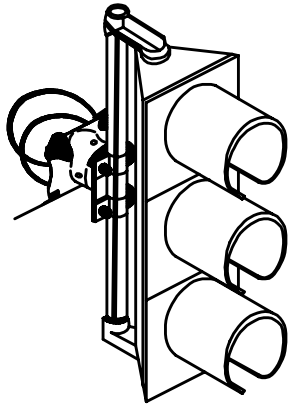

NOTES:

SIGNAL HEAD CABLES SHALL BE CONTINUOUS FROM THE CONTROLLER TO THE NEAREST SIGNAL HEAD TO WHICH IT APPLIES EXCEPT CABLE TERMINATIONS MAY BE ALLOWED ON THE POLE TERMINAL STRIP WHEN REQUIRED BY THE PLANS. THE CABLE SHALL ALSO BE CONTINUOUS FROM THE FIRST SIGNAL HEAD TO ANY ADDITIONAL HEADS WITH TERMINATION ON THE TERMINALS WITHIN THE SIGNAL HEAD HOUSING.

POLE AND HANGER ASSEMBLY HARDWARE REQUIREMENTS

POLE TYPE	HARDWARE TYPE
GALVANIZED STEEL	ALUMINUM OR GALVANIZED IRON
STEEL PAINTED ALUMINUM	ALUMINUM, GALVANIZED IRON OR IRON PAINTED ALUMINUM
STEEL PAINTED OTHER THAN ALUMINUM	ALUMINUM OR IRON PAINTED TO MATCH POLE

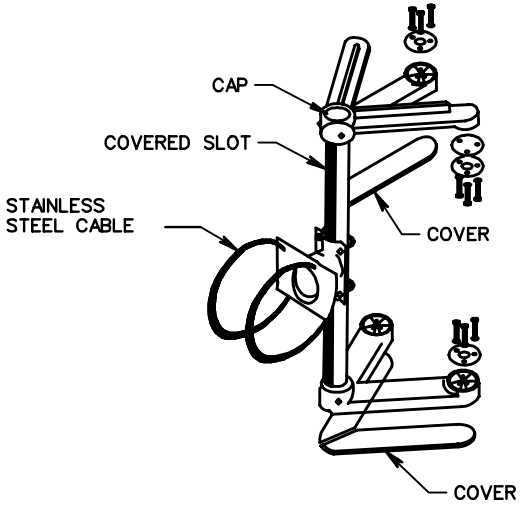

5 SECTION CLUSTER MOUNTING DETAIL

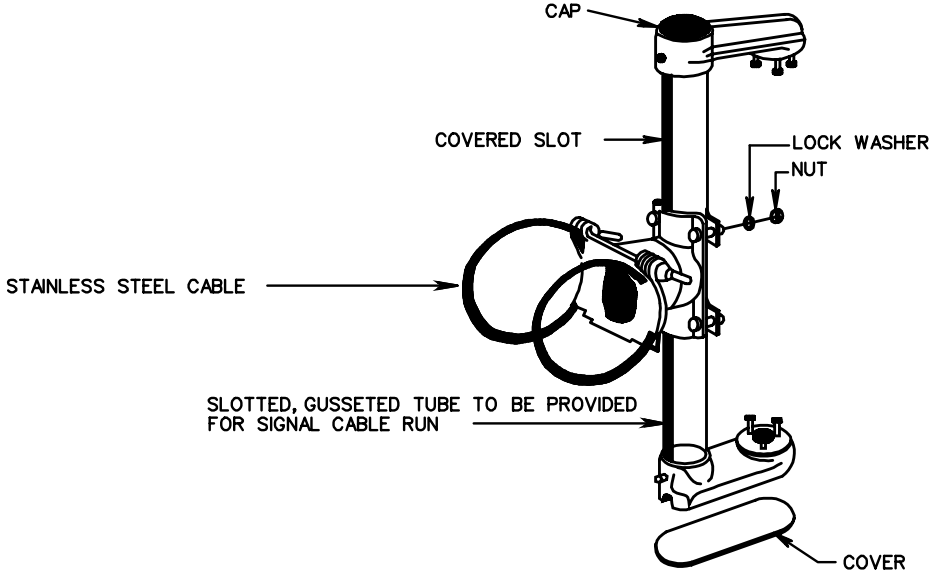

RIGID MAST ARM MOUNTING DETAILS

SPECIFICATION REFERENCE	SIGNAL HEAD MOUNTING DETAILS MAST ARM VIRGINIA DEPARTMENT OF TRANSPORTATION	VDOT ROAD AND BRIDGE STANDARDS
703		REVISION DATE / SHEET 1 OF 1 / 1303.30

SMB-1

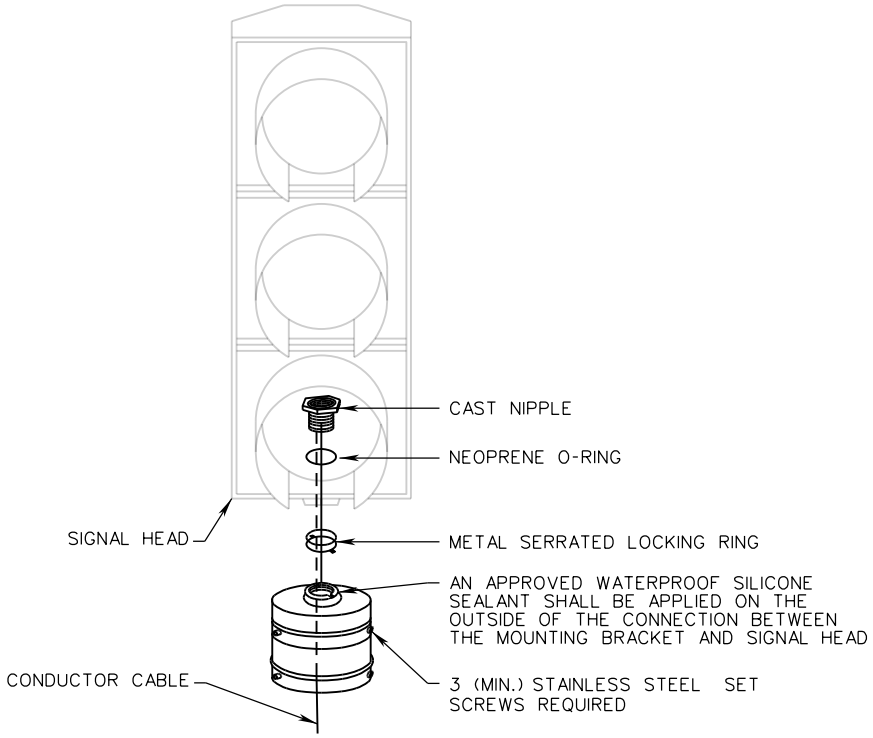

4 1/2" POLE ADAPTOR FOR PF-2 PEDESTAL

POLE TOP MOUNTING CAST ALUMINUM SIGNAL HEADS ONLY

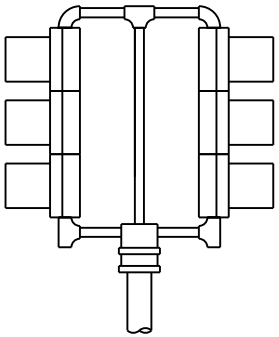

MULTI-WAY MOUNTING DETAIL

NOTES:

1. IF PEDESTRIAN SIGNAL HEADS ARE BEING INSTALLED, THE MOUNTING ATTACHMENTS SHALL BE A TYPE SPECIFICALLY MANUFACTURED FOR THAT PURPOSE.
2. MOUNTING BRACKETS SHOWN ARE TYPICAL AND FOR ONE-WAY AND MULTI-WAY SIGNAL DISPLAYS.
3. BACKPLATES INTENTIONALLY NOT SHOWN SO EQUIPMENT DETAIL COULD BE SHOWN MORE CLEARLY.
4. SIGNAL HEADS MAY BE MOUNTED USING TRI-STUD ASSEMBLIES INSTEAD OF THE CAST NIPPLE ASSEMBLIES.

VDOT ROAD AND BRIDGE STANDARDS	A COPY OF THE ORIGINAL SEALED AND SIGNED DRAWING IS ON FILE IN THE CENTRAL OFFICE.		SPECIFICATION REFERENCE
SHEET 1 OF 1	SIGNAL HEAD MOUNTING DETAILS		703
1303.40	POLE TOP	REVISION DATE 02/16	
	VIRGINIA DEPARTMENT OF TRANSPORTATION		

STANDARD

THIS PAGE INTENTIONALLY LEFT BLANK

SPECIFICATION REFERENCE	TITLE VIRGINIA DEPARTMENT OF TRANSPORTATION	VDOT ROAD AND BRIDGE STANDARDS REVISION DATE	SHEET 1 OF 1 ____._

SMB-2

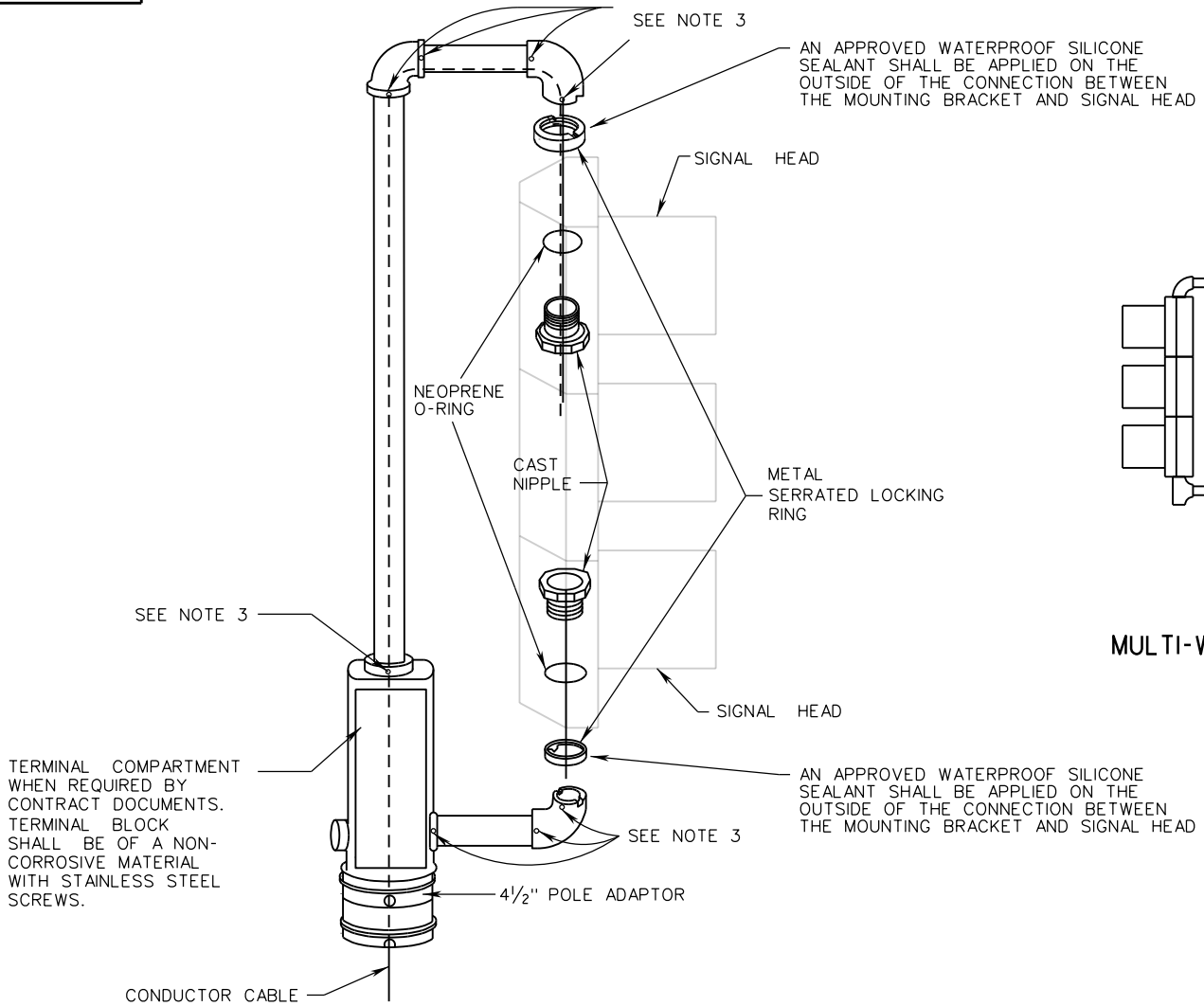

POLE TOP MOUNTING CAST ALUMINUM OR POLYCARBONATE SIGNAL HEADS

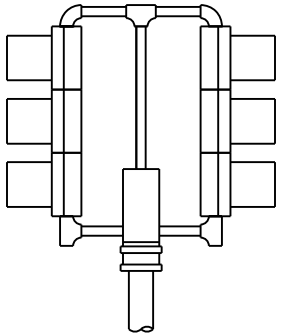

MULTI-WAY MOUNTING DETAIL

NOTES:

1. IF PEDESTRIAN SIGNAL HEADS ARE BEING INSTALLED, THE MOUNTING ATTACHMENTS SHALL BE A TYPE SPECIFICALLY MANUFACTURED FOR THAT PURPOSE.
2. MOUNTING BRACKETS SHOWN ARE TYPICAL AND FOR ONE-WAY AND MULTI-WAY SIGNAL DISPLAYS.
3. SET SCREWS SHALL BE STAINLESS STEEL.
4. SIGNAL HEADS MAY BE MOUNTED USING TRI-STUD ASSEMBLIES INSTEAD OF THE CAST NIPPLE ASSEMBLIES.

VDOT ROAD AND BRIDGE STANDARDS	A COPY OF THE ORIGINAL SEALED AND SIGNED DRAWING IS ON FILE IN THE CENTRAL OFFICE.		SPECIFICATION REFERENCE
SHEET 1 OF 1	SIGNAL HEAD MOUNTING DETAILS		703
1303.41	POLE TOP WITH TERMINAL COMPARTMENT AND BRACKET	REVISION DATE NEW 02/16	
	VIRGINIA DEPARTMENT OF TRANSPORTATION		

STANDARD

THIS PAGE INTENTIONALLY LEFT BLANK

SPECIFICATION REFERENCE	TITLE VIRGINIA DEPARTMENT OF TRANSPORTATION	VDOT ROAD AND BRIDGE STANDARDS REVISION DATE	SHEET 1 OF 1 ____._

SMB-3

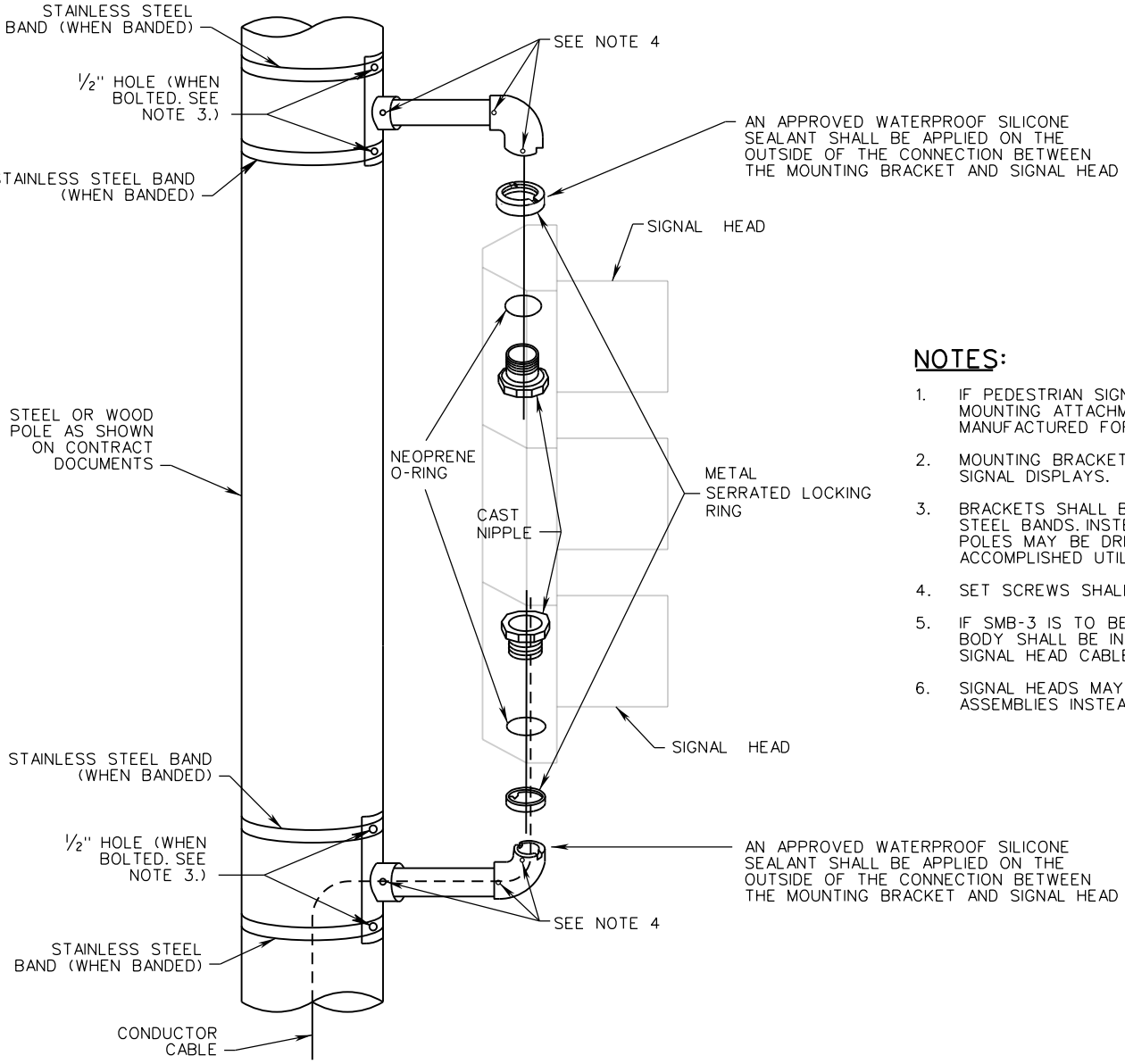

POLE BRACKET MOUNTING CAST ALUMINUM OR POLYCARBONATE SIGNAL HEADS

NOTES:

1. IF PEDESTRIAN SIGNAL HEADS ARE BEING INSTALLED, THE MOUNTING ATTACHMENTS SHALL BE A TYPE SPECIFICALLY MANUFACTURED FOR THAT PURPOSE.
2. MOUNTING BRACKET SHOWN IS TYPICAL AND FOR ONE-WAY SIGNAL DISPLAYS.
3. BRACKETS SHALL BE MOUNTED TO POLE WITH STAINLESS STEEL BANDS. INSTEAD OF STAINLESS STEEL BANDS, STEEL POLES MAY BE DRILLED AND TAPPED AND MOUNTING ACCOMPLISHED UTILIZING ½" STAINLESS STEEL BOLTS.
4. SET SCREWS SHALL BE STAINLESS STEEL.
5. IF SMB-3 IS TO BE MOUNTED ON WOOD POLE A CONDUIT BODY SHALL BE INSTALLED IN BRACKET ARM TO CONNECT SIGNAL HEAD CABLE CONDUIT.
6. SIGNAL HEADS MAY BE MOUNTED USING TRI-STUD ASSEMBLIES INSTEAD OF THE CAST NIPPLE ASSEMBLIES.

VDOT ROAD AND BRIDGE STANDARDS	A COPY OF THE ORIGINAL SEALED AND SIGNED DRAWING IS ON FILE IN THE CENTRAL OFFICE.		SPECIFICATION REFERENCE
SHEET 1 OF 1	SIGNAL HEAD MOUNTING DETAILS	REVISION DATE	703
1303.42	POLE SIDE MOUNTING BRACKET	NEW 02/16	
	VIRGINIA DEPARTMENT OF TRANSPORTATION		

TA-1

NOTES:

1. WIRING AND RIGGING SHALL BE IN ACCORDANCE WITH STANDARD WD-1 AND WD-2.
2. REFER TO STANDARD SMD-1 FOR SIGN PANEL ATTACHMENT DETAIL.
3. AFTER THE LOADS ARE APPLIED, THE VERTICAL CLEARANCE FROM THE HIGHEST POINT OF THE PAVEMENT SURFACE SHALL BE:
   A. 16' MINIMUM (15' MINIMUM FOR MAINTENANCE ACTIVITIES) TO THE LOWEST POINT OF THE SIGNAL HEAD ASSEMBLY (INCLUDING BACKPLATE) AND SIGNS.
   B. 25' MAXIMUM TO THE TOP OF THE SIGNAL HOUSING.

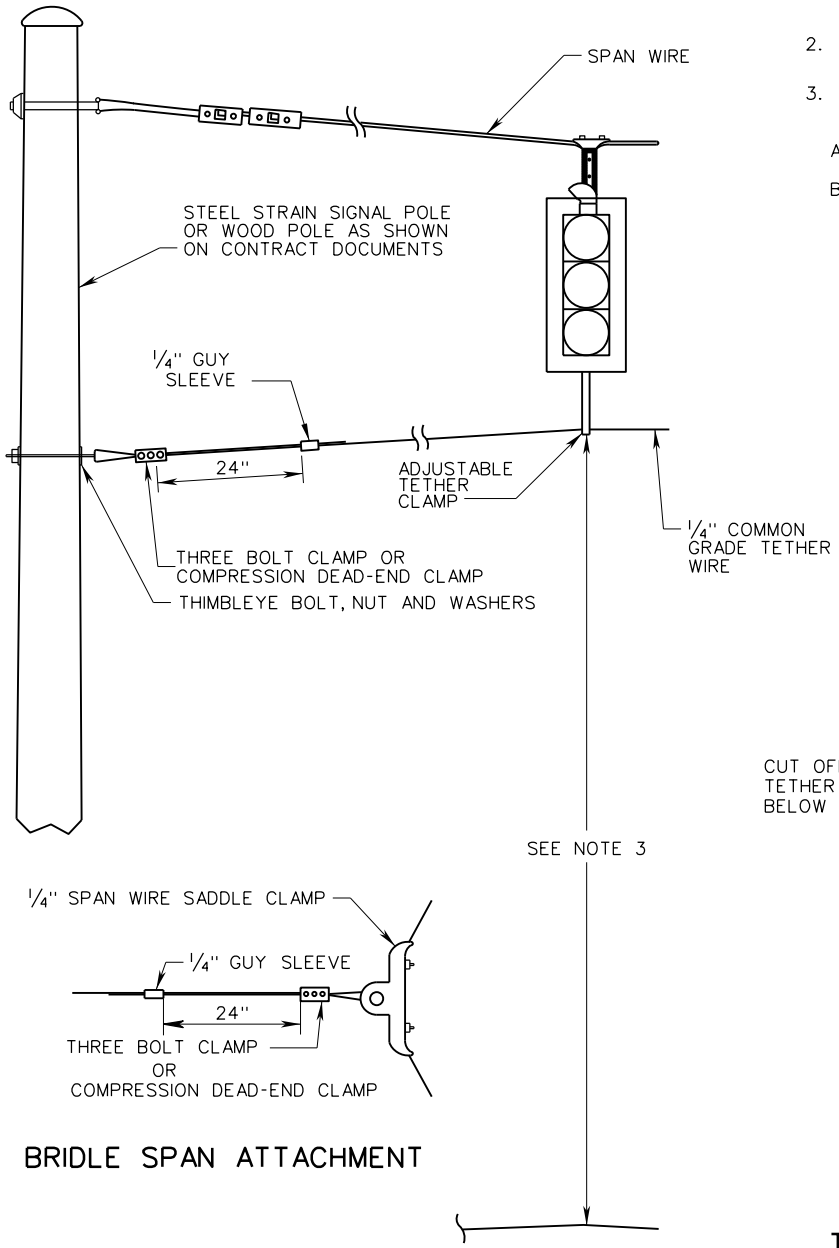

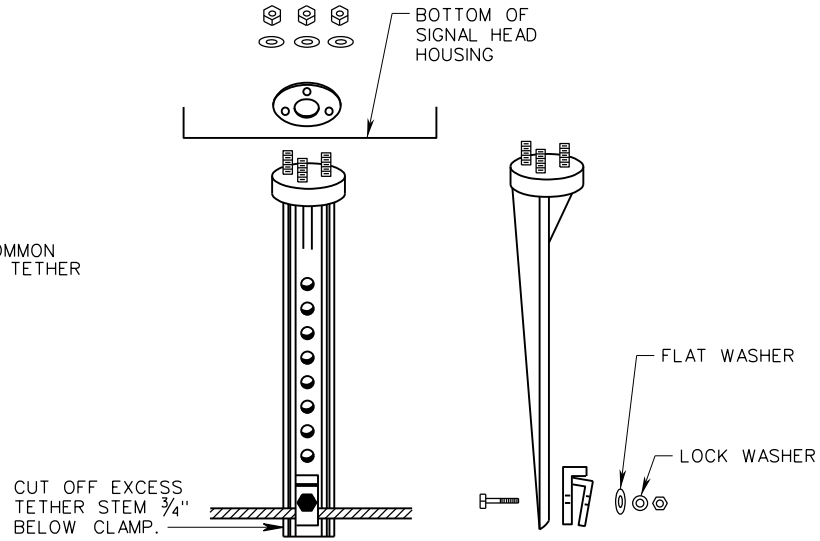

FRONT VIEW SIDE VIEW

ADJUSTABLE TETHER CLAMP

BRIDLE SPAN ATTACHMENT

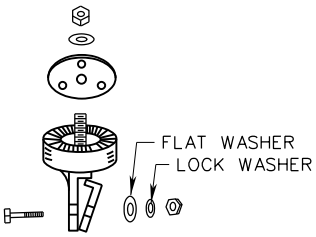

TETHER CLAMP

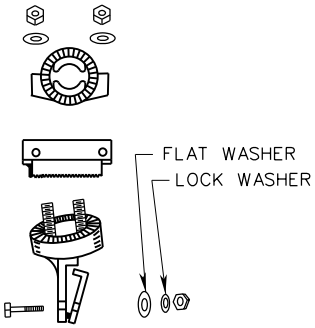

FIVE-SECTION HEAD CLUSTER TETHER CLAMP

SPECIFICATION REFERENCE	A COPY OF THE ORIGINAL SEALED AND SIGNED DRAWING IS ON FILE IN THE CENTRAL OFFICE.	VDOT ROAD AND BRIDGE STANDARDS	
703	TETHER WIRE DETAILS VIRGINIA DEPARTMENT OF TRANSPORTATION	REVISION DATE 02/16	SHEET 1 OF 1 1304.10

SMD-1,2

SPAN WIRE INSTALLATION

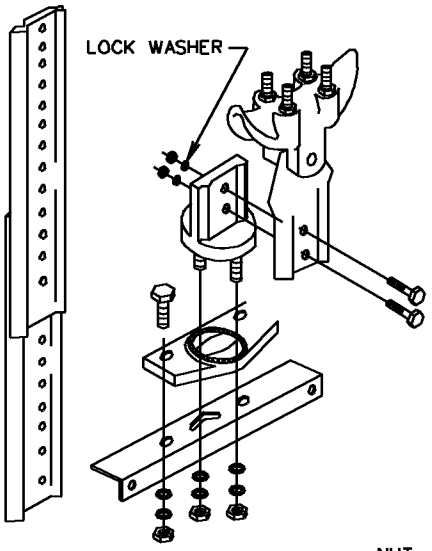

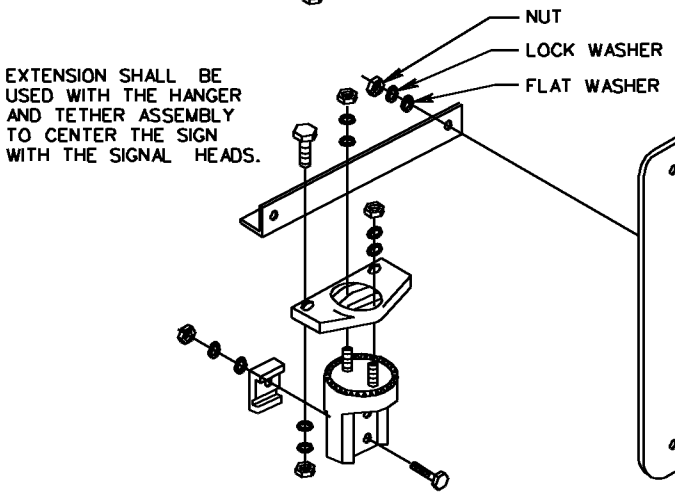

SMD-1

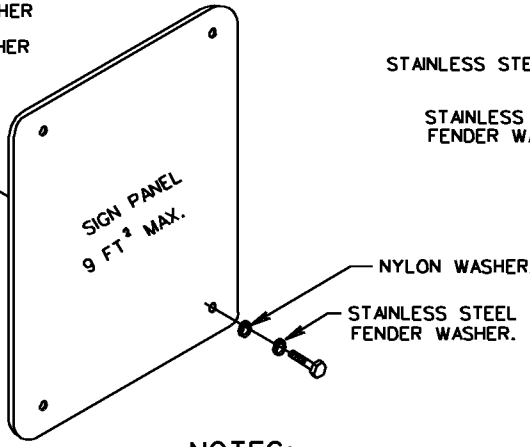

MAST ARM INSTALLATION

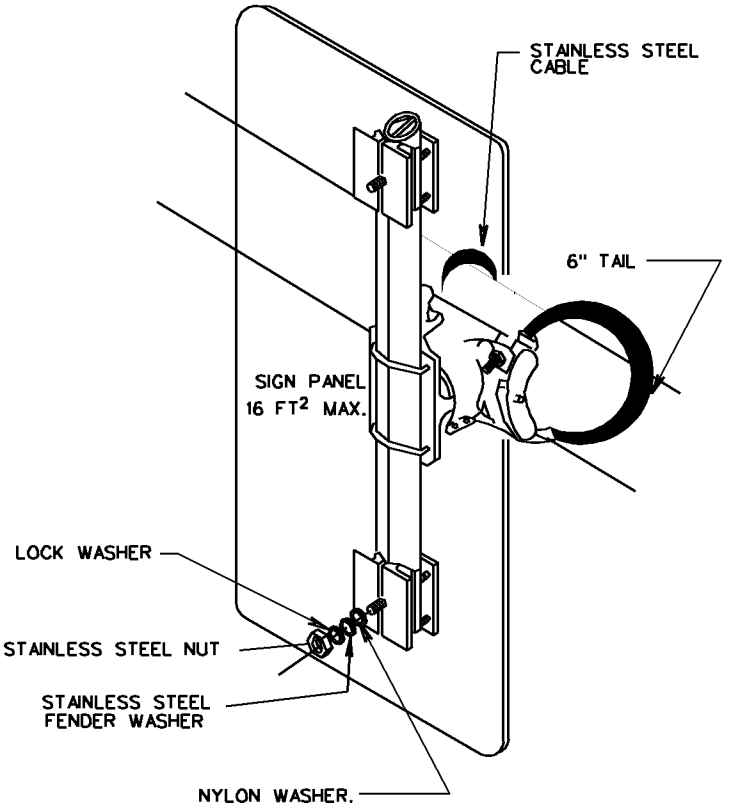

SMD-2

NOTES:

NUTS AND BOLTS USED FOR ATTACHMENT OF SIGN PANEL SHALL BE STAINLESS STEEL AND ¾" IN DIAMETER.

A 1¼" NYLON AND STAINLESS STEEL FENDER WASHER SHALL BE USED ON THE FRONT OF SIGN PANEL WHERE BOLT PASSES THROUGH SIGN PANEL.

ALL NUTS, BOLTS AND WASHERS SHALL BE STAINLESS STEEL OR GALVANIZED STEEL UNLESS OTHERWISE INDICATED

SPACERS SHALL BE INSTALLED BETWEEN THE EYELET OF THE SIGN HANGAR AND THE SPAN WIRE CLAMP TO ELIMINATE ANY GAP.

VDOT ROAD AND BRIDGE STANDARDS	SIGN MOUNTING DETAILS	SPECIFICATION REFERENCE
SHEET 1 OF 1	VIRGINIA DEPARTMENT OF TRANSPORTATION	703
1305.10	REVISION DATE 06-15-2009	

WD-1

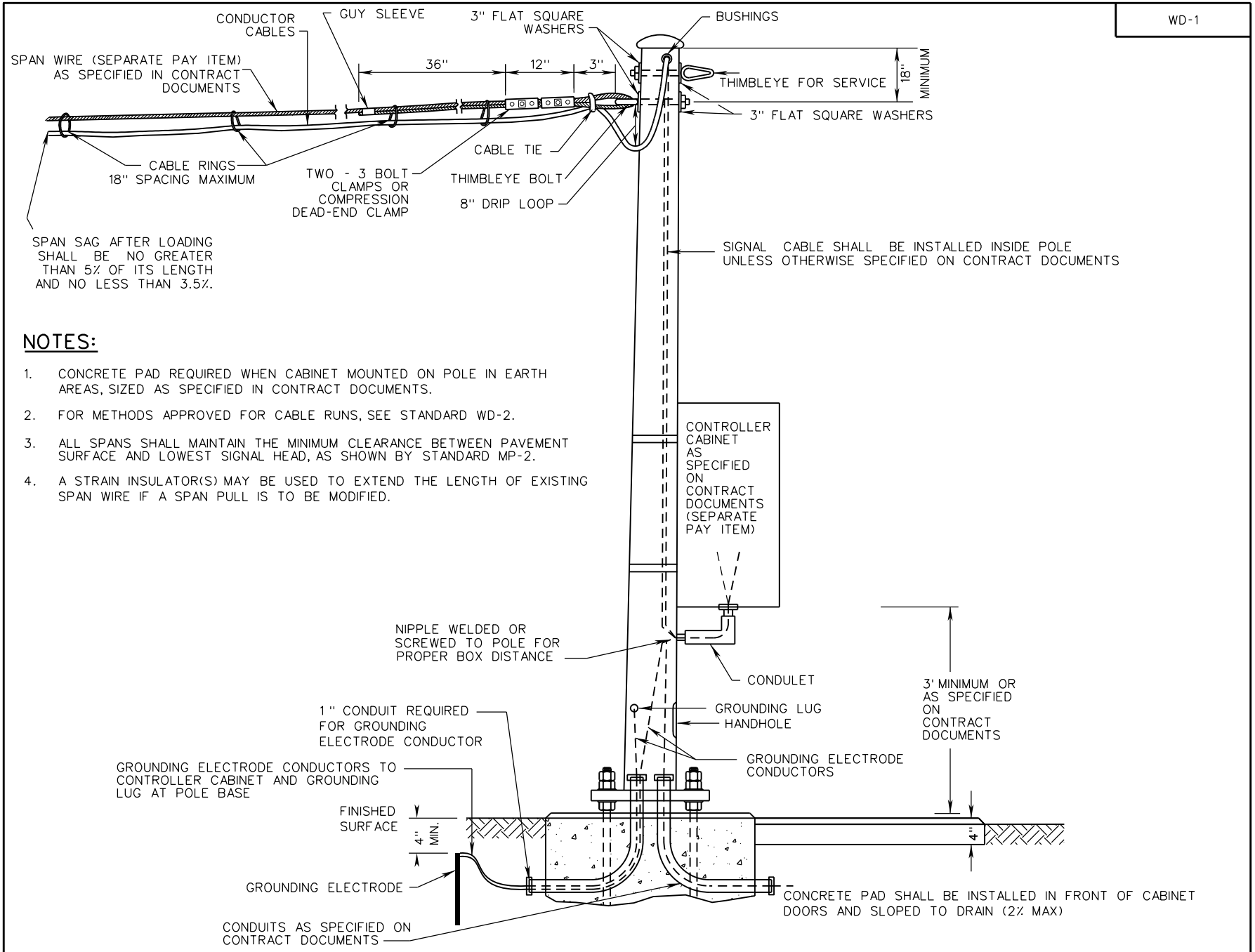

NOTES:

1. CONCRETE PAD REQUIRED WHEN CABINET MOUNTED ON POLE IN EARTH AREAS, SIZED AS SPECIFIED IN CONTRACT DOCUMENTS.
2. FOR METHODS APPROVED FOR CABLE RUNS, SEE STANDARD WD-2.
3. ALL SPANS SHALL MAINTAIN THE MINIMUM CLEARANCE BETWEEN PAVEMENT SURFACE AND LOWEST SIGNAL HEAD, AS SHOWN BY STANDARD MP-2.
4. A STRAIN INSULATOR(S) MAY BE USED TO EXTEND THE LENGTH OF EXISTING SPAN WIRE IF A SPAN PULL IS TO BE MODIFIED.

SPECIFICATION REFERENCE	A COPY OF THE ORIGINAL SEALED AND SIGNED DRAWING IS ON FILE IN THE CENTRAL OFFICE.	VDOT ROAD AND BRIDGE STANDARDS
700	STEEL STRAIN SIGNAL POLE WIRING AND RIGGING DETAILS VIRGINIA DEPARTMENT OF TRANSPORTATION	REVISION DATE 02/16 · SHEET 1 OF 1 · 1306.10

WD-2

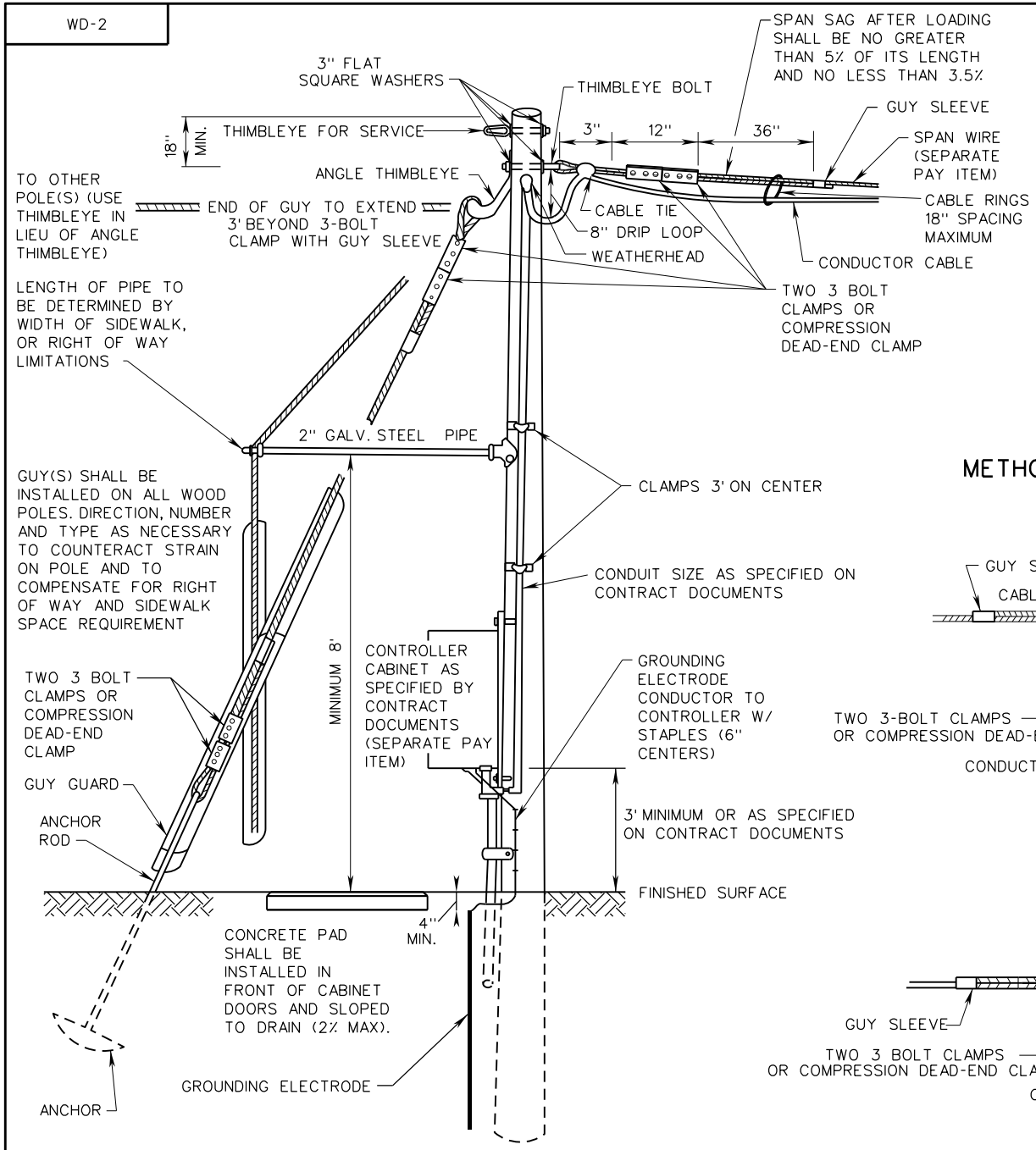

NOTES:

1. CONCRETE PAD REQUIRED WHEN CABINET MOUNTED ON POLE IN EARTH AREAS, SIZED AS SPECIFIED ON CONTRACT DOCUMENTS.
2. ALL SPANS SHALL MAINTAIN THE MINIMUM CLEARANCE BETWEEN PAVEMENT SURFACE AND LOWEST SIGNAL HEAD, AS SHOWN BY STANDARD MP-2.
3. A STRAIN INSULATOR(S) MAY BE USED TO EXTEND THE LENGTH OF EXISTING SPAN WIRE IF A SPAN PULL IS TO BE MODIFIED.
4. CABINET SHALL BE MOUNTED TO ALLOW ADEQUATE CLEARANCE BETWEEN OPEN CABINET DOOR, GUY WIRES, AND ASSOCIATED HARDWARE.
5. CONTRACTOR SHALL FURNISH THE DESIGN OF WOOD POLE TO INCLUDE CLASS, TYPE, DEPTH, AND GUY WIRE SIZE AND PLACEMENT UNLESS OTHERWISE SPECIFIED BY CONTRACT DOCUMENTS.

METHODS APPROVED FOR CABLE RUNS (TOP VIEW)

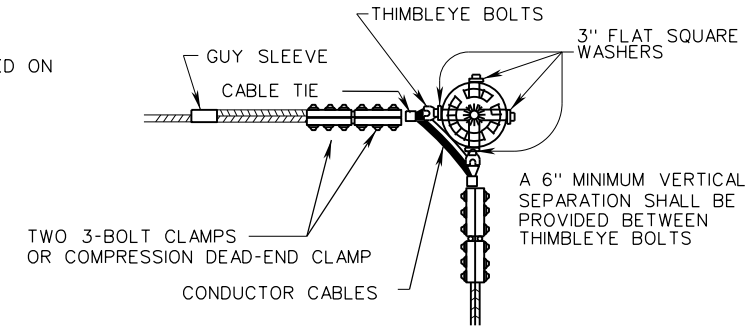

ANGLES LESS THAN 160°

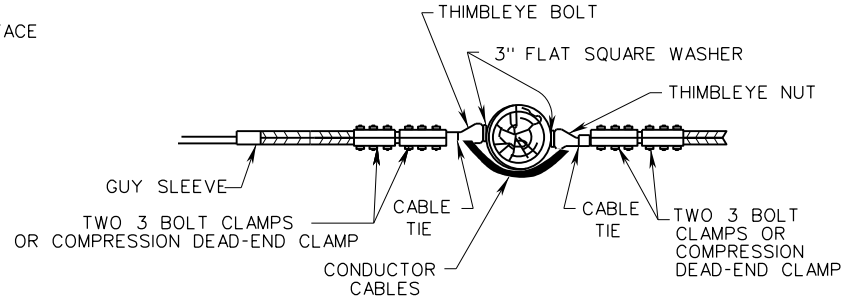

ANGLES GREATER THAN 160°

VDOT ROAD AND BRIDGE STANDARDS	A COPY OF THE ORIGINAL SEALED AND SIGNED DRAWING IS ON FILE IN THE CENTRAL OFFICE.		SPECIFICATION REFERENCE
SHEET 1 OF 1	WOOD POLE WIRING AND RIGGING DETAILS		700 703
1306.20	REVISION DATE 02/16	VIRGINIA DEPARTMENT OF TRANSPORTATION	

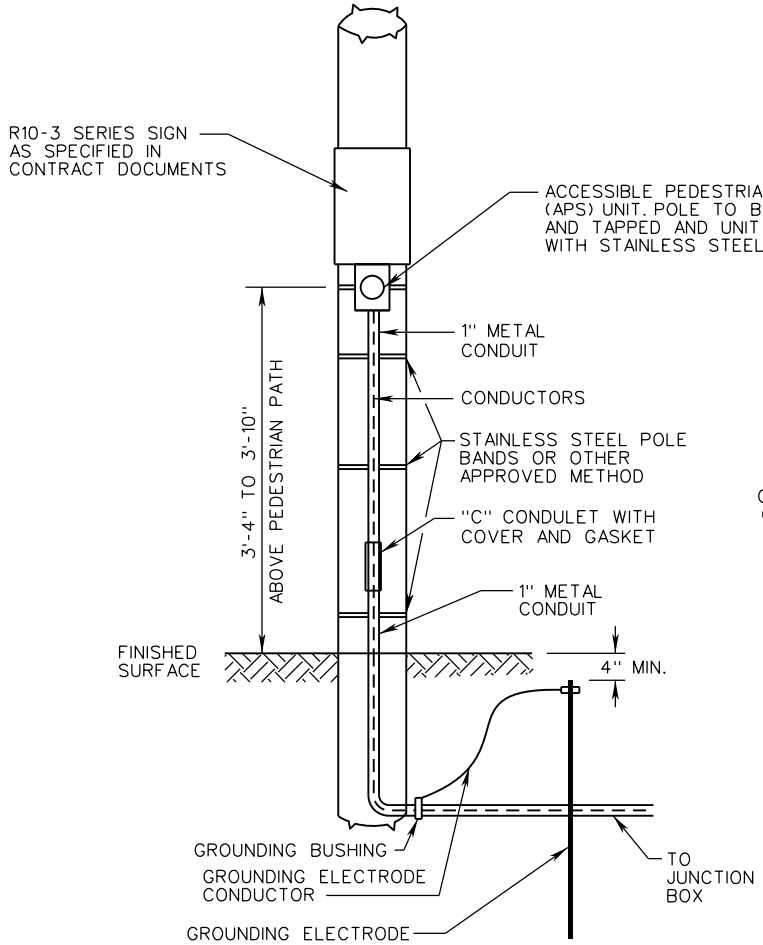

PA-1

WOOD/CONCRETE POLE

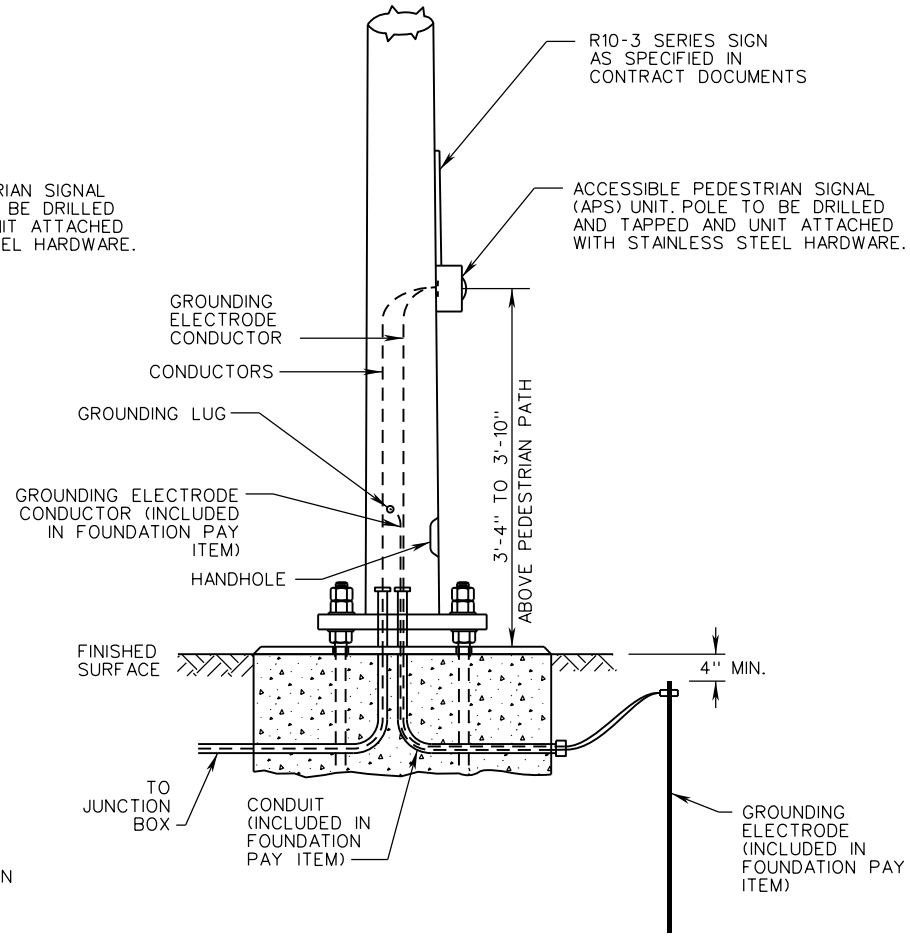

PA-2

SIGNAL/PEDESTAL POLE

SPECIFICATION REFERENCE	A COPY OF THE ORIGINAL SEALED AND SIGNED DRAWING IS ON FILE IN THE CENTRAL OFFICE.	VDOT ROAD AND BRIDGE STANDARDS	
700 703	PEDESTRIAN ACTUATION DETAILS VIRGINIA DEPARTMENT OF TRANSPORTATION	REVISION DATE 09/18	SHEET 1 OF 2 1307.10

PA-3

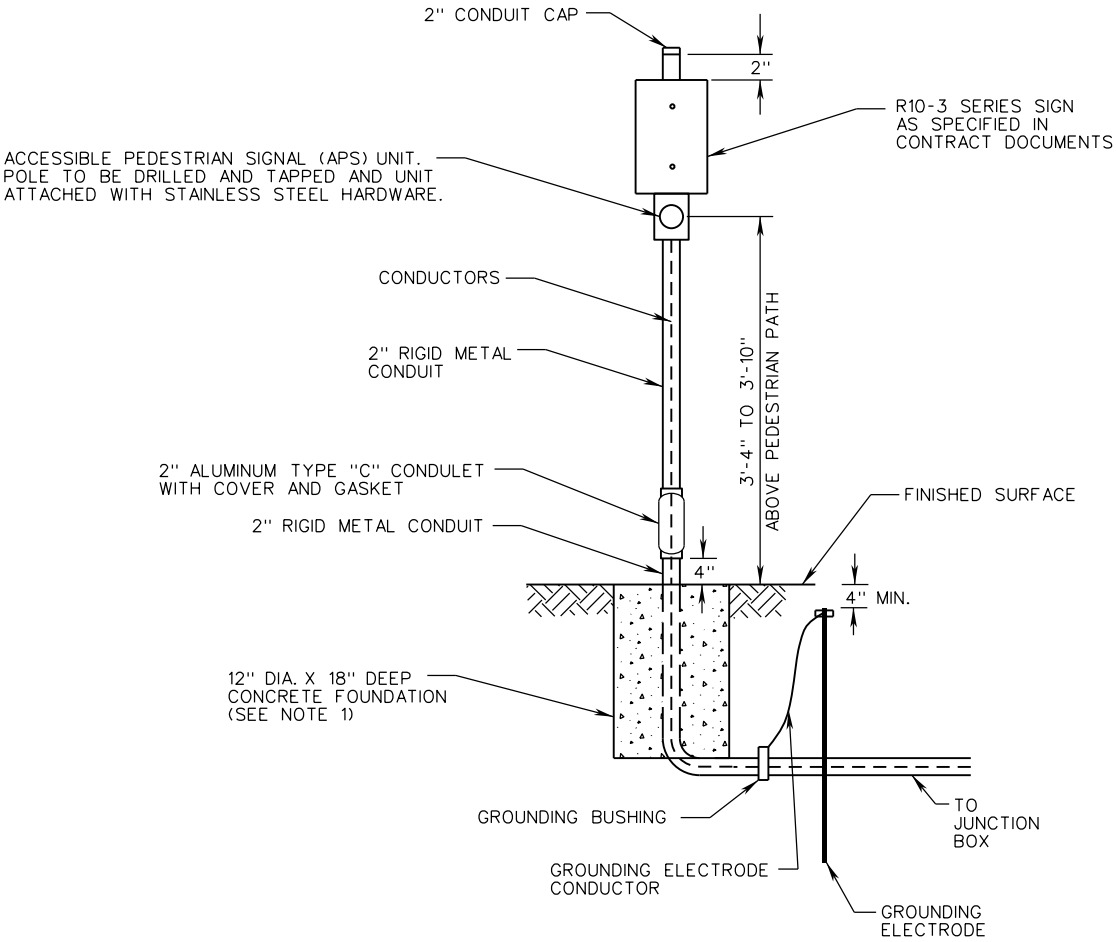

PA-3 METAL

NOTES:

1. CONCRETE SHALL BE CLASS A3 CONCRETE OR A PREAPPROVED BAG MIX FROM THE DEPARTMENT'S PREAPPROVED LIST NO. 31.

VDOT ROAD AND BRIDGE STANDARDS	A COPY OF THE ORIGINAL SEALED AND SIGNED DRAWING IS ON FILE IN THE CENTRAL OFFICE.		SPECIFICATION REFERENCE
SHEET 1 OF 1	PEDESTRIAN ACTUATION DETAILS		700 703
1307.11	REVISION DATE 09/18	VIRGINIA DEPARTMENT OF TRANSPORTATION	

PA-4

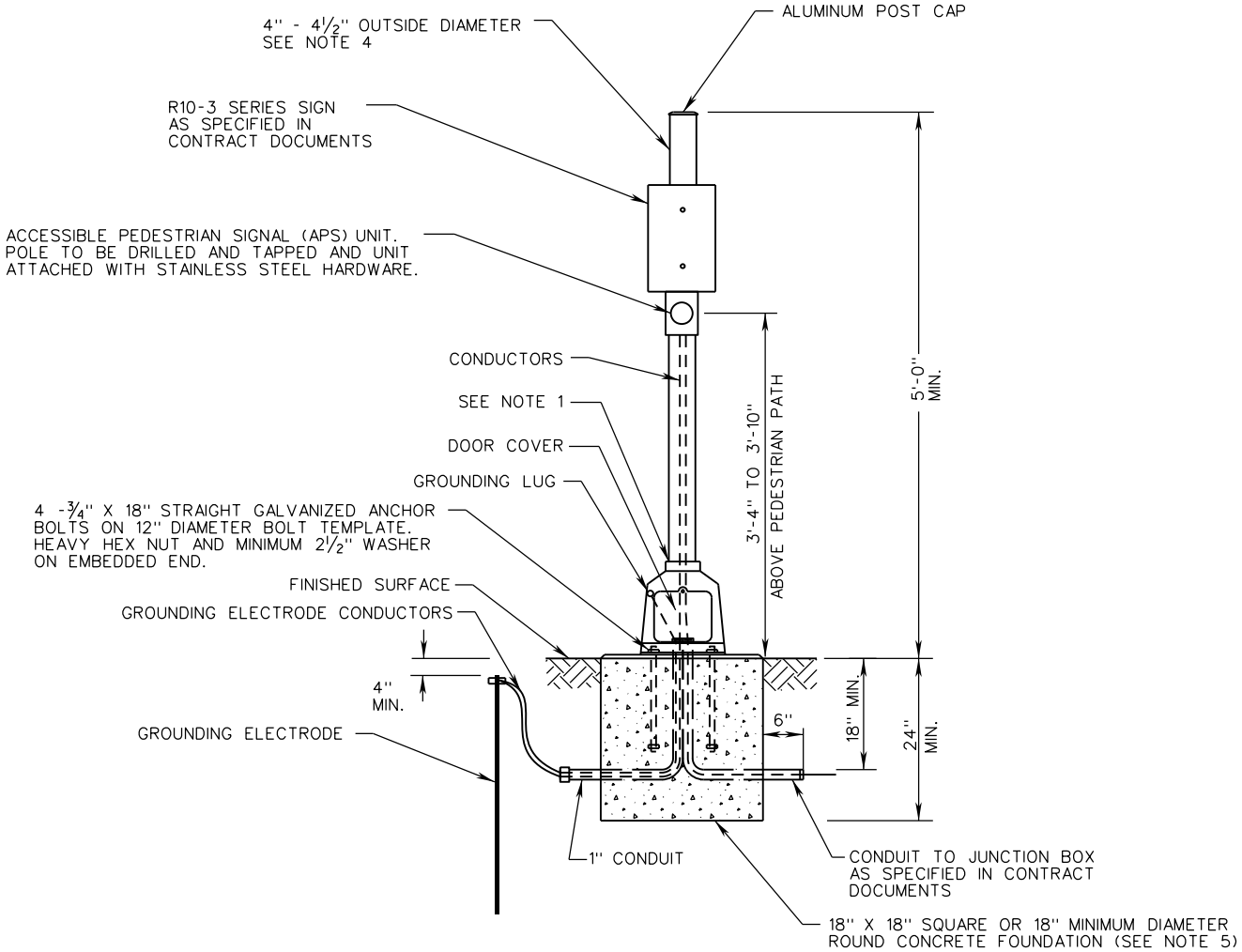

PA-4 PEDESTAL POLE

NOTES:

1. IF POLE SHAFT SCREWS INTO TRANSFORMER BASE INSTEAD OF BEING WELDED, A MINIMUM OF THREE SET SCREWS OR OTHER APPROVED METHOD SHALL BEUSED TO LOCK SHAFT IN POSITION.
2. PEDESTAL POLE SHALL HAVE A BREAKAWAY TRANSFORMER TYPE BASE. THE TRANSFORMER BASE AND NUT TIGHTENING SHALL BE IN ACCORDANCE WITH THE MANUFACTURER'S SPECIFICATIONS.
3. SEE PEDESTAL POLE STANDARDS (PF-2) FOR INSTALLATION DETAILS.
4. STRUCTURAL TUBE MATERIAL SHALL BE MINIMUM SCHEDULE 40 ALUMINUM 6061-T6.
5. CONCRETE SHALL BE CLASS A3 CONCRETE OR A PREAPPROVED BAG MIX FROM THE DEPARTMENT'S PREAPPROVED LIST NO. 31.

SPECIFICATION REFERENCE	A COPY OF THE ORIGINAL SEALED AND SIGNED DRAWING IS ON FILE IN THE CENTRAL OFFICE.	VDOT ROAD AND BRIDGE STANDARDS	
700 703	PEDESTRIAN ACTUATION DETAILS VIRGINIA DEPARTMENT OF TRANSPORTATION	REVISION DATE 09/18	SHEET 1 OF 1 1307.12

SP-5,6,7,8,9

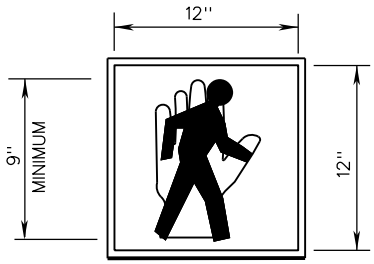

SP-5

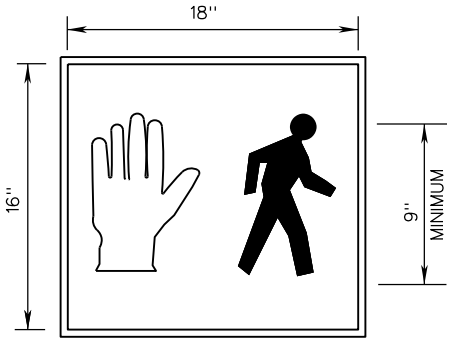

SP-6

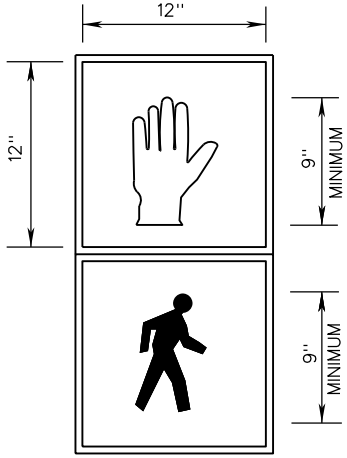

SP-7

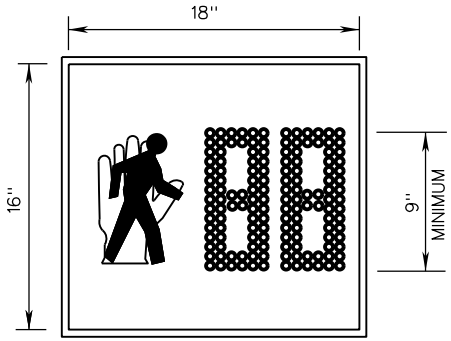

SP-8

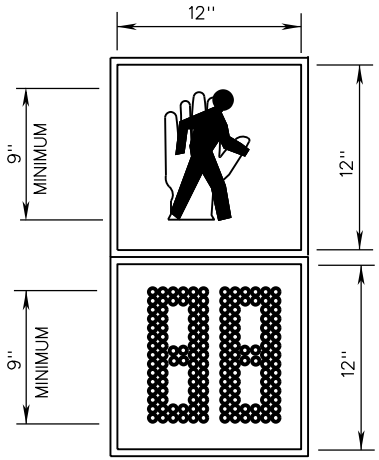

SP-9

NOTES:

1. COUNTDOWN DISPLAYS (SP-8, SP-9) SHALL BE PROVIDED WHERE THE PEDESTRIAN CHANGE INTERVAL IS GREATER THAN 7 SECONDS.

VDOT
ROAD AND BRIDGE STANDARDS

SHEET 1 OF 1
1308.10

REVISION DATE
02/16

A COPY OF THE ORIGINAL SEALED AND SIGNED DRAWING IS ON FILE IN THE CENTRAL OFFICE.

PEDESTRIAN SIGNAL INDICATION

DETAILS

VIRGINIA DEPARTMENT OF TRANSPORTATION

SPECIFICATION REFERENCE

703
238

FB-2

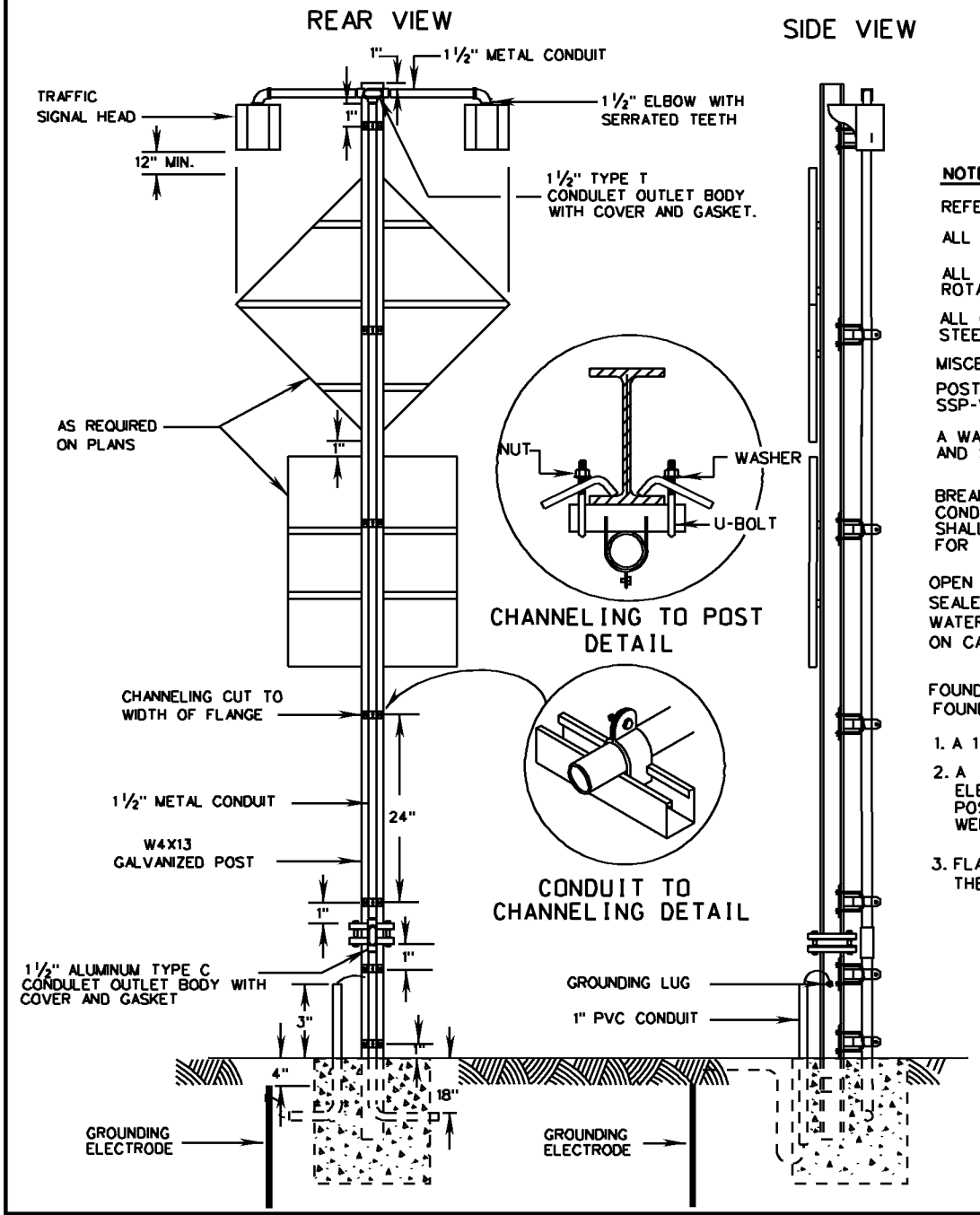

NOTES:

REFER TO STANDARD MP-2 FOR GROUNDING LUG DETAIL.

ALL SIGNAL LENSES SHALL BE YELLOW AND SHALL BE 12" DIAMETER.

ALL ELBOWS AND CONDULETS SHALL HAVE SET SCREWS TO PREVENT ROTATION.

ALL CHANNELING AND CLAMPS SHALL BE GALVANIZED OR STAINLESS STEEL.

MISCELLANEOUS HARDWARE SHALL BE STAINLESS STEEL.

POST AND SIGN PANELS SHALL BE INSTALLED IN ACCORDANCE WITH SSP-VA

A WATERPROOF SEALANT SHALL BE UTILIZED BETWEEN ELBOWS AND SIGNAL HEADS.

BREAKAWAY CONNECTORS SHALL BE INSTALLED ON THE SIGNAL CONDUCTORS WITH THE TYPE C CONDULET. BREAKAWAY CONNECTORS SHALL BE FUSED FOR THE HOT CONDUCTOR AND NONFUSED FOR THE GROUNDED CONDUCTOR.

OPEN ENDS OF CONDUITS WITH CONDUCTORS INSTALLED SHALL BE SEALED WITH AN APPROVED SOFT, PLIABLE, AND EASILY REMOVABLE, WATERPROOF SEALANT. THE SEALANT SHALL NOT HAVE A DELETERIOUS ON CABLE COVERINGS

FOUNDATION SHALL BE IN ACCORDANCE WITH SSP-VA FOR A 4' 6" X 1' 9" FOUNDATION EXCEPT FOR THE FOLLOWING:

1. A 1 1/2" METAL CONDUIT SHALL BE INSTALLED FOR ELECTRICAL POWER.
2. A 1" PVC CONDUIT, NO. 6 GROUNDING CONDUCTOR AND GROUNDING ELECTRODE SHALL BE INSTALLED FOR GROUNDING PURPOSES. STUB POST SHALL BE SUPPLIED WITH A GROUNDING LUG WELDED TO POST WEB.
3. FLASHING BEACON INSTALLED ON UNDIVIDED HIGHWAYS SHALL BE OF THE MEDIAN TYPE INSTALLED IN ACCORDANCE WITH STANDARD SSP-VA.

SPECIFICATION REFERENCE	FLASHING BEACON INSTALLATION DETAILS VIRGINIA DEPARTMENT OF TRANSPORTATION	VDOT ROAD AND BRIDGE STANDARDS	
700 703		REVISION DATE 06-15-2009	SHEET 1 OF 1 1309.10

PF-8

NOTES:

1. ANCHOR BOLTS SHALL BE AS PER STANDARD AB-1.

2. ANCHOR BOLT LAYOUT SHALL BE CHECKED AGAINST LATEST APPROVED STRUCTURE DRAWINGS.
   A. FOR MAST ARM SIGNAL POLE FOUNDATIONS, A MINIMUM OF EIGHT (8) 2-INCH DIAMETER ANCHOR BOLTS ARE REQUIRED. TYPE A AND TYPE D POLES MAY BE INSTALLED WITH SIX (6) 2-INCH DIAMETER ANCHOR BOLTS IN THE EIGHT-BOLT DESIGN CIRCLE IF THE CONTRACTOR'S DESIGN CALCULATIONS DEMONSTRATE THAT SIX BOLTS WILL BE SUFFICIENT FOR THE DESIGN AND LOADING REQUIREMENTS.
   B. FOR HIGH MAST LIGHT POLE FOUNDATIONS, A MINIMUM OF TWELVE (12) TWO-INCH DIAMETER ANCHOR BOLTS ARE REQUIRED.

3. ALL CONDUITS AS SPECIFIED IN THE CONTRACT DOCUMENTS. IN ADDITION 1 - 1" MIN. CONDUIT REQUIRED FOR GROUNDING ELECTRODE CONDUCTOR. 2 - 2" PVC CONDUITS REQUIRED FOR FUTURE USE. NOTE THAT ADDITIONAL SPARE CONDUITS MAY BE REQUIRED BY THE CONTRACT DOCUMENTS.

4. IN STEEP SLOPE CONDITIONS, THE 4'-0" MAXIMUM CLEARANCE ON THE DOWNSLOPE SIDE MAY BE EXCEEDED IF APPROVED BY THE ENGINEER. THE 12" MINIMUM CLEARANCE ON THE UPSLOPE SIDE SHALL NOT BE DECREASED.

5. FOUNDATION SHALL BE DESIGNED FOR TORSION. WINGS MAY BE USED FOR TORSIONAL RESISTANCE IF REQUIRED BY FOUNDATION DESIGNER. IF TORSION WINGS ARE PROVIDED, THE ANGLE BETWEEN THE TWO TORSION WINGS SHALL NORMALLY BE 180°, BUT MAY VARY FROM 90° TO 180° DEPENDING ON SITE CONDITIONS.

6. ANCHOR BOLTS AND BOLT TEMPLATE SHALL BE FURNISHED WITH POLE. POLE SHALL BE CENTERED ON FOUNDATION.

7. EACH FOUNDATION SHALL BE PERMANENTLY MARKED TO INDICATE ALL SIDES FROM WHICH CONDUITS PASS. THIS MARK SHALL BE MADE WITH A TROWEL WHEN FINISHING THE CONCRETE AND SHALL BE 1/4" DEEP AND 4" TO 6" LONG. LOCATIONS OF EMPTY CONDUITS SHALL HAVE AN ADDITIONAL 2" LONG MARK MADE PERPENDICULAR TO AND CENTERED ON THIS MARKING.

8. NO MORTAR, GROUT, OR CONCRETE SHALL BE PLACED BETWEEN BOTTOM OF BASE PLATE AND TOP OF FOUNDATION.

9. HEIGHT, WIDTH, DEPTH, AND REINFORCEMENT OF FOUNDATION SHALL BE AS REQUIRED BY FOUNDATION DESIGNER.

10. FOUNDATIONS SHALL NOT BE INSTALLED IN THE CENTER OF A DRAINAGE DITCH. IF APPROVED BY THE ENGINEER, FOUNDATIONS MAY BE INSTALLED IN THE SLOPE OF A DRAINAGE DITCH AT AN APPROVED HEIGHT ABOVE GRADE. THE FOUNDATION SHALL NOT BE PLACED IN THE FRONT SLOPE UNLESS THE ENGINEER DETERMINES THAT BACK SLOPE PLACEMENT IS NOT FEASIBLE.

11. THE EDGE OF THE FOUNDATION SHALL BE 1'-0" MIN. FROM THE EDGE OF A PEDESTRIAN PATH, OR 3'-0" MIN. FROM THE EDGE OF A SHARED USE PATH (SEE DETAIL B). IF APPROVED BY THE ENGINEER, FOUNDATIONS MAY BE PLACED IMMEDIATELY ADJACENT TO PEDESTRIAN PATH OR SHARED USE PATH.

12. SPREAD FOOTING MAY BE USED IF APPROVED BY THE ENGINEER.

13. SEE STANDARD VS-1 FOR VARMINT SCREEN DETAILS.

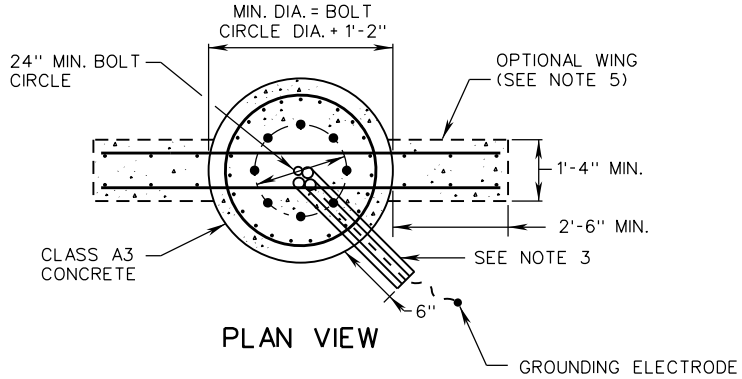

PLAN VIEW

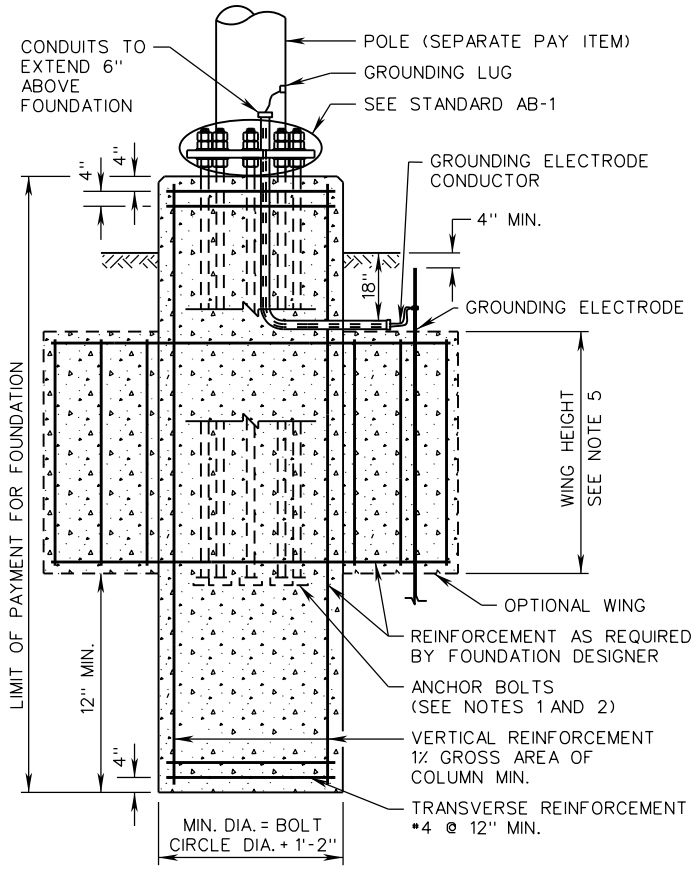

SIDE VIEW

A COPY OF THE ORIGINAL SEALED AND SIGNED DRAWING IS ON FILE IN THE CENTRAL OFFICE.

VDOT ROAD AND BRIDGE STANDARDS	SIGNAL AND HIGH MAST LIGHT POLE FOUNDATION INSTALLATION DETAILS VIRGINIA DEPARTMENT OF TRANSPORTATION	SPECIFICATION REFERENCE
SHEET 1 OF 2 / 1310.12 — REVISION DATE 07/16		700

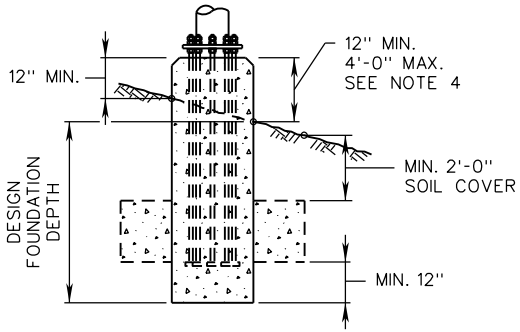

DETAIL A
FOUNDATION NOT ADJACENT TO
PEDESTRIAN PATH DETAIL

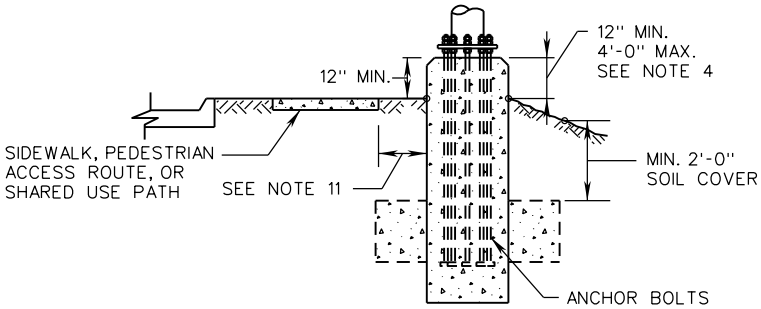

DETAIL B
FOUNDATION ADJACENT TO
PEDESTRIAN PATH DETAIL

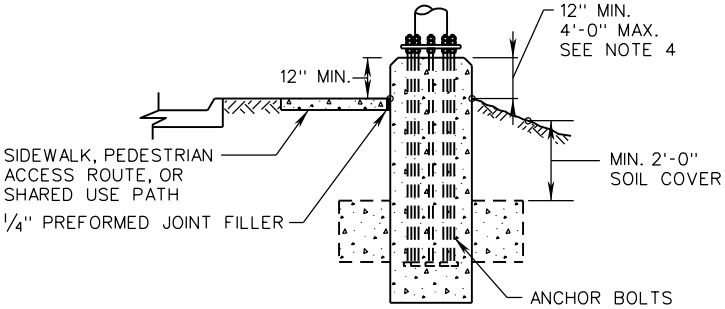

DETAIL C
ALTERNATE FOUNDATION ADJACENT TO
PEDESTRIAN PATH DETAIL
(IF APPROVED BY THE ENGINEER)

A COPY OF THE ORIGINAL SEALED AND SIGNED DRAWING IS ON FILE IN THE CENTRAL OFFICE.

SPECIFICATION REFERENCE	SIGNAL AND HIGH MAST LIGHT POLE FOUNDATION INSTALLATION DETAILS VIRGINIA DEPARTMENT OF TRANSPORTATION	VDOT ROAD AND BRIDGE STANDARDS	
700		REVISION DATE 07/16	SHEET 2 OF 2 1310.13

STANDARD

THIS PAGE INTENTIONALLY LEFT BLANK

VDOT
ROAD AND BRIDGE STANDARDS

SHEET 1 OF 1

REVISION DATE

TITLE

VIRGINIA DEPARTMENT OF TRANSPORTATION

SPECIFICATION REFERENCE

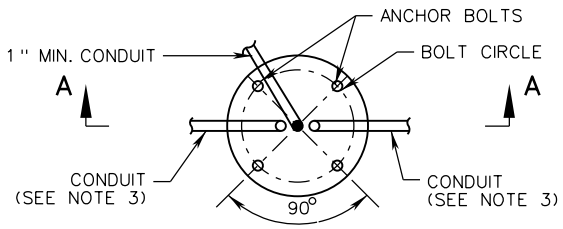

PLAN VIEW

TYPE	W	D	VERTICAL BARS
A	2'-6"	8'	8 -#8

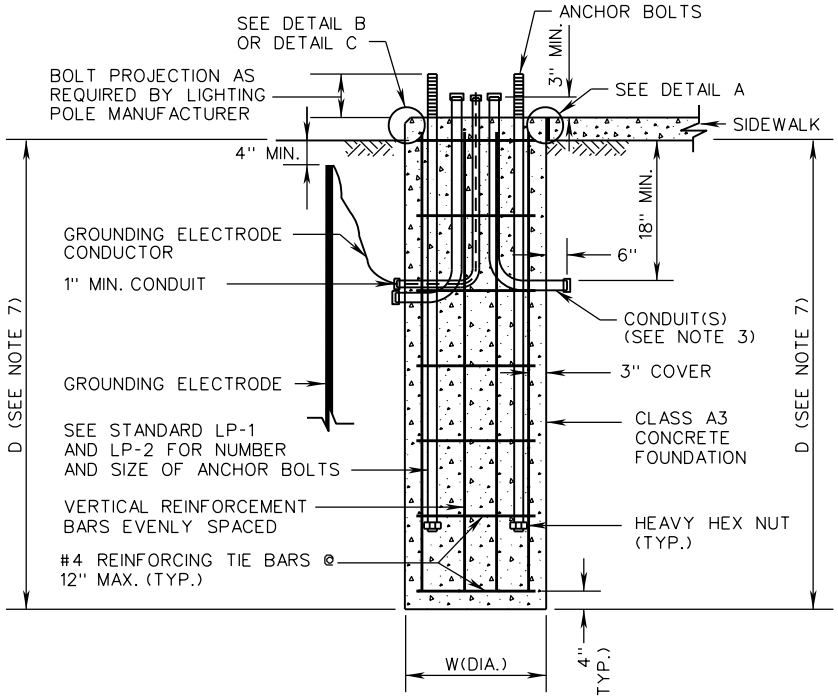

SECTION A-A

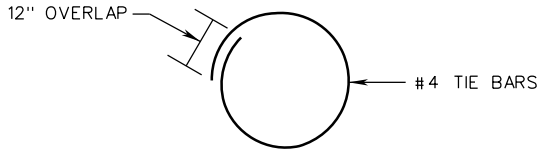

PLAN VIEW
OF TIE BAR

NOTES:

1. CONDUIT ELBOWS SHALL HAVE A 90° BEND. THE BEND RADIUS SHALL BE IN ACCORDANCE WITH THE N.E.C.
2. THE BOLT TEMPLATE SHALL BE FURNISHED BY THE LIGHTING POLE MANUFACTURER. POLE SHALL BE CENTERED ON FOUNDATION.
3. THE NUMBER, ORIENTATION AND SIZE OF CONDUITS ENTERING AND EXITING FOUNDATIONS SHALL BE AS SHOWN IN THE CONTRACT DOCUMENTS. EACH FOUNDATION SHALL BE PERMANENTLY MARKED TO INDICATE ALL SIDES FROM WHICH CONDUITS PASS. THIS MARK SHALL BE MADE WITH A TROWEL WHEN FINISHING THE CONCRETE AND SHALL BE ¼" DEEP AND 4" TO 6" LONG. LOCATIONS OF EMPTY CONDUITS SHALL HAVE AN ADDITIONAL 2" LONG MARK MADE PERPENDICULAR TO AND CENTERED ON THIS MARKING.
4. NO MORTAR, GROUT, OR CONCRETE SHALL BE PLACED BETWEEN BOTTOM OF BASE PLATE AND TOP OF FOUNDATION.
5. ANCHOR BOLTS SHALL BE STRAIGHT. THREADED REINFORCING STEEL IS NOT ALLOWED. ¼" ANCHOR RING PLATE MAY BE USED TO KEEP ANCHOR BOLTS PLUMB DURING INSTALLATION.
6. FOUNDATIONS SHALL NOT BE INSTALLED IN THE CENTER OF A DRAINAGE DITCH. IF APPROVED BY THE ENGINEER, FOUNDATIONS MAY BE INSTALLED IN THE SLOPE OF A DRAINAGE DITCH AT AN APPROVED HEIGHT ABOVE GRADE. THE FOUNDATION SHALL NOT BE PLACED IN THE FRONT SLOPE UNLESS THE ENGINEER DETERMINES THAT BACK SLOPE PLACEMENT IS NOT FEASIBLE.
7. D IS THE MINIMUM DISTANCE FROM THE BOTTOM OF THE POLE FOUNDATION TO THE BOTTOM OF THE SIDEWALK OR THE POINT OF LOWEST GRADED ELEVATION ADJACENT TO THE FOUNDATION.
8. IF POOR SOIL CONDITIONS OR HIGH WATER TABLE IS ENCOUNTERED DURING EXCAVATION, THE CONTRACTOR SHALL NOTIFY THE ENGINEER PRIOR TO PROCEEDING WITH FOUNDATION INSTALLATION.

SPECIFICATION REFERENCE	A COPY OF THE ORIGINAL SEALED AND SIGNED DRAWING IS ON FILE IN THE CENTRAL OFFICE.	VDOT ROAD AND BRIDGE STANDARDS	
700	LIGHTING POLE FOUNDATION INSTALLATION DETAILS VIRGINIA DEPARTMENT OF TRANSPORTATION	REVISION DATE 08/17	SHEET 1 OF 2 1310.20

LF-1

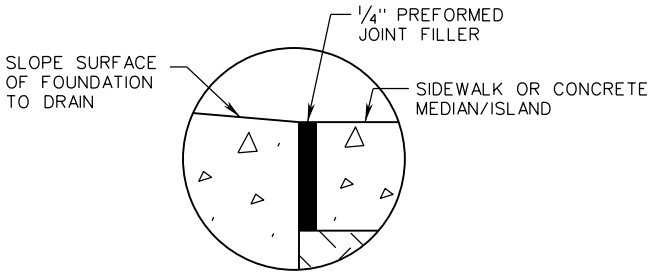

DETAIL A
SIDEWALK OR CONCRETE MEDIAN/ISLAND

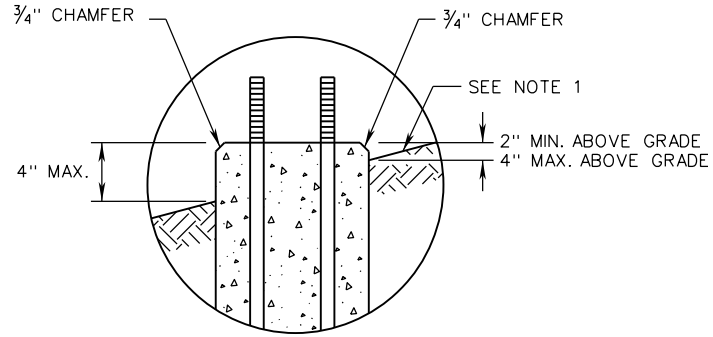

DETAIL B
BREAKAWAY BASE

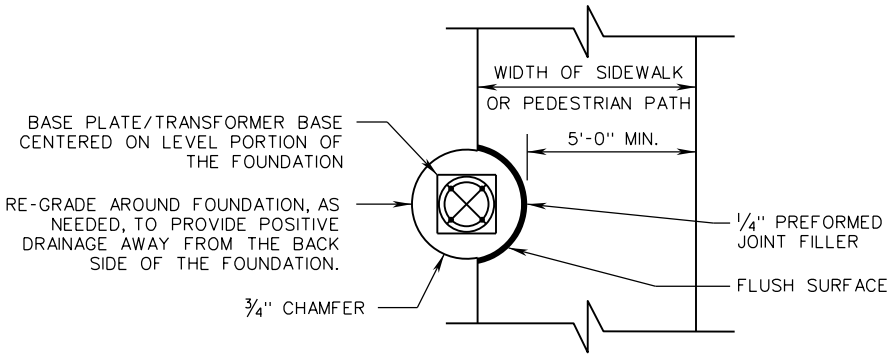

PLAN VIEW OF DETAIL A
AT SIDEWALK

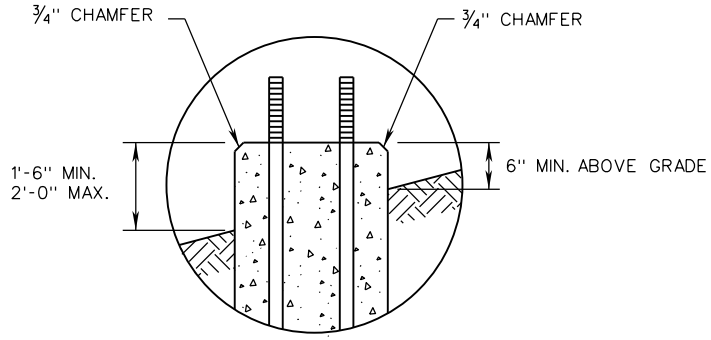

DETAIL C
NON-BREAKAWAY BASE

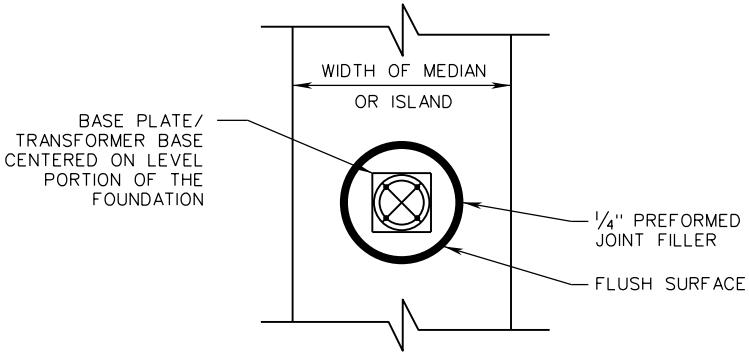

PLAN VIEW OF DETAIL A
AT CONCRETE MEDIAN/ISLAND

NOTES:

1. IF NEEDED IN SLOPED CONDITIONS TO MAINTAIN POSITIVE DRAINAGE AROUND THE FOUNDATION AND TO PROVIDE THE CLEARANCES SHOWN IN DETAIL B, THE CONTRACTOR SHALL RE-GRADE AND ADD RETAINING CURB OR MATERIAL ON THE UP SLOPE WHEN DIRECTED BY THE ENGINEER. RE-GRADING AND RETAINING CURB SHALL BE INCLUDED IN THE PRICE BID FOR FOUNDATION.
2. WHEN FOUNDATION IS ADJACENT TO THE BACK EDGE OF SIDEWALK BUT NOT WITHIN THE SIDEWALK THE TOP OF THE FOUNDATION SHALL BE ELEVATED 2 INCHES MINIMUM ABOVE THE SIDEWALK GRADE.

A COPY OF THE ORIGINAL SEALED AND SIGNED DRAWING IS ON FILE IN THE CENTRAL OFFICE.

VDOT ROAD AND BRIDGE STANDARDS	LIGHTING POLE FOUNDATION INSTALLATION DETAILS VIRGINIA DEPARTMENT OF TRANSPORTATION	SPECIFICATION REFERENCE	
SHEET 2 OF 2	REVISION DATE 07/16	700	
1310.21			

STANDARD

THIS PAGE INTENTIONALLY LEFT BLANK

SPECIFICATION REFERENCE	TITLE VIRGINIA DEPARTMENT OF TRANSPORTATION	VDOT ROAD AND BRIDGE STANDARDS REVISION DATE	SHEET 1 OF 1 ____._

LP-1, 2

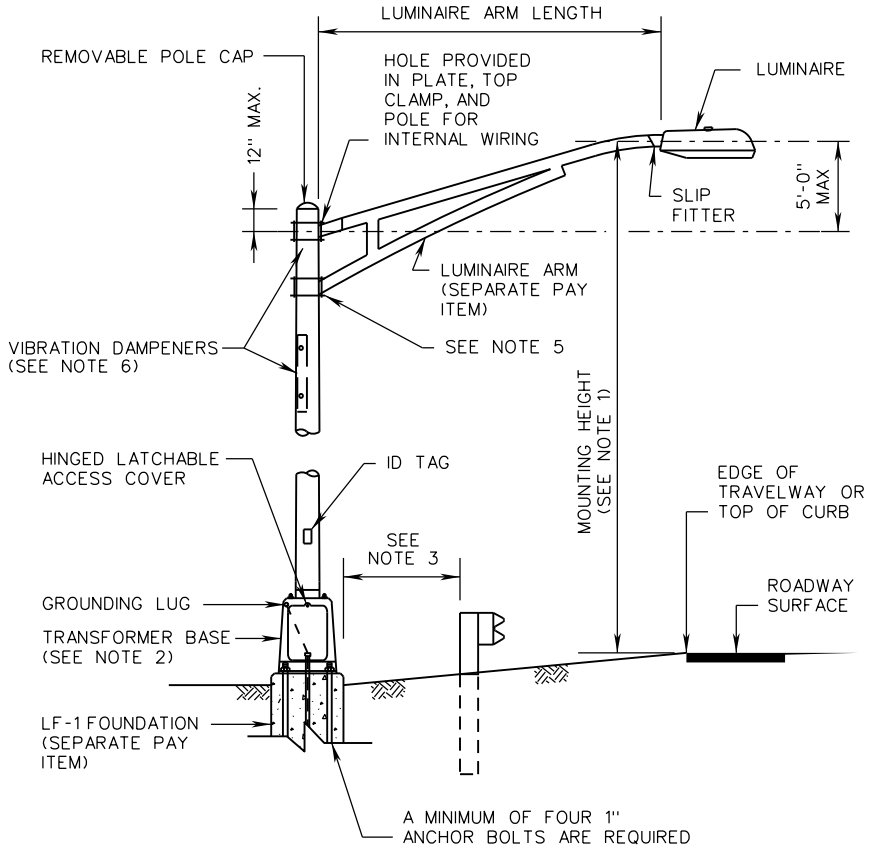

LP-1

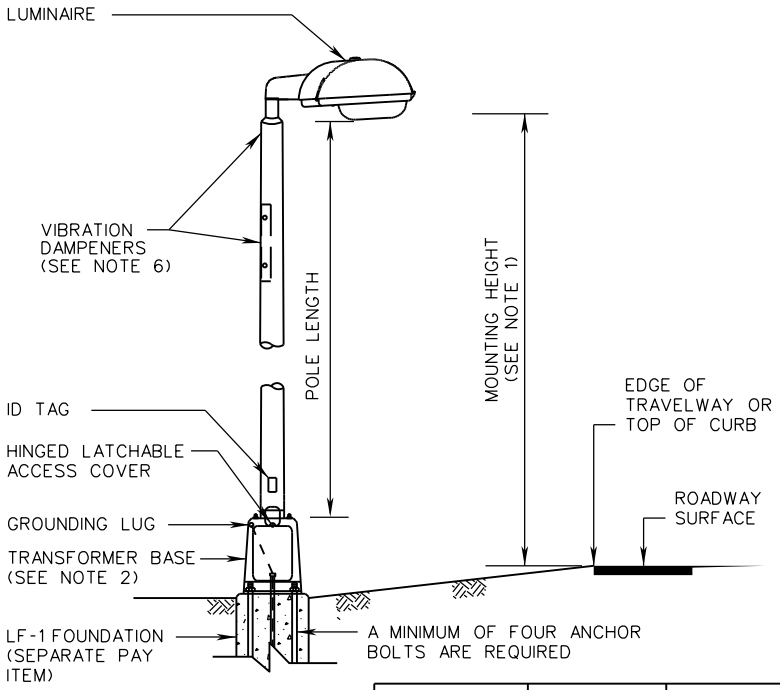

LP-2

LP-2 POLE LENGTH (FEET)	BOLT CIRCLE DIAMETER	ANCHOR BOLT DIAMETER
A (5-17)	12"	1"
B (18-22)	12"	1"
C (23-27)	12"	1"
D (28-32)	12"	1"
E (33-37)	15"	1"
F (38-42)	15"	1"
G (43-47)	15"	1"
H (48-52)	16"	1"
I (53-55)	16"	1 1/4"

NOTES:

1. THE MOUNTING HEIGHT SHOWN IN THE CONTRACT DOCUMENTS SHALL BE ADHERED TO WITHIN A TOLERANCE OF 12" AND IN NO CASE LESS THAN THE MOUNTING HEIGHT SHOWN.
2. TIGHTEN TRANSFORMER BASE NUTS WITH A WRENCH USING TURN-OF-THE-NUT METHOD UNLESS SPECIFIED OTHERWISE IN MANUFACTURER'S INSTALLATION INSTRUCTIONS.
3. LP-1 AND LP-2 LIGHTING POLES SHALL BE LOCATED SUCH THAT THE NEAR SIDE EDGE OF THE FOUNDATION IS OUTSIDE OF THE GUARDRAIL DEFLECTION DISTANCE.
4. ALL LP-1 AND LP-2 POLES SHALL BE INSTALLED ON BREAKAWAY OR NON-BREAKAWAY TRANSFORMER BASES, AS SPECIFIED ON THE PLANS. IF LEVELING NUTS ARE USED FOR INSTALLATION, A VARMIT SCREEN SHALL BE INSTALLED IN ACCORDANCE WITH STANDARD VS-1.
5. POLE CLAMP SHALL BE INSTALLED IN ACCORDANCE WITH MANUFACTURER'S INSTALLATION INSTRUCTIONS WITHOUT THE USE OF SPACERS OR SHIMS.
6. FIRST AND SECOND MODE VIBRATION DAMPENERS SHALL BE DESIGNED AND INSTALLED ON ALL ALUMINUM POLES.

VDOT
ROAD AND BRIDGE STANDARDS

SHEET 1 OF 1
1311.10

REVISION DATE
09/18

A COPY OF THE ORIGINAL SEALED AND SIGNED DRAWING IS ON FILE IN THE CENTRAL OFFICE.

LIGHTING POLE
INSTALLATION DETAILS

VIRGINIA DEPARTMENT OF TRANSPORTATION

SPECIFICATION REFERENCE
700

LP-3

NOTES:

1. WINCH ASSEMBLY AND CIRCUIT BREAKER TO BE ACCESSIBLE FROM HANDHOLE.
2. THE MINIMUM BASE PLATE THICKNESS SHALL BE 2".
3. SEE STANDARD AB-1 FOR ANCHOR BOLT DETAILS.
4. SEE STANDARD VS-1 FOR VARMINT SCREEN DETAILS.
5. SEE STANDARD HH-1 FOR HANDHOLE DETAILS.
6. TYPE 9 IS INTENTIONALLY OMITTED FROM THIS TABLE.

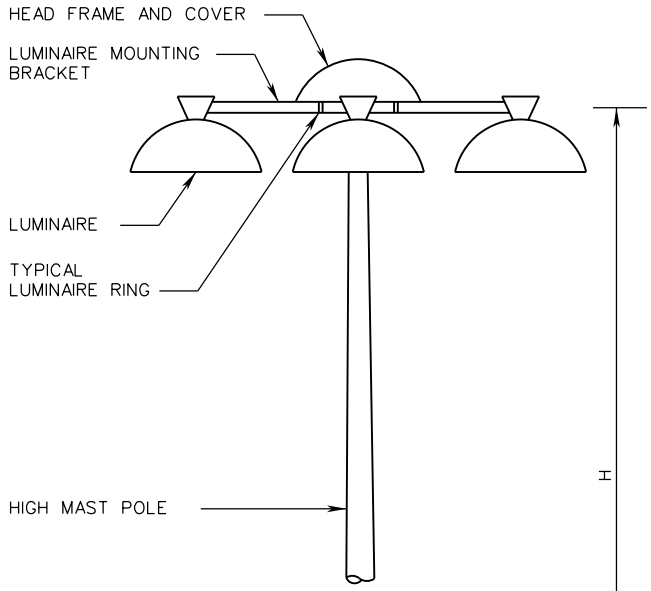

TYPE	H
1	70'
2	80'
3	90'
4	100'
5	110'
6	120'
7	130'
8	140'
9	SEE NOTE 6
10	60'

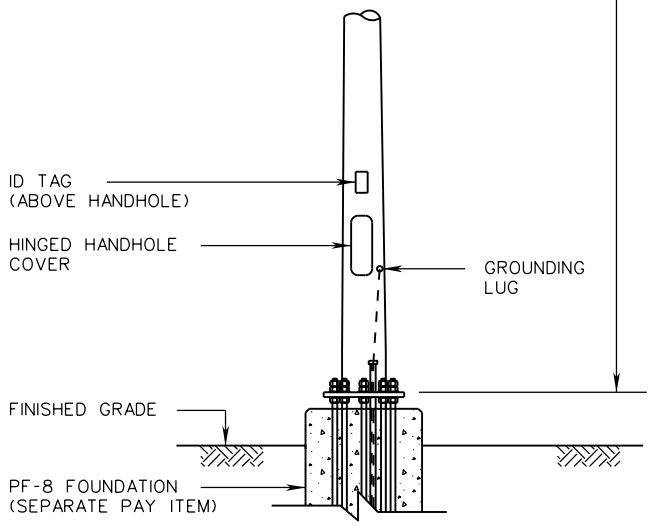

A COPY OF THE ORIGINAL SEALED AND SIGNED DRAWING IS ON FILE IN THE CENTRAL OFFICE.

SPECIFICATION REFERENCE	HIGH MAST LIGHT POLE DETAILS	VDOT ROAD AND BRIDGE STANDARDS
700 705	VIRGINIA DEPARTMENT OF TRANSPORTATION	REVISION DATE 07/16 — SHEET 1 OF 1 — 1311.20

SE-1

NOTES:

1. LOCAL POWER UTILITY COMPANY WILL INSTALL SERVICE CABLE FROM THEIR POWER SOURCE TO THE TOP OF THE OVERHEAD SERVICE POLE AND MAKE REQUIRED SPLICES TO THE CABLES PROVIDED.
2. POLE HEIGHT AND SIZE WILL BE AS SPECIFIED IN THE CONTRACT DOCUMENTS.
3. THIS STANDARD IS APPLICABLE FOR ALL ELECTRICAL SERVICES OTHER THAN 480Y/277.
4. FOR ROADWAY LIGHTING SYSTEMS, ONLY SAFETY SWITCH SHALL BE USED.
5. ALL ELECTRICAL CONNECTIONS AND SPLICES SHALL BE TESTED FOR ELECTRICAL CONTINUITY.
6. CONDUIT AND CONDUCTOR SIZE SHALL BE AS SPECIFIED IN THE CONTRACT DOCUMENTS.
7. RIGID METAL RISER CONDUIT AND SERVICE CABLE SIZE SHALL BE AS SPECIFIED IN THE CONTRACT DOCUMENTS, OR AS SPECIFIED BY THE LOCAL POWER COMPANY.
8. WHEN REQUIRED BY THE CONTRACT DOCUMENTS, AN ELECTRICAL SERVICE WORK PAD SHALL BE PLACED IN FRONT OF THE SAFETY SWITCH/BREAKER BOX. ELECTRICAL SERVICE WORK PAD SHALL BE A SEPARATE PAY ITEM.

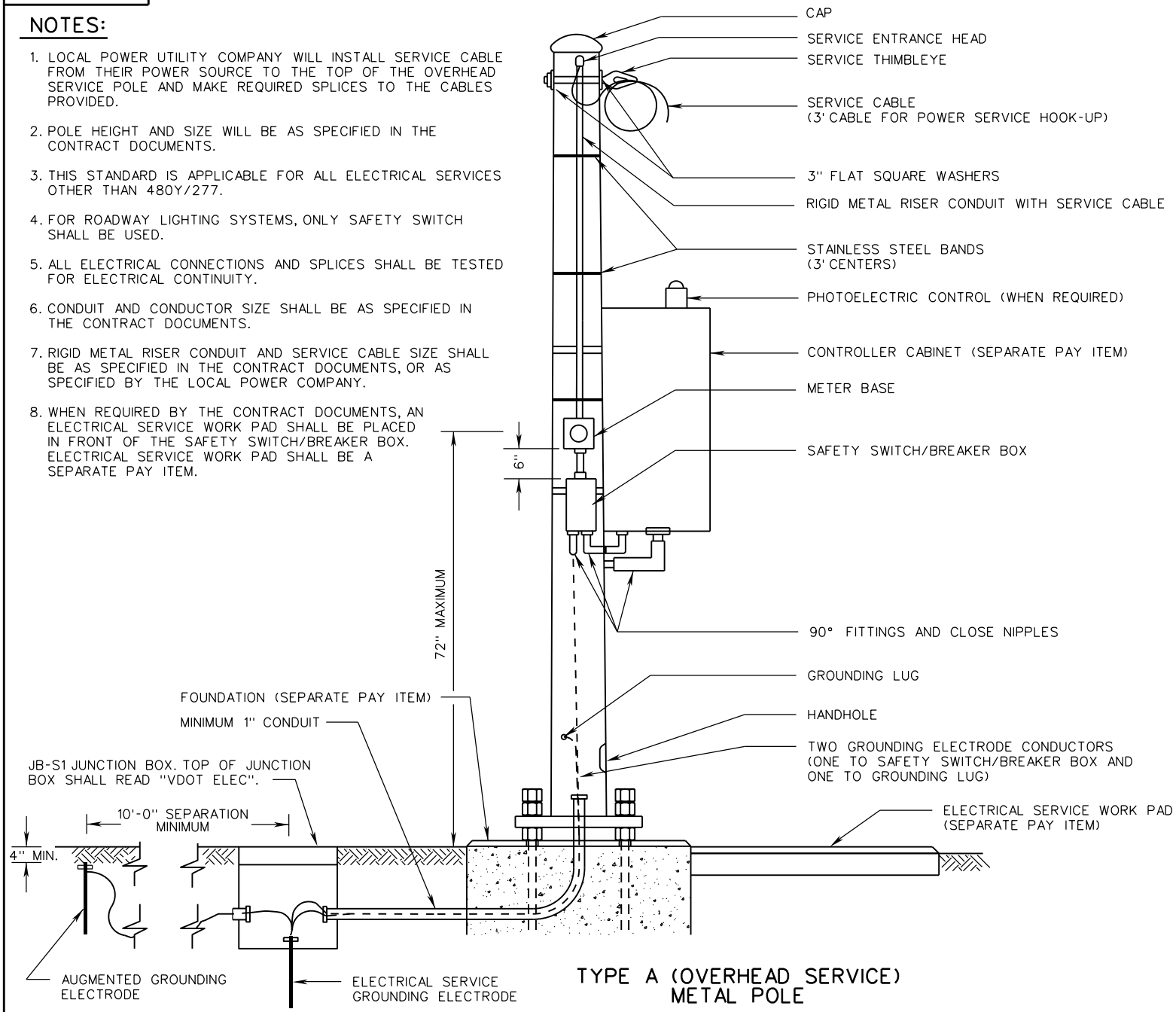

TYPE A (OVERHEAD SERVICE)
METAL POLE

VDOT ROAD AND BRIDGE STANDARDS	A COPY OF THE ORIGINAL SEALED AND SIGNED DRAWING IS ON FILE IN THE CENTRAL OFFICE.	SPECIFICATION REFERENCE
SHEET 1 OF 2	ELECTRICAL SERVICE INSTALLATION DETAILS	700
1312.10	REVISION DATE 02/16	VIRGINIA DEPARTMENT OF TRANSPORTATION

SE-1

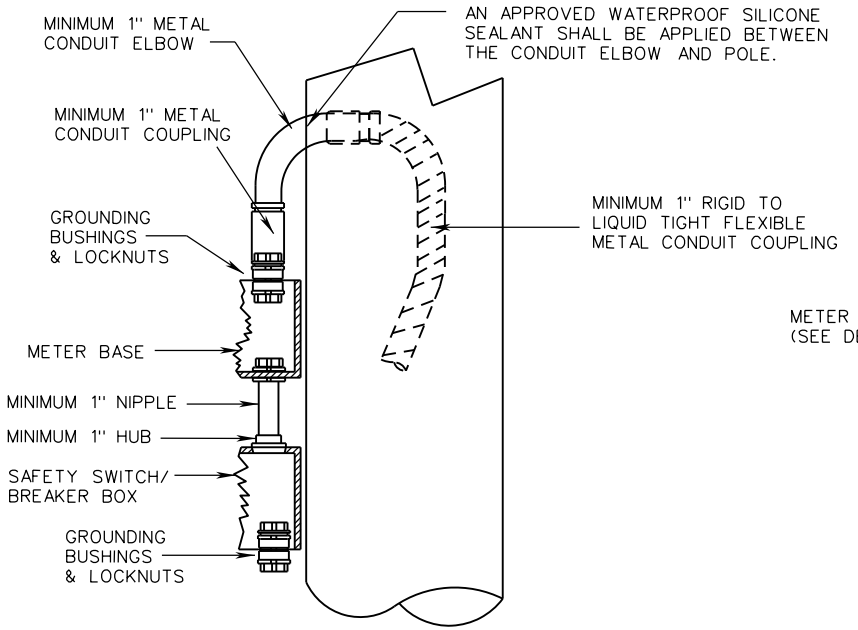

DETAIL FOR CONNECTION OF CONDUIT TO METER BASE

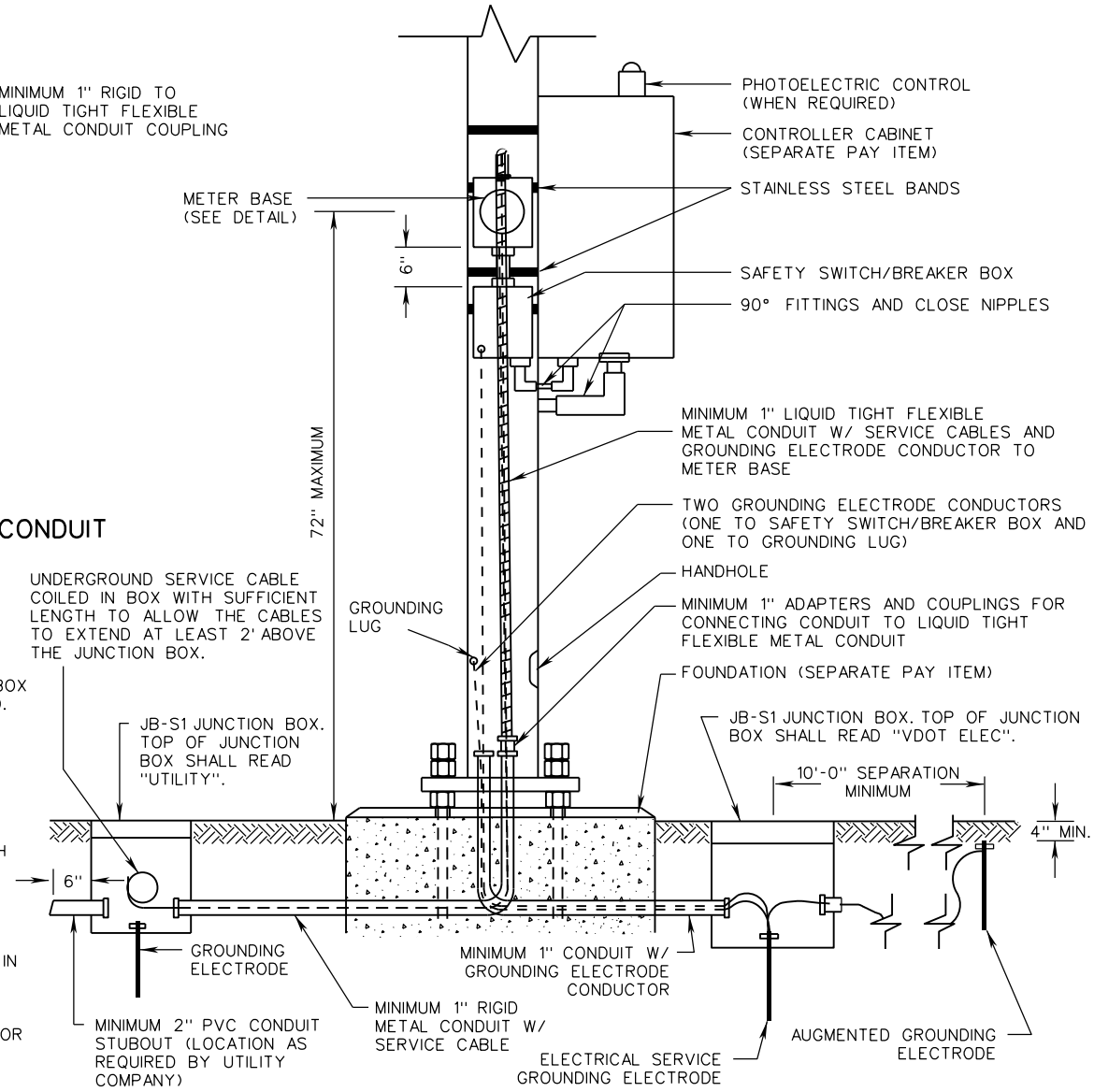

TYPE B (UNDERGROUND SERVICE) METAL POLE

NOTES:

1. LOCAL POWER UTILITY COMPANY WILL INSTALL SERVICE CABLE FROM THEIR POWER SOURCE TO THE JUNCTION BOX AND MAKE REQUIRED SPLICES TO THE CABLES PROVIDED.
2. POLE HEIGHT AND SIZE SHALL BE AS SPECIFIED IN THE CONTRACT DOCUMENTS.
3. THIS STANDARD IS APPLICABLE FOR ALL ELECTRICAL SERVICES OTHER THAN 480Y/277.
4. FOR ROADWAY LIGHTING SYSTEMS, ONLY SAFETY SWITCH SHALL BE USED.
5. ALL ELECTRICAL CONNECTIONS AND SPLICES SHALL BE TESTED FOR ELECTRICAL CONTINUITY.
6. CONDUIT AND CONDUCTOR SIZE SHALL BE AS SPECIFIED IN THE CONTRACT DOCUMENTS.
7. RIGID METAL RISER CONDUIT AND SERVICE CABLE SIZE SHALL BE AS SPECIFIED IN THE CONTRACT DOCUMENTS, OR AS SPECIFIED BY THE LOCAL POWER COMPANY.
8. WHEN REQUIRED BY THE CONTRACT DOCUMENTS, AN ELECTRICAL SERVICE WORK PAD SHALL BE PLACED IN FRONT OF THE SAFETY SWITCH/BREAKER BOX. ELECTRICAL SERVICE WORK PAD SHALL BE A SEPARATE PAY ITEM.

SPECIFICATION REFERENCE	A COPY OF THE ORIGINAL SEALED AND SIGNED DRAWING IS ON FILE IN THE CENTRAL OFFICE.	VDOT ROAD AND BRIDGE STANDARDS	
700	ELECTRICAL SERVICE INSTALLATION DETAILS VIRGINIA DEPARTMENT OF TRANSPORTATION	REVISION DATE 02/16	SHEET 2 OF 2 1312.11

SE-2

NOTES:

1. LOCAL POWER UTILITY COMPANY WILL INSTALL SERVICE CABLE FROM THEIR POWER SOURCE TO THE TOP OF THE OVERHEAD SERVICE POLE (FOR TYPE A OVERHEAD SERVICE) OR THE JUNCTION BOX (FOR TYPE B UNDERGROUND SERVICE) AND MAKE REQUIRED SPLICES TO THE CABLES PROVIDED.
2. POLE HEIGHT AND SIZE WILL BE AS SPECIFIED IN THE CONTRACT DOCUMENTS.
3. THIS STANDARD IS APPLICABLE FOR ALL ELECTRICAL SERVICES OTHER THAN 480Y/277.
4. FOR ROADWAY LIGHTING SYSTEMS, ONLY SAFETY SWITCH SHALL BE USED.
5. ALL ELECTRICAL CONNECTIONS AND SPLICES SHALL BE TESTED FOR ELECTRICAL CONTINUITY.
6. CONDUIT AND CONDUCTOR SIZE SHALL BE AS SPECIFIED IN THE CONTRACT DOCUMENTS.
7. RIGID METAL RISER CONDUIT AND SERVICE CABLE SIZE SHALL BE AS SPECIFIED IN THE CONTRACT DOCUMENTS, OR AS SPECIFIED BY THE LOCAL POWER COMPANY.
8. WHEN REQUIRED BY THE CONTRACT DOCUMENTS, AN ELECTRICAL SERVICE WORK PAD SHALL BE PLACED IN FRONT OF THE SAFETY SWITCH/BREAKER BOX. ELECTRICAL SERVICE WORK PAD SHALL BE A SEPARATE PAY ITEM.

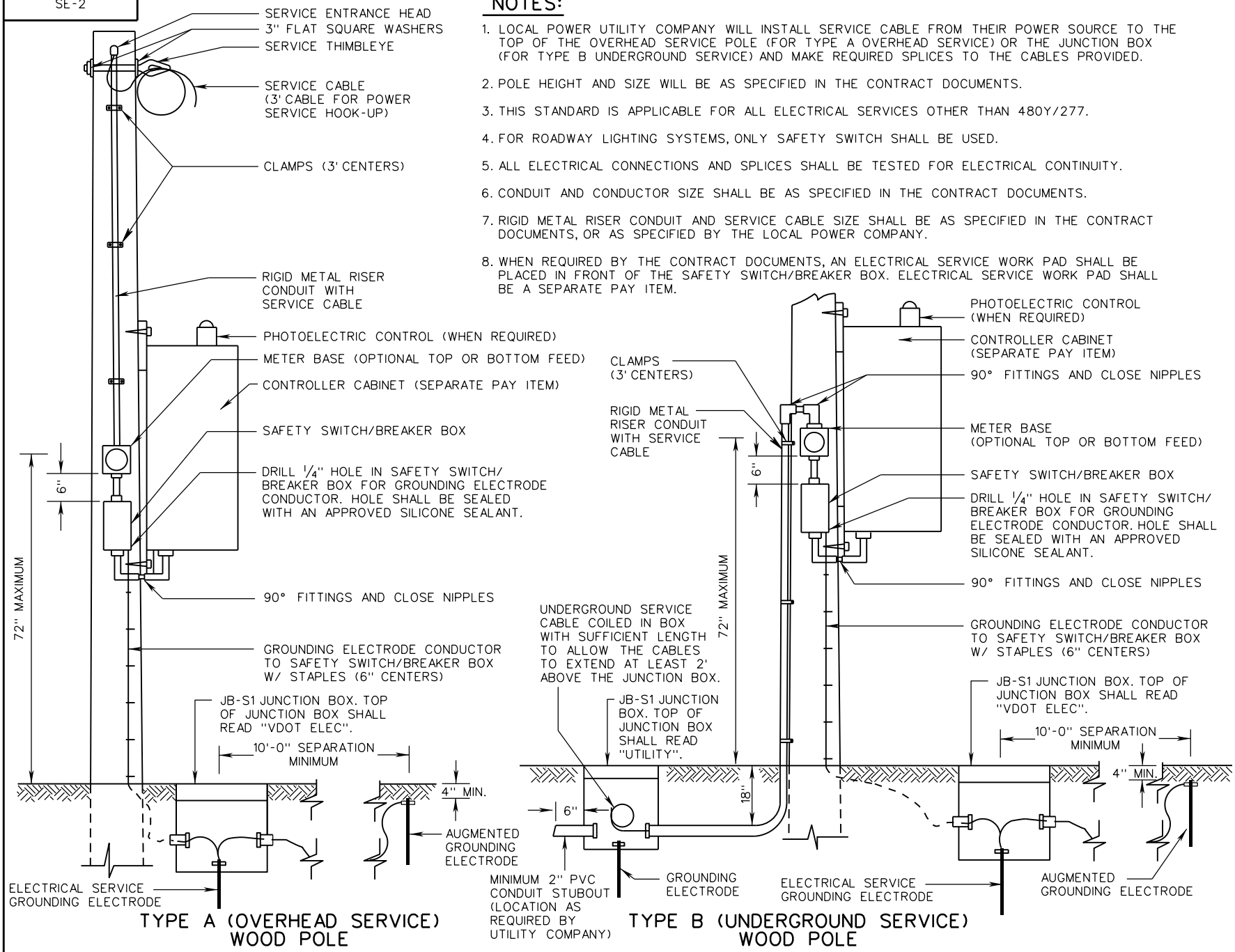

VDOT ROAD AND BRIDGE STANDARDS	A COPY OF THE ORIGINAL SEALED AND SIGNED DRAWING IS ON FILE IN THE CENTRAL OFFICE.	SPECIFICATION REFERENCE
SHEET 1 OF 1	ELECTRICAL SERVICE	
1312.20	INSTALLATION DETAILS	700
REVISION DATE 02/16	VIRGINIA DEPARTMENT OF TRANSPORTATION	

SE-3

NOTES:

1. LOCAL POWER UTILITY COMPANY WILL INSTALL SERVICE CABLE FROM THEIR POWER SOURCE TO THE TOP OF THE OVERHEAD SERVICE POLE AND MAKE REQUIRED SPLICES TO THE CABLES PROVIDED.
2. POLE HEIGHT AND SIZE WILL BE AS SPECIFIED IN THE CONTRACT DOCUMENTS.
3. THIS STANDARD IS APPLICABLE FOR ALL ELECTRICAL SERVICES OTHER THAN 480Y/277.
4. FOR ROADWAY LIGHTING SYSTEMS, ONLY SAFETY SWITCH SHALL BE USED.
5. ALL ELECTRICAL CONNECTIONS AND SPLICES SHALL BE TESTED FOR ELECTRICAL CONTINUITY.
6. CONDUIT AND CONDUCTOR SIZE SHALL BE AS SPECIFIED IN THE CONTRACT DOCUMENTS.
7. RIGID METAL RISER CONDUIT AND SERVICE CABLE SIZE SHALL BE AS SPECIFIED IN THE CONTRACT DOCUMENTS, OR AS SPECIFIED BY THE LOCAL POWER COMPANY.
8. WHEN REQUIRED BY THE CONTRACT DOCUMENTS, AN ELECTRICAL SERVICE WORK PAD SHALL BE PLACED IN FRONT OF THE SAFETY SWITCH/BREAKER BOX. ELECTRICAL SERVICE WORK PAD SHALL BE A SEPARATE PAY ITEM.
9. POLE AND CONTROLLER CABINET WILL BE SEPARATE PAY ITEMS.

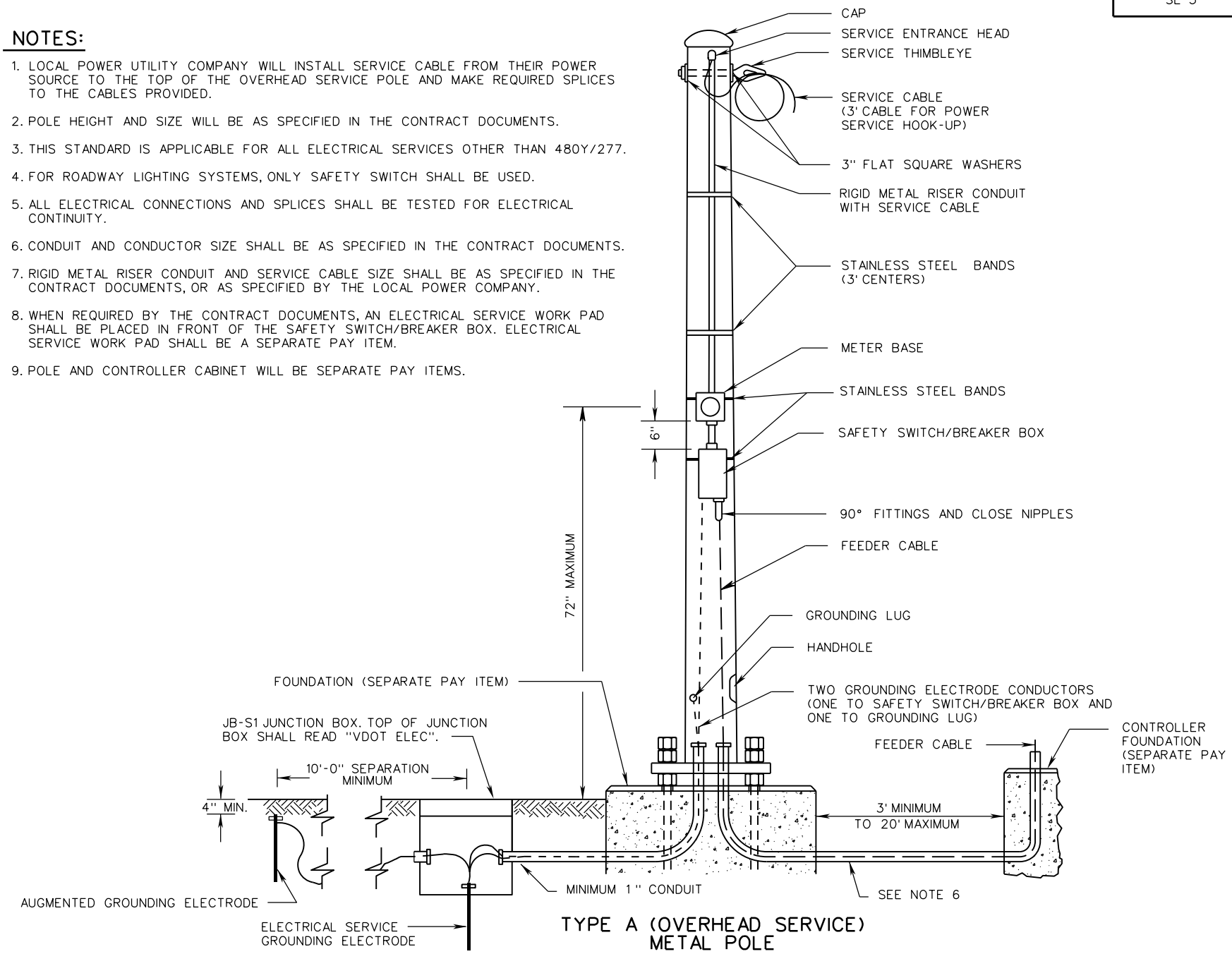

TYPE A (OVERHEAD SERVICE) METAL POLE

SPECIFICATION REFERENCE	A COPY OF THE ORIGINAL SEALED AND SIGNED DRAWING IS ON FILE IN THE CENTRAL OFFICE.	VDOT ROAD AND BRIDGE STANDARDS	
700	ELECTRICAL SERVICE INSTALLATION DETAILS VIRGINIA DEPARTMENT OF TRANSPORTATION	REVISION DATE 02/16	SHEET 1 OF 2 1312.30

SE-3

NOTES:

1. LOCAL POWER UTILITY COMPANY WILL INSTALL SERVICE CABLE FROM THEIR POWER SOURCE TO THE JUNCTION BOX AND MAKE REQUIRED SPLICES TO THE CABLES PROVIDED.
2. POLE HEIGHT AND SIZE WILL BE AS SPECIFIED IN THE CONTRACT DOCUMENTS.
3. THIS STANDARD IS APPLICABLE FOR ALL ELECTRICAL SERVICES OTHER THAN 480Y/277.
4. FOR ROADWAY LIGHTING SYSTEMS, ONLY SAFETY SWITCH SHALL BE USED.
5. ALL ELECTRICAL CONNECTIONS AND SPLICES SHALL BE TESTED FOR ELECTRICAL CONTINUITY.
6. CONDUIT AND CONDUCTOR SIZE SHALL BE AS SPECIFIED IN THE CONTRACT DOCUMENTS.
7. RIGID METAL RISER CONDUIT AND SERVICE CABLE SIZE SHALL BE AS SPECIFIED IN THE CONTRACT DOCUMENTS, OR AS SPECIFIED BY THE LOCAL POWER COMPANY.
8. WHEN REQUIRED BY THE CONTRACT DOCUMENTS, AN ELECTRICAL SERVICE WORK PAD SHALL BE PLACED IN FRONT OF THE SAFETY SWITCH/BREAKER BOX. ELECTRICAL SERVICE WORK PAD SHALL BE A SEPARATE PAY ITEM.

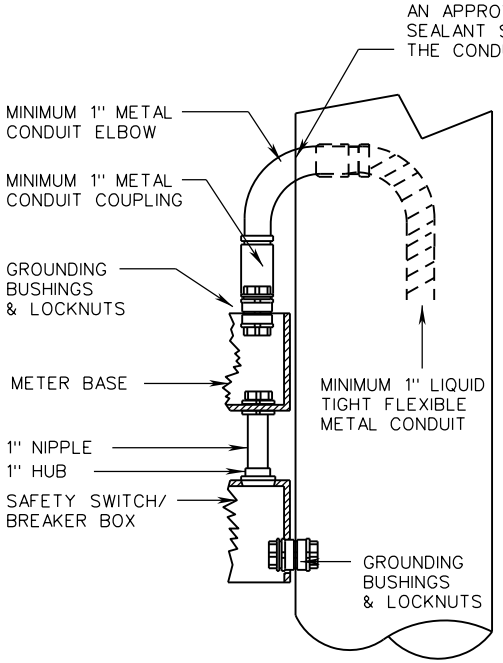

DETAIL FOR CONNECTION OF CONDUIT TO METER BASE

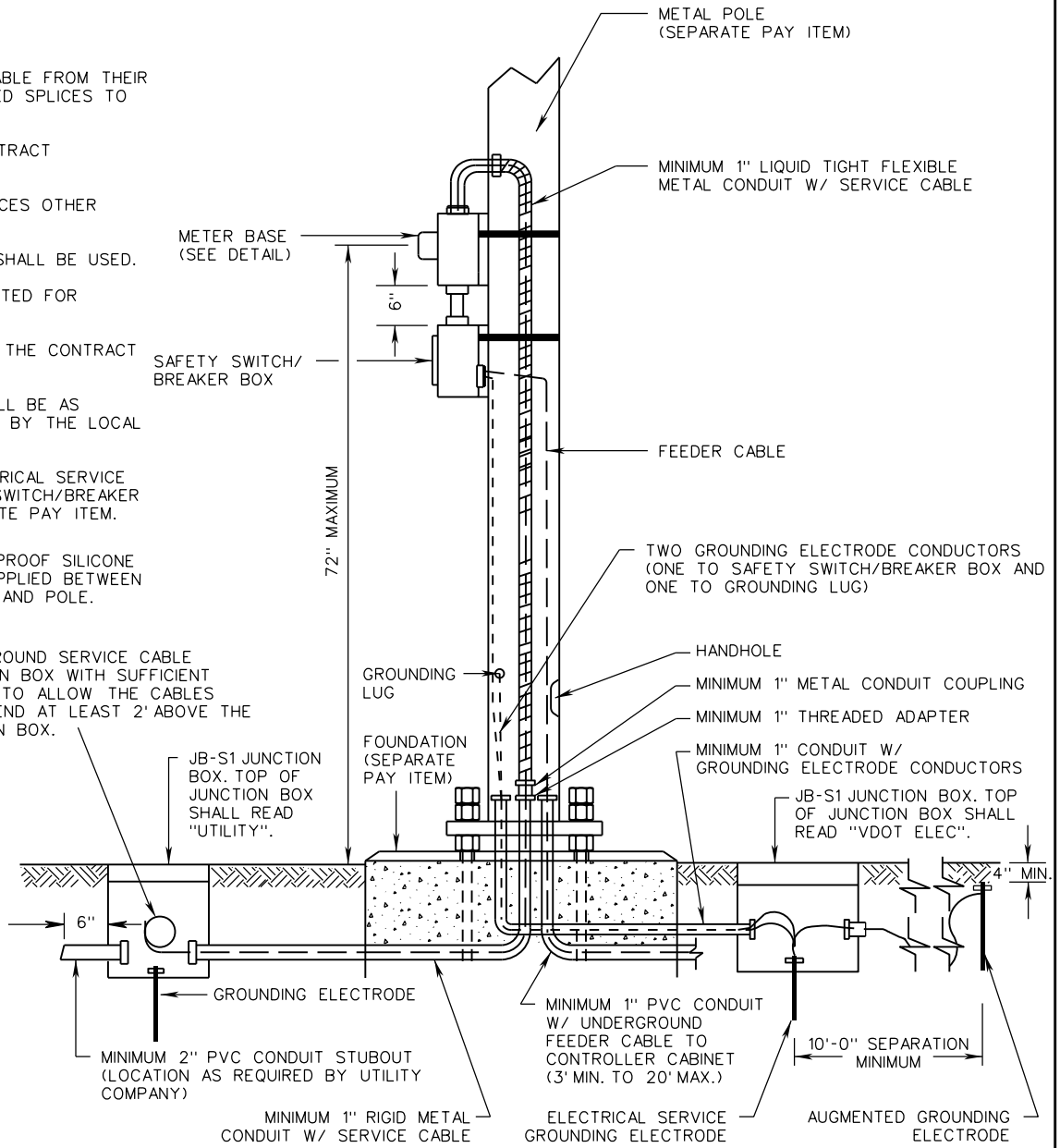

TYPE B (UNDERGROUND SERVICE) METAL POLE

VDOT ROAD AND BRIDGE STANDARDS	A COPY OF THE ORIGINAL SEALED AND SIGNED DRAWING IS ON FILE IN THE CENTRAL OFFICE.	SPECIFICATION REFERENCE
SHEET 2 OF 2	ELECTRICAL SERVICE	
REVISION DATE 02/16	INSTALLATION DETAILS	700
1312.31	VIRGINIA DEPARTMENT OF TRANSPORTATION	

SE-4

NOTES:

1. LOCAL POWER UTILITY COMPANY WILL INSTALL SERVICE CABLE FROM THEIR POWER SOURCE TO THE TOP OF THE OVERHEAD SERVICE POLE (FOR TYPE A OVERHEAD SERVICE) OR THE JUNCTION BOX (FOR TYPE B UNDERGROUND SERVICE) AND MAKE REQUIRED SPLICES TO THE CABLES PROVIDED.
2. POLE HEIGHT AND SIZE WILL BE AS SPECIFIED IN THE CONTRACT DOCUMENTS.
3. THIS STANDARD IS APPLICABLE FOR ALL ELECTRICAL SERVICES OTHER THAN 480Y/277.
4. FOR ROADWAY LIGHTING SYSTEMS, ONLY SAFETY SWITCH SHALL BE USED.
5. ALL ELECTRICAL CONNECTIONS AND SPLICES SHALL BE TESTED FOR ELECTRICAL CONTINUITY.
6. CONDUIT AND CONDUCTOR SIZE SHALL BE AS SPECIFIED IN THE CONTRACT DOCUMENTS.
7. RIGID METAL RISER CONDUIT AND SERVICE CABLE SIZE SHALL BE AS SPECIFIED IN THE CONTRACT DOCUMENTS, OR AS SPECIFIED BY THE LOCAL POWER COMPANY.
8. WHEN REQUIRED BY THE CONTRACT DOCUMENTS, AN ELECTRICAL SERVICE WORK PAD SHALL BE PLACED IN FRONT OF THE SAFETY SWITCH/BREAKER BOX. ELECTRICAL SERVICE WORK PAD SHALL BE A SEPARATE PAY ITEM.

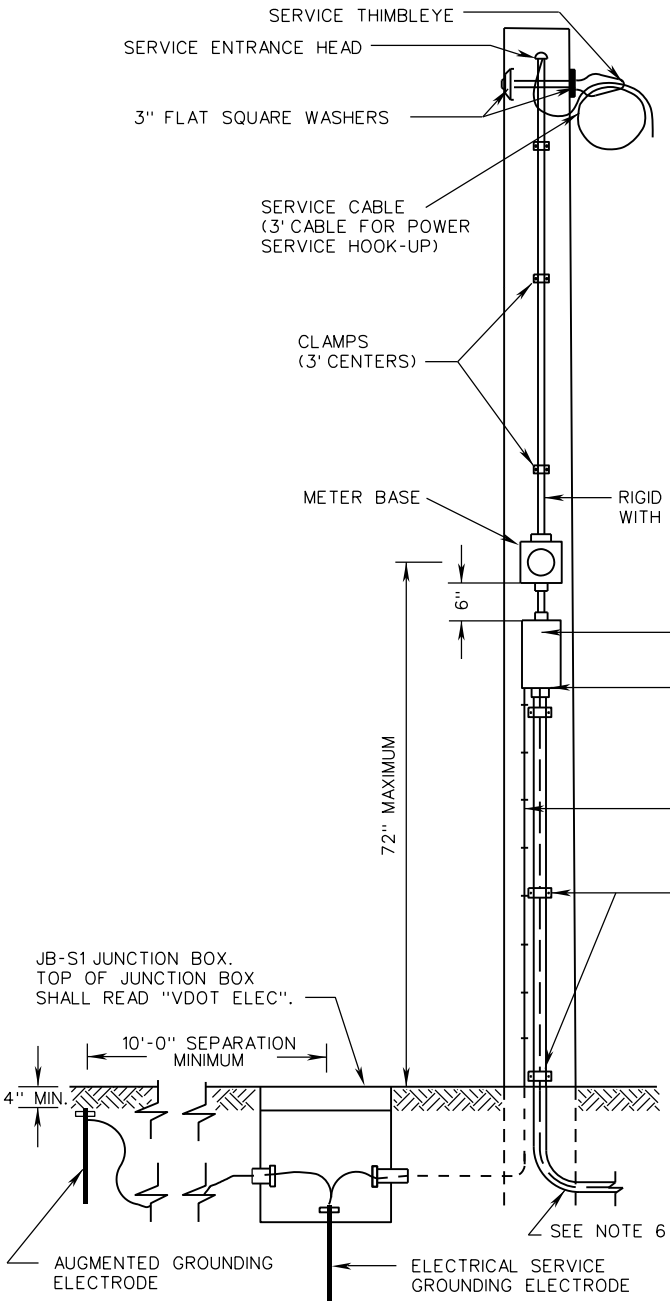

TYPE A (OVERHEAD SERVICE) WOOD POLE

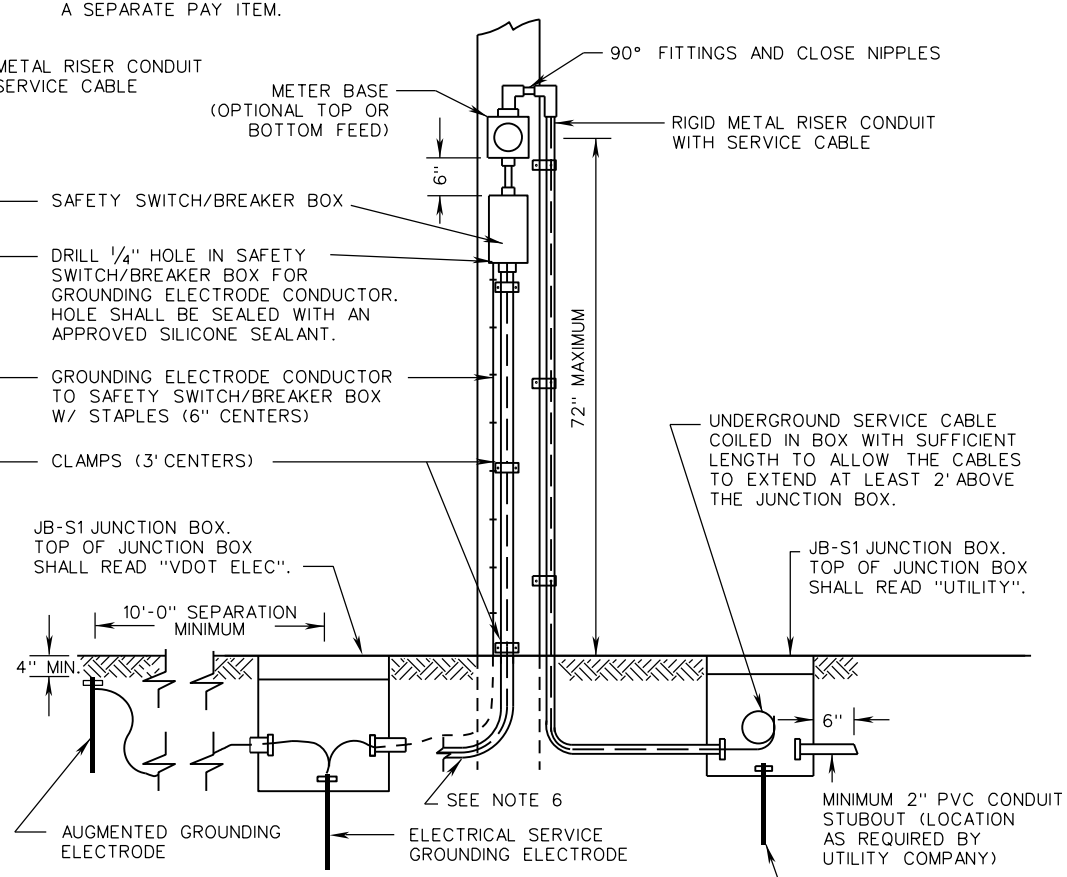

TYPE B (UNDERGROUND SERVICE) WOOD POLE

SPECIFICATION REFERENCE	A COPY OF THE ORIGINAL SEALED AND SIGNED DRAWING IS ON FILE IN THE CENTRAL OFFICE.	VDOT ROAD AND BRIDGE STANDARDS
700	ELECTRICAL SERVICE INSTALLATION DETAILS VIRGINIA DEPARTMENT OF TRANSPORTATION	REVISION DATE 02/16 — SHEET 1 OF 1 — 1312.40

SE-5

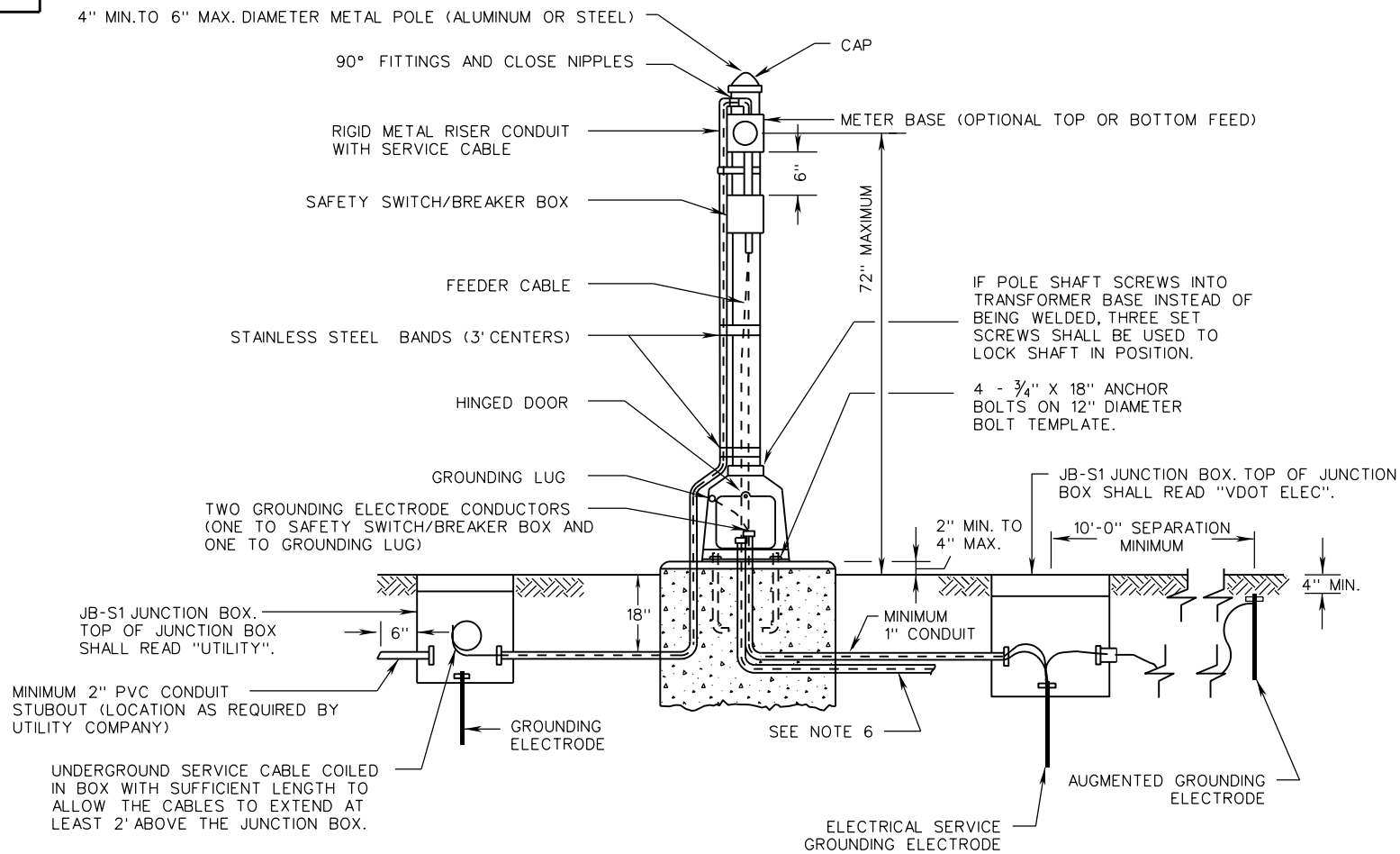

NOTES:

1. LOCAL POWER UTILITY COMPANY WILL INSTALL SERVICE CABLE FROM THEIR POWER SOURCE TO THE JUNCTION BOX AND MAKE REQUIRED SPLICES TO THE CABLES PROVIDED.
2. THIS STANDARD IS APPLICABLE FOR ALL ELECTRICAL SERVICES OTHER THAN 480Y/277.
3. FOR ROADWAY LIGHTING SYSTEMS, ONLY SAFETY SWITCH SHALL BE USED.
4. ALL ELECTRICAL CONNECTIONS AND SPLICES SHALL BE TESTED FOR ELECTRICAL CONTINUITY.
5. FOUNDATION SHALL BE CLASS A3 CONCRETE, 24X24 SQUARE OR 24" DIAMETER AND 24" DEEP, AND COST OF FOUNDATION SHALL BE INCLUDED WITH THE PAY ITEM FOR ELECTRICAL SERVICE.
6. CONDUIT AND CONDUCTOR SIZE SHALL BE AS SPECIFIED IN THE CONTRACT DOCUMENTS.
7. RIGID METAL RISER CONDUIT AND SERVICE CABLE SIZE SHALL BE AS SPECIFIED IN THE CONTRACT DOCUMENTS, OR AS SPECIFIED BY THE LOCAL POWER COMPANY.
8. WHEN REQUIRED BY THE CONTRACT DOCUMENTS, AN ELECTRICAL SERVICE WORK PAD SHALL BE PLACED IN FRONT OF THE SAFETY SWITCH/BREAKER BOX. ELECTRICAL SERVICE WORK PAD SHALL BE A SEPARATE PAY ITEM.
9. STAINLESS STEEL BANDS REQUIRED FOR METER BASE AND SAFETY SWITCH/BREAKER BOX.
10. ANCHOR BOLTS AND BOLT TEMPLATE SHALL BE FURNISHED BY POLE MANUFACTURER, AND POLE SHALL BE CENTERED ON FOUNDATION.

VDOT ROAD AND BRIDGE STANDARDS	A COPY OF THE ORIGINAL SEALED AND SIGNED DRAWING IS ON FILE IN THE CENTRAL OFFICE. ELECTRICAL SERVICE INSTALLATION DETAILS VIRGINIA DEPARTMENT OF TRANSPORTATION	SPECIFICATION REFERENCE
SHEET 1 OF 1 1312.50	REVISION DATE 02/16	700

SE-6

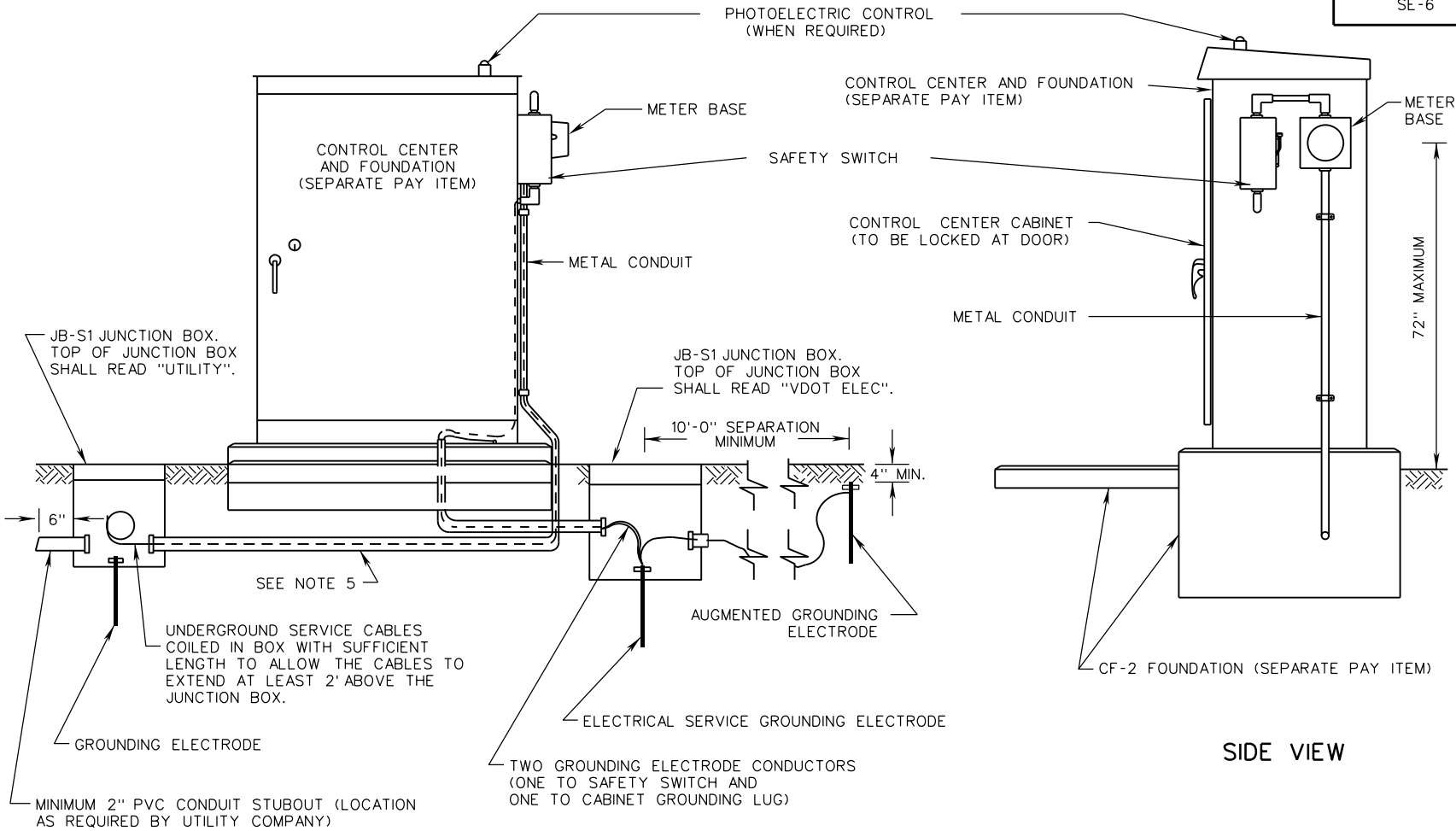

NOTES:

1. LOCAL POWER UTILITY COMPANY WILL INSTALL SERVICE CABLE FROM THEIR POWER SOURCE TO THE JUNCTION BOX AND MAKE REQUIRED SPLICES TO THE CABLES PROVIDED.
2. THIS STANDARD IS APPLICABLE FOR ALL ELECTRICAL SERVICES OTHER THAN 480Y/277.
3. ALL ELECTRICAL CONNECTIONS AND SPLICES SHALL BE TESTED FOR ELECTRICAL CONTINUITY.
4. THE CONDUIT AND SERVICE CABLE SHALL EXTEND FROM THE CABINET TO THE UTILITY JUNCTION BOX.
5. CONDUIT AND CONDUCTOR SIZE SHALL BE AS SPECIFIED IN THE CONTRACT DOCUMENTS.
6. RIGID METAL RISER CONDUIT AND SERVICE CABLE SIZE SHALL BE AS SPECIFIED IN THE CONTRACT DOCUMENTS, OR AS SPECIFIED BY THE LOCAL POWER COMPANY.
7. WHEN REQUIRED BY THE CONTRACT DOCUMENTS, AN ELECTRICAL SERVICE WORK PAD SHALL BE PLACED IN FRONT OF THE SAFETY SWITCH/BREAKER BOX. ELECTRICAL SERVICE WORK PAD SHALL BE A SEPARATE PAY ITEM.

SPECIFICATION REFERENCE	A COPY OF THE ORIGINAL SEALED AND SIGNED DRAWING IS ON FILE IN THE CENTRAL OFFICE.	VDOT ROAD AND BRIDGE STANDARDS	
700	ELECTRICAL SERVICE INSTALLATION DETAILS VIRGINIA DEPARTMENT OF TRANSPORTATION	REVISION DATE 02/16	SHEET 1 OF 1 1312.60

SE-7

NOTES:

1. LOCAL POWER UTILITY COMPANY WILL INSTALL SERVICE POWER UTILITY CABLE FROM THEIR POWER SOURCE TO THE JUNCTION BOX AND MAKE REQUIRED SPLICES TO THE CABLES PROVIDED.
2. THIS STANDARD IS APPLICABLE FOR ALL ELECTRICAL SERVICES OTHER THAN 480Y/277.
3. FOR ROADWAY LIGHTING SYSTEMS, ONLY SAFETY SWITCH SHALL BE USED.
4. ALL ELECTRICAL CONNECTIONS AND SPLICES SHALL BE TESTED FOR ELECTRICAL CONTINUITY.
5. CONDUIT AND CONDUCTOR SIZE SHALL BE AS SPECIFIED IN THE CONTRACT DOCUMENTS.
6. RIGID METAL RISER CONDUIT AND SERVICE CABLE SIZE SHALL BE AS SPECIFIED IN THE CONTRACT DOCUMENTS, OR AS SPECIFIED BY THE LOCAL POWER COMPANY.
7. WHEN REQUIRED BY THE CONTRACT DOCUMENTS, AN ELECTRICAL SERVICE WORK PAD SHALL BE PLACED IN FRONT OF THE SAFETY SWITCH/BREAKER BOX. ELECTRICAL SERVICE WORK PAD SHALL BE A SEPARATE PAY ITEM.
8. RIGID MINIMUM 1" NIPPLE, THREADED AT BOTH ENDS, HELD IN PLACE WITH BONDING BUSHING AND LOCK NUT. ADDITIONAL 2" LAG SCREWS TO BE USED TO SECURE SAFETY SWITCH/BREAKER BOX AND METER BASE TO WOOD POST. FOUR SCREWS TO BE USED WITH EACH.

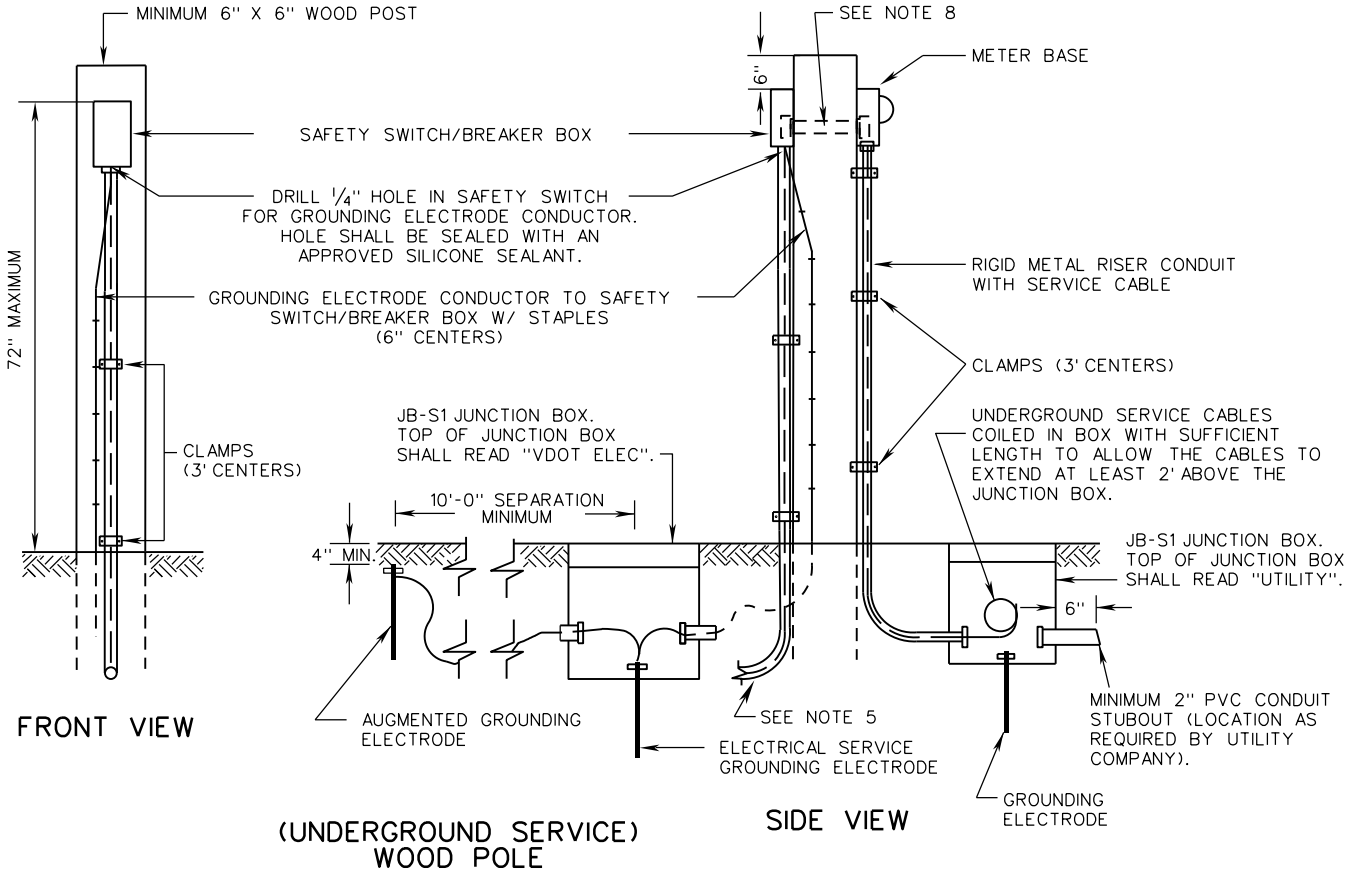

VDOT ROAD AND BRIDGE STANDARDS	A COPY OF THE ORIGINAL SEALED AND SIGNED DRAWING IS ON FILE IN THE CENTRAL OFFICE.	SPECIFICATION REFERENCE
SHEET 1 OF 1	ELECTRICAL SERVICE	
REVISION DATE 02/16	INSTALLATION DETAILS	700
1312.70	VIRGINIA DEPARTMENT OF TRANSPORTATION	

SE-8

NOTES:

1. LOCAL POWER UTILITY COMPANY WILL INSTALL SERVICE CABLE FROM THEIR POWER SOURCE TO THE TOP OF THE OVERHEAD SERVICE POLE (FOR TYPE A OVERHEAD SERVICE) OR THE JUNCTION BOX (FOR TYPE B UNDERGROUND SERVICE) AND MAKE REQUIRED SPLICES TO THE CABLES PROVIDED.
2. POLE HEIGHT AND SIZE WILL BE AS SPECIFIED IN THE CONTRACT DOCUMENTS.
3. THIS STANDARD IS APPLICABLE FOR ALL ELECTRICAL SERVICES OTHER THAN 480Y/277.
4. FOR ROADWAY LIGHTING SYSTEMS, ONLY SAFETY SWITCH SHALL BE USED.
5. ALL ELECTRICAL CONNECTIONS AND SPLICES SHALL BE TESTED FOR ELECTRICAL CONTINUITY.
6. CONDUIT AND CONDUCTOR SIZE SHALL BE AS SPECIFIED IN THE CONTRACT DOCUMENTS.
7. RIGID METAL RISER CONDUIT AND SERVICE CABLE SIZE SHALL BE AS SPECIFIED IN THE CONTRACT DOCUMENTS, OR AS SPECIFIED BY THE LOCAL POWER COMPANY.
8. WHEN REQUIRED BY THE CONTRACT DOCUMENTS, AN ELECTRICAL SERVICE WORK PAD SHALL BE PLACED IN FRONT OF THE SAFETY SWITCH/BREAKER BOX. ELECTRICAL SERVICE WORK PAD SHALL BE A SEPARATE PAY ITEM.

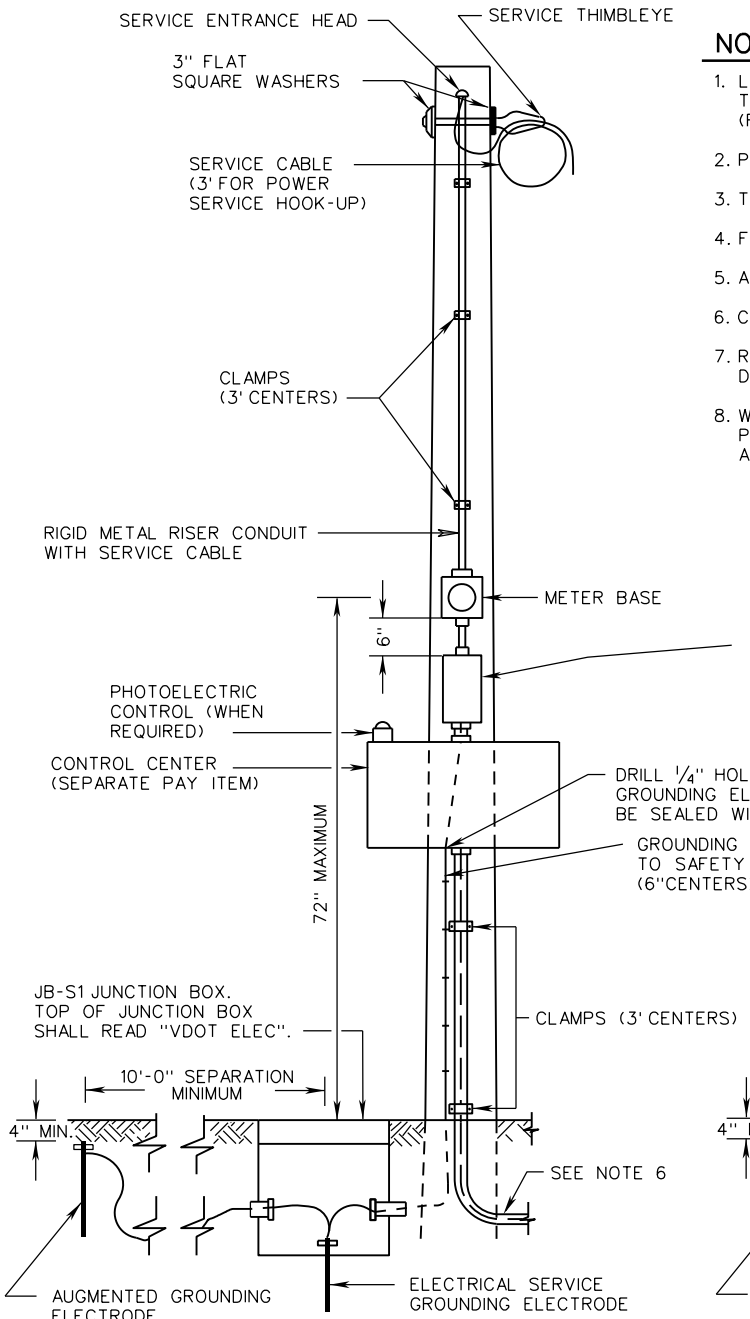

TYPE A (OVERHEAD SERVICE) WOOD POLE

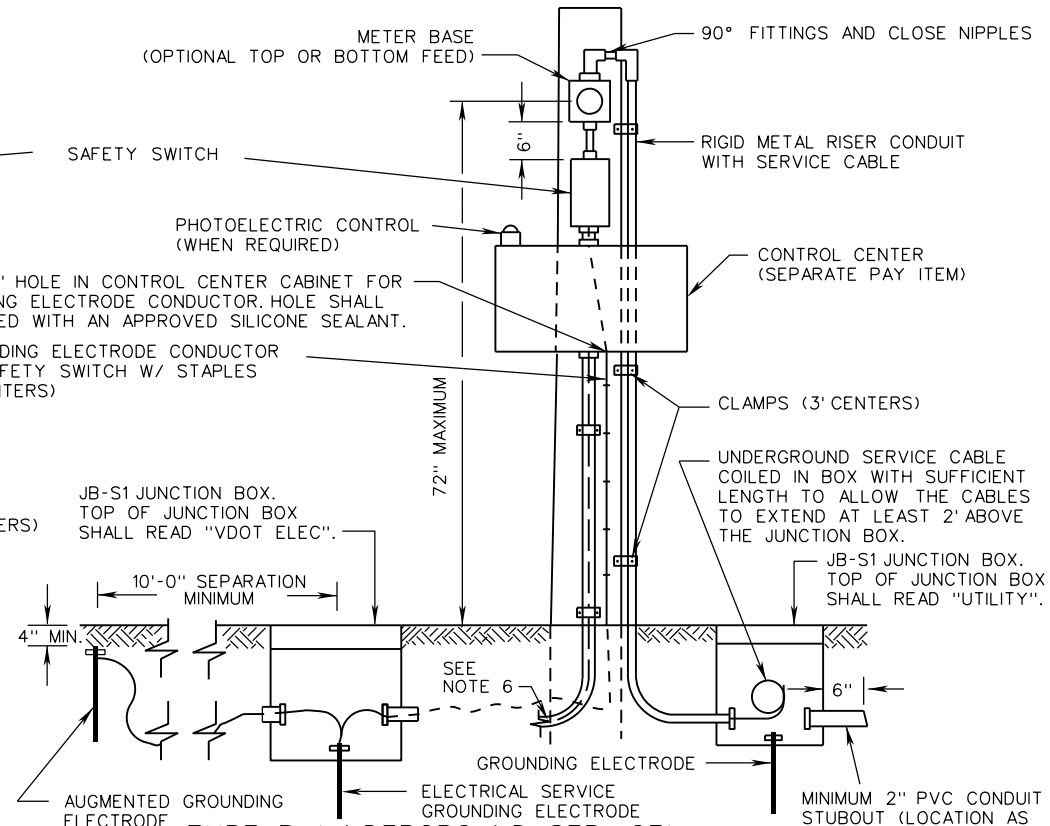

TYPE B (UNDERGROUND SERVICE) WOOD POLE

SPECIFICATION REFERENCE	A COPY OF THE ORIGINAL SEALED AND SIGNED DRAWING IS ON FILE IN THE CENTRAL OFFICE.	VDOT ROAD AND BRIDGE STANDARDS
700	ELECTRICAL SERVICE INSTALLATION DETAILS VIRGINIA DEPARTMENT OF TRANSPORTATION	REVISION DATE 02/16 — SHEET 1 OF 1 — 1312.80

SE-9

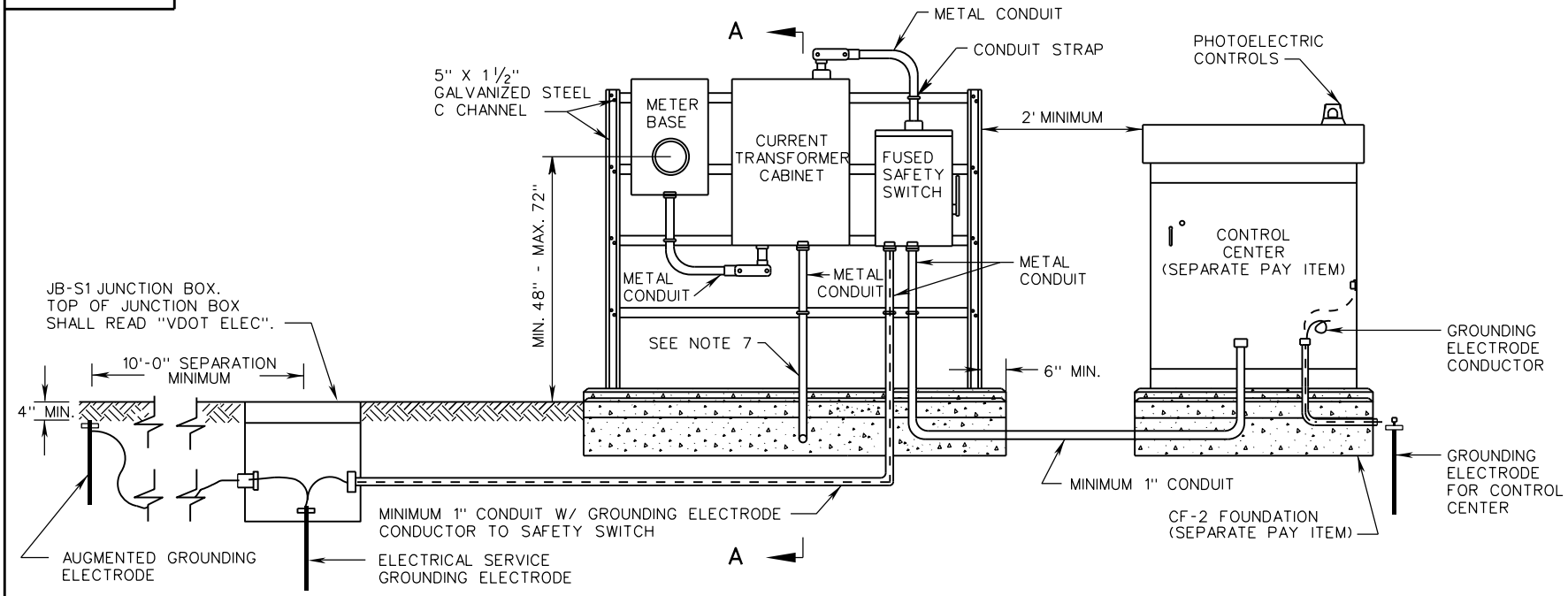

TYPE A

NOTES:

1. LOCAL POWER UTILITY COMPANY WILL INSTALL SERVICE CABLE FROM THEIR POWER SOURCE TO THE CURRENT TRANSFORMER CABINET AND METER BASE THEN MAKE REQUIRED SPLICES TO THE CABLES PROVIDED.
2. THIS STANDARD IS APPLICABLE FOR 480Y/277 ELECTRICAL SERVICE ONLY.
3. ALL ELECTRICAL CONNECTIONS AND SPLICES SHALL BE TESTED FOR ELECTRICAL CONTINUITY.
4. CONDUIT AND CONDUCTOR SIZE SHALL BE AS SPECIFIED IN THE CONTRACT DOCUMENTS.
5. RIGID METAL RISER CONDUIT AND SERVICE CABLE SIZE SHALL BE AS SPECIFIED IN THE CONTRACT DOCUMENTS, OR AS SPECIFIED BY THE LOCAL POWER COMPANY.
6. SAFETY SWITCH, METER BASE, WIREWAY, CURRENT TRANSFORMER CABINET AND CONTROL CENTER SHALL BE ATTACHED TO THE CHANNELING WITH ⅜" GALVANIZED BOLTS, LOCK WASHERS AND NUTS. FOUR CROSS CHANNELS SHALL BE UTILIZED.
7. MINIMUM 2" METAL CONDUIT SHALL BE STUBBED OUT 6" PAST CONCRETE FOUNDATION PAD. LOCATION OF THE STUBBED CONDUIT SHALL BE AS REQUIRED BY THE LOCAL POWER COMPANY.
8. THE CONTRACTOR SHALL LEAVE A SUFFICIENT AMOUNT OF CONDUCTOR CABLE COILED INSIDE THE CURRENT TRANSFORMER CABINET TO PERMIT THE LOCAL POWER COMPANY TO MAKE THEIR CONNECTION.
9. SERVICE ENTRANCE FOUNDATION, INCLUDING THE CONCRETE PAD, IS INCLUDED IN THE SE-9 PAY ITEM.

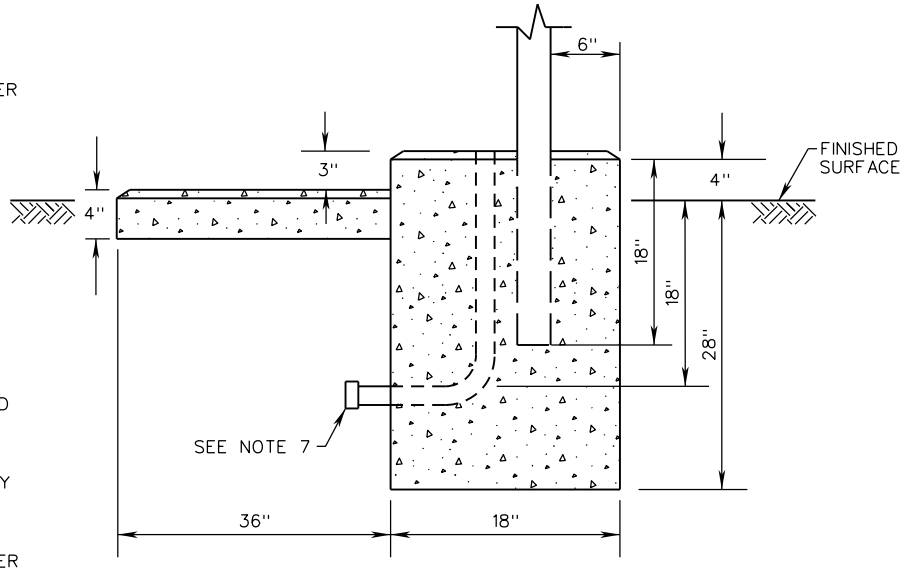

SECTION A-A
SERVICE ENTRANCE FOUNDATION DETAIL

VDOT
ROAD AND BRIDGE STANDARDS

SHEET 1 OF 2
1312.90

REVISION DATE
02/16

A COPY OF THE ORIGINAL SEALED AND SIGNED DRAWING IS ON FILE IN THE CENTRAL OFFICE.

ELECTRICAL SERVICE
INSTALLATION DETAILS

VIRGINIA DEPARTMENT OF TRANSPORTATION

SPECIFICATION REFERENCE
700

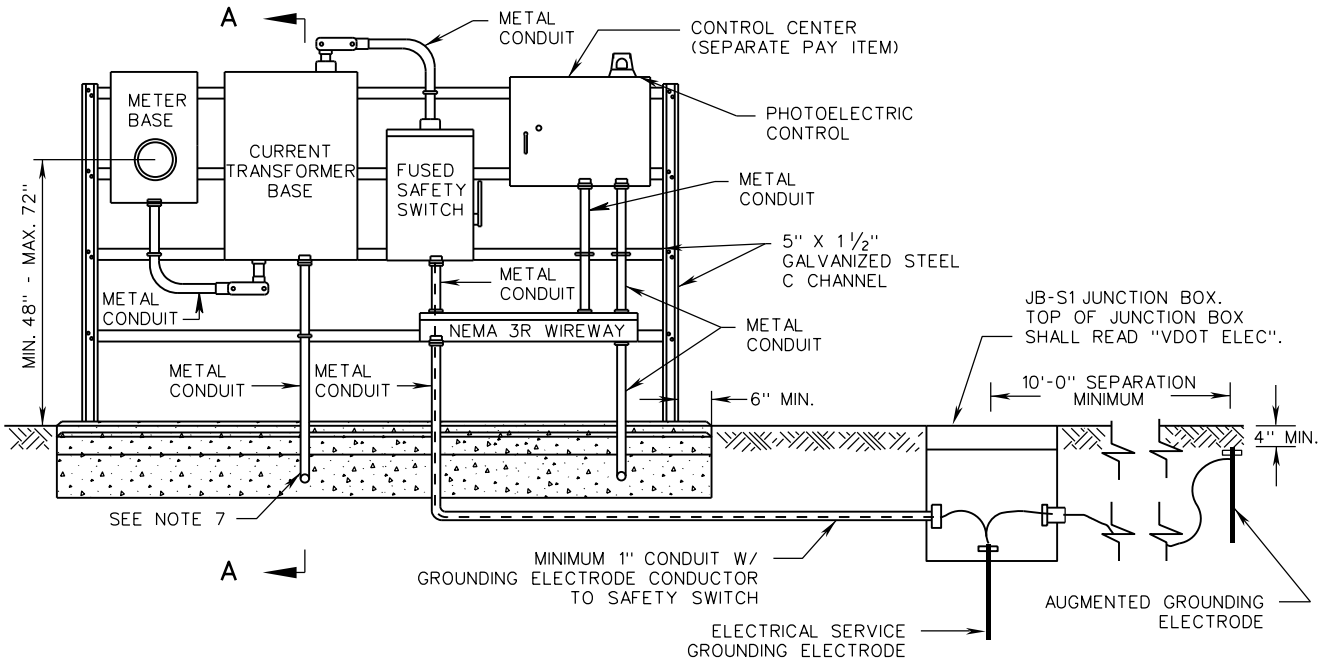

TYPE B

NOTES:

1. LOCAL POWER UTILITY COMPANY WILL INSTALL SERVICE CABLE FROM THEIR POWER SOURCE TO THE CURRENT TRANSFORMER CABINET AND METER BASE THEN MAKE REQUIRED SPLICES TO THE CABLES PROVIDED.
2. THIS STANDARD IS APPLICABLE FOR 480Y/277 ELECTRICAL SERVICE ONLY.
3. ALL ELECTRICAL CONNECTIONS AND SPLICES SHALL BE TESTED FOR ELECTRICAL CONTINUITY.
4. CONDUIT AND CONDUCTOR SIZE SHALL BE AS SPECIFIED IN THE CONTRACT DOCUMENTS.
5. RIGID METAL RISER CONDUIT AND SERVICE CABLE SIZE SHALL BE AS SPECIFIED IN THE CONTRACT DOCUMENTS, OR AS SPECIFIED BY THE LOCAL POWER COMPANY.
6. SAFETY SWITCH, METER BASE, WIREWAY, CURRENT TRANSFORMER CABINET AND CONTROL CENTER SHALL BE ATTACHED TO THE CHANNELING WITH 3/8" GALVANIZED BOLTS, LOCK WASHERS AND NUTS. FOUR CROSS CHANNELS SHALL BE UTILIZED.
7. MINIMUM 2" METAL CONDUIT SHALL BE STUBBED OUT 6" PAST CONCRETE FOUNDATION PAD. LOCATION OF THE STUBBED CONDUIT SHALL BE AS REQUIRED BY THE LOCAL POWER COMPANY.
8. THE CONTRACTOR SHALL LEAVE A SUFFICIENT AMOUNT OF CONDUCTOR CABLE COILED INSIDE THE CURRENT TRANSFORMER CABINET TO PERMIT THE LOCAL POWER COMPANY TO MAKE THEIR CONNECTION.
9. SERVICE ENTRANCE FOUNDATION, INCLUDING THE CONCRETE PAD, IS INCLUDED IN THE SE-9 PAY ITEM.

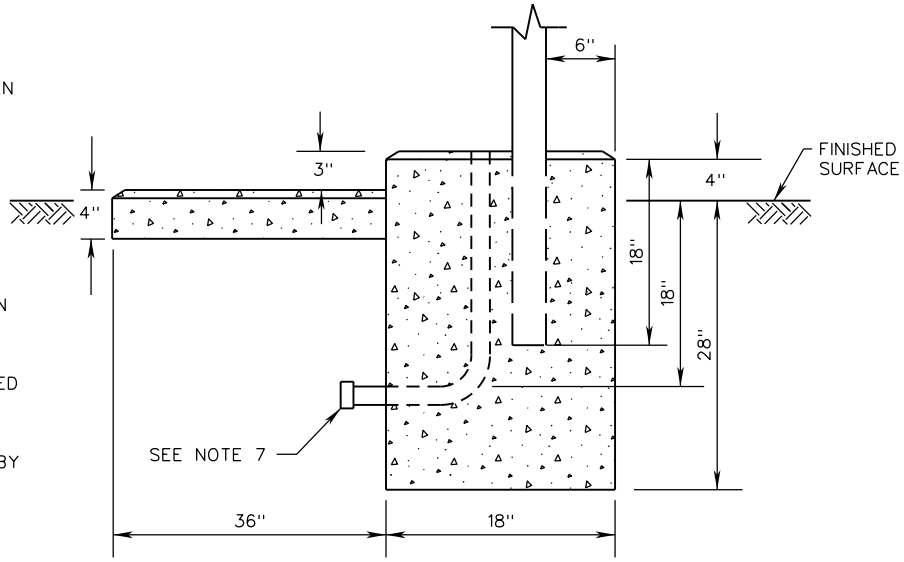

SECTION A-A
SERVICE ENTRANCE FOUNDATION DETAIL

SPECIFICATION REFERENCE	A COPY OF THE ORIGINAL SEALED AND SIGNED DRAWING IS ON FILE IN THE CENTRAL OFFICE.	VDOT ROAD AND BRIDGE STANDARDS	
700	ELECTRICAL SERVICE INSTALLATION DETAILS VIRGINIA DEPARTMENT OF TRANSPORTATION	REVISION DATE 02/16	SHEET 2 OF 2 1312.91

STANDARD

THIS PAGE INTENTIONALLY LEFT BLANK

VDOT
ROAD AND BRIDGE STANDARDS

SHEET 1 OF 1

REVISION DATE

TITLE

VIRGINIA DEPARTMENT OF TRANSPORTATION

SPECIFICATION REFERENCE

SE-10

NOTES:

1. LOCAL POWER UTILITY COMPANY WILL INSTALL SERVICE CABLE FROM THEIR POWER SOURCE TO THE TOP OF THE OVERHEAD SERVICE POLE (FOR TYPE A OVERHEAD SERVICE) OR THE JUNCTION BOX (FOR TYPE B UNDERGROUND SERVICE) AND MAKE REQUIRED SPLICES TO THE CABLES PROVIDED.
2. POLE HEIGHT AND SIZE WILL BE AS SPECIFIED IN THE CONTRACT DOCUMENTS.
3. THIS STANDARD IS APPLICABLE FOR ALL ELECTRICAL SERVICES OTHER THAN 480Y/277.
4. FOR ROADWAY LIGHTING SYSTEMS, ONLY SAFETY SWITCH SHALL BE USED.
5. ALL ELECTRICAL CONNECTIONS AND SPLICES SHALL BE TESTED FOR ELECTRICAL CONTINUITY.
6. CONDUIT AND CONDUCTOR SIZE SHALL BE AS SPECIFIED IN THE CONTRACT DOCUMENTS.
7. RIGID METAL RISER CONDUIT AND SERVICE CABLE SIZE SHALL BE AS SPECIFIED IN THE CONTRACT DOCUMENTS, OR AS SPECIFIED BY THE LOCAL POWER COMPANY.
8. WHEN REQUIRED BY THE CONTRACT DOCUMENTS, AN ELECTRICAL SERVICE WORK PAD SHALL BE PLACED IN FRONT OF THE SAFETY SWITCH/BREAKER BOX. ELECTRICAL SERVICE WORK PAD SHALL BE A SEPARATE PAY ITEM.

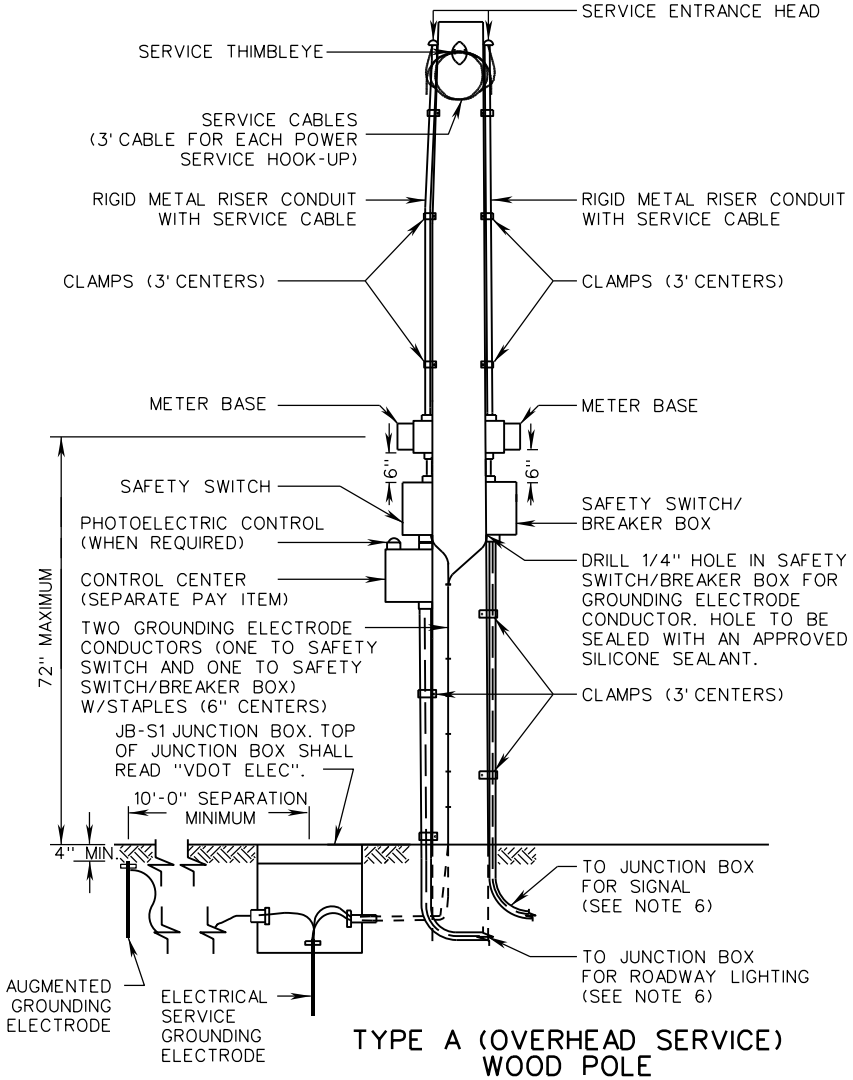

TYPE A (OVERHEAD SERVICE) WOOD POLE

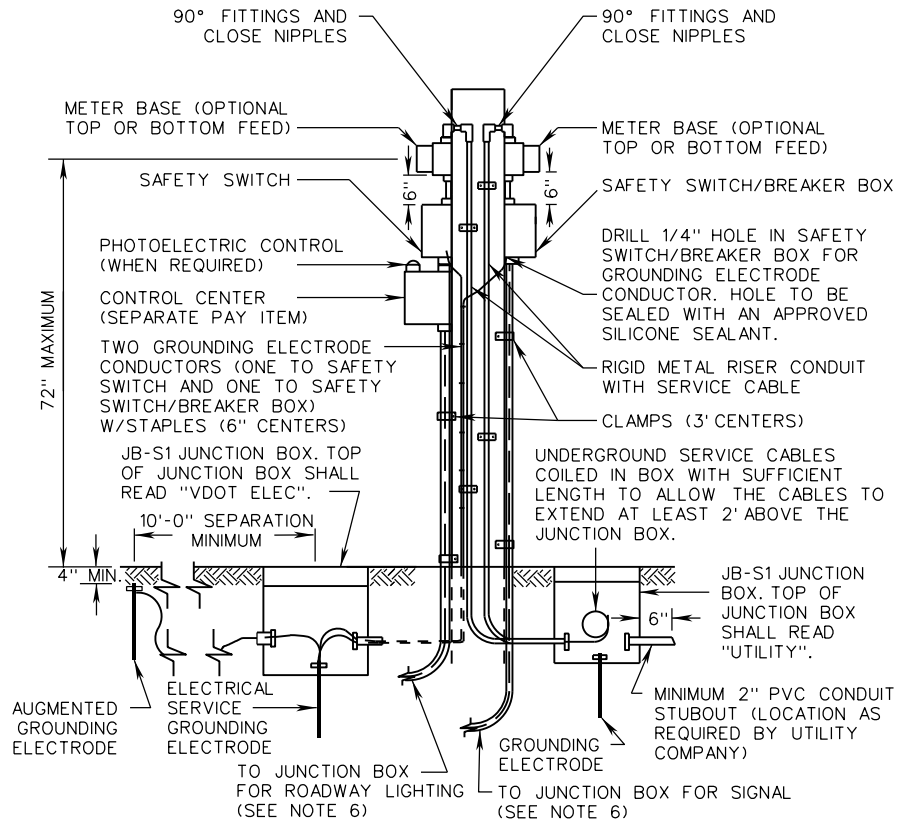

TYPE B (UNDERGROUND SERVICE) WOOD POLE

SPECIFICATION REFERENCE	A COPY OF THE ORIGINAL SEALED AND SIGNED DRAWING IS ON FILE IN THE CENTRAL OFFICE.	VDOT ROAD AND BRIDGE STANDARDS
700	ELECTRICAL SERVICE INSTALLATION DETAILS VIRGINIA DEPARTMENT OF TRANSPORTATION	REVISION DATE 02/16 · SHEET 1 OF 1 · 1313.10

SE-11

NOTES:

1. LOCAL POWER UTILITY COMPANY WILL INSTALL SERVICE CABLE FROM THEIR POWER SOURCE TO THE TOP OF THE OVERHEAD POLE AND MAKE REQUIRED SPLICES TO THE CABLES PROVIDED.
2. POLE HEIGHT AND SIZE WILL BE AS SPECIFIED IN THE CONTRACT DOCUMENTS.
3. THIS STANDARD IS APPLICABLE FOR ALL ELECTRICAL SERVICES OTHER THAN 480Y/277.
4. FOR ROADWAY LIGHTING SYSTEMS, ONLY SAFETY SWITCH SHALL BE USED.
5. ALL ELECTRICAL CONNECTIONS AND SPLICES SHALL BE TESTED FOR ELECTRICAL CONTINUITY.
6. EACH ELECTRICAL SERVICE FEEDER SHALL BE SEPARATED AND TAGGED IN ACCESSIBLE LOCATIONS INSIDE THE POLE TO PERMANENTLY IDENTIFY LIGHTING AND SIGNAL POWER CABLES.
7. CONDUIT AND CONDUCTOR SIZE SHALL BE AS SPECIFIED IN THE CONTRACT DOCUMENTS.
8. RIGID METAL RISER CONDUIT AND SERVICE CABLE SIZE SHALL BE AS SPECIFIED IN THE CONTRACT DOCUMENTS, OR AS SPECIFIED BY THE LOCAL POWER COMPANY.
9. WHEN REQUIRED BY THE CONTRACT DOCUMENTS, AN ELECTRICAL SERVICE WORK PAD SHALL BE PLACED IN FRONT OF THE SAFETY SWITCH/BREAKER BOX. ELECTRICAL SERVICE WORK PAD SHALL BE A SEPARATE PAY ITEM.

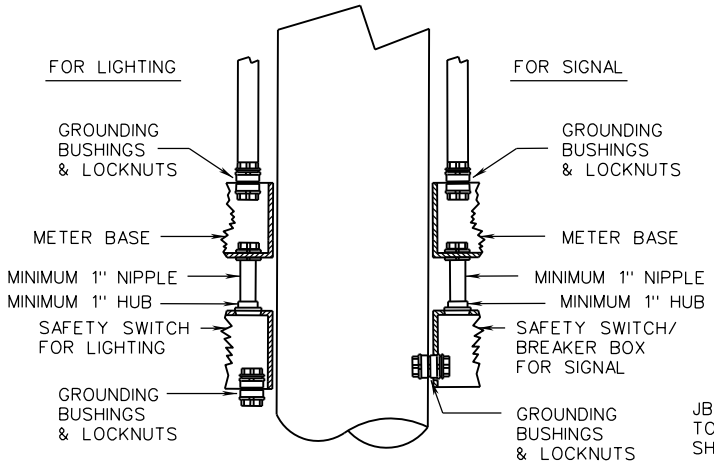

DETAIL FOR CONNECTION OF CONDUIT TO METER BASE FOR LIGHTING AND SIGNAL

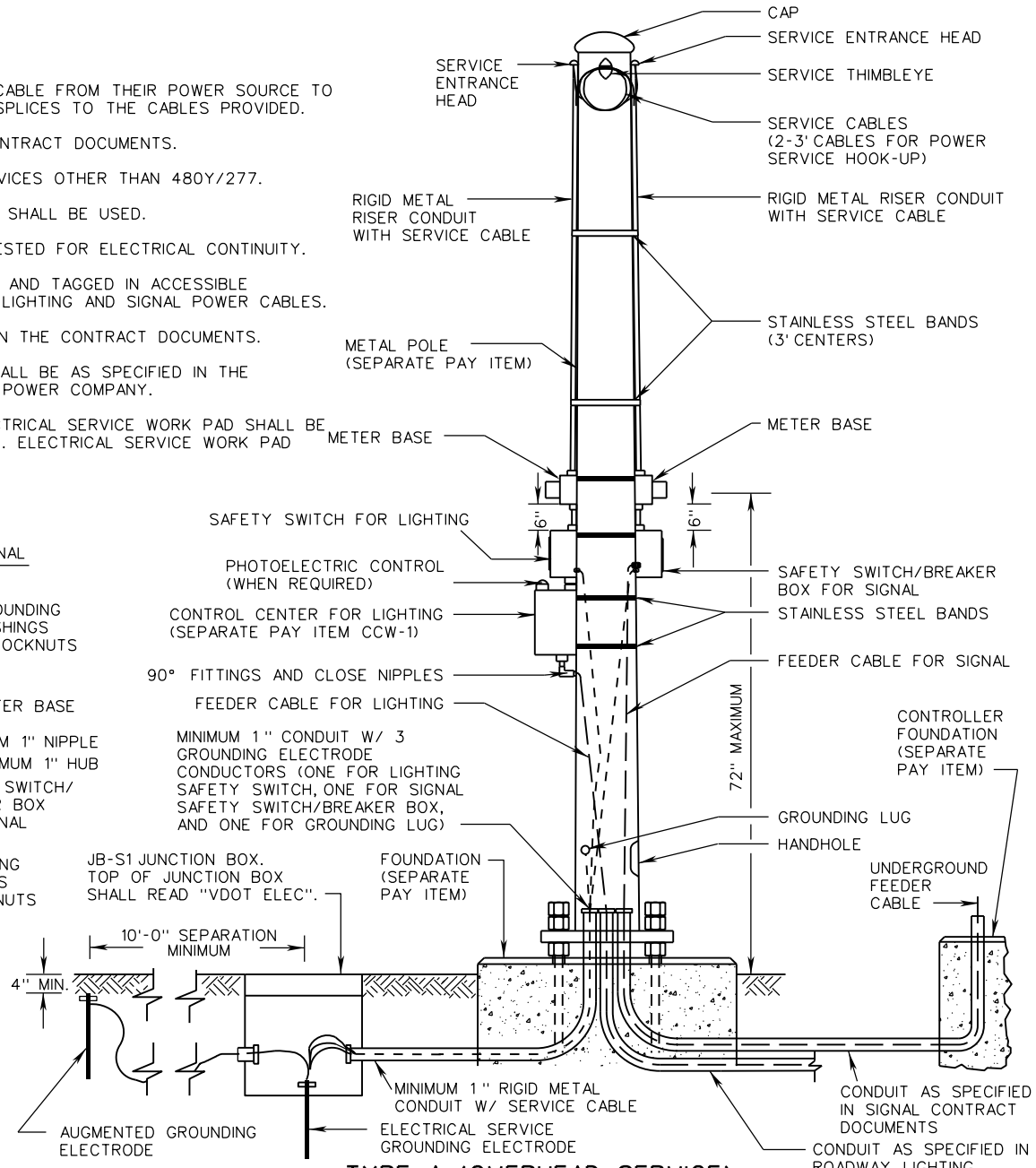

TYPE A (OVERHEAD SERVICE) METAL POLE

VDOT ROAD AND BRIDGE STANDARDS	A COPY OF THE ORIGINAL SEALED AND SIGNED DRAWING IS ON FILE IN THE CENTRAL OFFICE.	SPECIFICATION REFERENCE
SHEET 1 OF 2	ELECTRICAL SERVICE	
REVISION DATE 02/16	INSTALLATION DETAILS	700
1313.20	VIRGINIA DEPARTMENT OF TRANSPORTATION	

SE-11

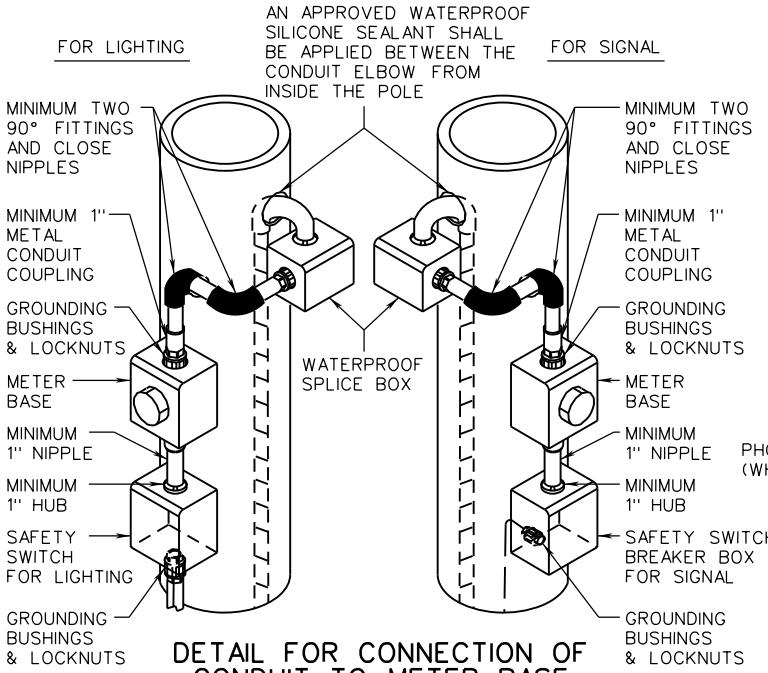

DETAIL FOR CONNECTION OF CONDUIT TO METER BASE FOR LIGHTING AND SIGNAL

NOTES:

1. LOCAL POWER UTILITY COMPANY WILL INSTALL SERVICE CABLE FROM THEIR POWER SOURCE TO THE JUNCTION BOX AND MAKE REQUIRED SPLICES TO THE CABLES PROVIDED.
2. POLE HEIGHT AND SIZE WILL BE AS SPECIFIED IN THE CONTRACT DOCUMENTS.
3. THIS STANDARD IS APPLICABLE FOR ALL ELECTRICAL SERVICES OTHER THAN 480Y/277.
4. FOR ROADWAY LIGHTING SYSTEMS, ONLY SAFETY SWITCH SHALL BE USED.
5. ALL ELECTRICAL CONNECTIONS AND SPLICES SHALL BE TESTED FOR ELECTRICAL CONTINUITY.
6. EACH ELECTRICAL SERVICE FEEDER SHALL BE SEPARATED AND TAGGED IN ACCESSIBLE LOCATIONS INSIDE THE POLE TO PERMANENTLY IDENTIFY LIGHTING AND SIGNAL POWER CABLES.
7. CONDUIT AND CONDUCTOR SIZE SHALL BE AS SPECIFIED IN THE CONTRACT DOCUMENTS.
8. RIGID METAL RISER CONDUIT AND SERVICE CABLE SIZE SHALL BE AS SPECIFIED IN THE CONTRACT DOCUMENTS, OR AS SPECIFIED BY THE LOCAL POWER COMPANY.
9. WHEN REQUIRED BY THE CONTRACT DOCUMENTS, AN ELECTRICAL SERVICE WORK PAD SHALL BE PLACED IN FRONT OF THE SAFETY SWITCH/BREAKER BOX. ELECTRICAL SERVICE WORK PAD SHALL BE A SEPARATE PAY ITEM.

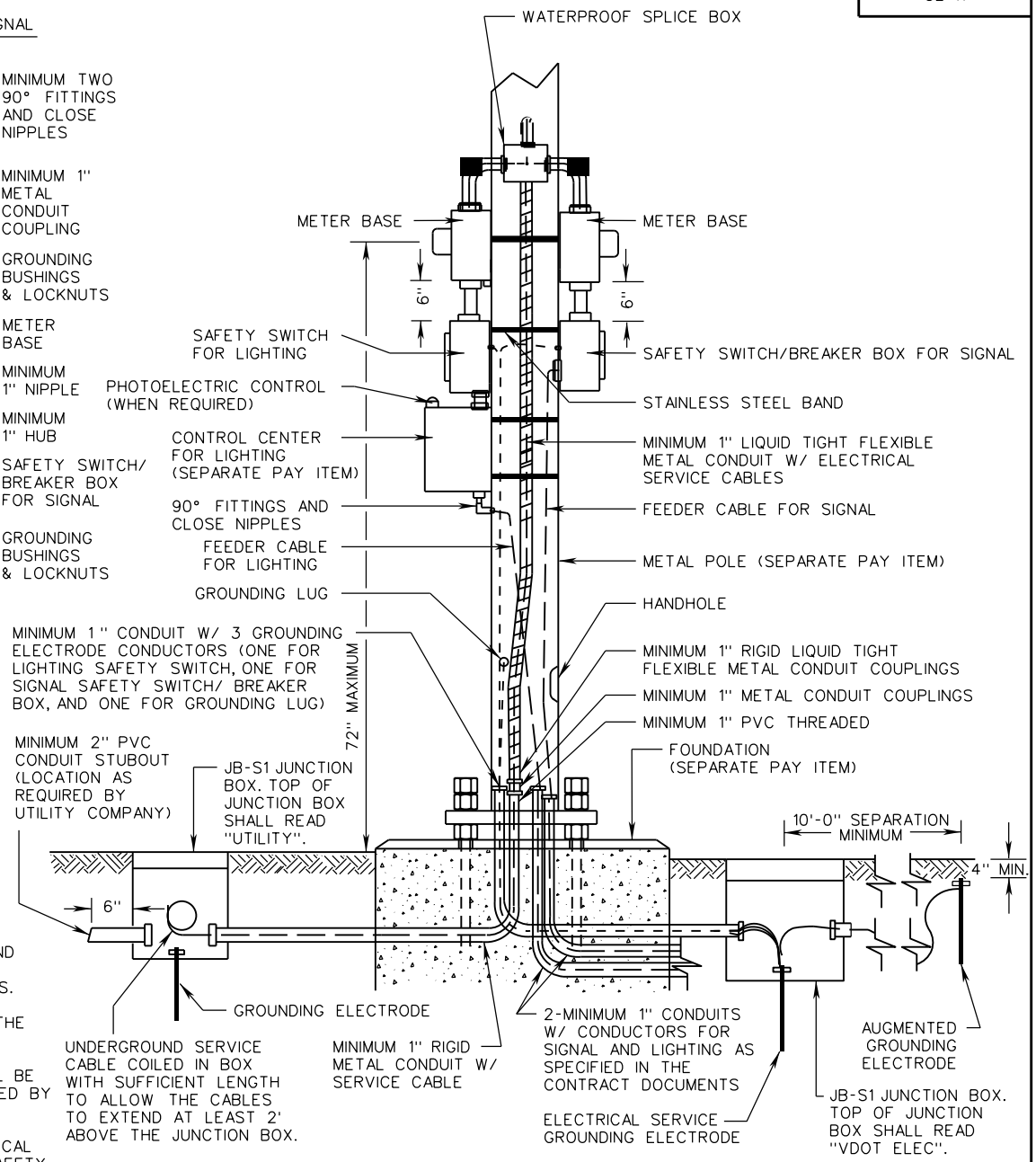

TYPE B (UNDERGROUND SERVICE) METAL POLE

SPECIFICATION REFERENCE	A COPY OF THE ORIGINAL SEALED AND SIGNED DRAWING IS ON FILE IN THE CENTRAL OFFICE.	VDOT ROAD AND BRIDGE STANDARDS	
700	ELECTRICAL SERVICE INSTALLATION DETAILS VIRGINIA DEPARTMENT OF TRANSPORTATION	REVISION DATE 02/16	SHEET 2 OF 2 1313.21

CCW-1

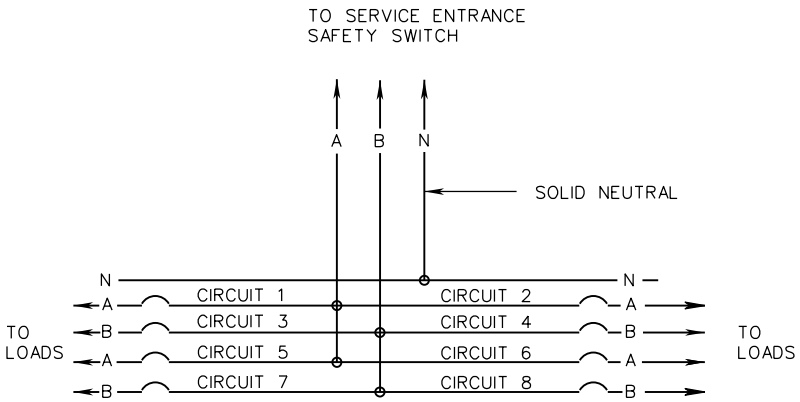

TYPE A
(SINGLE PHASE)

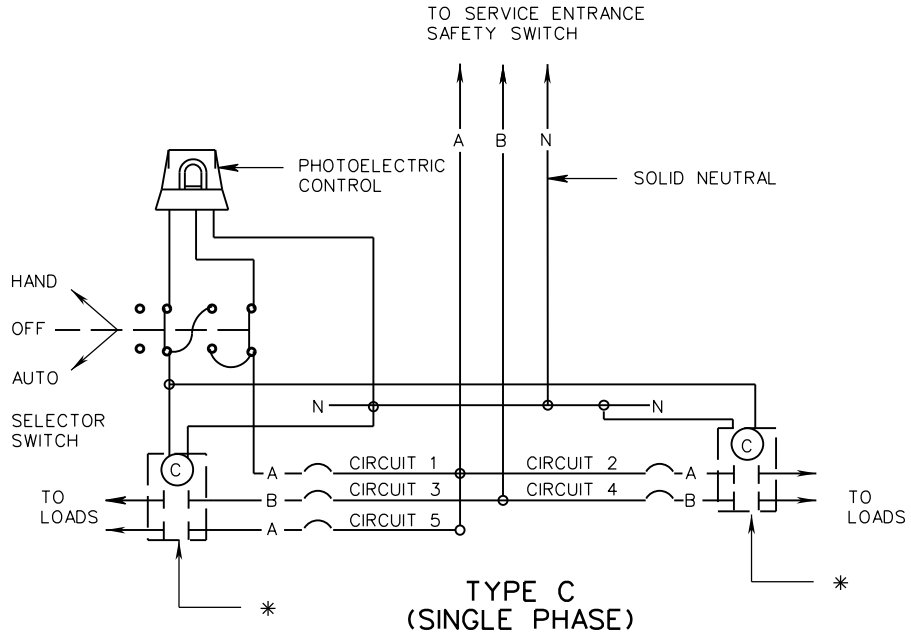

TYPE C
(SINGLE PHASE)

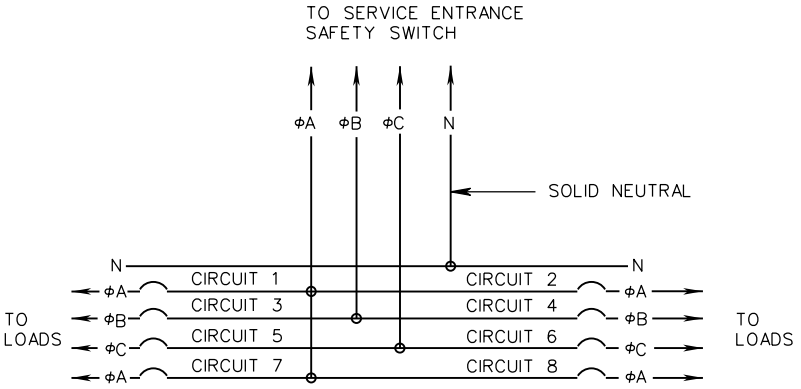

TYPE B
(THREE PHASE)

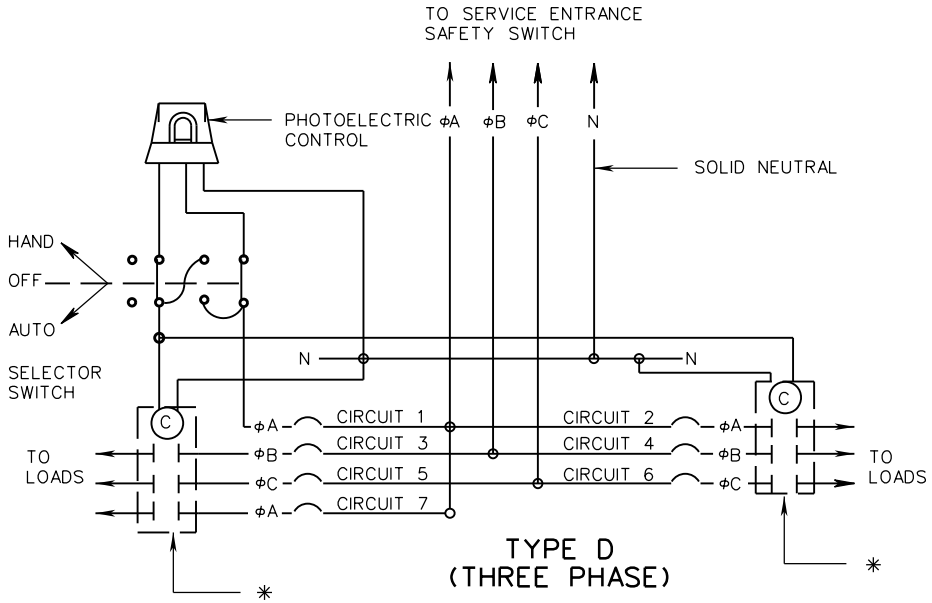

TYPE D
(THREE PHASE)

NOTES:

ALL CIRCUIT BREAKERS SHALL BE SINGLE POLE.

VOLTAGE AND AMPERAGE RATINGS OF CONTACTORS AND BREAKERS SHALL BE AS INDICATED ON THE PLANS.

NUMBER OF CIRCUITS SHOWN ARE TYPICAL. EXACT NUMBER REQUIRED SHALL BE AS INDICATED ON THE PLANS.

* CONTACTORS SHALL BE 2 POLES FOR SINGLE PHASE AND 3 POLES FOR THREE PHASE SERVICES. NUMBER OF CONTACTORS SHALL BE AS REQUIRED TO HANDLE THE NUMBER OF CIRCUITS ACTUALLY BEING UTILIZED.

VDOT ROAD AND BRIDGE STANDARDS	CONTROL CENTER WIRING DETAILS	SPECIFICATION REFERENCE
SHEET 1 OF 4	VIRGINIA DEPARTMENT OF TRANSPORTATION	700 705
REVISION DATE		
1314.10		

CCW-1

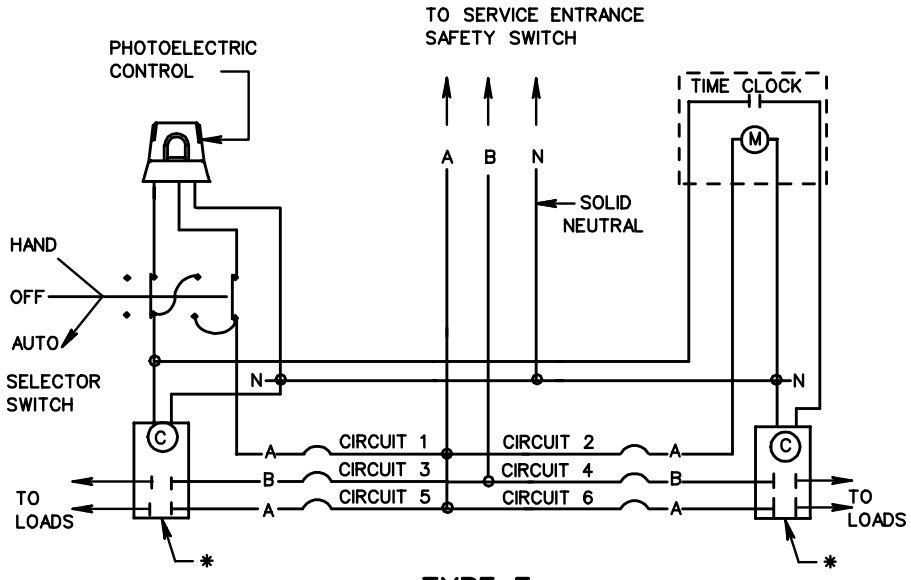

TYPE E
(SINGLE PHASE)

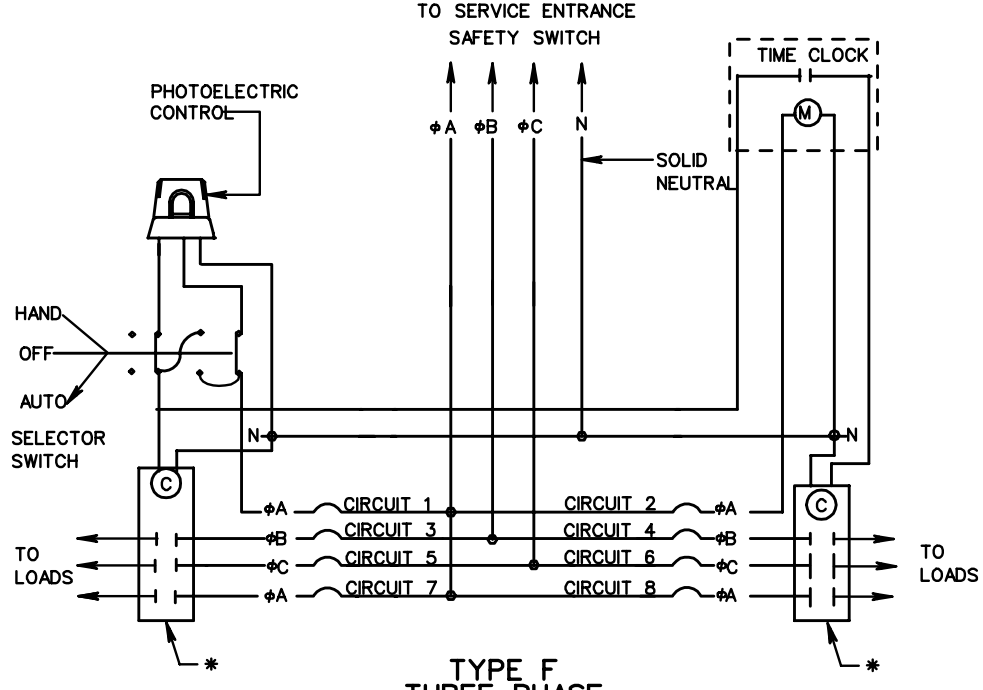

TYPE F
THREE PHASE

NOTES:

ALL CIRCUIT BREAKERS SHALL BE SINGLE POLE.

VOLTAGE AND AMPERAGE RATINGS OF CONTACTORS AND BREAKERS SHALL BE AS INDICATED ON THE PLANS.

NUMBER OF CIRCUITS SHOWN ARE TYPICAL. EXACT NUMBER REQUIRED SHALL BE AS INDICATED ON THE PLANS.

* CONTACTORS SHALL BE 2 POLES FOR SINGLE PHASE AND 3 POLES FOR THREE PHASE SERVICES. NUMBER OF CONTACTORS SHALL BE AS REQUIRED TO HANDLE THE NUMBER OF CIRCUITS ACTUALLY BEING UTILIZED.

SPECIFICATION REFERENCE	CONTROL CENTER WIRING DETAILS VIRGINIA DEPARTMENT OF TRANSPORTATION	VDOT ROAD AND BRIDGE STANDARDS
700 705		REVISION DATE / SHEET 2 OF 4 1314.11

CCW-1

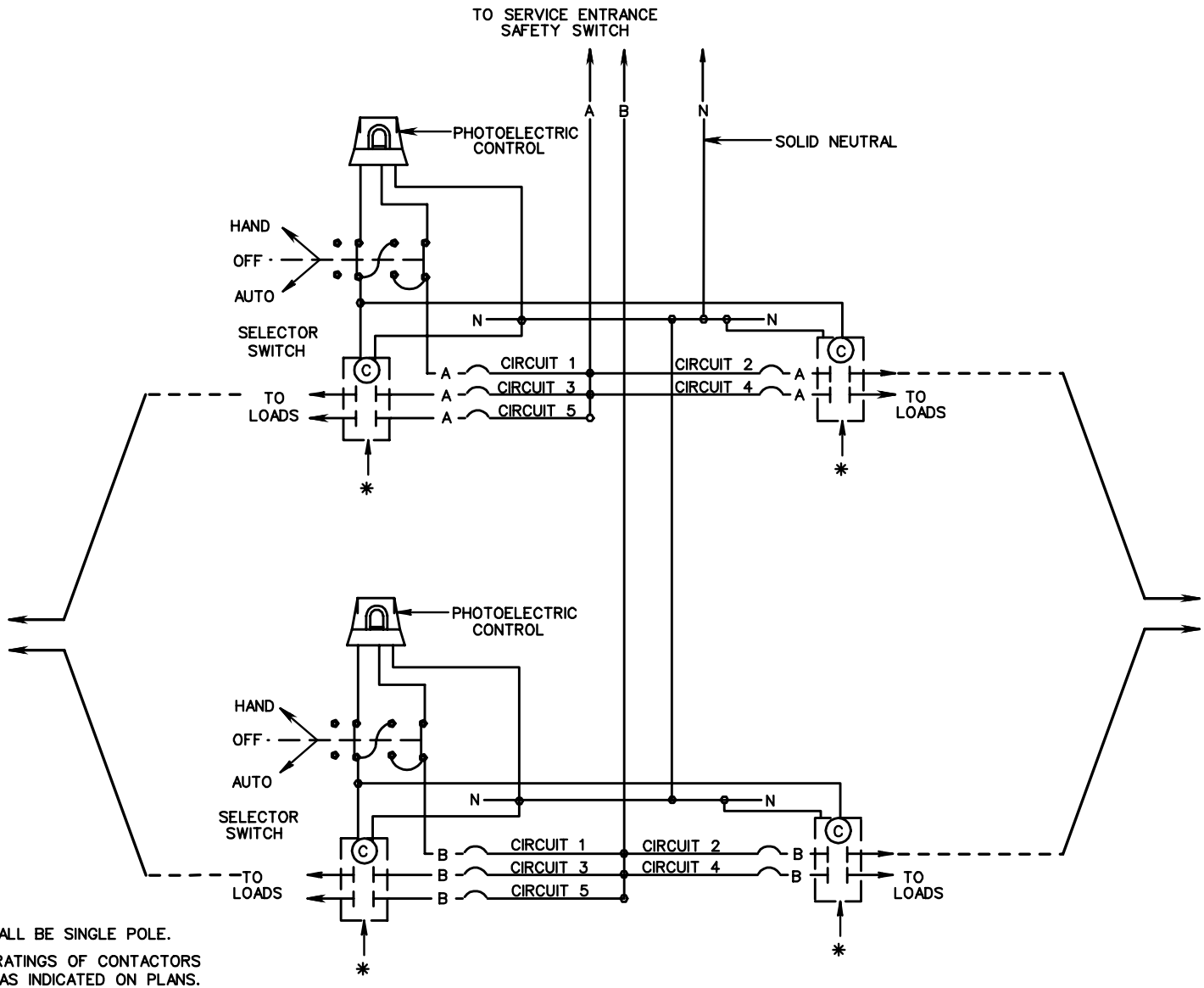

TYPE G
(SINGLE PHASE)

NOTES:

ALL CIRCUIT BREAKERS SHALL BE SINGLE POLE.

VOLTAGE AND AMPERAGE RATINGS OF CONTACTORS AND BREAKERS SHALL BE AS INDICATED ON PLANS.

NUMBER OF CIRCUITS SHOWN ARE TYPICAL. EXACT NUMBER REQUIRED SHALL BE AS INDICATED ON THE PLANS.

* CONTACTOR SHALL BE 2 POLES FOR SINGLE PHASE AND 3 POLES FOR THREE PHASE SERVICES.

NUMBER OF CONTACTORS SHALL BE AS REQUIRED TO HANDLE THE NUMBER OF CIRCUITS ACTUALLY BEING UTILIZED.

VDOT ROAD AND BRIDGE STANDARDS	CONTROL CENTER WIRING **DETAILS** VIRGINIA DEPARTMENT OF TRANSPORTATION	SPECIFICATION REFERENCE
SHEET 3 OF 4 / REVISION DATE		700 705
1314.12		

CCW-1

NOTES:

ALL CIRCUIT BREAKERS SHALL BE SINGLE POLE.

VOLTAGE AND AMPERAGE RATING OF CONTACTORS AND BREAKERS SHALL BE AS INDICATED ON THE PLANS.

NUMBER OF CIRCUITS SHOWN ARE TYPICAL. EXACT NUMBER REQUIRED SHALL BE AS INDICATED ON THE PLANS.

* CONTACTORS SHALL BE 2 POLES FOR SINGLE PHASE AND 3 POLES FOR THREE PHASE SERVICES. NUMBER OF CONTACTORS SHALL BE AS REQUIRED TO HANDLE THE NUMBER OF CIRCUITS ACTUALLY BEING UTILIZED.

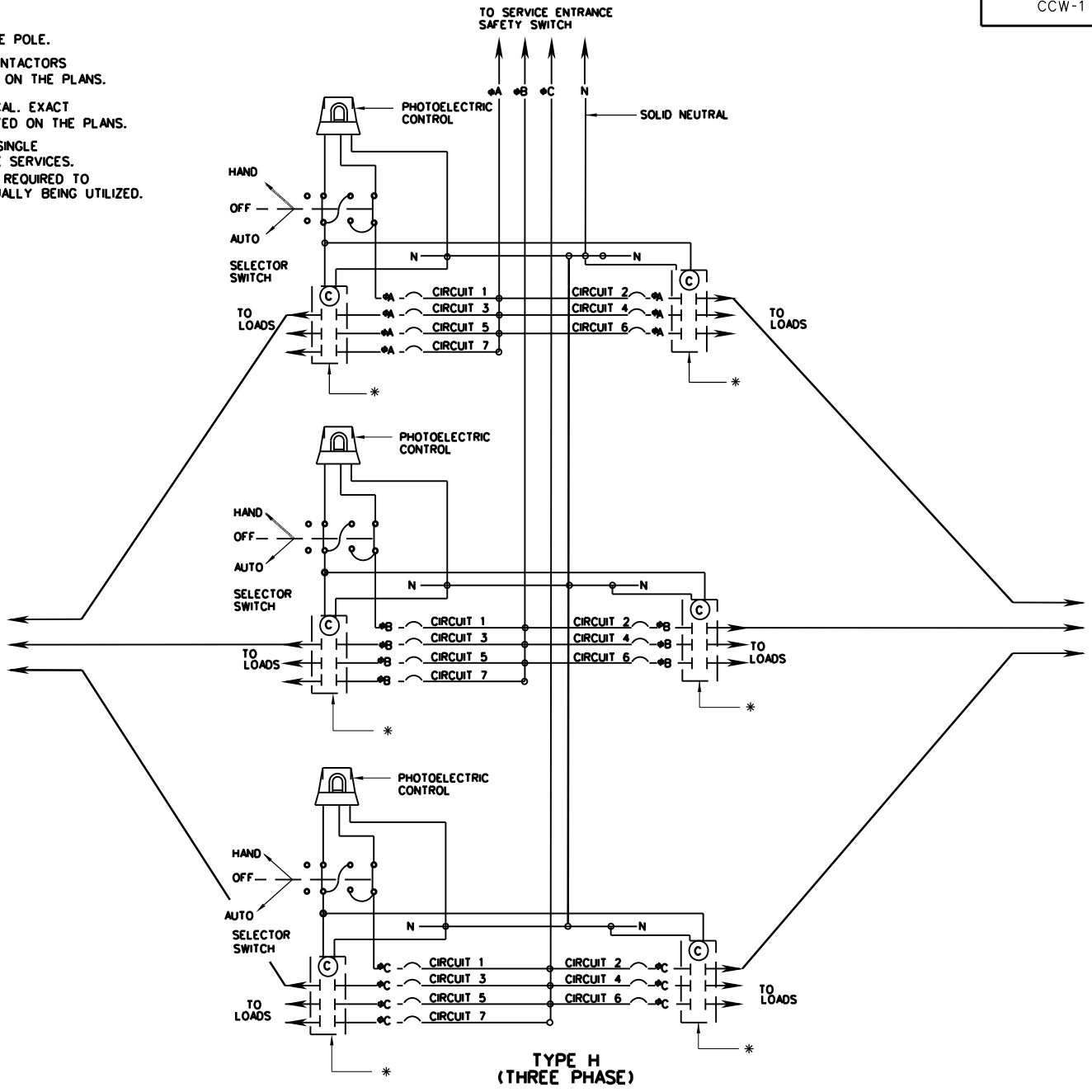

SPECIFICATION REFERENCE	CONTROL CENTER WIRING DETAILS	VDOT ROAD AND BRIDGE STANDARDS
700 705	VIRGINIA DEPARTMENT OF TRANSPORTATION	REVISION DATE / SHEET 4 OF 4 / 1314.13

TD-1A, B, C

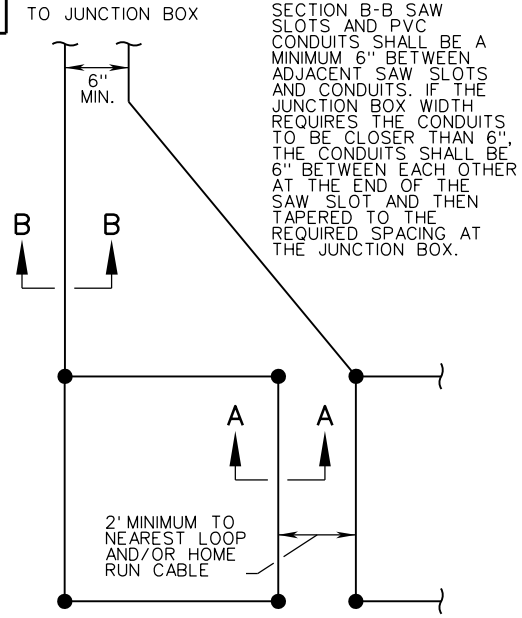

SECTION B-B SAW SLOTS AND PVC CONDUITS SHALL BE A MINIMUM 6" BETWEEN ADJACENT SAW SLOTS AND CONDUITS. IF THE JUNCTION BOX WIDTH REQUIRES THE CONDUITS TO BE CLOSER THAN 6", THE CONDUITS SHALL BE 6" BETWEEN EACH OTHER AT THE END OF THE SAW SLOT AND THEN TAPERED TO THE REQUIRED SPACING AT THE JUNCTION BOX.

TYPICAL LOOP WIRE PLAN

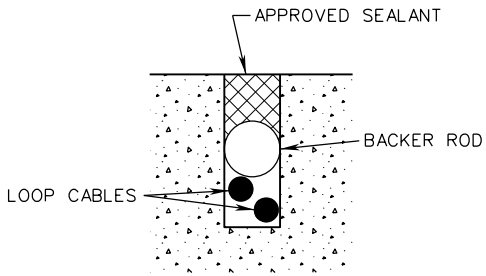

CROSS SECTION
TYPICAL SEALED SLOT

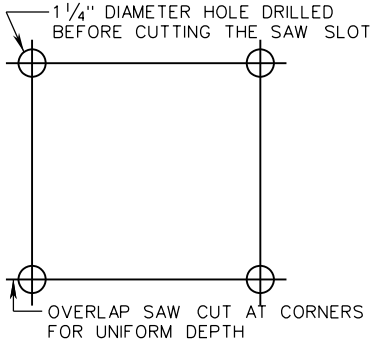

TYPICAL SAW CUT DIAGRAM

NOTES:

1. SAW SLOT SHALL BE 5/8" WHEN LOOP DETECTOR CABLE ENCLOSED IN TUBING IS INSTALLED.
2.
   - IN NEW ASPHALT CONCRETE ROADWAYS, SAW SLOTS SHALL BE CUT INTO THE BASE COURSE TO A DEPTH OF 3".
   - IN EXISTING ASPHALT CONCRETE ROADWAYS WHICH ARE TO BE RESURFACED AS PART OF THE PROJECT, SAW SLOTS SHALL BE CUT INTO THE PLANED SURFACE TO A DEPTH OF 3" PRIOR TO THE OVERLAY. LOOP DETECTORS MAY BE INSTALLED THROUGH FINISHED RIDING SURFACE AS SPECIFIED IN CONTRACT DOCUMENTS. SAW SLOTS IN FINAL RIDING SURFACE SHALL HAVE A 4" MINIMUM AND 4.5" MAXIMUM DEPTH.
   - IN EXISTING ASPHALT CONCRETE ROADWAYS WHICH ARE NOT TO BE RESURFACED AS PART OF THE PROJECT, SAW SLOTS SHALL BE CUT INTO THE EXISTING SURFACE TO A DEPTH OF 4".

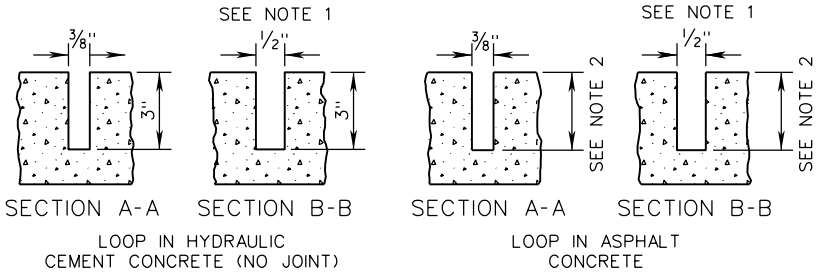

DEPTH OF SAW SLOT SHALL BE MEASURED FROM PAVEMENT SURFACE AT TIME OF INSTALLATION. NOT NECESSARILY FINISHED GRADE.

TYPICAL SAW SLOT DETAIL

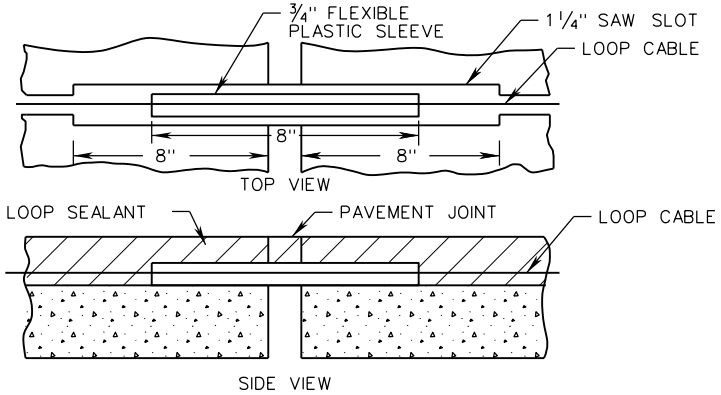

INSTALLATION OF LOOP CABLE ACROSS HYDRAULIC CEMENT CONCRETE PAVEMENT JOINTS

VDOT ROAD AND BRIDGE STANDARDS	A COPY OF THE ORIGINAL SEALED AND SIGNED DRAWING IS ON FILE IN THE CENTRAL OFFICE.		SPECIFICATION REFERENCE
SHEET 1 OF 3	LOOP DETECTOR		703
1315.10	INSTALLATION DETAIL	REVISION DATE 02/16	
	VIRGINIA DEPARTMENT OF TRANSPORTATION		

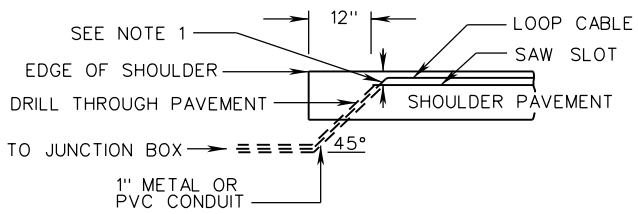

SHOULDER SECTION

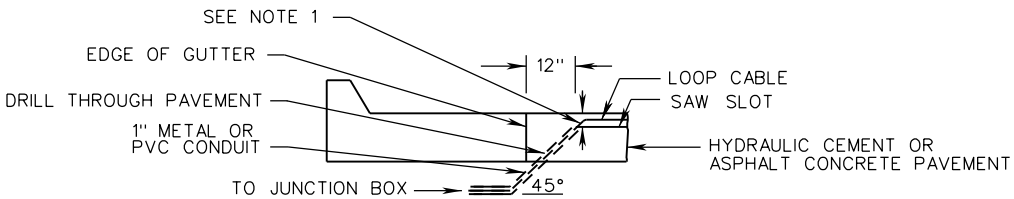

CURB AND GUTTER SECTION

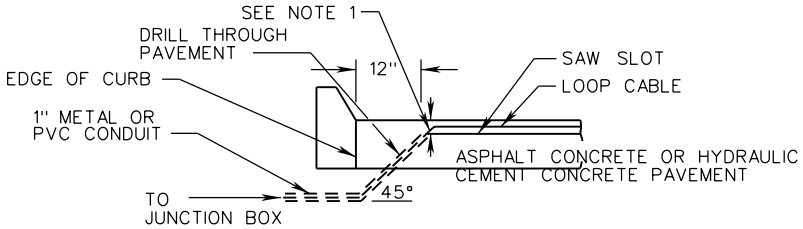

CURB SECTION (NO GUTTER)

NOTES:

1. THE TOP OF 1" CONDUITS SHALL BE INSTALLED 1" BELOW THE BOTTOM OF THE SAW SLOT.
2. PLASTIC BUSHINGS SHALL BE INSTALLED ON THE ENDS OF THE CONDUITS IN THE PAVEMENT. DUCT SEAL SHALL BE APPLIED TO THE OPEN END OF THE BUSHING.
3. SAW SLOTS SHALL INTERSECT WITH THE HOLES DRILLED FOR INSTALLATION OF THE CONDUITS AND LOOP CABLES.
4. DRILLED HOLES SHALL BE NO LARGER THAN REQUIRED FOR INSTALLATION OF THE CONDUIT AND PLASTIC BUSHING.
5. REMOVAL OF LARGE SECTIONS OF PAVEMENT TO PERFORM THIS WORK WILL NOT BE ALLOWED.
6. ONE CONDUIT SHALL BE PROVIDED FOR EACH SAW SLOT.
7. ALL DIMENSIONS NOT SHOWN SHALL BE AS SPECIFIED ON THE CONTRACT DOCUMENTS.

SPECIFICATION REFERENCE	A COPY OF THE ORIGINAL SEALED AND SIGNED DRAWING IS ON FILE IN THE CENTRAL OFFICE.	VDOT ROAD AND BRIDGE STANDARDS	
703	LOOP DETECTOR INSTALLATION DETAIL VIRGINIA DEPARTMENT OF TRANSPORTATION	REVISION DATE 02/16	SHEET 2 OF 3 1315.11

TD-1A, B, C

NOTES:

1. ALL DIMENSIONS NOT SHOWN SHALL BE AS SPECIFIED ON THE CONTRACT DOCUMENTS.
2. LOOP WIRE TWISTED TOGETHER WITH A MINIMUM OF THREE TURNS PER RUNNING FOOT.
3. BASED ON THE LENGTH OF LEAD-IN CABLE, ADDITIONAL WIRE TURNS PER LOOP MAY BE REQUIRED AS SPECIFIED BY THE CONTRACT DOCUMENTS.

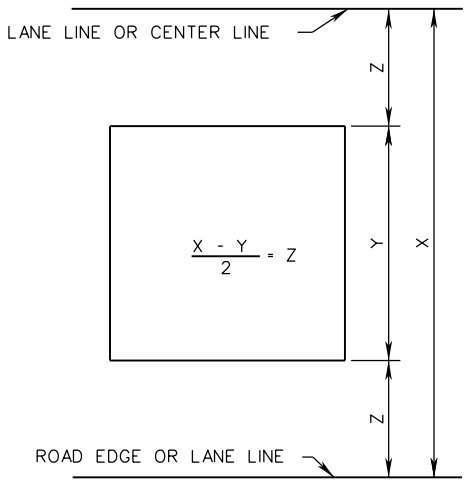

TYPICAL LANE COVERAGE DIAGRAM

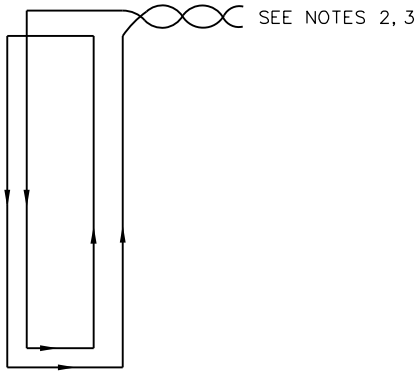

LOOP CABLE INSTALLATION

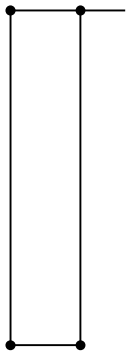

PLAN VIEW

TD-1A

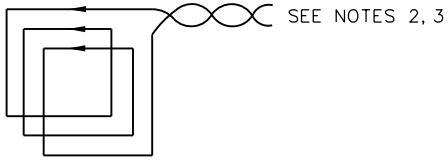

LOOP CABLE INSTALLATION

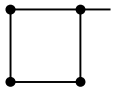

PLAN VIEW

TD-1B

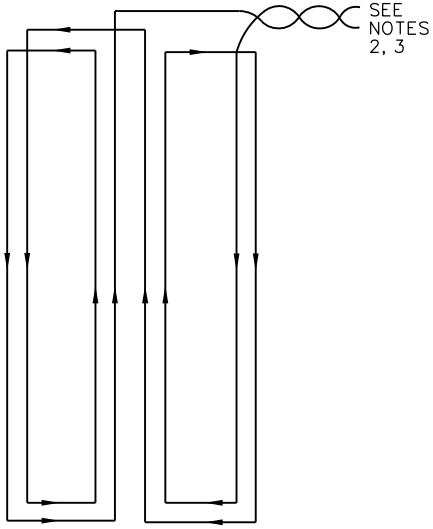

LOOP CABLE INSTALLATION

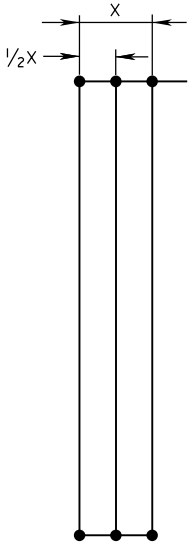

PLAN VIEW

TD-1C

VDOT ROAD AND BRIDGE STANDARDS	A COPY OF THE ORIGINAL SEALED AND SIGNED DRAWING IS ON FILE IN THE CENTRAL OFFICE.	SPECIFICATION REFERENCE
SHEET 3 OF 3 / 1315.12	LOOP DETECTOR INSTALLATION DETAIL VIRGINIA DEPARTMENT OF TRANSPORTATION	703
REVISION DATE NEW 02/16		

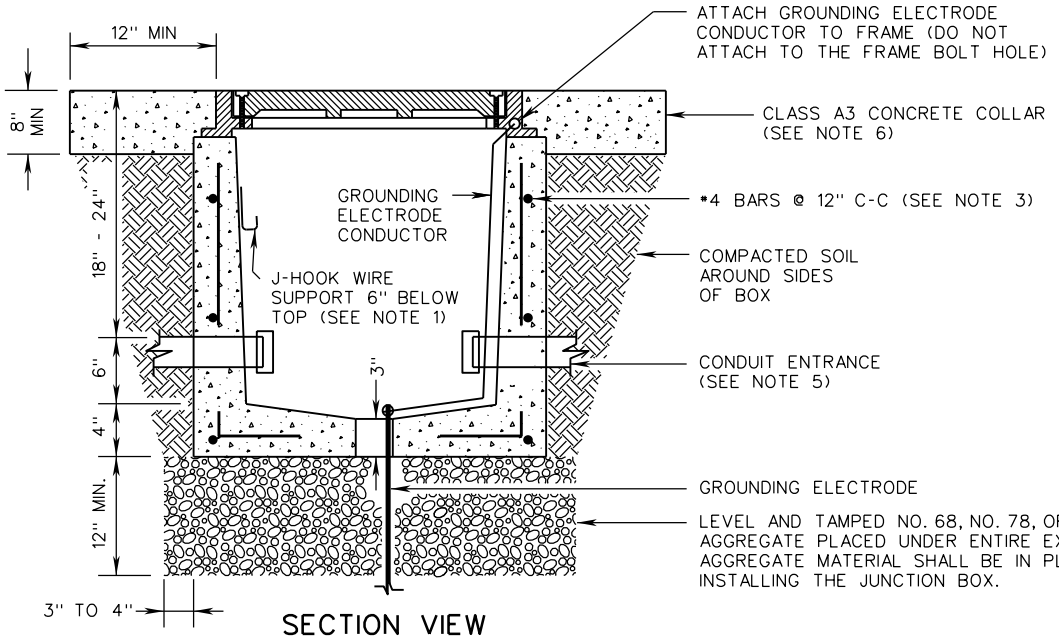

SECTION VIEW
(JB-R1 AND R2)

STANDARD	DIMENSIONS	
	E	F
JB-R1	20"	20"
JB-R2	27"	27"

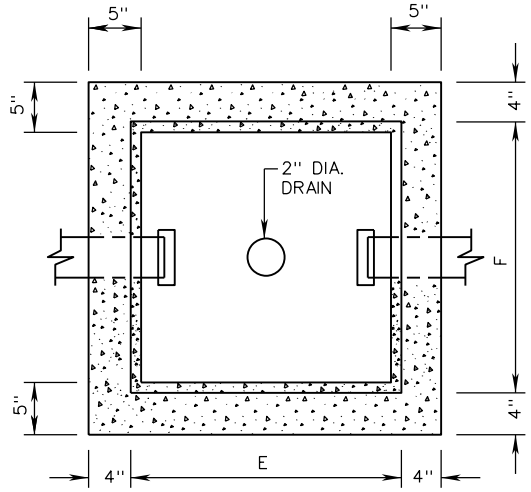

TOP VIEW
(FRAME AND COVER REMOVED)
(JB-R1 AND R2)

NOTES:

1. J-HOOK WIRE SUPPORTS SHALL BE SECURELY ATTACHED TO THE JUNCTION BOX WITH A BOLT AND NUT WITH A NEOPRENE WASHER OR AN EXPANSION FITTING. ONE J-HOOK PER WALL SHALL BE INSTALLED FOR JB-R1 AND R2 BOXES. TWO J-HOOKS PER WALL (EQUALLY SPACED) SHALL BE INSTALLED FOR JB-R3 BOXES.
2. CONDUIT ENTRANCES SHALL BE LOCATED AS SHOWN IN THE CONTRACT DOCUMENTS. CONDUITS SHALL EXTEND 2" MIN. TO 3" MAX. INTO THE INSIDE WALL OF THE JUNCTION BOX.
3. ALL REINFORCING STEEL SHALL BE IN ACCORDANCE WITH SECTION 223 OF THE SPECIFICATIONS, SHALL HAVE A MINIMUM 1 1/2" CONCRETE COVER. ANY REINFORCING STEEL IN CONFLICT WITH CONDUIT SHALL BE CUT A MINIMUM OF 1 1/2" FROM CONDUIT.
4. THE JUNCTION BOX MAY BE PRECAST OR CAST IN PLACE CLASS A3 CONCRETE.
5. A MINIMUM 2" DIAMETER CONDUIT ENTRANCE IS REQUIRED UNLESS OTHERWISE SPECIFIED IN THE CONTRACT DOCUMENTS.
6. A CONCRETE COLLAR IS REQUIRED ONLY WHEN JUNCTION BOX IS INSTALLED IN EARTH AREAS.
7. HIGH STRENGTH GROUT CONFORMING TO THE ROAD & BRIDGE SPECIFICATIONS SHALL BE USED TO SECURE THE FRAME TO THE JUNCTION BOX.
8. ALL JUNCTION BOXES SHALL BE INSTALLED WITH A GROUNDING ELECTRODE.
9. VOIDS RESULTING FROM ENTRANCE OF CONDUITS INTO JUNCTION BOX SHALL BE COMPLETELY FILLED WITH HYDRAULIC CEMENT GROUT CONFORMING TO THE ROAD & BRIDGE SPECIFICATIONS.
10. WHEN INSTALLED, CONDUIT STUB-OUTS SHALL EXTEND A MINIMUM OF 6" PAST THE OUTSIDE OF THE JUNCTION BOX AND SHALL BE CAPPED OR PLUGGED.

SPECIFICATION REFERENCE	A COPY OF THE ORIGINAL SEALED AND SIGNED DRAWING IS ON FILE IN THE CENTRAL OFFICE.	VDOT ROAD AND BRIDGE STANDARDS	
700	JUNCTION BOX FOR TRAFFIC USE VIRGINIA DEPARTMENT OF TRANSPORTATION	REVISION DATE 08/17	SHEET 1 OF 2 1317.10

JB-R1, R2

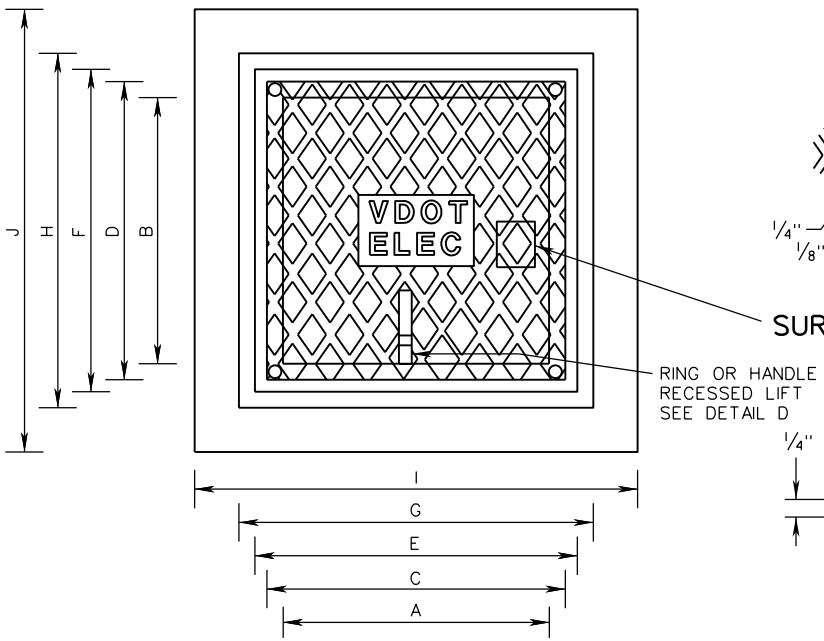

TOP VIEW

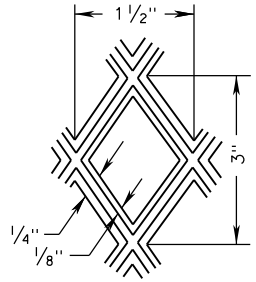

DETAIL A
SURFACE PATTERN

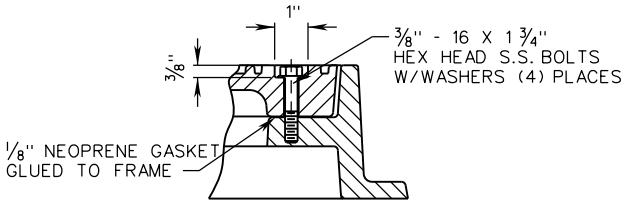

DETAIL C
BOLT DETAIL

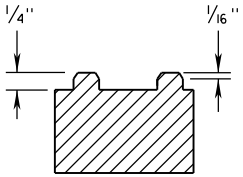

DETAIL B
PATTERN ELEVATION

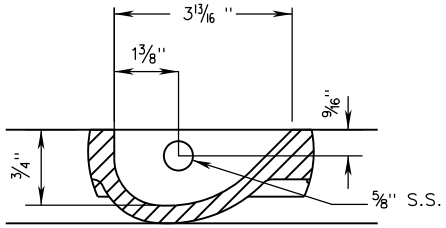

DETAIL D
PICKBAR DETAIL

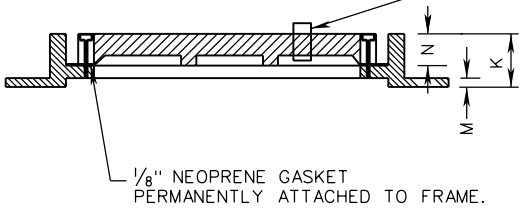

SIDE VIEW

STANDARD	DIMENSIONS												
	A	B	C	D	E	F	G	H	I	J	K	M	N
JB-R1	18"	18"	19"	19"	20"	20"	21"	21"	24"	24"	4"	5/8"	1"
JB-R2	24"	24"	26"	26"	27"	27"	28"	28"	33"	33"	4"	5/8"	1"

NOTES:

1. EACH COVER SECTION SHALL HAVE A NON-SKID SURFACE WITH LETTERS CAST IN THE DEPRESSION ON TOP. THE LETTERS "VDOT ELEC", "VDOT TRAFF", "VDOT COMM", "VDOT FIBER", OR "UTILITY" AS APPLICABLE ARE TO BE ONE (1) INCH WIDE AND RAISED 1/4" HIGH. COVERS USED FOR JUNCTION BOXES INSTALLED THAT WILL BE MAINTAINED BY LOCALITIES SHALL OMIT THE WORD "VDOT".

2. FOUR RECESSED 3/8" S.S. HEX HEAD BOLTS ARE REQUIRED FOR EACH COVER.

2. GRAY IRON CASTINGS SHALL BE AS PER SECTION 224 OF THE SPECIFICATIONS.

VDOT
ROAD AND BRIDGE STANDARDS

SHEET 2 OF 2
1317.11

REVISION DATE
08/17

A COPY OF THE ORIGINAL SEALED AND SIGNED DRAWING IS ON FILE IN THE CENTRAL OFFICE.

JUNCTION BOX
FOR TRAFFIC USE

VIRGINIA DEPARTMENT OF TRANSPORTATION

SPECIFICATION REFERENCE
700

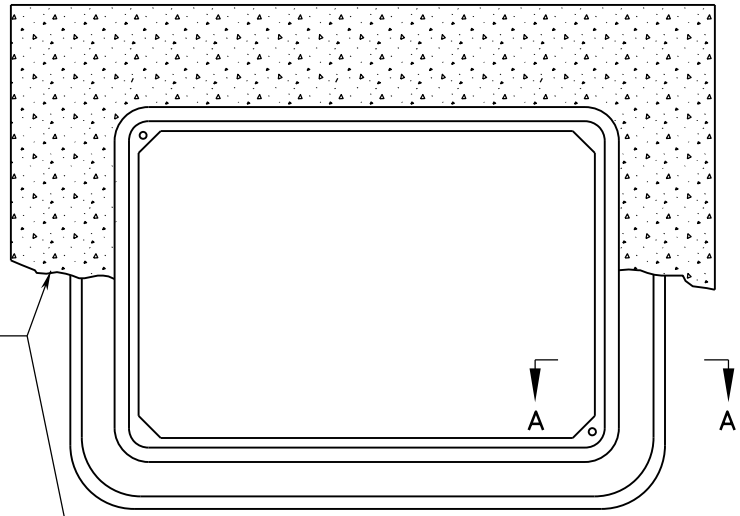

TOP VIEW (COVER REMOVED)
(JB-S1, S2, AND S3)

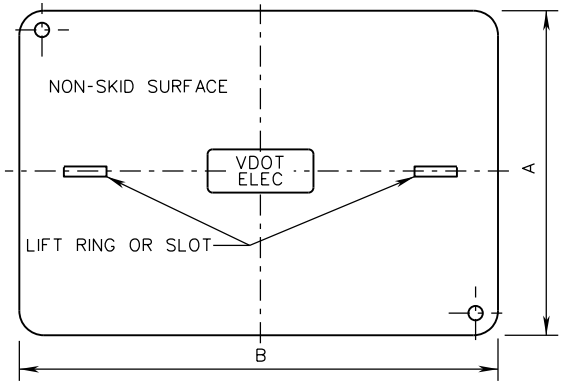

COVER DETAIL (JB-S1, S2, AND S3)

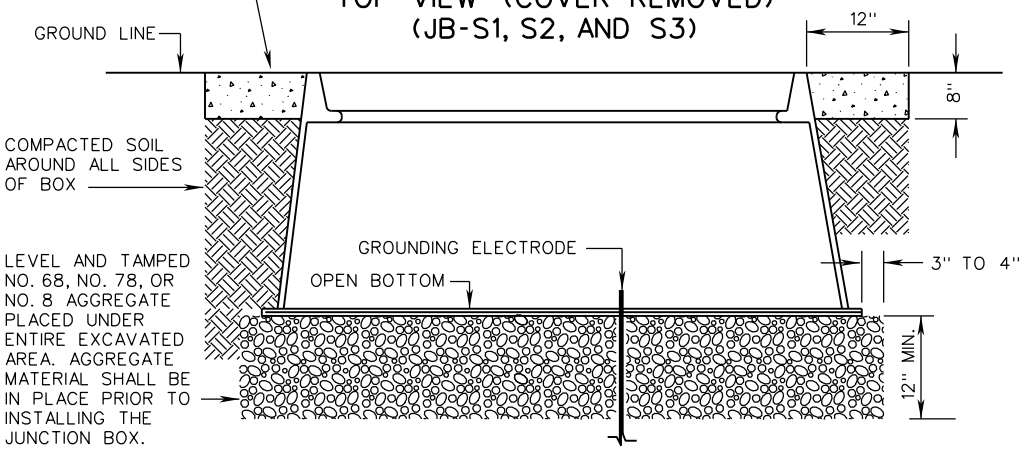

SECTION VIEW (JB-S1, S2, AND S3)

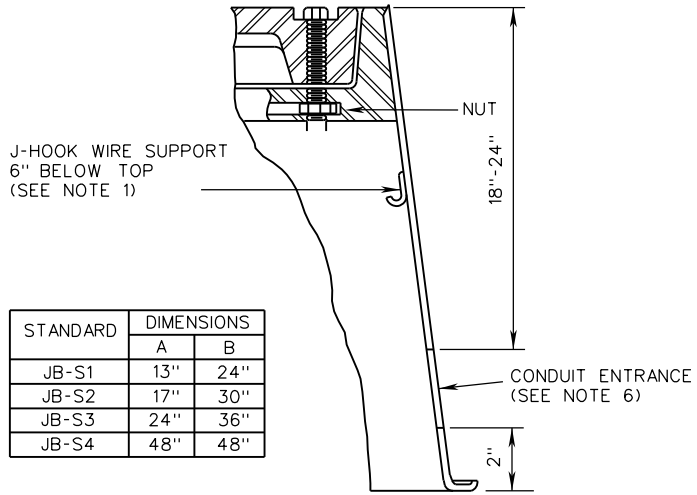

SECTION A-A (JB-S1, S2, AND S3)

STANDARD	DIMENSIONS	
	A	B
JB-S1	13"	24"
JB-S2	17"	30"
JB-S3	24"	36"
JB-S4	48"	48"

NOTES:

1. JUNCTION BOXES SHALL HAVE A STRAIGHT OR FLARED INSIDE WALL DESIGN. MATERIALS SHALL CONFORM TO SECTION 238 OF THE ROAD & BRIDGE SPECIFICATIONS.
2. CONDUIT ENTRANCES SHALL BE LOCATED AS SHOWN IN THE CONTRACT DOCUMENTS. CONDUITS SHALL EXTEND 2" MIN. TO 3" MAX. INTO THE INSIDE WALL OF THE JUNCTION BOX.
3. EACH COVER SECTION SHALL HAVE A NON-SKID SURFACE WITH LETTERS CAST IN THE DEPRESSION ON TOP OR OTHER PRE-APPROVED METHODS THAT DO NOT REQUIRE THE USE OF ADHESIVES. THE LETTERS "VDOT ELEC", "VDOT TRAF", "VDOT COMM", "VDOT FIBER", OR "UTILITY" AS APPLICABLE ARE TO BE 1" WIDE. COVERS USED FOR JUNCTION BOXES INSTALLED THAT WILL BE MAINTAINED BY LOCALITIES SHALL OMIT THE WORD "VDOT".
4. ALL JUNCTION BOXES SHALL BE INSTALLED WITH A GROUNDING ELECTRODE.
5. TWO RECESSED ⅜" S.S. HEX HEAD BOLTS ARE REQUIRED FOR EACH JB-S1, S2, AND S3 COVER. FOUR RECESSED ⅜" S.S. HEX HEAD BOLTS ARE REQUIRED FOR EACH JB-S4 COVER.
6. A MINIMUM 2" DIAMETER CONDUIT ENTRANCE IS REQUIRED, UNLESS OTHERWISE SPECIFIED IN THE CONTRACT DOCUMENTS.
7. J-HOOK WIRE SUPPORTS SHALL BE SECURELY ATTACHED TO THE JUNCTION BOX WITH A BOLT AND NUT WITH A NEOPRENE WASHER OR AN EXPANSION FITTING. ONE J-HOOK PER WALL SHALL BE INSTALLED FOR JB-S1, S2, AND S3 BOXES. TWO J-HOOKS PER WALL SHALL BE INSTALLED FOR JB-S4 BOXES.
8. VOIDS RESULTING FROM ENTRANCE OF CONDUITS INTO JUNCTION BOXES SHALL BE COMPLETELY FILLED WITH AN APPROVED MATERIAL.
9. CONDUIT STUB-OUTS, WHEN INSTALLED, SHALL EXTEND A MINIMUM OF 6" PAST THE OUTSIDE OF THE JUNCTION BOX.

SPECIFICATION REFERENCE	A COPY OF THE ORIGINAL SEALED AND SIGNED DRAWING IS ON FILE IN THE CENTRAL OFFICE.	VDOT ROAD AND BRIDGE STANDARDS
700 238	JUNCTION BOX FOR NON-DELIBERATE TRAFFIC USE VIRGINIA DEPARTMENT OF TRANSPORTATION	REVISION DATE 08/17 SHEET 1 OF 2 1317.20

JB-S1, S2, S3, S4

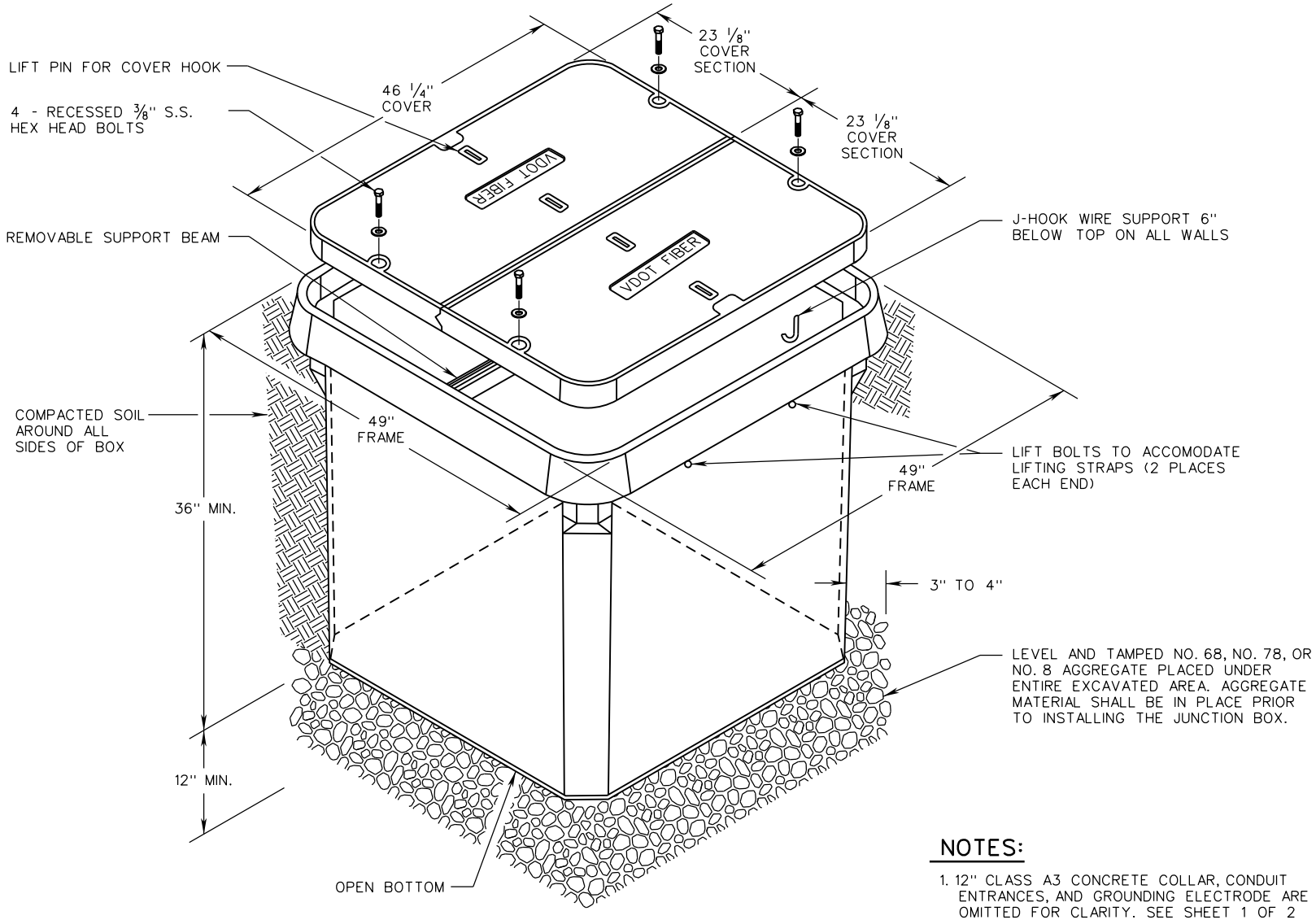

ISOMETRIC VIEW (JB-S4)

NOTES:

1. 12" CLASS A3 CONCRETE COLLAR, CONDUIT ENTRANCES, AND GROUNDING ELECTRODE ARE OMITTED FOR CLARITY. SEE SHEET 1 OF 2 FOR DETAILS.
2. SEE SHEET 1 OF 2 FOR NOTES.

VDOT ROAD AND BRIDGE STANDARDS	A COPY OF THE ORIGINAL SEALED AND SIGNED DRAWING IS ON FILE IN THE CENTRAL OFFICE.	SPECIFICATION REFERENCE
SHEET 2 OF 2	JUNCTION BOX	700
1317.21	FOR NON-DELIBERATE TRAFFIC USE	238
REVISION DATE NEW 08/17	VIRGINIA DEPARTMENT OF TRANSPORTATION	

STANDARD

THIS PAGE INTENTIONALLY LEFT BLANK

SPECIFICATION REFERENCE	TITLE VIRGINIA DEPARTMENT OF TRANSPORTATION	VDOT ROAD AND BRIDGE STANDARDS REVISION DATE	SHEET 1 OF 1 ____._

ECI-1

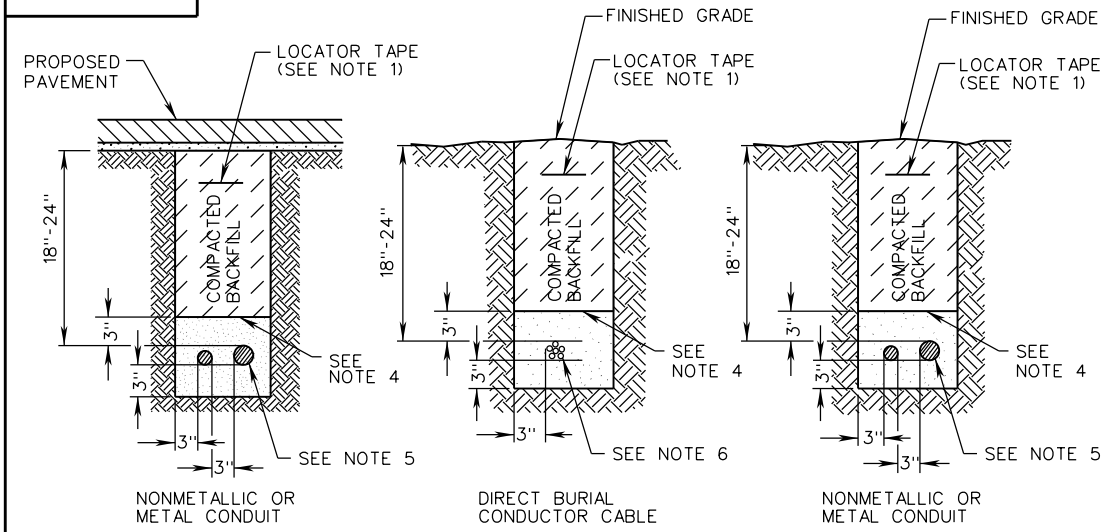

NON - PAVEMENT AND PROPOSED PAVEMENT AREA INSTALLATION

ECI-2

PAVEMENT SHALL BE RESTORED IN ACCORDANCE WITH THE CONTRACT DOCUMENTS.

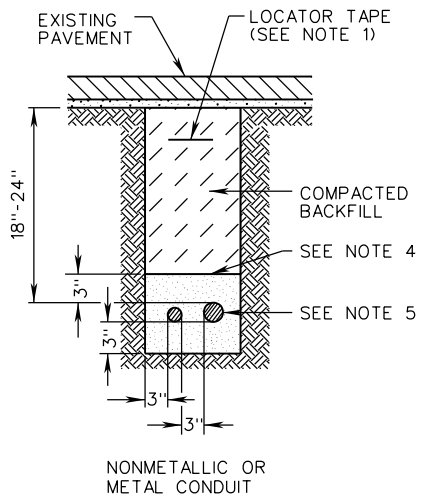

EXISTING PAVEMENT AREA INSTALLATION

NOTES:

1. CONTRACTOR SHALL INSTALL A 2" MINIMUM TO 6" MAXIMUM WIDE RED DETECTABLE LOCATOR TAPE BETWEEN 6" AND 8" BELOW FINISHED GRADE, AND DIRECTLY ABOVE BURIED CONDUIT OR DIRECT BURIAL CONDUCTOR CABLE.
2. CONDUIT INSTALLED UNDER EXISTING OR PROPOSED ROADWAYS OR SIDEWALK FOR DIRECT BURIED CABLES SHALL EXTEND 24" BEYOND THE PAVED SURFACE AND/OR SIDEWALK.
3. WHERE CONDUIT FOR POWER AND CONDUIT FOR COMMUNICATION ARE TO BE INSTALLED IN CLOSE PROXIMITY TO EACH OTHER, CONDUITS SHALL BE PLACED PARALLEL IN A COMMON TRENCH WITH NO LESS THAN 6" OF SEPARATION BETWEEN CONDUIT SYSTEMS.
4. BACKFILL MATERIAL BELOW THIS LEVEL SHALL BE SANDY FILL (FREE OF ANY STONES, CINDERS, WOOD, ROOTS, DEBRIS, ETC.).
5. ONE OR MORE CONDUITS AS REQUIRED.
6. ONE OR MORE CONDUCTOR CABLES AS REQUIRED.
7. OFFSETTING OF CONDUIT MAY BE USED FOR TYING INTO EXISTING CONDUIT SYSTEMS OR BYPASSING OBSTRUCTIONS AS DIRECTED BY THE ENGINEER.
8. WHEN OFFSETTING CONDUIT TO BYPASS AN OBSTRUCTION, THE CONDUIT SHALL MAINTAIN A MINIMUM CLEARANCE OF 12" FROM THE CLOSEST POINT OF THE OBSTRUCTION.

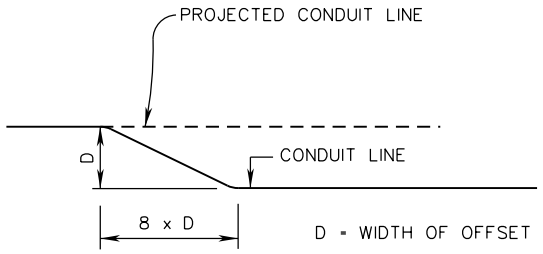

METHOD OF OFFSETTING CONDUIT

VDOT
ROAD AND BRIDGE STANDARDS

SHEET 1 OF 1
1318.10

REVISION DATE
09/18

A COPY OF THE ORIGINAL SEALED AND SIGNED DRAWING IS ON FILE IN THE CENTRAL OFFICE.

ELECTRICAL CONDUIT AND CONDUCTOR CABLE

UNDERGROUND INSTALLATION

VIRGINIA DEPARTMENT OF TRANSPORTATION

SPECIFICATION REFERENCE
700
302

PCS-1

PROCEDURE FOR USING TABLES FOR STANDARDS WSP-1 AND STP-1:

A_1 = AREA OF SIGN PANEL 1

A_2 = AREA OF SIGN PANEL 2

A_3 = AREA OF SIGN PANEL 3

H_1 = CENTROIDAL DISTANCE FROM SIGN PANEL 1 TO GROUND LINE THROUGH REFERENCE POINT

H_2 = CENTROIDAL DISTANCE FROM SIGN PANEL 2 TO GROUND LINE THROUGH REFERENCE POINT

H_3 = CENTROIDAL DISTANCE FROM SIGN PANEL 3 TO GROUND LINE THROUGH REFERENCE POINT

1. SELECT MINIMUM MOUNTING HEIGHT TO BE USED (5'-0" OR 7'-0").

2. DECIDE ON NUMBER OF POSTS TO BE USED (SINGLE, TWO OR THREE).

3. CALCULATE THE AREA OF EACH SIGN PANEL (A_1, A_2, A_3, . . . A_n).

4. CALCULATE THE CENTROIDAL DISTANCE FOR EACH SIGN PANEL (H_1, H_2, H_3, ..H_n).

   THE CENTROIDAL DISTANCE IS THE VERTICAL DISTANCE FROM THE REFERENCE POINT ON THE GROUND LINE TO THE CENTER OF EACH SIGN PANEL.

5. CALCULATE THE CENTROIDAL DISTANCE (H) FOR THE ENTIRE SIGN PANEL GROUP:

$$H = \frac{(A_1 \times H_1 + A_2 \times H_2 + A_3 \times H_3 + \ldots A_n \times H_h)}{(A_1 + A_2 + A_3 + \ldots A_n)}$$

6. ENTER THE APPROPRIATE TABLE BASED ON:

   THE MINIMUM MOUNTING HEIGHT SELECTED IN STEP 1

   PICK THE POST SIZE(S) TO BE REVIEWED, AND ENTERING WITH THE "H" VALUE CALCULATED IN STEP 5, READ THE MAXIMUM AREA UNDER THE SIZE OF POSTS SELECTED IN STEP 3. IF THE TOTAL AREA OF SIGN PANEL(S) TO BE SUPPORTED IS LESS THAN OR EQUAL TO THAT SHOWN IN THE TABLE(S), THE SIZE OF THE POST(S) WILL BE SATISFACTORY.

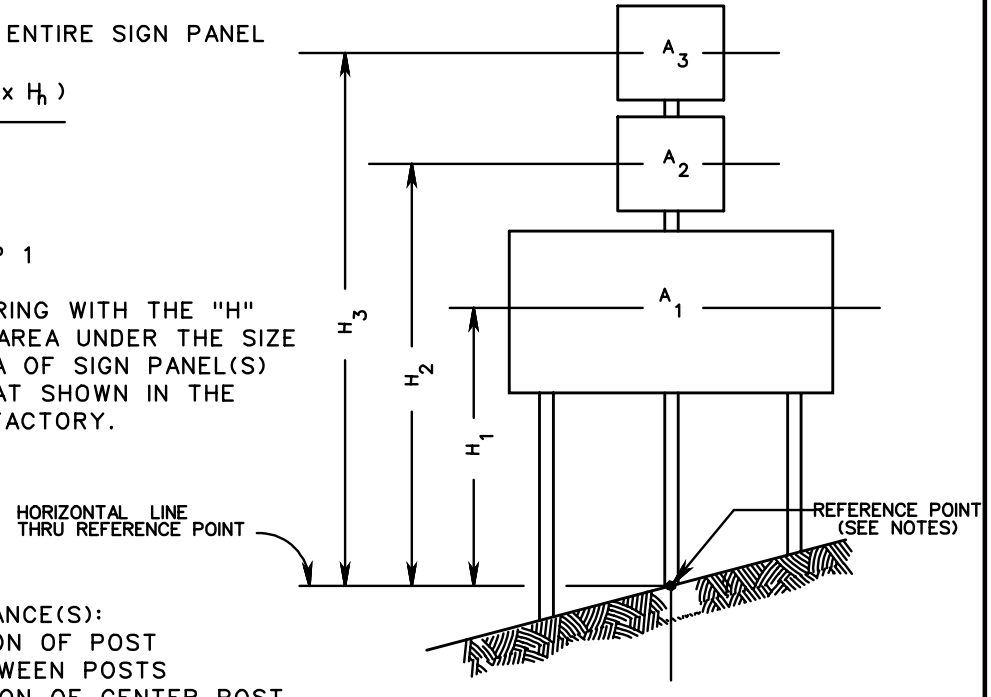

NOTES:

REFERENCE POINT FOR CALCULATING CENTROIDAL DISTANCE(S):
- FOR SINGLE POST: ON GROUND LINE AT INTERSECTION OF POST
- FOR TWO-POSTS: ON GROUND LINE, HALF-WAY BETWEEN POSTS
- FOR THREE POSTS: ON GROUND LINE AT INTERSECTION OF CENTER POST

SPECIFICATION REFERENCE	PROCEDURES FOR CALCULATING CENTROID AND TOTAL SQUARE FOOTAGE OF SIGN PANEL	VDOT ROAD AND BRIDGE STANDARDS
701	VIRGINIA DEPARTMENT OF TRANSPORTATION	REVISION DATE / SHEET 1 OF 1 / 1319.10

WSP-1

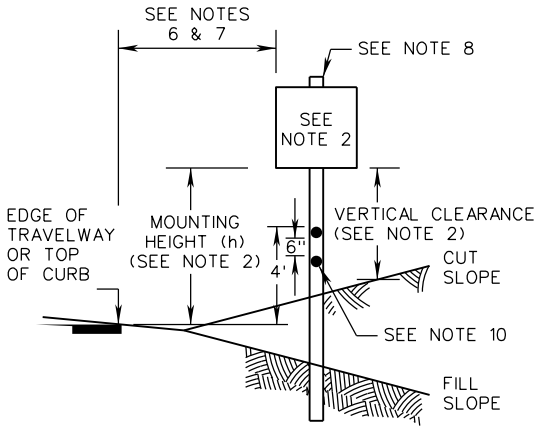

SINGLE POST INSTALLATIONS

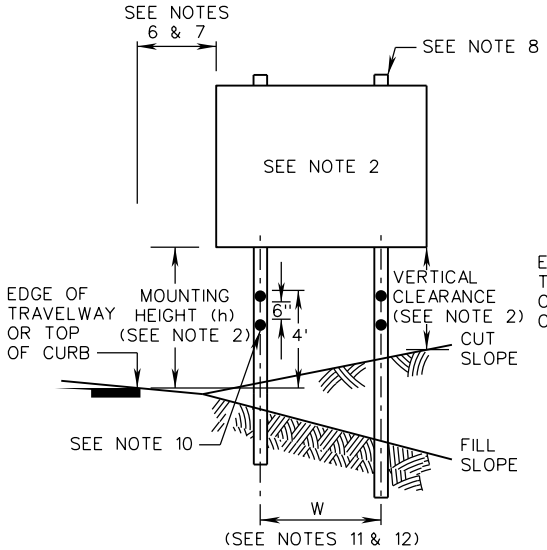

TWO POST INSTALLATIONS

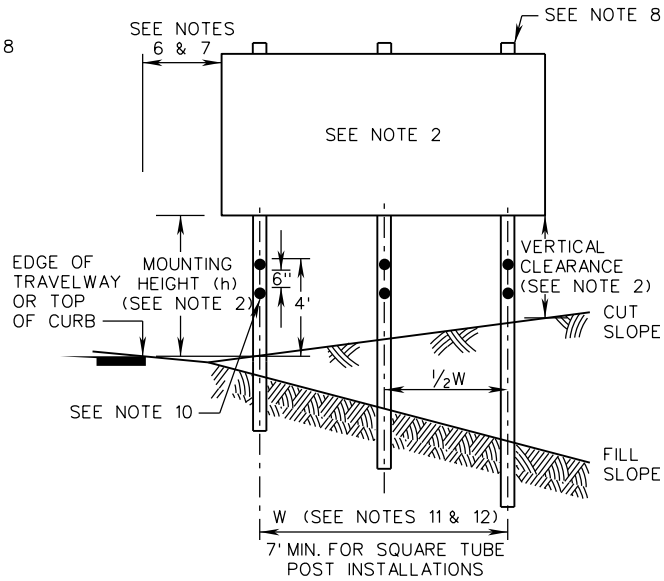

THREE POST INSTALLATIONS

GENERAL NOTES:

1. WSP STANDARDS SHALL ONLY BE USED FOR TEMPORARY SIGN INSTALLATIONS THAT WILL BE IN PLACE FOR A MAXIMUM OF 36 MONTHS.

2. FOR ALL SIGNS EXCEPT STREET NAME SIGNS:
   A. MINIMUM MOUNTING HEIGHT (h) SHALL BE 7 FEET FOR TEMPORARY SIGNS AND 6 FEET FOR SECONDARY SIGNS (SEE NOTE 4).
   B. MAXIMUM MOUNTING HEIGHT (h) FOR THE BOTTOM-MOST SIGN(S) SHALL BE 8 FEET, EXCEPT WHEN NECESSARY TO ACHIEVE MINIMUM VERTICAL CLEARANCE BENEATH SIGN AS PER NOTE 2C.
   C. MINIMUM VERTICAL CLEARANCE (DISTANCE BETWEEN BOTTOM OF SIGN AND FINISHED GRADE BENEATH THE SIGN) SHALL BE 7 FEET FOR ANY PORTION OF THE SIGN WITHIN THE CLEAR ZONE. THIS MINIMUM VERTICAL CLEARANCE MAY BE REDUCED TO 5 FEET FOR EITHER OF THE FOLLOWING CONDITIONS:
      - WHEN SIGNS OR PORTIONS OF SIGNS ARE LOCATED MORE THAN 10 FEET UP A CUT SLOPE GREATER THAN 3:1, OR
      - WHEN THE SIGN IS LOCATED AT LEAST THE MINIMUM DISTANCE BEHIND CURB, BARRIER, OR GUARDRAIL AS PER NOTES 6 AND 7.

3. MOUNTING HEIGHT (h) FOR STREET NAME SIGNS SHALL BE BETWEEN 8'-6" AND 9'-0".

4. A SECONDARY SIGN IS CONSIDERED TO BE A SIGN MOUNTED BELOW ANOTHER SIGN, EXCEPT A ROUTE MARKING ASSEMBLY (CONSISTING OF A ROUTE MARKER WITH AN AUXILIARY PLATE) IS CONSIDERED TO BE A SINGLE SIGN. A SECONDARY SIGN SHALL NOT BE MOUNTED LOWER THAN 7 FEET ABOVE A PEDESTRIAN SIDEWALK OR PATHWAY IF IT WILL PROJECT MORE THAN 4" INTO THE PEDESTRIAN FACILITY.

5. FOR SIGNS LOCATED IN AREAS WHERE PEDESTRIAN MOVEMENTS ARE LIKELY TO OCCUR OR ON-STREET PARKING IS PERMITTED, THE HEIGHT (h) FROM THE LOWEST PORTION OF THE SIGN TO THE FINISHED SURFACE SHALL HAVE A CLEARANCE OF 7 FEET.

6. THE LATERAL CLEARANCE TO THE SIGN EDGE SHALL BE A MINIMUM OF 2 FEET FROM THE FACE OF CURB OR 4 FEET FROM FACE OF PERMANENT CONCRETE BARRIER, IF PRESENT. THE EDGE OF SIGN SHALL BE OUTSIDE THE DEFLECTION ZONE FOR TRAFFIC BARRIER SERVICE.

7. UNLESS OTHERWISE APPROVED BY THE ENGINEER, SIGNS PLACED BEHIND GUARDRAIL SHALL BE LOCATED SUCH THAT THE NEAR SIDE EDGE OF THE SIGN PANEL IS OUTSIDE OF THE GUARDRAIL DEFLECTION DISTANCE.

8. THE TOP OF THE SIGN POST MAY EXTEND NO MORE THAN 2 FEET ABOVE THE TOP OF THE SIGN.

9. THE SIGN POST SHALL BE PLUMB AT INSTALLATION AND SHALL NOT LEAN OR TWIST DURING USE. IN THE EVENT THE POST LEANS OR TWISTS OUT OF POSITION THE CONTRACTOR SHALL TAKE IMMEDIATE CORRECTIVE ACTION.

10. ED-3 TYPE 2 DELINEATORS SHALL BE PLACED ON ALL POSTS DURING ALL TIMES THAT THE SIGN IS COVERED. THE COLOR OF THE ED-3 DELINEATORS SHALL MATCH THE COLOR OF THE ADJACENT EDGE LINE MARKING.

WOOD POST NOTES:

11. MINIMUM SPACING (CENTER TO CENTER) BETWEEN TWO 4" x 4" WOOD POSTS SHALL BE 3 FEET. MINIMUM SPACING (CENTER TO CENTER) BETWEEN TWO WOOD POSTS OF ANY OTHER SIZE SHALL BE 8 FEET.

SQUARE TUBE POST NOTES:

12. W = (0.60) X (SIGN WIDTH)

VDOT ROAD AND BRIDGE STANDARDS	A COPY OF THE ORIGINAL SEALED AND SIGNED DRAWING IS ON FILE IN THE CENTRAL OFFICE. TEMPORARY SIGNS (FOR CONSTRUCTION, MAINTENANCE, PERMIT AND UTILITY ACTIVITIES) WOOD POST AND SQUARE TUBE POST SIGN STRUCTURES VIRGINIA DEPARTMENT OF TRANSPORTATION		SPECIFICATION REFERENCE
SHEET 1 OF 7		REVISION DATE	512 700
1320.10		08/17	

WSP-1

INSTALLATION DETAILS

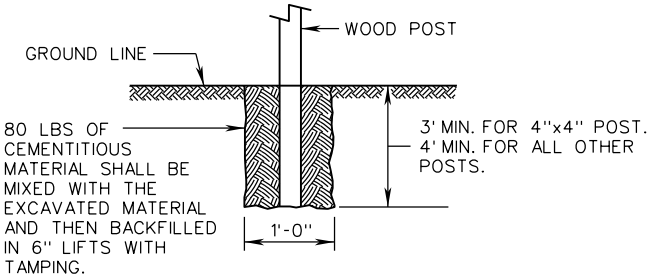

SET IN EARTH

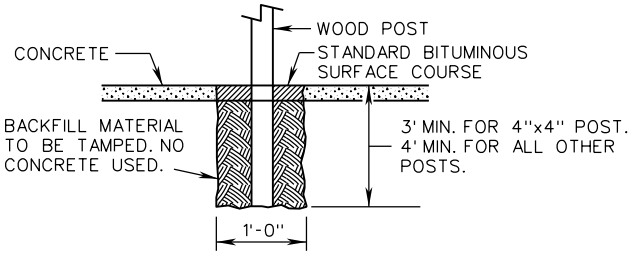

SET IN CONCRETE

METHOD OF POST DRILLING

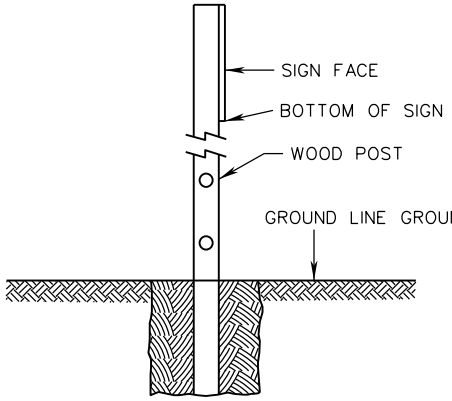

SIDE VIEW

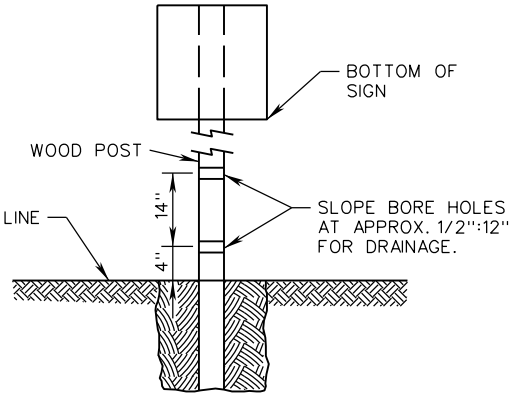

FRONT VIEW

NOTES:

1. 6" X 6" WOOD POST REQUIRES TWO 2" BORE HOLES.
2. 6" X 8" WOOD POST REQUIRES TWO 3" BORE HOLES.
3. POSTS LESS THAN 6" X 6" DO NOT REQUIRE BORE HOLES.

BRACING AND POST TOLERANCE DETAIL

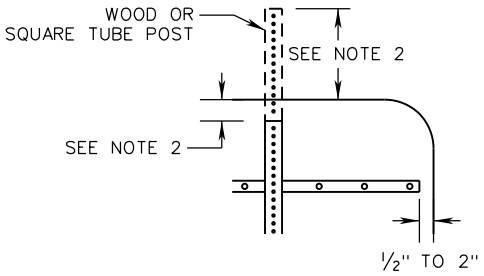

NOTES:

1. SIGN WIDTHS GREATER THAN 48" SHALL REQUIRE SIGN BRACING CONFORMING TO STANDARD STP-1.
2. THE TOP OF POST SHALL BE NO MORE THAN 2" BELOW AND NO MORE THAN 2 FEET ABOVE THE TOP OF THE SIGN.

A COPY OF THE ORIGINAL SEALED AND SIGNED DRAWING IS ON FILE IN THE CENTRAL OFFICE.

SPECIFICATION REFERENCE	TEMPORARY SIGNS (FOR CONSTRUCTION, MAINTENANCE, PERMIT AND UTILITY ACTIVITIES) WOOD OR SQUARE TUBE STEEL POST SIGN STRUCTURES VIRGINIA DEPARTMENT OF TRANSPORTATION	VDOT ROAD AND BRIDGE STANDARDS	
512 700		REVISION DATE 08/17	SHEET 2 OF 7 1320.11

WSP-1

DESIGN TABLE FOR WOOD POST

SIZE OF POST	CENTROID (FT)	MAXIMUM AREA (TOTAL OF SIGNS) (FT^2)			COMMENTS
		SINGLE-POST	TWO-POST	THREE-POST	
4" X 4"	8	7	13	20	SEE NOTE 1
	9	6	12	18	
	10	5	11	16	
	11	5	10	15	
	12	4	9	13	
4" X 6" (SEE NOTE 2)	8	18	37	55	
	9	16	33	49	
	10	15	29	44	
	11	13	27	40	
	12	12	25	37	
5" X 5"	8	15	31	46	
	9	14	27	41	
	10	12	24	37	
	11	11	22	33	
	12	10	20	31	
6" X 6"	8	29	58	87	
	9	26	51	77	
	10	23	46	69	
	11	21	42	63	
	12	19	39	58	
	13	18	36	53	
6" X 8" (SEE NOTE 2)	8	52	103	155	
	9	46	92	138	
	10	41	83	124	
	11	38	75	113	
	12	34	69	103	
	13	32	64	95	
	14	22	44	66	

NOTES:

1. FOR A SINGLE 4" X 4" POST THE MAXIMUM TOTAL SIGN CAN BE INCREASED TO 16 SQUARE FEET PROVIDED:

   A. THE MAXIMUM VERTICAL CLEARANCE BETWEEN THE GROUND LEVEL AND BOTTOM OF THE SIGN DOES NOT EXCEED 7'-6" WHILE MAINTAINING A 7'-0" MINIMUM MOUNTING HEIGHT (h) BETWEEN BOTTOM OF SIGN AND TOP OF ROADWAY SURFACE AT THE EDGE OF TRAVEL LANE.

   B. CONTRACTOR SUPPLIES DEPARTMENT WITH MATERIALS CERTIFICATION FOR WOOD POSTS TO ENSURE CONFORMANCE WITH SECTION 236 OF THE SPECIFICATIONS.

2. LARGER DIMENSION OF WOOD POST SHALL BE IN DIRECTION OF (PARALLEL TO) TRAFFIC.

3. CENTROID SHALL BE DETERMINED IN ACCORDANCE WITH STANDARD PCS-1.

A COPY OF THE ORIGINAL SEALED AND SIGNED DRAWING IS ON FILE IN THE CENTRAL OFFICE.

VDOT
ROAD AND BRIDGE STANDARDS

SHEET 3 OF 7
1320.12

REVISION DATE
08/17

TEMPORARY SIGNS
(FOR CONSTRUCTION, MAINTENANCE, PERMIT AND UTILITY ACTIVITIES)
WOOD POST SIGN STRUCTURES
VIRGINIA DEPARTMENT OF TRANSPORTATION

SPECIFICATION REFERENCE
512
700

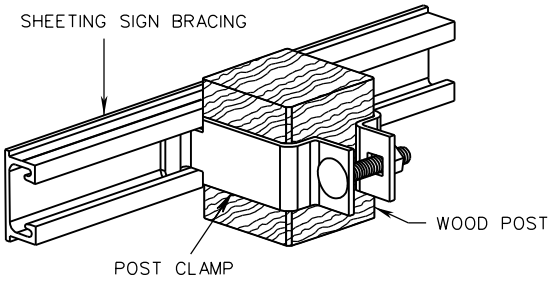

WOOD POST & BRACE
(CONNECTING JUNCTION)

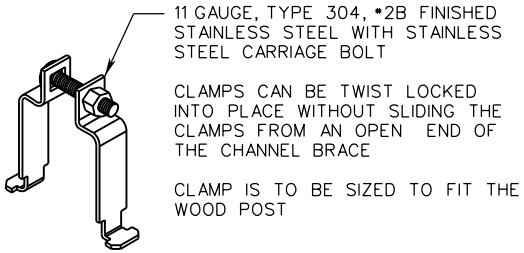

CLAMP DETAIL

NOTES:

1. NYLON WASHER SHALL BE 1/16" THICK MINIMUM WITH AN OUTSIDE DIAMETER OF 1" AND AN INSIDE DIAMETER OF 7/16".
2. DRIVE RIVET SHALL BE 3/16" OR 3/8" ALUMINUM FLAT HEAD RIVET WITH STEEL PINS AND NYLON OR RUBBER WASHER.
3. SIGN PANEL ATTACHMENTS TO SQUARE TUBE POSTS SHALL BE AS PER STANDARD STP-1.
4. THE HEADS OF ALL DRIVE RIVETS AND BOLTS PROTRUDING FROM TEMPORARY SIGNS MAY BE UNCOATED. IF POWDER COATED, THE HEADS SHALL MATCH THE COLOR OF THE SIGN SHEETING.
5. BOLTS, NUTS, AND LOCK WASHERS SHALL BE GALVANIZED OR STAINLESS STEEL.
6. DRIVE RIVET SHALL NOT BE USED FOR SIGNS WITHOUT BRACING

A COPY OF THE ORIGINAL SEALED AND SIGNED DRAWING IS ON FILE IN THE CENTRAL OFFICE.

SPECIFICATION REFERENCE	TEMPORARY SIGNS (FOR CONSTRUCTION, MAINTENANCE, PERMIT AND UTILITY ACTIVITIES) WOOD POST SIGN STRUCTURES - ATTACHMENT DETAILS VIRGINIA DEPARTMENT OF TRANSPORTATION	VDOT ROAD AND BRIDGE STANDARDS	
512 700		REVISION DATE 08/17	SHEET 4 OF 7 1320.13

WSP-1

WOOD POSTS NOT REQUIRING BRACING

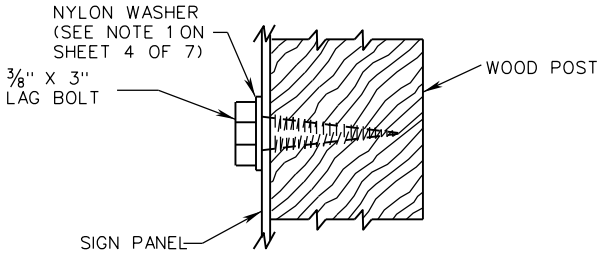

SINGLE SIGN PANEL DETAIL

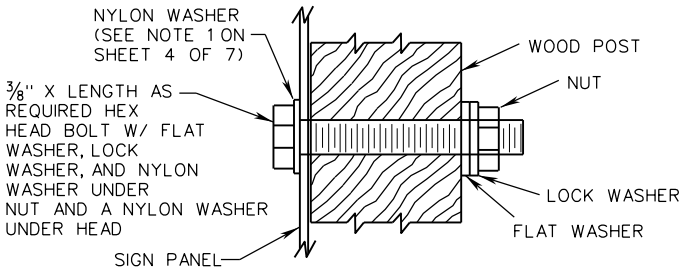

SINGLE SIGN PANEL ALTERNATE METHOD DETAIL

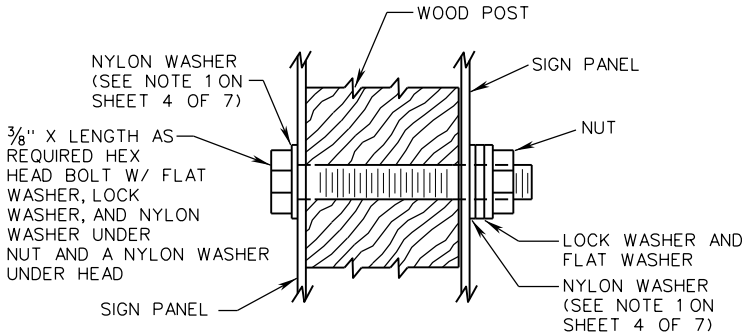

BACK-TO-BACK SIGN PANEL DETAIL

WOOD POSTS REQUIRING BRACING

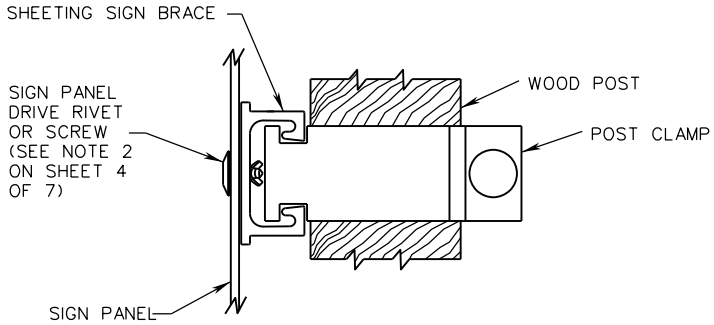

SIGN PANEL ATTACHMENT DETAIL

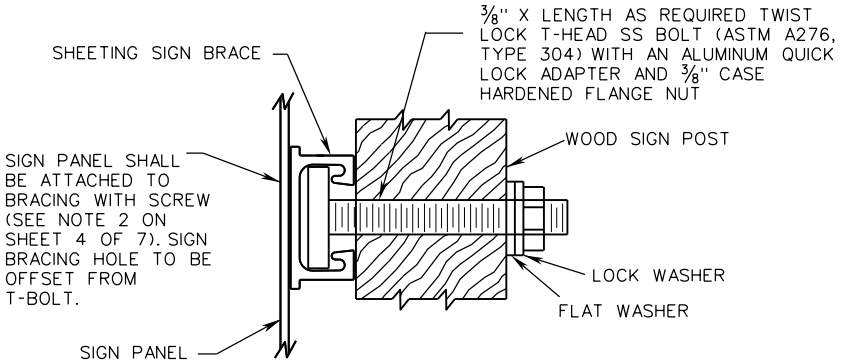

SINGLE SIGN PANEL ALTERNATE METHOD DETAIL

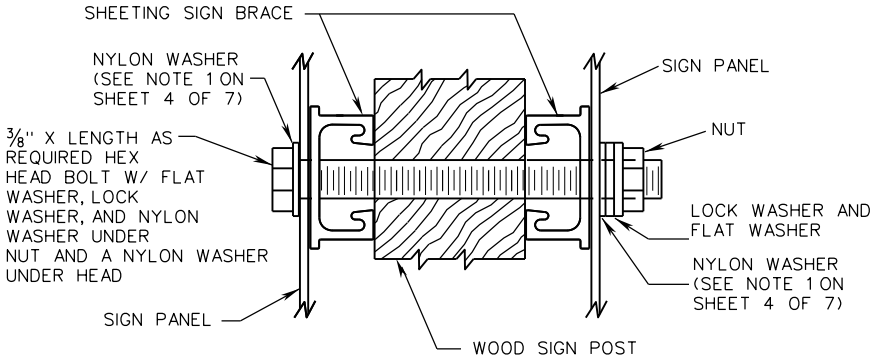

BACK-TO-BACK SIGN PANEL DETAIL

NOTES:

1. SEE SHEET 4 OF 7 FOR NOTES.

VDOT ROAD AND BRIDGE STANDARDS	A COPY OF THE ORIGINAL SEALED AND SIGNED DRAWING IS ON FILE IN THE CENTRAL OFFICE.		SPECIFICATION REFERENCE
SHEET 5 OF 7	TEMPORARY SIGNS (FOR CONSTRUCTION, MAINTENANCE, PERMIT AND UTILITY ACTIVITIES) WOOD POST SIGN STRUCTURES - ATTACHMENT DETAILS	REVISION DATE 08/17	512 700
1320.14	VIRGINIA DEPARTMENT OF TRANSPORTATION		

DESIGN TABLE FOR SQUARE TUBE POST

SIZE OF POST	CENTROID (FT)	MAXIMUM AREA (TOTAL OF SIGNS) (FT^2)			COMMENTS
		SINGLE-POST	TWO-POST	THREE-POST	
2 INCH 14 GA.	8	10.7	21.4		TYPE A, TYPE D, OR TYPE F FOUNDATION (SEE NOTE 4)
	9	9.5	19.0		
	10	8.5	17.0		
	11	7.7	15.4		
	12	7.1	14.2		
	13	6.5	13.0		
	14	6.1	12.2		
2½ INCH 12 GA.	8	21.5			TYPE A OR TYPE E FOUNDATION (SEE NOTE 4)
	9	19.1			
	10	17.2			
	11	15.6			
	12	14.3			
	13	13.2			
	14	12.3			
2½ INCH 10 GA.	8	24.8	49.6	74.4	TYPE B OR TYPE C FOUNDATION (SEE NOTE 4)
	9	22.0	44.0	66.0	
	10	19.8	39.6	59.4	
	11	18.0	36.0	54.0	
	12	16.5	33.0	49.5	
	13	15.2	30.4	45.6	
	14	14.1	28.2	42.3	
2½ INCH 10 GA. WITH 2 3/16 INCH 10 GA. INNER POST (SEE NOTE 1)	8	43.4	86.8	130.2	TYPE B OR TYPE C FOUNDATION (SEE NOTE 4)
	9	38.6	77.2	115.8	
	10	34.7	69.4	104.1	
	11	31.6	63.2	94.8	
	12	28.9	57.8	86.7	
	13	26.7	53.4	80.1	
	14	24.8	49.6	74.4	

NOTES:

1. THE INNER POST SHALL BE 6 FEET IN LENGTH.
2. CENTROID SHALL BE DETERMINED IN ACCORDANCE WITH PCS-1.
3. MINIMUM COLD FORMED YIELD STRENGTH SHALL BE:
   14 GA. AND 12 GA. = 60 KSI
   10 GA. = 55 KSI
4. TYPE A, B, C, D, E, AND F FOUNDATIONS SHALL BE IN ACCORDANCE WITH STANDARD STP-1.

A COPY OF THE ORIGINAL SEALED AND SIGNED DRAWING IS ON FILE IN THE CENTRAL OFFICE.

SPECIFICATION REFERENCE	TEMPORARY SIGNS	VDOT ROAD AND BRIDGE STANDARDS
512 700	(FOR CONSTRUCTION, MAINTENANCE, PERMIT AND UTILITY ACTIVITIES) SQUARE TUBE POST SIGN STRUCTURES VIRGINIA DEPARTMENT OF TRANSPORTATION	REVISION DATE 08/17 — SHEET 6 OF 7 — 1320.15

WSP-1

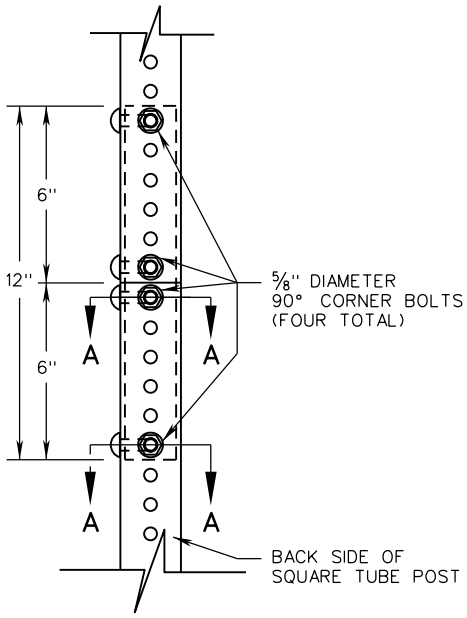

SPLICE DETAIL

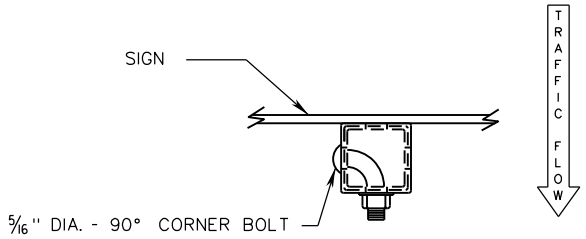

SECTION A-A
CORNER BOLT DETAIL

SPLICE SIZE TABLE	
POST SIZE	SPLICE POST SIZE
2 INCH, 14 GAUGE	1 3/4 INCH, 14 GAUGE
2 1/2 INCH, 12 GAUGE	2 1/4 INCH, 12 GAUGE
2 1/2 INCH, 10 GAUGE	2 3/16 INCH, 10 GAUGE

NOTES:

1. ONLY ONE SPLICE PER POST WILL BE ALLOWED.
2. SPLICES SHALL BE A MINIMUM OF 24" ABOVE GROUND LINE.
3. SPLICES SHALL ONLY BE PERMITTED FOR TEMPORARY INSTALLATIONS.
4. CORNER BOLTS SHALL BE INSTALLED SO THE BOLT HEADS ARE ON ONE SIDE OF THE SIGN POST. THE NUT SHALL BE ON THE BACK OF THE POST. SEE SPLICE DETAIL.

A COPY OF THE ORIGINAL SEALED AND SIGNED DRAWING IS ON FILE IN THE CENTRAL OFFICE.

VDOT
ROAD AND BRIDGE STANDARDS

SHEET 7 OF 7
1320.16

REVISION DATE
NEW 08/17

TEMPORARY SIGNS
(FOR CONSTRUCTION, MAINTENANCE, PERMIT AND UTILITY ACTIVITIES)
SQUARE TUBE POST SIGN STRUCTURES
VIRGINIA DEPARTMENT OF TRANSPORTATION

SPECIFICATION REFERENCE
512
700

STP-1

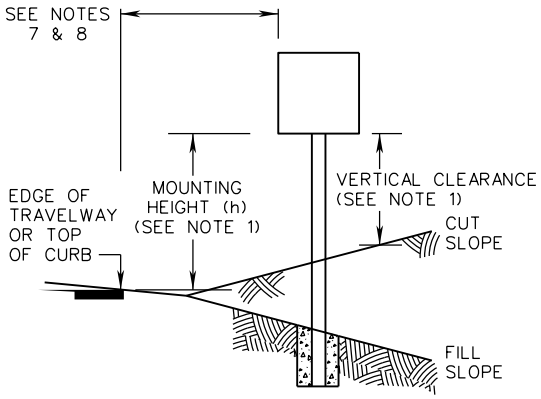

SINGLE POST INSTALLATIONS

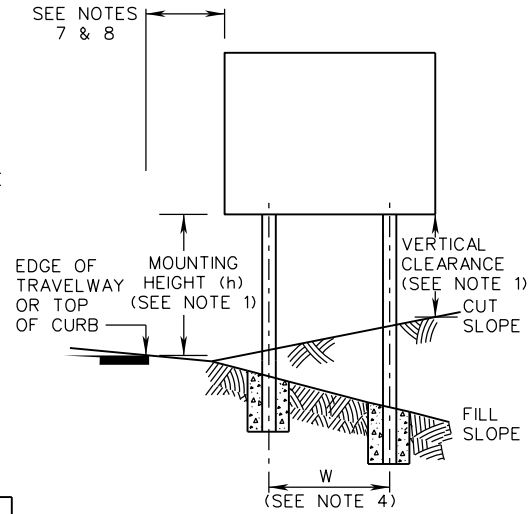

TWO POST INSTALLATIONS

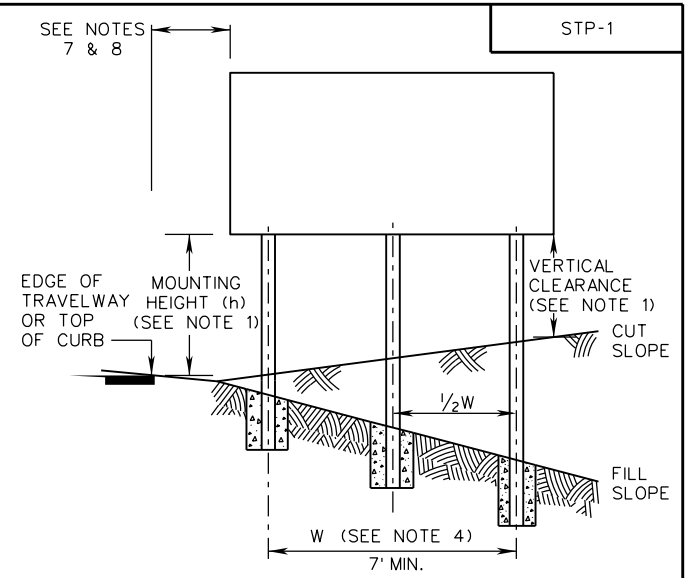

THREE POST INSTALLATIONS

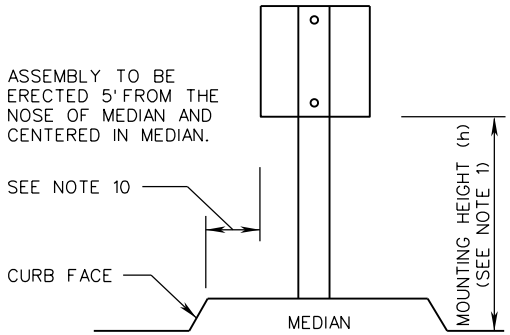

SINGLE POST MEDIAN INSTALLATIONS

MINIMUM MOUNTING HEIGHT (h) (SEE NOTE 1)

SIGN TYPES	FREEWAYS, EXPRESSWAYS, AND FULL CONTROL ACCESS HIGHWAYS	OTHER HIGHWAYS	
		RURAL AREAS	NON-RURAL AREAS
DIRECTIONAL SIGNS	7'	5'	7'
ROUTE MARKERS, WARNING AND REGULATORY SIGNS	7'	5'	7'
SECONDARY SIGNS (SEE NOTE 3)	5'	4'	7'

NOTES:

1. FOR ALL SIGNS EXCEPT STREET NAME SIGNS:
   A. MINIMUM MOUNTING HEIGHT (h) SHALL BE IN ACCORDANCE WITH THE "MINIMUM MOUNTING HEIGHT" TABLE ON THIS SHEET. MOUNTING HEIGHT IS MEASURED FROM THE ROADWAY ELEVATION AT THE EDGE OF THE TRAVEL WAY TO THE BOTTOM OF THE SIGN PANEL.
   B. MAXIMUM MOUNTING HEIGHT (h) FOR THE BOTTOM-MOST SIGN PANEL(S) SHALL BE 8 FEET, EXCEPT WHEN NECESSARY TO ACHIEVE MINIMUM VERTICAL CLEARANCE BENEATH SIGN PANEL AS PER NOTE 1C.
   C. MINIMUM VERTICAL CLEARANCE (DISTANCE BETWEEN BOTTOM OF SIGN PANEL AND FINISHED GRADE BENEATH THE PANEL) SHALL BE 7 FEET FOR ANY PORTION OF THE SIGN WITHIN THE CLEAR ZONE. THIS MINIMUM VERTICAL CLEARANCE MAY BE REDUCED TO 5 FEET FOR EITHER OF THE FOLLOWING CONDITIONS:
      - WHEN SIGNS OR PORTIONS OF SIGNS ARE LOCATED MORE THAN 10 FEET UP A CUT SLOPE GREATER THAN 3:1, OR
      - WHEN THE SIGN IS LOCATED AT LEAST THE MINIMUM DISTANCE BEHIND CURB, BARRIER, OR GUARDRAIL AS PER NOTES 7 AND 8.
2. MOUNTING HEIGHT (h) FOR STREET NAME SIGNS SHALL BE BETWEEN 8'-6" AND 9'-0".
3. A SECONDARY SIGN IS CONSIDERED TO BE A SIGN MOUNTED BELOW ANOTHER SIGN, EXCEPT A ROUTE MARKER WITH AN AUXILIARY PLATE IS CONSIDERED TO BE A SINGLE SIGN. A SECONDARY SIGN SHALL NOT BE MOUNTED LOWER THAN 7 FEET ABOVE A PEDESTRIAN SIDEWALK OR PATHWAY IF IT WILL PROJECT INTO THE PEDESTRIAN FACILITY.
4. W = (0.60) X (SIGN PANEL WIDTH)
5. SQUARE TUBE SIGN POSTS REQUIRING A BREAKAWAY SUPPORT SYSTEM SHALL BE AN FHWA APPROVED BREAKAWAY SUPPORT SYSTEM CONFORMING TO AASHTO'S STANDARD SPECIFICATIONS FOR STRUCTURAL SUPPORTS FOR HIGHWAY SIGNS, LUMINIARIES AND TRAFFIC SIGNALS.
6. FOR SIGNS LOCATED IN AREAS WHERE PEDESTRIAN MOVEMENTS ARE LIKELY TO OCCUR OR ON-STREET PARKING IS PERMITTED, THE HEIGHT FROM THE LOWEST PORTION OF THE SIGN PANEL TO THE FINISHED SURFACE SHALL HAVE A MINIMUM CLEARANCE OF 7 FEET.
7. THE LATERAL CLEARANCE TO THE SIGN PANEL SHALL BE A MINIMUM OF 2 FEET FROM THE FACE OF CURB OR 4 FEET FROM FACE OF BARRIER, IF PRESENT.
8. UNLESS OTHERWISE APPROVED BY THE ENGINEER, SIGNS PLACED BEHIND GUARDRAIL SHALL BE LOCATED SUCH THAT THE NEAR SIDE EDGE OF THE SIGN PANEL IS OUTSIDE OF THE GUARDRAIL DEFLECTION DISTANCE.
9. FOR SIGNS AT INTERCHANGE EXIT RAMPS, REFER TO STANDARD ISD-1.
10. 2' MINIMUM FOR MEDIANS OVER 10' IN WIDTH. 12" MINIMUM FOR MEDIANS 10' OR LESS IN WIDTH UNLESS SHOWN OTHERWISE IN THE CONTRACT DOCUMENTS.

SPECIFICATION REFERENCE	A COPY OF THE ORIGINAL SEALED AND SIGNED DRAWING IS ON FILE IN THE CENTRAL OFFICE.	VDOT ROAD AND BRIDGE STANDARDS
700	SQUARE TUBE SIGN POST VIRGINIA DEPARTMENT OF TRANSPORTATION	REVISION DATE 08/17 SHEET 1 OF 12 1321.10

STP-1

TABLE 1
FOR HAMPTON ROADS DISTRICT (SEE NOTE 5)

SIZE OF POST	CENTROID (FT)	MAXIMUM AREA (TOTAL OF SIGN PANELS) (FT^2)			COMMENTS
		SINGLE-POST	TWO-POST	THREE-POST	
2 INCH 14 GA.	8	5.8			TYPE A, TYPE D, OR TYPE F FOUNDATION AS SPECIFIED IN THE CONTRACT DOCUMENTS.
	9	5.1			
	10	4.6			
	11	4.2			
	12	3.8			
	13	3.5			
	14	3.3			
2½ INCH 12 GA.	8	11.8	23.6		SINGLE POST: TYPE A OR TYPE E FOUNDATION. MULTI-POST: TYPE B OR TYPE C FOUNDATION. AS SPECIFIED IN THE CONTRACT DOCUMENTS.
	9	10.5	21.0		
	10	9.4	18.8		
	11	8.6	17.2		
	12	7.8	15.6		
	13	7.2	14.5		
	14	6.7	13.5		
2½ INCH 10 GA.	8	13.6	27.2	40.8	TYPE B OR TYPE C FOUNDATION AS SPECIFIED IN THE CONTRACT DOCUMENTS.
	9	12.1	24.2	36.3	
	10	10.9	21.8	32.7	
	11	9.9	19.8	29.7	
	12	9.1	18.2	27.3	
	13	8.4	16.8	25.2	
	14	7.8	15.6	23.4	
2½ INCH 10 GA. WITH 2³⁄₁₆ INCH 10 GA. INNER POST (SEE NOTE 1)	8	23.9	47.8	71.7	TYPE B OR TYPE C FOUNDATION AS SPECIFIED IN THE CONTRACT DOCUMENTS.
	9	21.2	42.4	63.6	
	10	19.1	38.2	57.3	
	11	17.4	34.8	52.2	
	12	15.9	31.8	47.7	
	13	14.7	29.4	44.1	
	14	13.6	27.2	40.8	

NOTES:

1. THE INNER POST SHALL BE 6 FEET IN LENGTH.
2. CENTROID SHALL BE DETERMINED IN ACCORDANCE WITH PCS-1.
3. MINIMUM COLD FORMED YIELD STRENGTH SHALL BE:
   14 GA. AND 12 GA. = 60 KSI
   10 GA. = 55 KSI
4. FOLLOW SIGN BRACING DETAILS (SEE SHEET 11 OF 12) FOR MAXIMUM SIGN PANEL WIDTHS AND SIGN BRACING SPACING.
5. TABLE 1 SHALL BE USED FOR THE HAMPTON ROADS DISTRICT, EXCEPT THE CITY OF EMPORIA AND COUNTIES OF GREENSVILLE, SUSSEX, AND SOUTHAMPTON SHALL USE TABLE 2.

A COPY OF THE ORIGINAL SEALED AND SIGNED DRAWING IS ON FILE IN THE CENTRAL OFFICE.

SQUARE TUBE SIGN POST

VIRGINIA DEPARTMENT OF TRANSPORTATION

SPECIFICATION REFERENCE
700

2016 ROAD & BRIDGE STANDARDS

TABLE 2
FOR BRISTOL, SALEM, LYNCHBURG, RICHMOND, FREDERICKSBURG, CULPEPER, STAUNTON, AND NORTHERN VIRGINIA DISTRICTS (SEE NOTE 5)

SIZE OF POST	CENTROID (FT)	MAXIMUM AREA (TOTAL OF SIGN PANELS) (FT^2)			COMMENTS
		SINGLE-POST	TWO-POST	THREE-POST	
2 INCH 14 GA.	8	10.7	21.4		TYPE A, TYPE D, OR TYPE F FOUNDATION AS SPECIFIED IN THE CONTRACT DOCUMENTS.
	9	9.5	19.0		
	10	8.5	17.0		
	11	7.7	15.4		
	12	7.1	14.2		
	13	6.5	13.0		
	14	6.1	12.2		
2½ INCH 12 GA.	8	21.5			TYPE A OR TYPE E FOUNDATION.
	9	19.1			
	10	17.2			
	11	15.6			
	12	14.3			
	13	13.2			
	14	12.3			
2½ INCH 10 GA.	8	24.8	49.6	74.4	TYPE B OR TYPE C FOUNDATION AS SPECIFIED IN THE CONTRACT DOCUMENTS.
	9	22.0	44.0	66.0	
	10	19.8	39.6	59.4	
	11	18.0	36.0	54.0	
	12	16.5	33.0	49.5	
	13	15.2	30.4	45.6	
	14	14.1	28.2	42.3	
2½ INCH 10 GA. WITH 2 3/16 INCH 10 GA. INNER POST (SEE NOTE 1)	8	43.4	86.8	130.2	TYPE B OR TYPE C FOUNDATION AS SPECIFIED IN THE CONTRACT DOCUMENTS.
	9	38.6	77.2	115.8	
	10	34.7	69.4	104.1	
	11	31.6	63.2	94.8	
	12	28.9	57.8	86.7	
	13	26.7	53.4	80.1	
	14	24.8	49.6	74.4	

NOTES:

1. THE INNER POST SHALL BE 6 FEET IN LENGTH.
2. CENTROID SHALL BE DETERMINED IN ACCORDANCE WITH PCS-1.
3. MINIMUM COLD FORMED YIELD STRENGTH SHALL BE:
   14 GA. AND 12 GA. = 60 KSI
   10 GA. = 55 KSI
4. FOLLOW SIGN BRACING DETAILS (SEE SHEET 11 OF 12) FOR MAXIMUM SIGN PANEL WIDTHS AND SIGN BRACING SPACING.
5. TABLE 2 SHALL ALSO BE USED FOR THE CITY OF EMPORIA AND COUNTIES OF GREENSVILLE, SUSSEX, AND SOUTHAMPTON IN HAMPTON ROADS DISTRICT.

STP-1

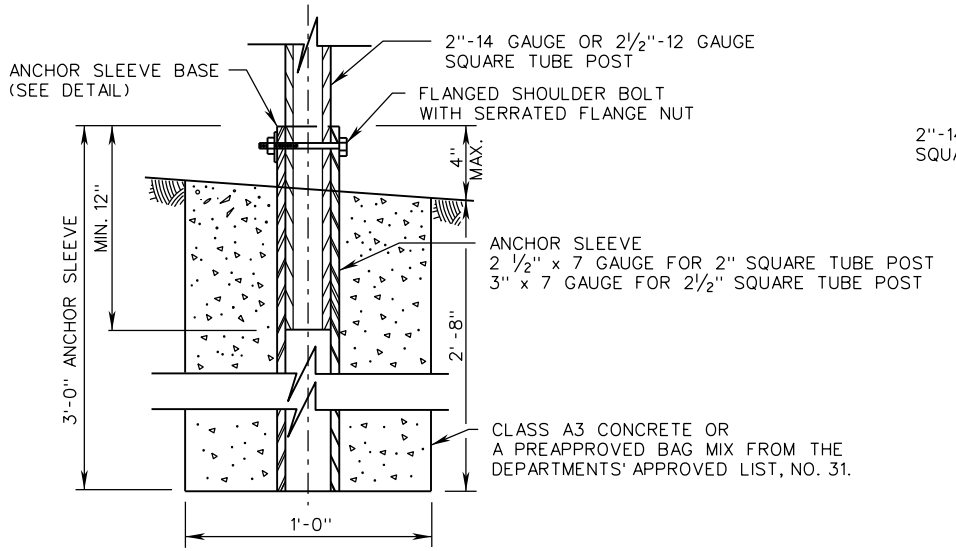

FOUNDATION TYPE A

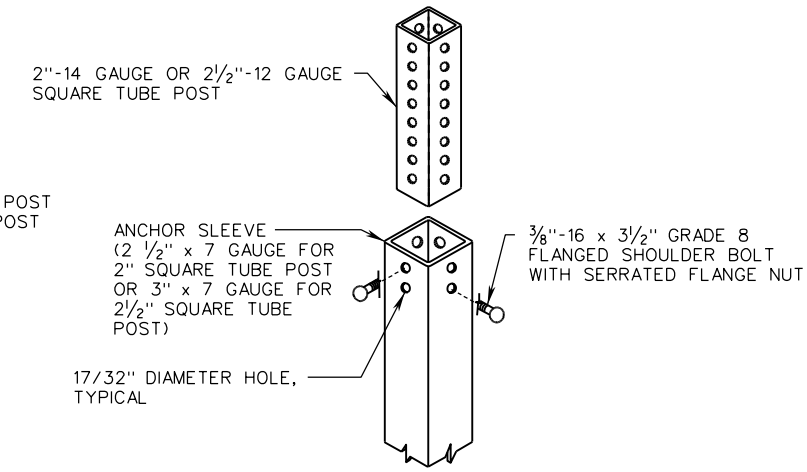

ANCHOR SLEEVE BASE DETAIL

VDOT ROAD AND BRIDGE STANDARDS	A COPY OF THE ORIGINAL SEALED AND SIGNED DRAWING IS ON FILE IN THE CENTRAL OFFICE.		SPECIFICATION REFERENCE
SHEET 4 OF 12	SQUARE TUBE SIGN POST		700
1321.13	FOUNDATION TYPE A DETAILS	REVISION DATE NEW 01/15	
	VIRGINIA DEPARTMENT OF TRANSPORTATION		

STP-1

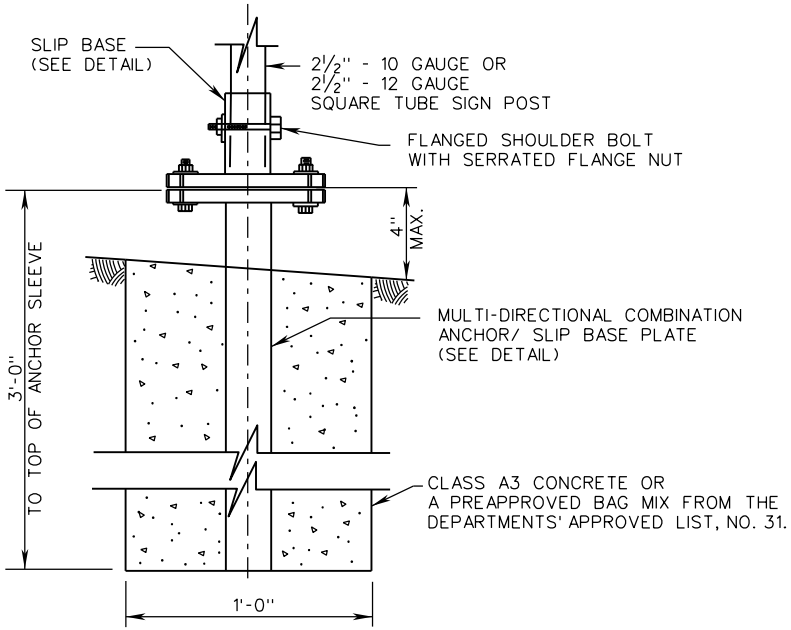

FOUNDATION TYPE B

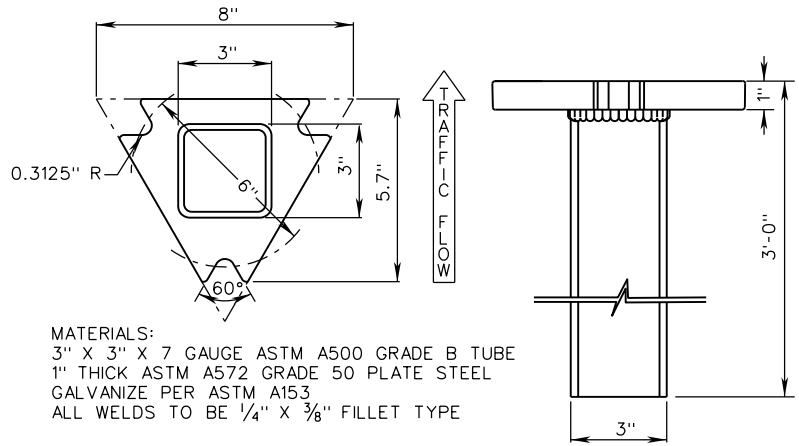

MATERIALS:
3" X 3" X 7 GAUGE ASTM A500 GRADE B TUBE
1" THICK ASTM A572 GRADE 50 PLATE STEEL
GALVANIZE PER ASTM A153
ALL WELDS TO BE ¼" X ⅜" FILLET TYPE

MULTI-DIRECTIONAL COMBINATION
ANCHOR/SLIP BASE PLATE

SPECIFICATION REFERENCE	A COPY OF THE ORIGINAL SEALED AND SIGNED DRAWING IS ON FILE IN THE CENTRAL OFFICE.	VDOT ROAD AND BRIDGE STANDARDS	
700	SQUARE TUBE SIGN POST FOUNDATION TYPE B DETAILS VIRGINIA DEPARTMENT OF TRANSPORTATION	REVISION DATE NEW 01/15	SHEET 5 OF 12 1321.14

STP-1

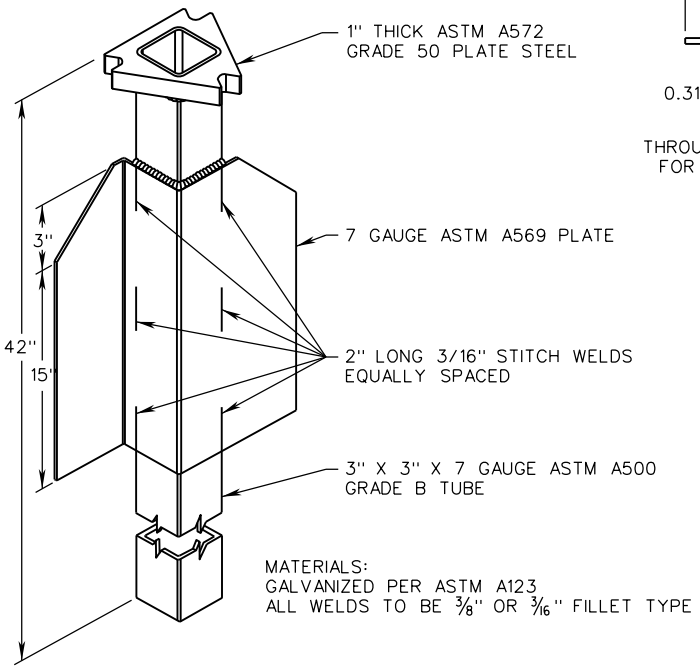

FOUNDATION TYPE C

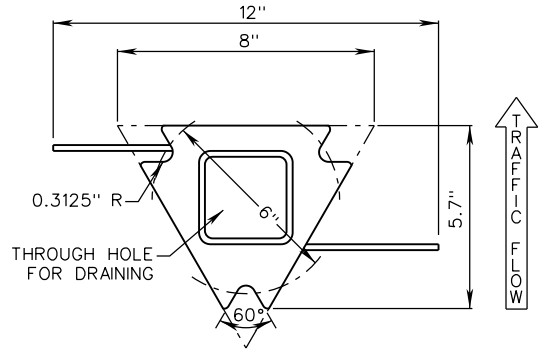

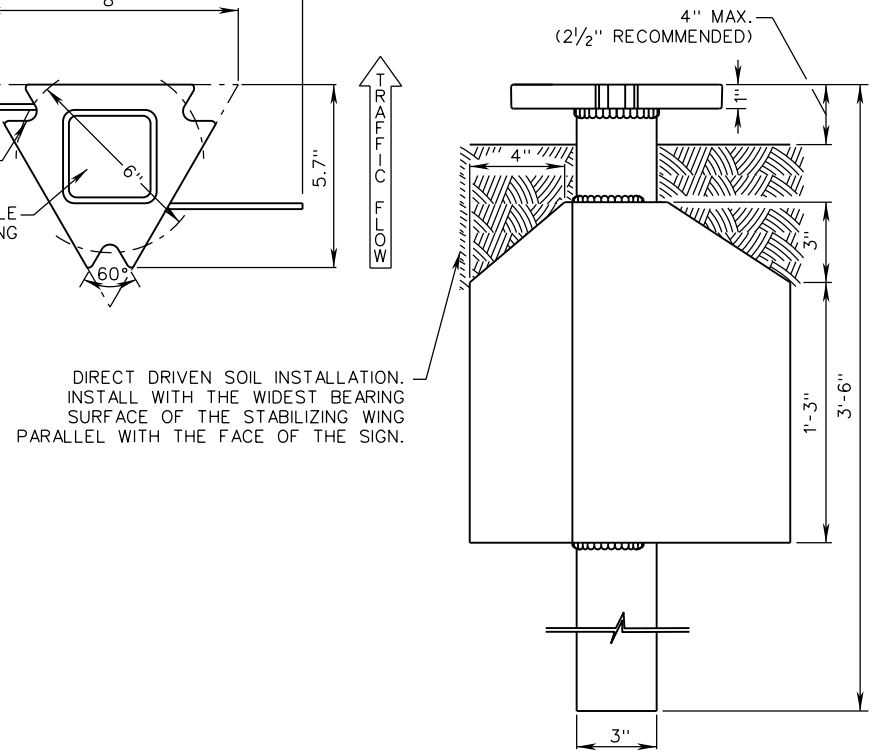

8" TRIANGULAR MULTI-DIRECTIONAL
COMBINATION ANCHOR/SLIP BASE PLATE - SOIL

VDOT ROAD AND BRIDGE STANDARDS		A COPY OF THE ORIGINAL SEALED AND SIGNED DRAWING IS ON FILE IN THE CENTRAL OFFICE.	SPECIFICATION REFERENCE
SHEET 6 OF 12	REVISION DATE	SQUARE TUBE SIGN POST	
1321.15	NEW 01/15	FOUNDATION TYPE C DETAILS	700
		VIRGINIA DEPARTMENT OF TRANSPORTATION	

STP-1

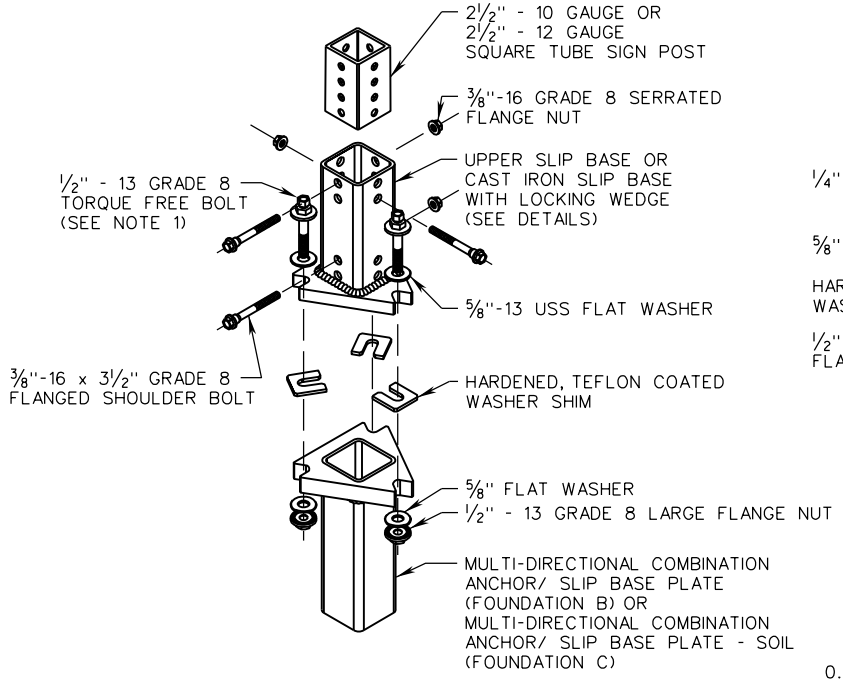

SLIP BASE BREAKAWAY DETAIL

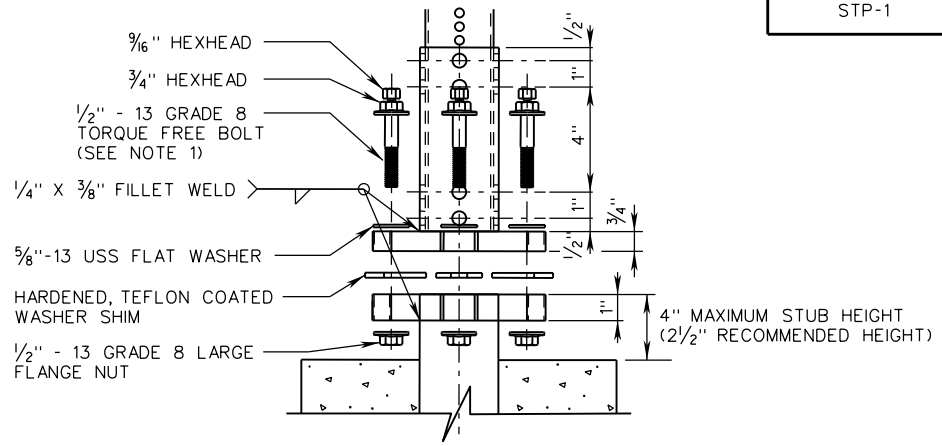

SLIP BASE BREAKAWAY PROFILE DETAIL

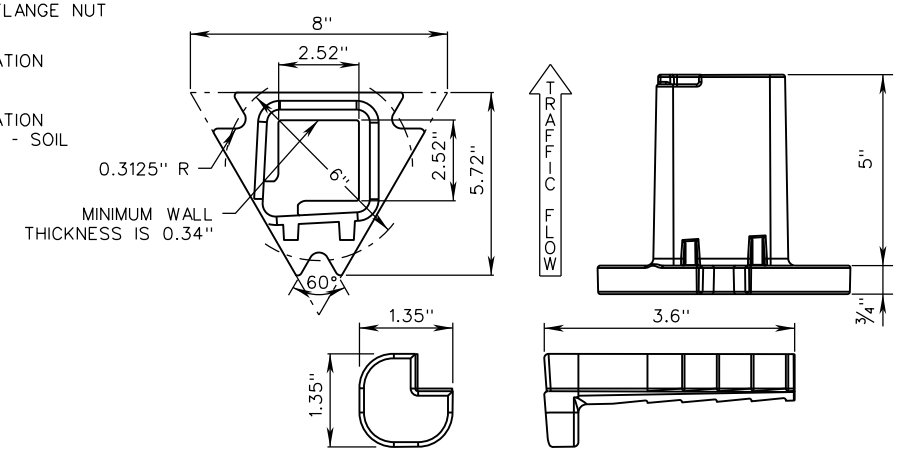

REDI-TORQUE MULTI-DIRECTIONAL BOLT ON SAE1035 STEEL FORGING SLIP BASE TOP FOR 2½" SQUARE POST WITH CAST IRON LOCKING WEDGE

MATERIALS:
TUBE RECEIVER -
3" x 3" x 7 GAUGE
ASTM A500
GRADE B TUBE
PLATE - ASTM
A572 GRADE 50

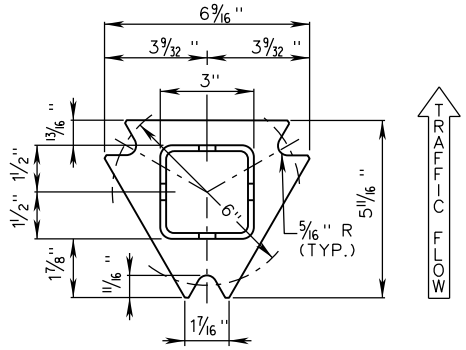

TOP POST RECEIVER/
FOR 2½" SQUARE POST

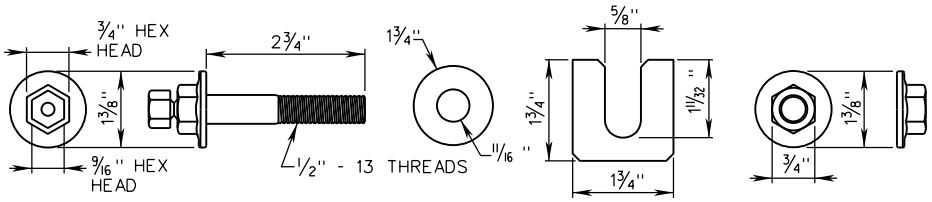

TORQUE FREE MATCH PLATE HARDWARE

NOTES:

1. TIGHTEN THE TORQUE FREE BOLT USING THE LARGER ¾" HEX HEAD, THEN LOOSEN THE BOLTS BY THREE COMPLETE TURNS USING THE ¾" HEX HEAD. RETIGHTEN EACH TORQUE BOLT USING THE SMALLER 9/16" HEX HEAD UNTIL THE 9/16" HEX HEAD TWISTS OFF.

SPECIFICATION REFERENCE	A COPY OF THE ORIGINAL SEALED AND SIGNED DRAWING IS ON FILE IN THE CENTRAL OFFICE.	VDOT ROAD AND BRIDGE STANDARDS	
700	SQUARE TUBE SIGN POST FOUNDATION TYPE B AND C DETAILS VIRGINIA DEPARTMENT OF TRANSPORTATION	REVISION DATE NEW 01/15	SHEET 7 OF 12 1321.16

STP-1

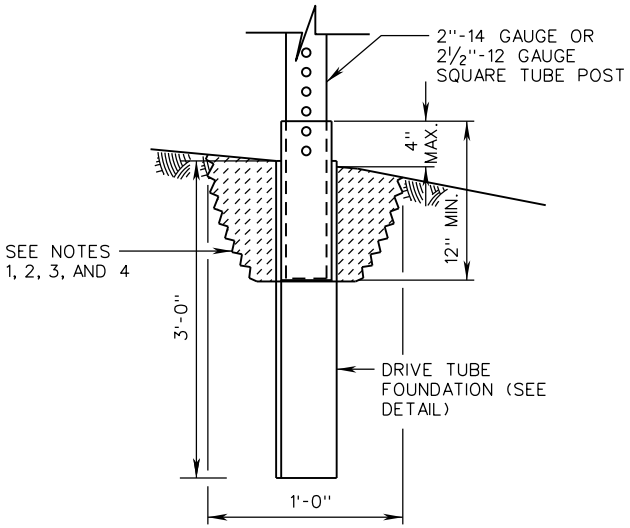

FOUNDATION TYPE D AND E

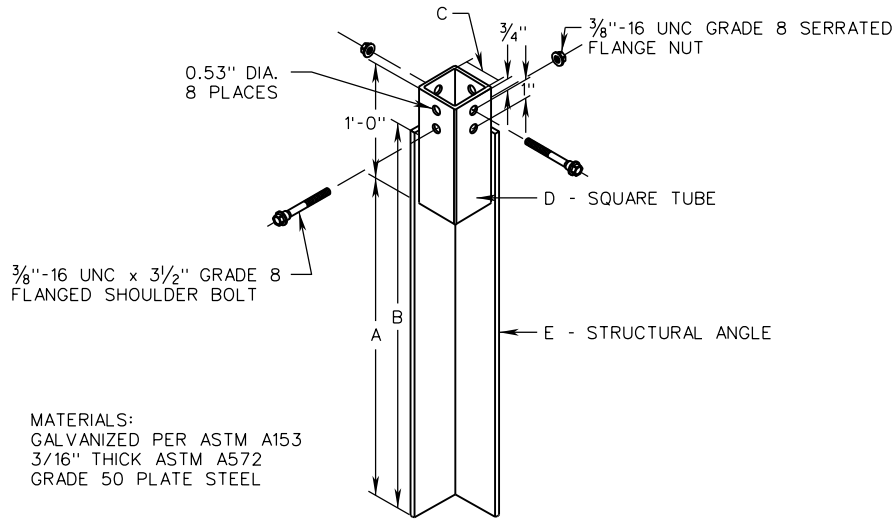

DRIVE TUBE FOUNDATION DETAIL

NOTES:

1. EXCAVATE TO A DEPTH OF NO LESS THAN 8" AND NO GREATER THAN 12" PRIOR TO INSTALLATION OF DRIVE TUBE FOUNDATION.
2. THE EXCAVATED AREA SHALL BE BACKFILLED WITH A CEMENTITIOUS MATERIAL AND SHALL BE TAPPED WITH EACH 6" LIFT.
3. THE SQUARE TUBE POST SHALL BE INSERTED INTO THE SLEEVE OF THE DRIVE TUBE FOUNDATION A MINIMUM OF 12".
4. DRIVE CAP SHALL BE UTILIZED FOR INSTALLATION OF DRIVE TUBE FOUNDATION. WHEN USING A POWER DRIVER, A SHANK SHALL ALSO BE REQUIRED.

DRIVE TUBE FOUNDATION TABLE

FOUNDATION TYPE	SIZE OF POST	DRIVE TUBE FOUNDATION DIMENSION	
TYPE D	2 INCH 14 GA.	A	27"
		B	36"
		C	2⅛"
		D	2½" X 2½" X 3/16" ASTM A500 GRADE B
		E	2½" X 2½" X 3/16" ASTM A36
TYPE E	2½ INCH 12 GA.	A	27"
		B	36"
		C	2⅝"
		D	3" X 3" X 3/16" ASTM A500 GRADE B
		E	3" X 3" X 3/16" ASTM A36

VDOT
ROAD AND BRIDGE STANDARDS

SHEET 8 OF 12
1321.17

REVISION DATE
08/17

A COPY OF THE ORIGINAL SEALED AND SIGNED DRAWING IS ON FILE IN THE CENTRAL OFFICE.

SQUARE TUBE SIGN POST

FOUNDATION TYPE D AND E DETAILS

VIRGINIA DEPARTMENT OF TRANSPORTATION

SPECIFICATION REFERENCE
700

STP-1

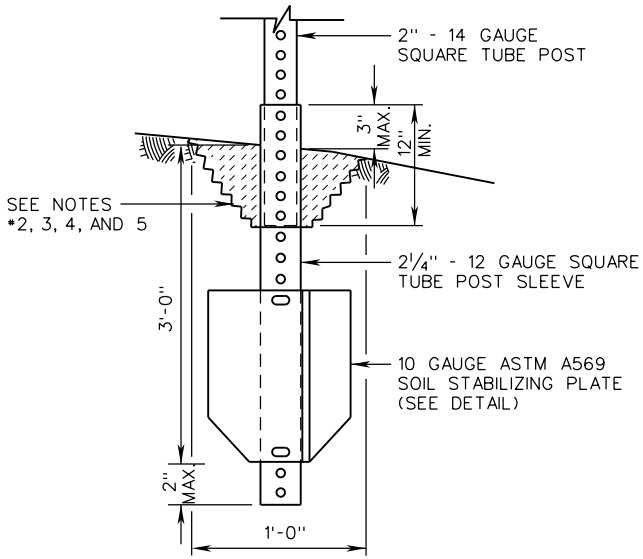

FOUNDATION TYPE F

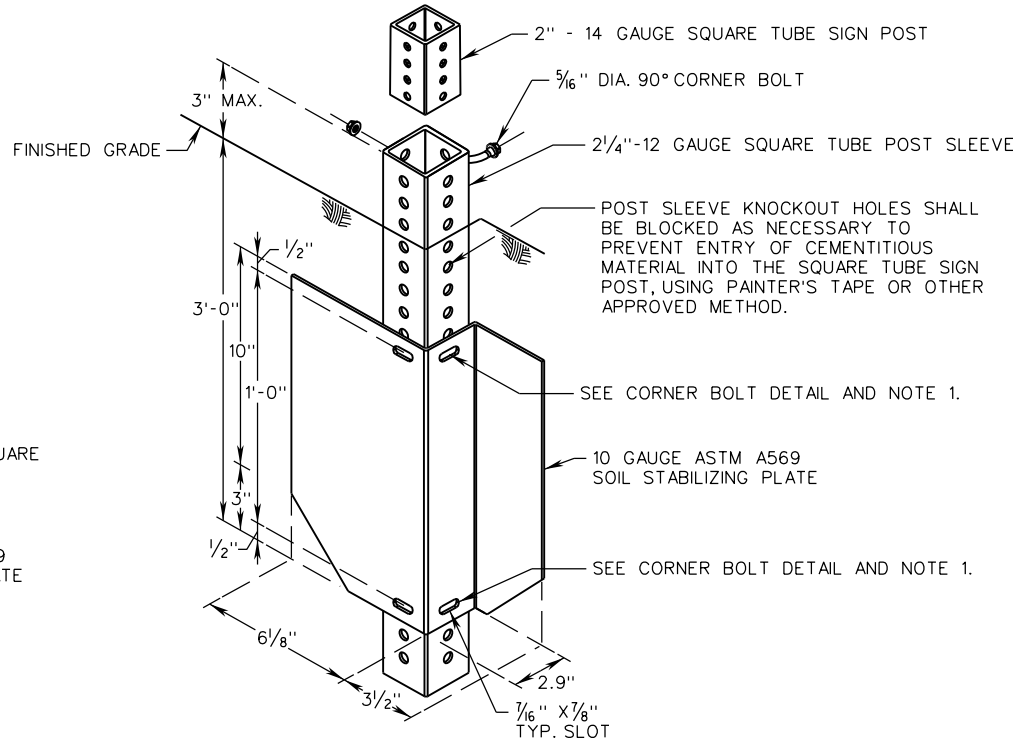

SOIL STABILIZING PLATE FOUNDATION DETAIL

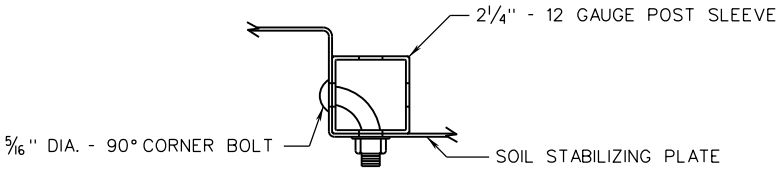

CORNER BOLT DETAIL

NOTES:

1. CORNER BOLTS SHALL BE 5/16" DIA. TRUSS HEAD BOLT WITH SERRATED FLANGE NUT. TWO CORNER BOLTS WILL BE REQUIRED TO CONNECT THE 2¼" POST SLEEVE TO THE SOIL STABILIZING PLATE.
2. EXCAVATE TO A DEPTH OF NO LESS THAN 8" AND NO GREATER THAN 12" PRIOR TO INSTALLATION OF SOIL STABILIZING PLATE FOUNDATION.
3. THE EXCAVATED AREA SHALL BE BACKFILLED WITH A CEMENTITIOUS MATERIAL AND SHALL BE TAPPED WITH EACH 6" LIFT.
4. THE 2" SQUARE TUBE POST SHALL BE INSERTED INTO THE 2¼" POST SLEEVE A MINIMUM OF 12".
5. DRIVE CAP SHALL BE UTILIZED FOR INSTALLATION OF DRIVE TUBE FOUNDATION. WHEN USING A POWER DRIVER, A SHANK SHALL ALSO BE REQUIRED.

SPECIFICATION REFERENCE	A COPY OF THE ORIGINAL SEALED AND SIGNED DRAWING IS ON FILE IN THE CENTRAL OFFICE.	VDOT ROAD AND BRIDGE STANDARDS	
700	SQUARE TUBE SIGN POST FOUNDATION TYPE F DETAILS VIRGINIA DEPARTMENT OF TRANSPORTATION	REVISION DATE NEW 01/15	SHEET 9 OF 12 1321.18

STP-1

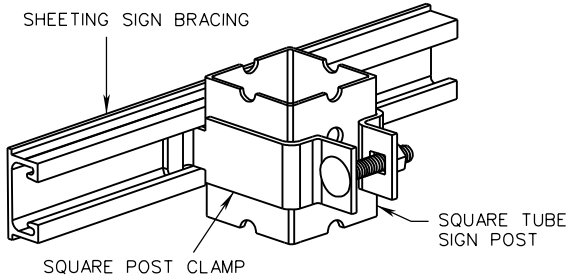

SQUARE POST CLAMP & BRACE
(CONNECTING JUNCTION)

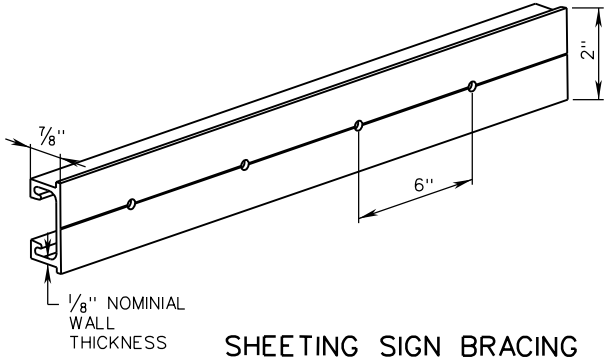

ALUMINUM SIGN BRACING 2" MOUNTING SURFACE x 7/8" DEPTH x 1/8" NOMINAL WALL THICKNESS

6061-T6 ALUMINUM ALLOY, PUNCHED WITH 3/16" DIAMETER HOLES ON 6" CENTERS FOR ATTCHMENT OF SIGN SUBSTRATE USING SIGN PANEL 3/16" DRIVE RIVETS, OR 3/8" DIAMETER HOLES ON 12" CENTERS WHEN USING 3/8" DRIVE RIVETS.

SHEETING SIGN BRACING

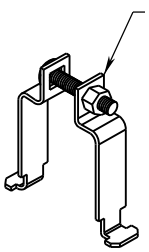

11 GAUGE, TYPE 304, #2B FINISHED STAINLESS STEEL WITH STAINLESS STEEL CARRIAGE BOLT

CLAMPS CAN BE TWIST LOCKED INTO PLACE WITHOUT SLIDING THE CLAMPS FROM AN OPEN END OF THE CHANNEL BRACE

CLAMP IS TO BE SIZED TO FIT THE SQUARE TUBE POST, 2" OR 2 1/2"

SQUARE POST CLAMP DETAIL

NOTES:

1. SEE SHEET 12 OF 12 FOR SIGN PANEL ATTACHMENT DETAILS.

A COPY OF THE ORIGINAL SEALED AND SIGNED DRAWING IS ON FILE IN THE CENTRAL OFFICE.

VDOT ROAD AND BRIDGE STANDARDS	SQUARE TUBE SIGN POST SIGN BRACING DETAILS VIRGINIA DEPARTMENT OF TRANSPORTATION	SPECIFICATION REFERENCE
SHEET 10 OF 12	REVISION DATE 08/17	700
1321.19		

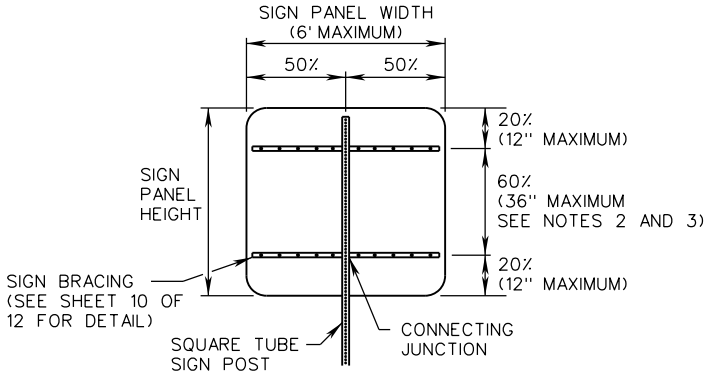

SINGLE POST - BRACING DIAGRAM
TYPICAL - TWO BRACE

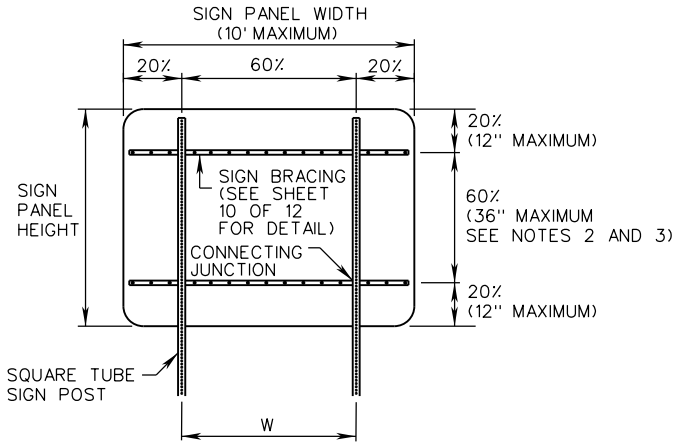

TWO POST - BRACING DIAGRAM
TYPICAL - TWO BRACE

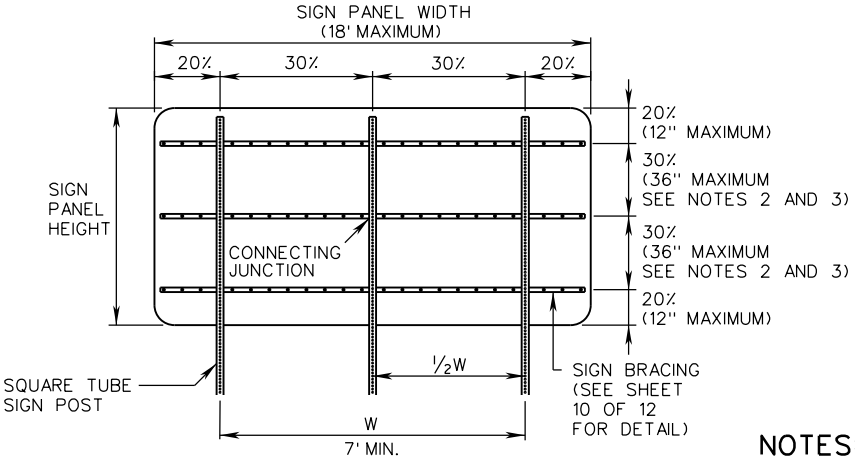

THREE POST - BRACING DIAGRAM
TYPICAL - THREE BRACE

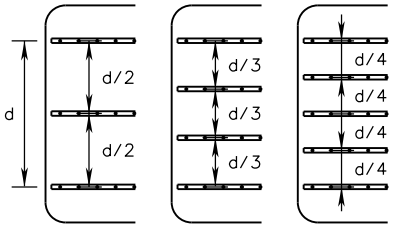

DETAIL A - SPACING OF MULTIPLE BRACING

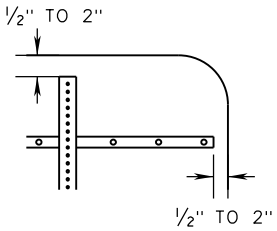

DETAIL B - INSTALLATION TOLERANCES

NOTES:

1. SIGN PANEL WIDTHS 36" OR GREATER SHALL REQUIRE SIGN BRACING.
2. VERTICAL SPACING OF SIGN BRACING SHALL NOT EXCEED 12" FROM THE TOP OR BOTTOM EDGE OF SIGN PANEL TO FIRST BRACE AND 36" BETWEEN BRACES. IF THE SPACING BETWEEN BRACES EXCEEDS 36" THEN ADDITIONAL SIGN BRACING SHALL BE ADDED. ALL SIGN BRACING SHALL BE EQUALLY SPACED BETWEEN THE TOP AND BOTTOM BRACE. SEE DETAIL A.
3. MAXIMUM SIGN PANEL AREA PER POST TO BRACE JUNCTION SHALL BE 10 SQ. FT. ADDITIONAL SIGN BRACING SHALL BE INSTALLED IF 10 SQ. FT PER POST TO BRACE JUNCTION IS EXCEEDED.
4. ONE SPLICE PER BRACE WILL BE PERMITTED. BRACE SPLICE SHALL BE IN ACCORDANCE WITH THE MANUFACTURER'S RECOMMENDATIONS. BRACING SHALL NOT BE SPLICED WITHIN 6" OF A BRACE TO POST JUNCTION. SPLICES SHALL NOT BE IN VERTICAL ALIGNMENT BUT SHALL BE OFFSET NO LESS THAN 12" FROM EACH OTHER.
5. TOP OF SIGN PANEL SHALL BE MOUNTED ½" TO 2" WITH THE TOP OF THE POST AND ½" TO 2" WITH THE SIDE OF THE SIGN BRACING. SEE DETAIL B.
6. SIGN PANEL WIDTHS SHALL NOT EXCEED MAXIMUM SPECIFIED.

SPECIFICATION REFERENCE	A COPY OF THE ORIGINAL SEALED AND SIGNED DRAWING IS ON FILE IN THE CENTRAL OFFICE.	VDOT ROAD AND BRIDGE STANDARDS	
700	SQUARE TUBE SIGN POST SIGN BRACING DETAILS VIRGINIA DEPARTMENT OF TRANSPORTATION	REVISION DATE 08/17	SHEET 11 OF 12 1321.20

STP-1

SIGN POSTS NOT REQUIRING BRACING

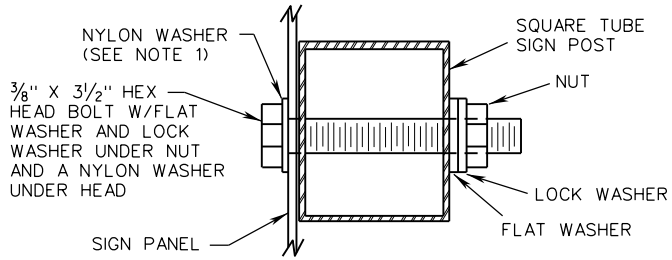

SINGLE SIGN PANEL DETAIL

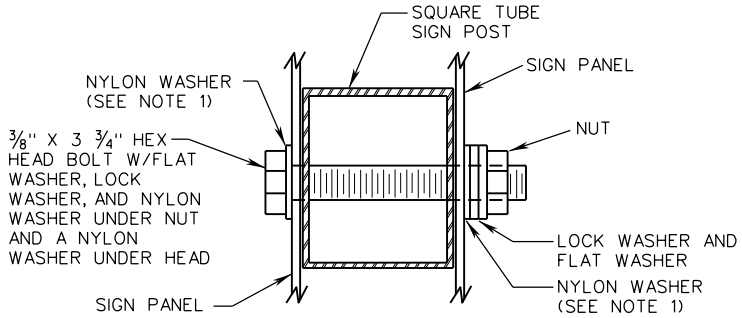

BACK-TO-BACK SIGN PANEL DETAIL

NOTES:

1. NYLON WASHER SHALL BE 1/16" THICK MINIMUM WITH AN OUTSIDE DIAMETER OF 1" AND AN INSIDE DIAMETER OF 7/16".
2. DRIVE RIVET SHALL BE 3/16" OR 3/8" ALUMINUM FLAT HEAD RIVET WITH STEEL PINS AND NYLON OR RUBBER WASHER.
3. THE HEADS OF ALL DRIVE RIVETS AND HEX HEAD BOLTS SHALL BE POWDER COATED TO MATCH THE COLOR OF THE SIGN SHEETING.
4. DRIVE RIVET SHALL NOT BE USED FOR SIGNS WITHOUT BRACING.

SIGN POSTS REQUIRING BRACING

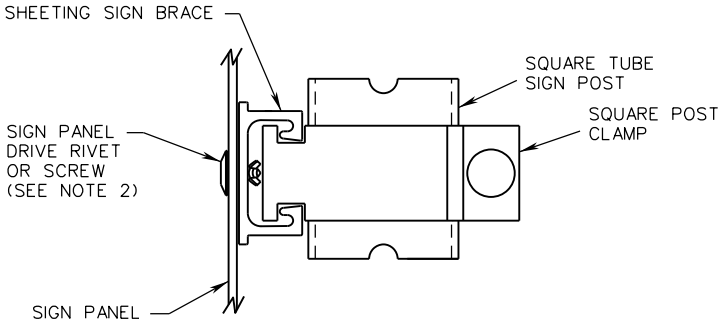

SINGLE SIGN PANEL DETAIL

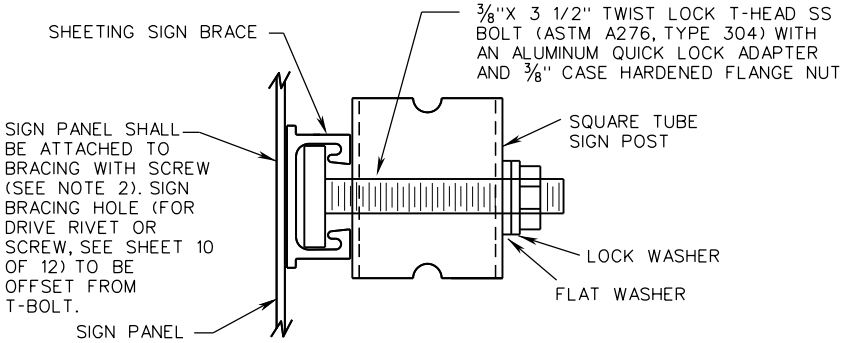

SINGLE SIGN PANEL ALTERNATE METHOD DETAIL

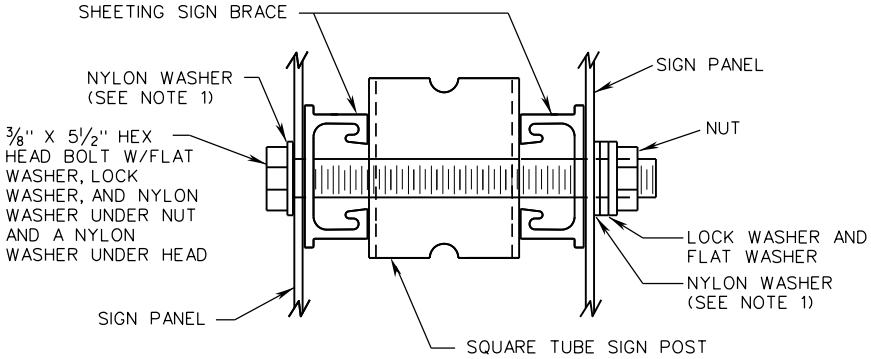

BACK-TO-BACK SIGN PANEL DETAIL

VDOT
ROAD AND BRIDGE STANDARDS

SHEET 12 OF 12
1321.21

REVISION DATE
08/17

A COPY OF THE ORIGINAL SEALED AND SIGNED DRAWING IS ON FILE IN THE CENTRAL OFFICE.

SQUARE TUBE SIGN POST

SIGN PANEL ATTACHMENT DETAILS

VIRGINIA DEPARTMENT OF TRANSPORTATION

SPECIFICATION REFERENCE
700

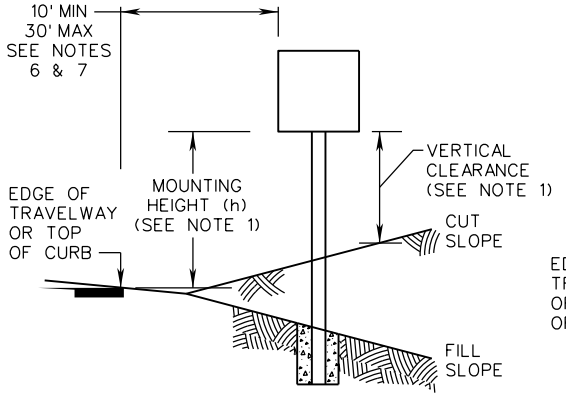

SINGLE POST
INSTALLATIONS

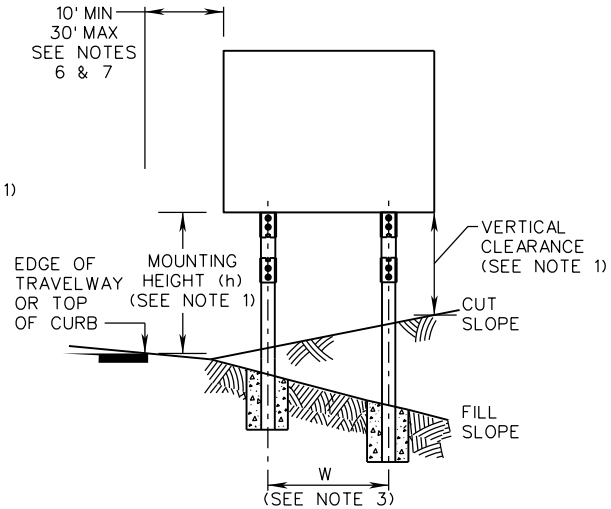

TWO POST
INSTALLATIONS
(SEE NOTE 10)

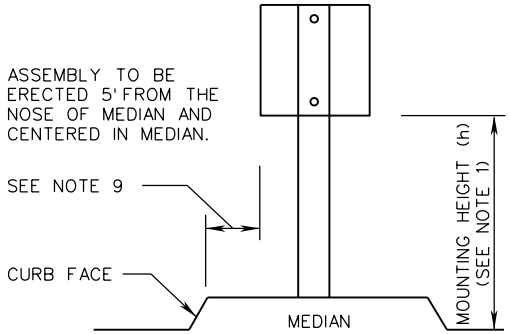

SINGLE POST
MEDIAN INSTALLATIONS

MINIMUM MOUNTING HEIGHT (h) (SEE NOTE 1)			
SIGN TYPES	FREEWAYS, EXPRESSWAYS, AND FULL CONTROL ACCESS HIGHWAYS	OTHER HIGHWAYS	
		RURAL AREAS	NON-RURAL AREAS
PRIMARY	7'	5'	7'
SECONDARY SIGNS (SEE NOTE 2)	5'	4'	7'

NOTES:

1. FOR ALL SIGNS:
   A. MINIMUM MOUNTING HEIGHT (h) SHALL BE IN ACCORDANCE WITH THE "MINIMUM MOUNTING HEIGHT" TABLE ON THIS SHEET. MOUNTING HEIGHT IS MEASURED FROM THE ROADWAY ELEVATION AT THE EDGE OF THE TRAVEL WAY TO THE BOTTOM OF THE SIGN PANEL.
   B. MAXIMUM MOUNTING HEIGHT (h) FOR THE BOTTOM-MOST SIGN PANEL(S) SHALL BE 8 FEET, EXCEPT WHEN NECESSARY TO ACHIEVE MINIMUM VERTICAL CLEARANCE BENEATH SIGN PANEL AS PER NOTE 1C.
   C. MINIMUM VERTICAL CLEARANCE (DISTANCE BETWEEN BOTTOM OF SIGN PANEL AND FINISHED GRADE BENEATH THE PANEL) SHALL BE 7 FEET FOR ANY PORTION OF THE SIGN WITHIN THE CLEAR ZONE. THIS MINIMUM VERTICAL CLEARANCE MAY BE REDUCED TO 5 FEET FOR EITHER OF THE FOLLOWING CONDITIONS:
      - WHEN SIGNS OR PORTIONS OF SIGNS ARE LOCATED MORE THAN 10 FEET UP A CUT SLOPE GREATER THAN 3:1, OR
      - WHEN THE SIGN IS LOCATED AT LEAST THE MINIMUM DISTANCE BEHIND CURB, BARRIER, OR GUARDRAIL AS PER NOTES 6 AND 7.

2. A SECONDARY SIGN IS CONSIDERED TO BE A SIGN MOUNTED BELOW ANOTHER SIGN, EXCEPT A ROUTE MARKER WITH AN AUXILIARY PLATE IS CONSIDERED TO BE A SINGLE SIGN. A SECONDARY SIGN SHALL NOT BE MOUNTED LOWER THAN 7 FEET ABOVE A PEDESTRIAN SIDEWALK OR PATHWAY IF IT WILL PROJECT INTO THE PEDESTRIAN FACILITY.

3. W = (0.60) X (SIGN PANEL WIDTH)

4. FOUR INCH SQUARE TUBE SIGN POST SHALL REQUIRE AN FHWA APPROVED BREAKAWAY SUPPORT SYSTEM CONFORMING TO MASH TESTING REQUIREMENTS FOR STRUCTURAL SUPPORTS FOR HIGHWAY SIGNS, LUMINIARIES AND TRAFFIC SIGNALS.

5. FOR SIGNS LOCATED IN AREAS WHERE PEDESTRIAN MOVEMENTS ARE LIKELY TO OCCUR OR ON-STREET PARKING IS PERMITTED, THE HEIGHT FROM THE LOWEST PORTION OF THE SIGN PANEL TO THE FINISHED SURFACE SHALL HAVE A MINIMUM CLEARANCE OF 7 FEET.

6. THE LATERAL CLEARANCE TO THE SIGN PANEL SHALL BE A MINIMUM OF 2 FEET FROM THE FACE OF CURB OR 4 FEET FROM FACE OF BARRIER, IF PRESENT.

7. UNLESS OTHERWISE APPROVED BY THE ENGINEER, SIGNS PLACED BEHIND GUARDRAIL SHALL BE LOCATED SUCH THAT THE NEAR SIDE EDGE OF THE SIGN PANEL IS OUTSIDE OF THE GUARDRAIL DEFLECTION DISTANCE.

8. FOR SIGNS AT INTERCHANGE EXIT RAMPS, REFER TO STANDARD ISD-1.

9. 2' MINIMUM FOR MEDIANS OVER 10' IN WIDTH. 12" MINIMUM FOR MEDIANS 10' OR LESS IN WIDTH UNLESS SHOWN OTHERWISE IN THE CONTRACT DOCUMENTS.

10. THE SIGN SHALL NOT BE INSTALLED UNTIL THE POST AND HINGE ASSEMBLY HAVE BEEN INSTALLED.

SPECIFICATION REFERENCE	A COPY OF THE ORIGINAL SEALED AND SIGNED DRAWING IS ON FILE IN THE CENTRAL OFFICE.	VDOT ROAD AND BRIDGE STANDARDS	
700	FOUR INCH SQUARE TUBE SIGN POST MASH APPROVED DESIGN VIRGINIA DEPARTMENT OF TRANSPORTATION	REVISION DATE NEW 08/19	SHEET 1 OF 12 1321.40

STP-2

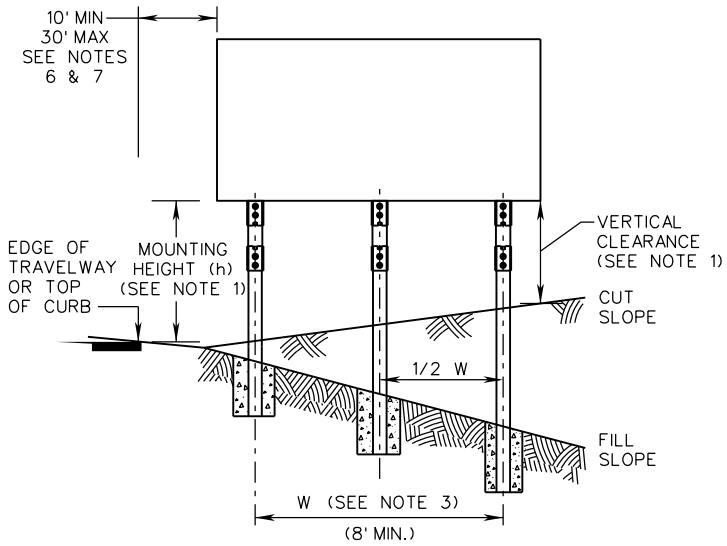

THREE POST INSTALLATIONS
(SEE NOTE 10)

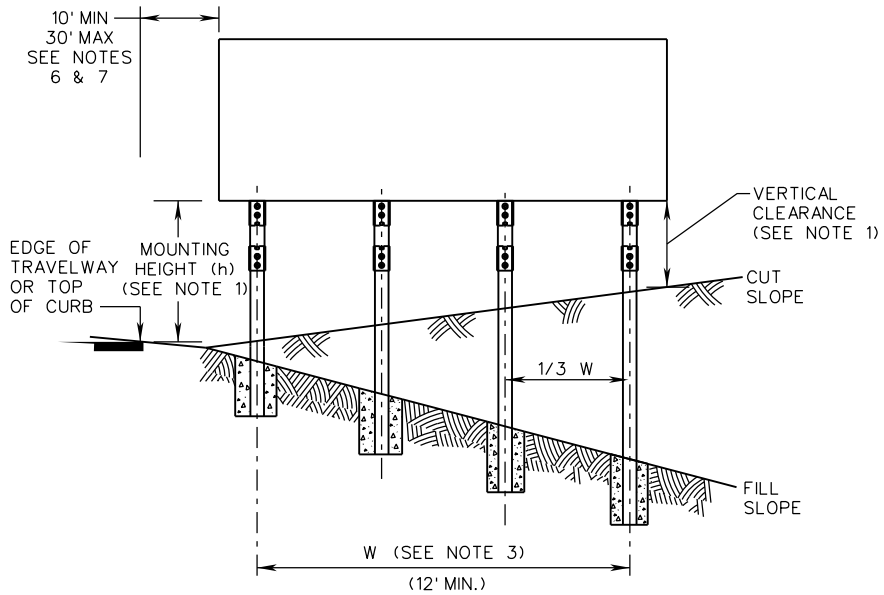

FOUR POST INSTALLATIONS
(SEE NOTE 10)

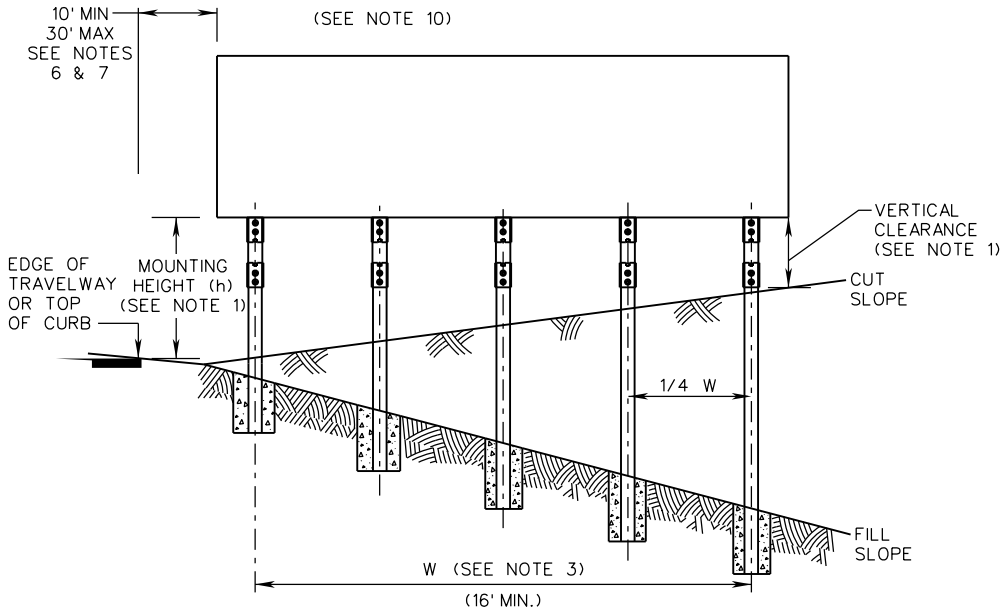

FIVE POST INSTALLATIONS
(SEE NOTE 10)

NOTES:

1. SEE SHEET 1321.40 (SHEET 1 OF 2) FOR ALL NOTES AND DETAILS NOT SHOWN.

VDOT
ROAD AND BRIDGE STANDARDS

SHEET 2 OF 12
1321.41

REVISION DATE
NEW 08/19

A COPY OF THE ORIGINAL SEALED AND SIGNED DRAWING IS ON FILE IN THE CENTRAL OFFICE.

FOUR INCH SQUARE TUBE SIGN POST

MASH APPROVED DESIGN

VIRGINIA DEPARTMENT OF TRANSPORTATION

SPECIFICATION REFERENCE
700

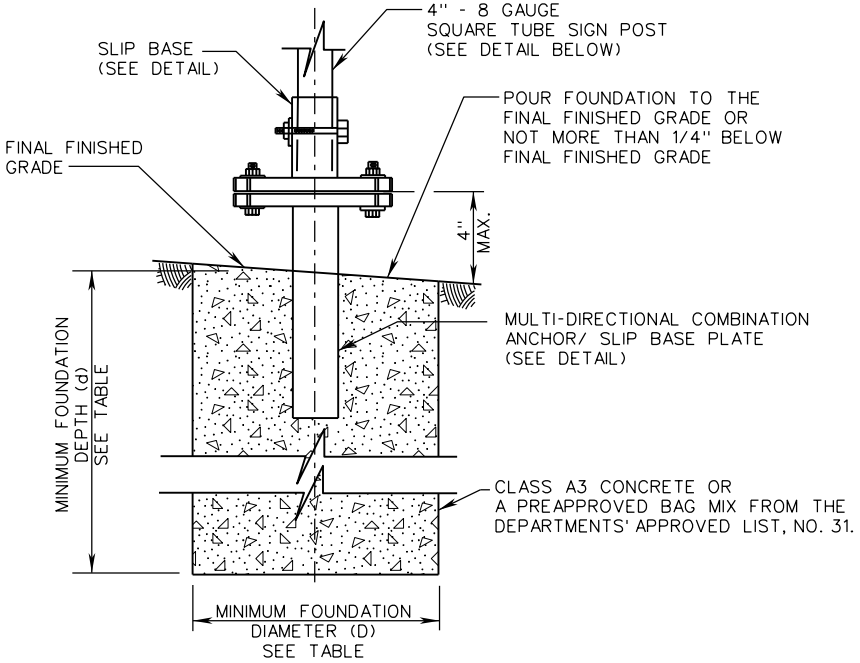

FOUNDATION

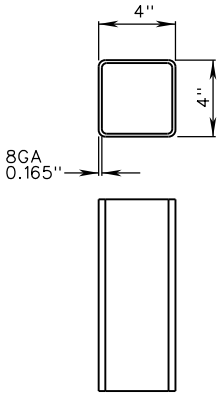

STEEL SHALL CONFORM TO ASTM A1011 GRADE 50 AND MUST BE WELDED AND SCARFED OUTSIDE AFTER WELDING AND THEN ZINC FLO-COAT GALVANIZED ON BOTH THE INTERIOR AND EXTERIOR AFTER SCARFING. STEEL SHALL BE COATED WITH A CROMATE CONVERSION COATING & CLEAR ORGANIC POLYMER TOPCOAT.

SIGN POST

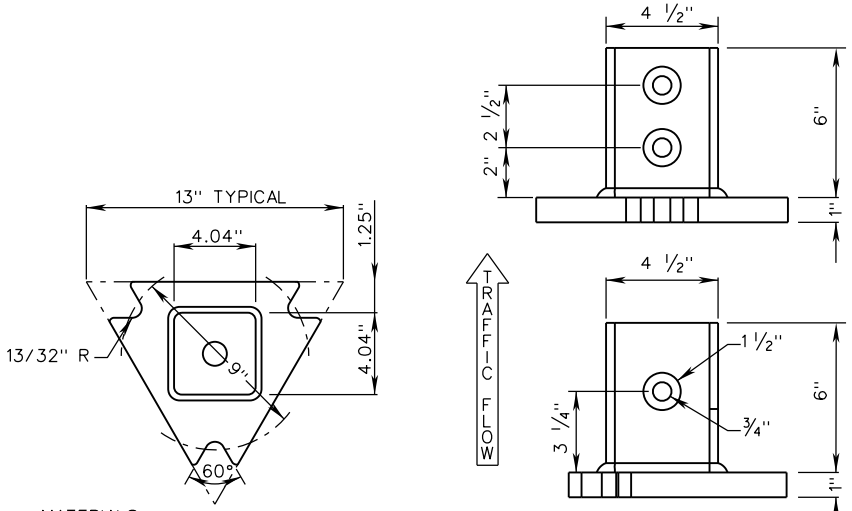

MATERIALS:
4 1/2" X 4 1/2" X 7 GAUGE ASTM A500 GRADE B TUBE
1" THICK ASTM A572 GRADE 50 PLATE STEEL
GALVANIZE PER ASTM A153
ALL WELDS TO BE 1/4" X 3/8" FILLET TYPE

MULTI-DIRECTIONAL COMBINATION SLIP BASE PLATE

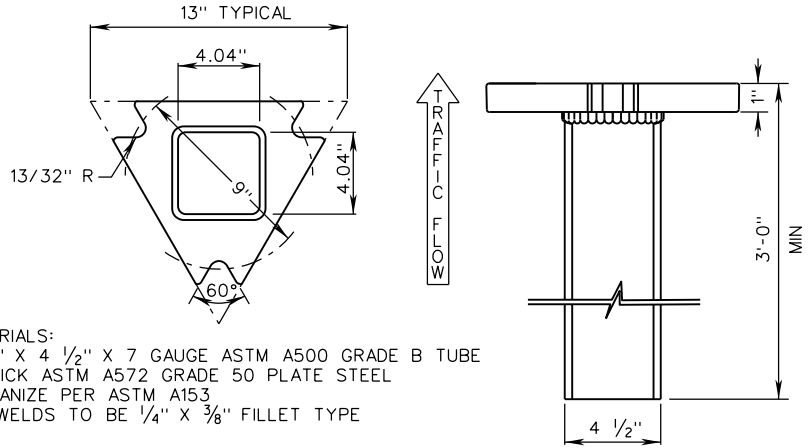

MATERIALS:
4 1/2" X 4 1/2" X 7 GAUGE ASTM A500 GRADE B TUBE
1" THICK ASTM A572 GRADE 50 PLATE STEEL
GALVANIZE PER ASTM A153
ALL WELDS TO BE 1/4" X 3/8" FILLET TYPE

MULTI-DIRECTIONAL COMBINATION ANCHOR BASE PLATE

SPECIFICATION REFERENCE	A COPY OF THE ORIGINAL SEALED AND SIGNED DRAWING IS ON FILE IN THE CENTRAL OFFICE.	VDOT ROAD AND BRIDGE STANDARDS	
700	FOUR INCH SQUARE TUBE SIGN POST POST AND FOUNDATION DETAILS VIRGINIA DEPARTMENT OF TRANSPORTATION	REVISION DATE NEW 08/19	SHEET 3 OF 12 1321.42

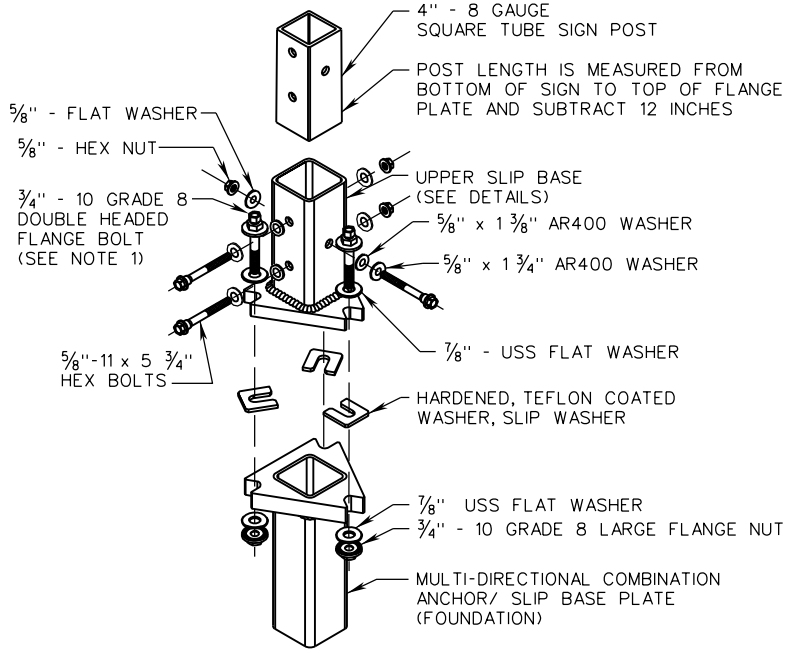

SLIP BASE BREAKAWAY DETAIL

NOTES:

1. INSTALL PER MANUFACTURERS INSTRUCTIONS.
2. POST BOLTS SHALL BE TORQUED TO 100 FT-LBS.

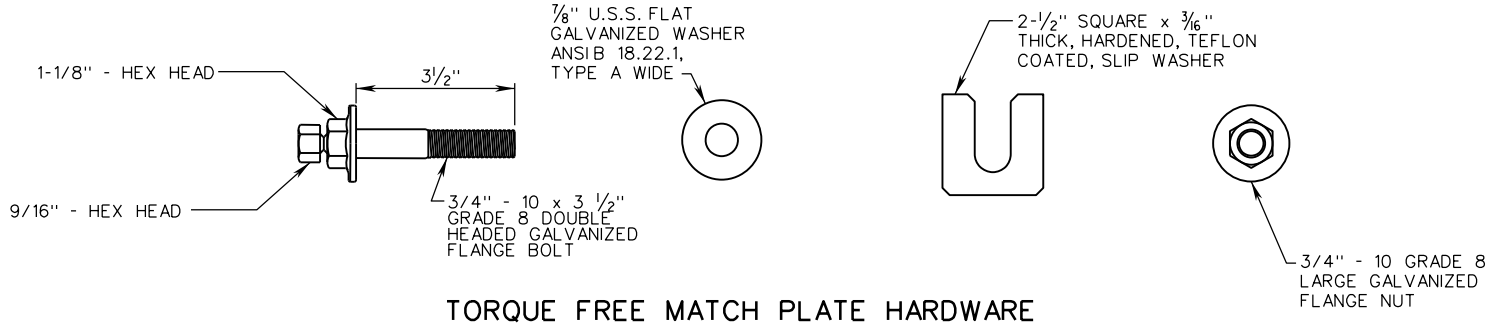

TORQUE FREE MATCH PLATE HARDWARE

VDOT ROAD AND BRIDGE STANDARDS	A COPY OF THE ORIGINAL SEALED AND SIGNED DRAWING IS ON FILE IN THE CENTRAL OFFICE. FOUR INCH SQUARE TUBE SIGN POST SLIP BASE DETAILS VIRGINIA DEPARTMENT OF TRANSPORTATION		SPECIFICATION REFERENCE
SHEET 4 OF 12		REVISION DATE	700
1321.43		NEW 08/19	

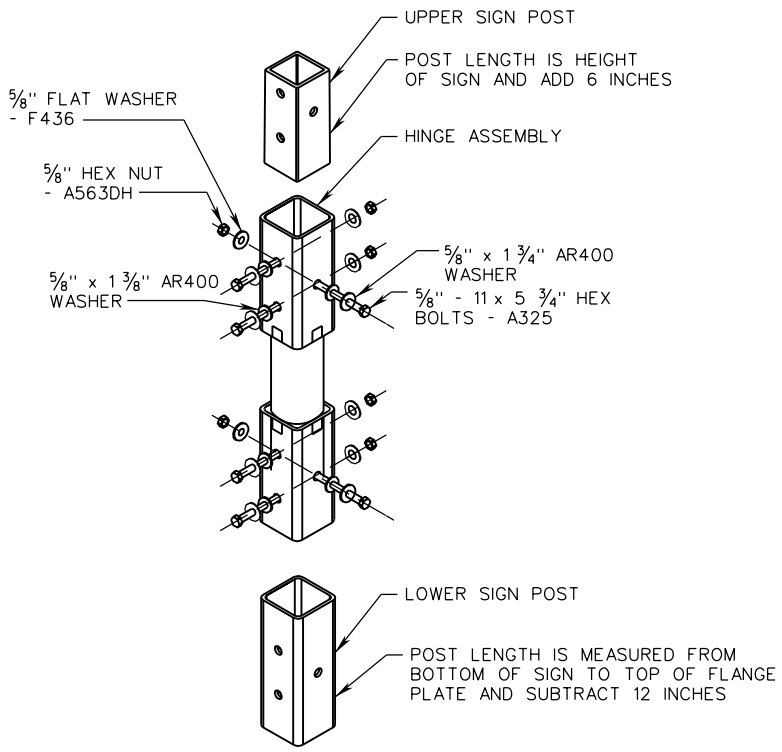

HINGE INSTALLATION DETAIL

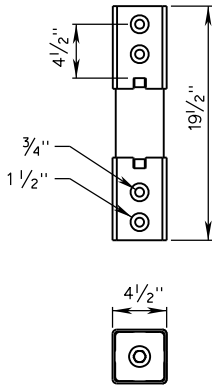

HINGE ASSEMBLY

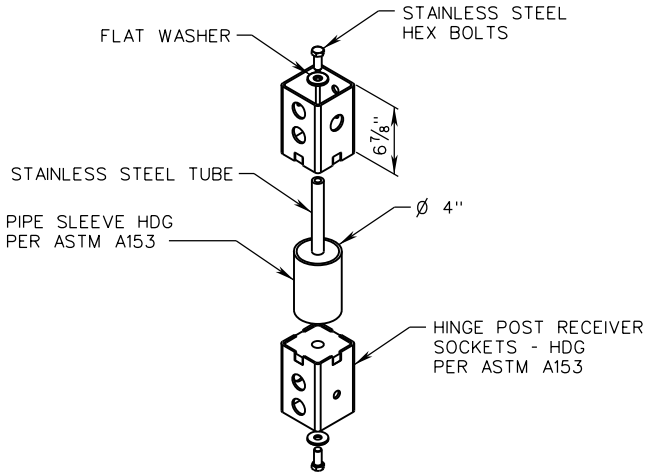

HINGE ASSEMBLY DETAIL

NOTES:

1. HINGE ASSEMBLY SHALL BE USED FOR MULTI-POST INSTALLATIONS ONLY.
2. HINGE ASSEMBLY BOLTS SHALL BE TORQUED TO 100 FT-LBS.
3. INSTALL PER MANUFACTURER'S INSTRUCTIONS.

SPECIFICATION REFERENCE	A COPY OF THE ORIGINAL SEALED AND SIGNED DRAWING IS ON FILE IN THE CENTRAL OFFICE.	VDOT ROAD AND BRIDGE STANDARDS	
700	FOUR INCH SQUARE TUBE SIGN POST HINGE ASSEMBLY DETAILS VIRGINIA DEPARTMENT OF TRANSPORTATION	REVISION DATE NEW 08/19	SHEET 5 OF 12 1321.44

STP-2

TABLE 1 - FOUNDATION AND MAXIMUM SIGN SIZES FOR HAMPTON ROADS DISTRICT

1 POST								
MAX CENTROID (FT)	SIGN AREA							
	20 SF	25 SF	30 SF	35 SF	40 SF	45 SF	50 SF	55 SF
10	2'-0"x7'-0"	2'-0"x7'-6"	2'-0"x7'-6"	2'-0"x8'-0"	2'-6"x9'-0"	2'-6"x9'-0"	2'-6"x9'-6"	2'-6"x9'-6"
11			2'-0"x8'-0"	2'-6"x8'-6"				SEE 2 POST TABLE
12				2'-6"x8'-6"				
13		2'-0"x8'-0"	2'-6"x8'-6"		2'-6"x9'-6"	2'-6"x9'-6"		
14	2'-0"x7'-6"							
15								
16								
17		2'-0"x8'-6"						
18								

2 POST								
MAX CENTROID (FT)	SIGN AREA							
	35 SF	40 SF	45 SF	50 SF	55 SF	60 SF	65 SF	70 SF
10	SEE 1 POST TABLE					2'-0"x7'-6"	2'-0"x8'-0"	2'-0"x8'-0"
11					2'-0"x8'-0"	2'-0"x8'-0"	2'-0"x8'-6"	2'-6"x8'-0"
12								
13				2'-0"x8'-0"	2'-6"x8'-0"	2'-6"x8'-0"	2'-6"x8'-6"	2'-6"x8'-6"
14			2'-0"x8'-0"					
15								
16		2'-0"x7'-6"				SEE 3 POST TABLE		
17	2'-0"x7'-6"		2'-0"x8'-6"	2'-0"x8'-6"	2'-6"x8'-6"			
18								

3 POST						
MAX CENTROID (FT)	SIGN AREA					
	60 SF	65 SF	70 SF	80 SF	90 SF	100 SF
10	SEE 2 POST TABLE			2'-0"x7'-6"	2'-0"x7'-6"	2'-0"x8'-0"
11				2'-0"x8'-0"	2'-0"x8'-0"	2'-0"x8'-6"
12						
13				2'-6"x8'-0"	2'-6"x8'-0"	2'-6"x8'-6"
14						
15						
16	2'-0"x7'-6"	2'-0"x8'-6"	2'-0"x8'-6"			
17				2'-6"x8'-6"	2'-6"x8'-6"	SEE 4 POST TABLE
18						

4 POST				
MAX CENTROID (FT)	SIGN AREA			
	100 SF	120 SF	125 SF	130 SF
10	SEE 3 POST TABLE	2'-0"x7'-6"	2'-0"x8'-0"	2'-0"x8'-0"
11		2'-0"x8'-0"	2'-0"x8'-6"	2'-0"x8'-6"
12				
13		2'-6"x8'-0"	2'-6"x8'-6"	2'-6"x8'-6"
14				
15				
16				
17	2'-0"x8'-6"	2'-6"x8'-6"	2'-6"x9'-0"	SEE 5 POST TABLE
18				

5 POST						
MAX CENTROID (FT)	SIGN AREA					
	125 SF	130 SF	140 SF	150 SF	160 SF	170 SF
10	SEE 4 POST TABLE		2'-0"x7'-6"	2'-0"x7'-6"	2'-0"x8'-0"	2'-0"x8'-0"
11			2'-0"x8'-0"	2'-0"x8'-0"	2'-0"x8'-6"	2'-0"x8'-6"
12						
13			2'-6"x8'-0"	2'-6"x8'-0"	2'-6"x8'-6"	2'-6"x8'-6"
14						
15						
16						
17		2'-6"x8'-6"	2'-6"x8'-6"	2'-6"x8'-6"	2'-6"x9'-0"	2'-6"x9'-0"
18	2'-0"x8'-6"					

NOTES:

1. CENTROID SHALL BE DETERMINED IN ACCORDANCE WITH PCS-1.
2. FOLLOW SIGN BRACING DETAILS (SEE SHEETS 10 & 11 OF 12) FOR MAXIMUM SIGN PANEL WIDTHS AND SIGN BRACING SPACING.
3. TABLE 1 SHALL BE USED FOR THE HAMPTON ROADS DISTRICT, EXCEPT THE CITY OF EMPORIA AND COUNTIES OF GREENSVILLE, SUSSEX, AND SOUTHAMPTON SHALL USE TABLE 2.
4. FOR FOUNDATION TYPES AND REINFORCEMENT SEE SHEET 8 OF 12.
5. FOUNDATION SIZES BASED ON TYPICAL SOILS AND L-PILE 2016 ANALYSIS.
6. SEE SHEETS 1 & 2 OF 12 FOR POST SPACING REQUIREMENTS.
7. DO NOT EXCEED MAX CENTROID HEIGHT OR CORRESPONDING SIGN AREA.

A COPY OF THE ORIGINAL SEALED AND SIGNED DRAWING IS ON FILE IN THE CENTRAL OFFICE.

FOUR INCH SQUARE TUBE SIGN POST

FOUNDATION SIZES

VIRGINIA DEPARTMENT OF TRANSPORTATION

SPECIFICATION REFERENCE

700

TABLE 2 - FOUNDATION AND MAXIMUM SIGN SIZES FOR BRISTOL, SALEM, LYNCHBURG, RICHMOND, FREDERICKSBURG, CULPEPER, STAUTON, AND NORTHERN VIRGINIA DISTRICTS

1 POST							
MAX CENTROID (FT)	SIGN AREA						
	35 SF	40 SF	45 SF	50 SF	60 SF	65 SF	70 SF
10	2'-0"x6'-0"	2'-6"x5'-6"	2'-6"x5'-6"	2'-6"x6'-6"	2'-6"x7'-0"	2'-6"x7'-0"	3'-0"x6'-0"
11	2'-0"x6'-0"	2'-6"x6'-6"	2'-6"x6'-6"				
12							
13							
14	2'-6"x6'-0"						
15							3'-0"x6'-6"
16				2'-6"x7'-0"		SEE 2 POST TABLE	
17	2'-6"x6'-6"						
18	2'-6"x7'-0"	2'-6"x7'-0"	2'-6"x7'-0"				

2 POST				
MAX CENTROID (FT)	SIGN AREA			
	65 SF	70 SF	80 SF	85 SF
10	SEE 1 POST TABLE		2'-6"x5'-6"	2'-6"x5'-6"
11			2'-6"x6'-6"	2'-6"x6'-6"
12				
13				
14				
15				
16	2'-6"x6'-0"	2'-6"x6'-0"		
17	2'-6"x6'-6"	2'-6"x6'-6"		
18	2'-6"x7'-0"	2'-6"x7'-0"	2'-6"x7'-0"	2'-6"x7'-0"

3 POST						
MAX CENTROID (FT)	SIGN AREA					
	90 SF	100 SF	110 SF	120 SF	130 SF	140 SF
10	2'-0"x6'-0"	2'-0"x6'-0"	2'-6"x5'-6"	2'-6"x5'-6"	2'-6"x5'-6"	2'-6"x6'-6"
11			2'-6"x6'-0"	2'-6"x6'-6"	2'-6"x6'-6"	
12						
13						
14	2'-6"x5'-6"	2'-6"x6'-0"				
15						
16						2'-6"x7'-0"
17	2'-6"x6'-6"	2'-6"x6'-6"	2'-6"x6'-6"			
18	3'-0"x6'-0"	2'-6"x7'-0"	2'-6"x7'-0"	2'-6"x7'-0"	2'-6"x7'-0"	

4 POST					
MAX CENTROID (FT)	SIGN AREA				
	150 SF	160 SF	170 SF	175 SF	185 SF
10	2'-6"x5'-6"	2'-6"x5'-6"	2'-6"x5'-6"	2'-6"x5'-6"	2'-6"x6'-6"
11	2'-6"x6'-6"	2'-6"x6'-6"	2'-6"x6'-6"	2'-6"x6'-6"	
12					
13					
14					
15					
16					2'-6"x7'-0"
17					
18	2'-6"x7'-0"	2'-6"x7'-0"	2'-6"x7'-0"	2'-6"x7'-0"	

5 POST			
MAX CENTROID (FT)	SIGN AREA		
	190 SF	195 SF	200 SF
10	2'-6"x5'-6"	2'-6"x5'-6"	2'-6"x5'-6"
11	2'-6"x6'-6"	2'-6"x6'-6"	2'-6"x6'-6"
12			
13			
14			
15			
16			
17			
18	2'-6"x7'-0"	2'-6"x7'-0"	2'-6"x7'-0"

NOTES:

1. CENTROID SHALL BE DETERMINED IN ACCORDANCE WITH PCS-1.
2. FOLLOW SIGN BRACING DETAILS (SEE SHEETS 10 & 11 OF 12) FOR MAXIMUM SIGN PANEL WIDTHS AND SIGN BRACING SPACING.
3. TABLE 2 SHALL ALSO BE USED FOR THE CITY OF EMPORIA AND COUNTIES OF GREENSVILLE, SUSSEX, AND SOUTHAMPTON IN HAMPTON ROADS DISTRICT.
4. FOR FOUNDATION TYPES AND REINFORCEMENT SEE SHEET 8 OF 12.
5. FOUNDATION SIZES BASED ON TYPICAL SOILS AND L-PILE 2016 ANALYSIS.
6. SEE SHEET 1 & 2 OF 12 FOR POST SPACING REQUIREMENTS.
7. DO NOT EXCEED MAX CENTROID HEIGHT OR CORRESPONDING SIGN AREA.

FOUNDATION TYPES

STP-2 FOUNDATION TYPE			OPTION A						OPTION B	
			BAR P			BAR H			WELDED WIRE MESH	
	DIA. (D)	DEPTH (d)	LENGTH	BAR SIZE	NO.	BAR SIZE	NO.	LENGTH	LENGTH	SQ. FT.
A	2'-0"	6'-0"	5'-6"	#5	8	#4	7	6'-0"	5'-6"	33
B	2'-0"	7'-0"	6'-6"	#6	8	#4	8	6'-0"	6'-6"	40
C	2'-0"	7'-6"	7'-0"	#7	8	#4	8	6'-0"	7'-0"	42
D	2'-0"	8'-0"	7'-6"	#7	8	#4	9	6'-0"	7'-6"	45
E	2'-0"	8'-6"	8'-0"	#7	8	#4	10	6'-0"	8'-0"	48
F	2'-6"	5'-6"	5'-0"	#5	8	#4	6	7'-7"	5-0"	37
G	2'-6"	6'-0"	5'-6"	#5	8	#4	7	7-7"	5'-6"	40
H	2'-6"	6'-6"	6'-0"	#6	8	#4	7	7'-7"	6'-0"	44
I	2'-6"	7'-0"	6'-6"	#6	8	#4	8	7'-7"	6'-6"	47
J	2'-6"	8'-0"	7'-6"	#6	8	#4	9	7'-7"	7'-6"	57
K	2'-6"	8'-6"	8'-0"	#7	8	#4	10	7'-7"	8'-0"	61
L	2'-6"	9'-0"	8'-6"	#7	8	#4	10	7'-7"	8'-6"	65
M	2'-6"	9'-6"	9'-0"	#7	8	#4	10	7'-7"	9'-0"	68
N	3'-0"	6'-0"	5'-6"	#5	8	#4	8	9'-0"	5'-6"	50
O	3'-0"	6'-6"	6'-0"	#6	8	#4	7	9'-0"	6'-0"	54

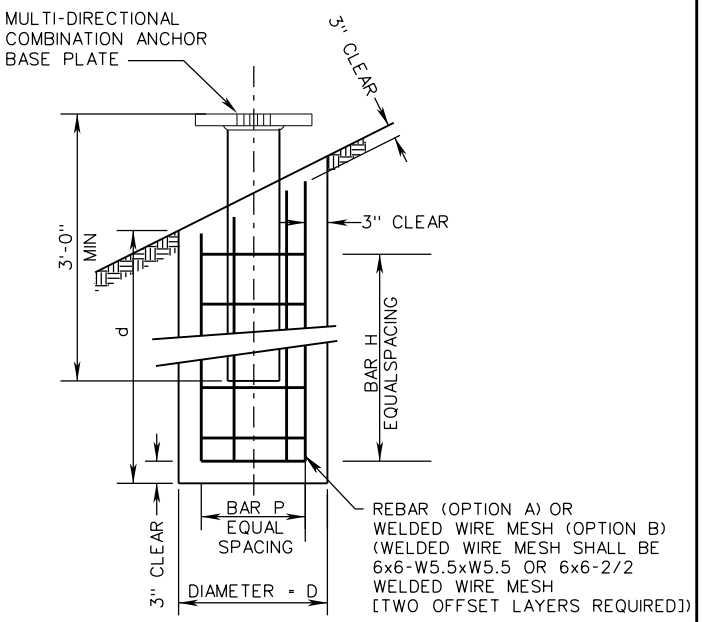

ELEVATION

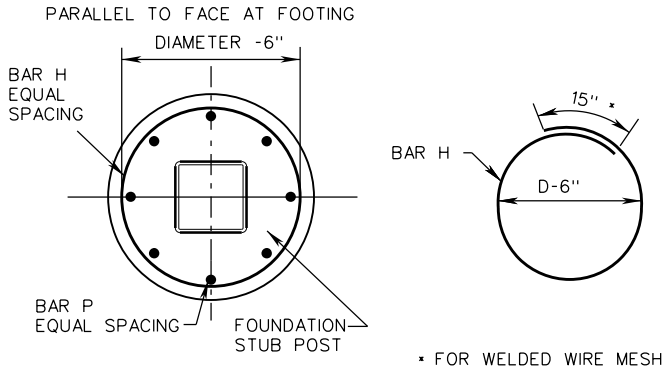

* FOR WELDED WIRE MESH
LAP SHALL BE 9"

PLAN

NOTES:

1. FOR FOUNDATION SIZES SEE TABLE 1 (SHEET 6 OF 12) AND TABLE 2 (SHEET 7 OF 12).

A COPY OF THE ORIGINAL SEALED AND SIGNED DRAWING IS ON FILE IN THE CENTRAL OFFICE.

FOUR INCH SQUARE TUBE SIGN POST

FOUNDATION TYPES AND REINFORCEMENT

VIRGINIA DEPARTMENT OF TRANSPORTATION

SPECIFICATION REFERENCE
700

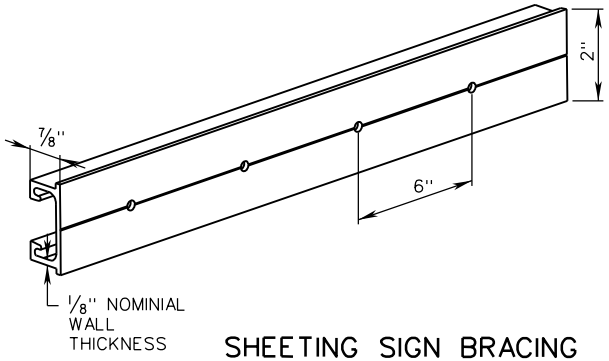

ALUMINUM SIGN BRACING 2" MOUNTING SURFACE x 7/8" DEPTH x 1/8" NOMINAL WALL THICKNESS

6061-T6 ALUMINUM ALLOY, PUNCHED WITH 3/16" DIAMETER HOLES ON 6" CENTERS FOR ATTACHMENT OF SIGN SUBSTRATE USING SIGN PANEL 3/16" DRIVE RIVETS, OR 3/8" DIAMETER HOLES ON 12" CENTERS WHEN USING 3/8" DRIVE RIVETS.

SHEETING SIGN BRACING

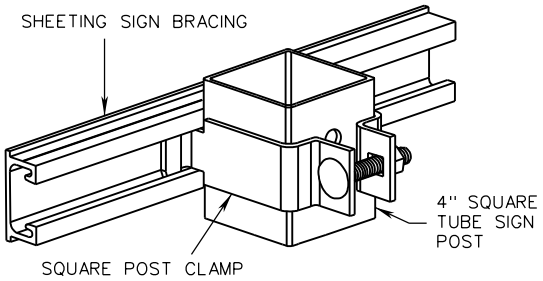

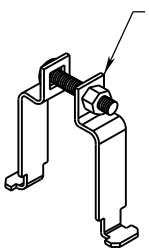

11 GAUGE, TYPE 304, #2B FINISHED STAINLESS STEEL WITH STAINLESS STEEL CARRIAGE BOLT

CLAMPS CAN BE TWIST LOCKED INTO PLACE WITHOUT SLIDING THE CLAMPS FROM AN OPEN END OF THE CHANNEL BRACE

CLAMP IS TO BE SIZED TO FIT THE 4" SQUARE TUBE POST

SQUARE POST CLAMP DETAIL (METHOD A)

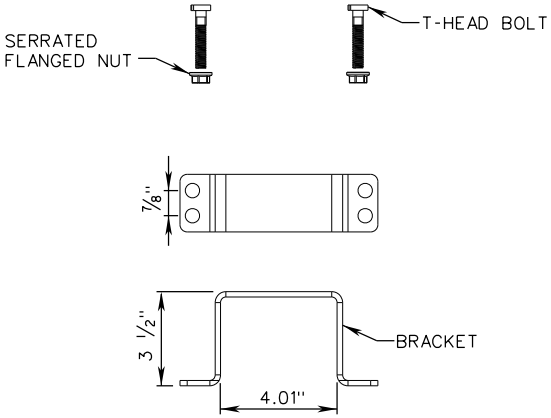

MATERIALS:

2" WIDE x 3/16" BRACKET. TYPE 304, #2B FINISHED STAINLESS STEEL BRACKET.

STAINLESS STEEL 3/4" - 16 x 2" T-HEAD BOLTS AND SERRATED FLANGE NUTS

ONE CLAMP REQUIRED FOR EACH BRACE TO POST JUNCTION.

SQUARE POST CLAMP DETAIL (METHOD B)

NOTES:

1. SEE SHEET 12 OF 12 FOR SIGN PANEL ATTACHMENT DETAILS.
2. ONE CLAMP REQUIRED FOR EACH BRACE-TO-POST JUNCTION.
3. STANDARD SPD-2 SIGNS WILL BE PERMITTED FOR STP-2 STRUCTURES.

SPECIFICATION REFERENCE	A COPY OF THE ORIGINAL SEALED AND SIGNED DRAWING IS ON FILE IN THE CENTRAL OFFICE.	VDOT ROAD AND BRIDGE STANDARDS	
700	FOUR INCH SQUARE TUBE SIGN POST SIGN BRACING DETAILS VIRGINIA DEPARTMENT OF TRANSPORTATION	REVISION DATE NEW 08/19	SHEET 9 OF 12 1321.48

STP-2

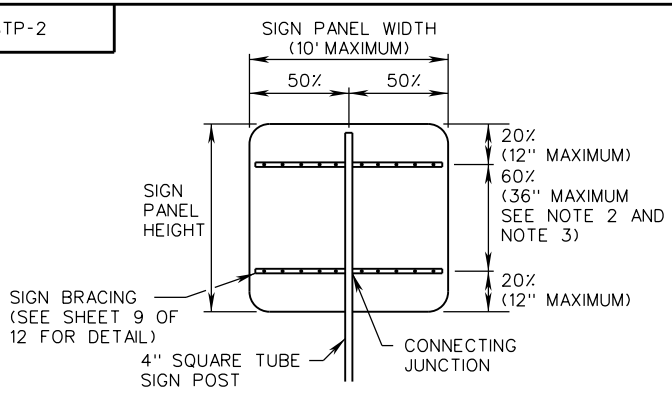

SINGLE POST - BRACING DIAGRAM
TYPICAL - TWO BRACE

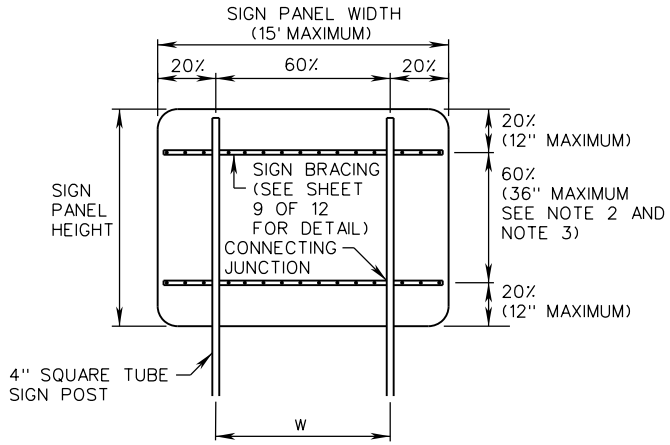

TWO POST - BRACING DIAGRAM
TYPICAL - TWO BRACE

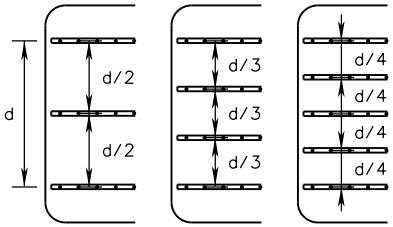

DETAIL A - SPACING OF MULTIPLE BRACING

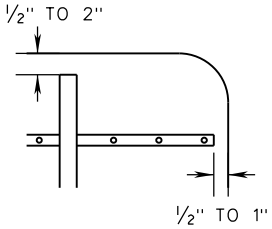

DETAIL B - INSTALLATION TOLERANCES

NOTES:

1. SIGN PANEL WIDTHS 36" OR GREATER SHALL REQUIRE SIGN BRACING.
2. VERTICAL SPACING OF SIGN BRACING SHALL NOT EXCEED 12" FROM THE TOP OR BOTTOM EDGE OF SIGN PANEL TO FIRST BRACE AND 36" BETWEEN BRACES. IF THE SPACING BETWEEN BRACES EXCEEDS 36" THEN ADDITIONAL SIGN BRACING SHALL BE ADDED. ALL SIGN BRACING SHALL BE EQUALLY SPACED BETWEEN THE TOP AND BOTTOM BRACE. SEE DETAIL A.
3. MAXIMUM SIGN PANEL AREA PER POST TO BRACE JUNCTION SHALL BE 10 SQ. FT. ADDITIONAL SIGN BRACING SHALL BE INSTALLED IF 10 SQ. FT PER POST TO BRACE JUNCTION IS EXCEEDED.
4. ONE SPLICE PER BRACE WILL BE PERMITTED. BRACE SPLICE SHALL BE IN ACCORDANCE WITH THE MANUFACTURER'S RECOMMENDATIONS. BRACING SHALL NOT BE SPLICED WITHIN 6" OF A BRACE TO POST JUNCTION. SPLICES SHALL NOT BE IN VERTICAL ALIGNMENT BUT SHALL BE OFFSET NO LESS THAN 12" FROM EACH OTHER.
5. TOP OF SIGN PANEL SHALL BE MOUNTED ½" TO 2" WITH THE TOP OF THE POST AND ½" TO 1" WITH THE SIDE OF THE SIGN BRACING. SEE DETAIL B.
6. POST LENGTHS FOR MULTI-POST SIGNS SHALL BE SIGN PANEL HEIGHT PLUS 6".

A COPY OF THE ORIGINAL SEALED AND SIGNED DRAWING IS ON FILE IN THE CENTRAL OFFICE.

FOUR INCH SQUARE TUBE SIGN POST

SIGN BRACING AND SIGN PANEL ATTACHMENT DETAILS

VIRGINIA DEPARTMENT OF TRANSPORTATION

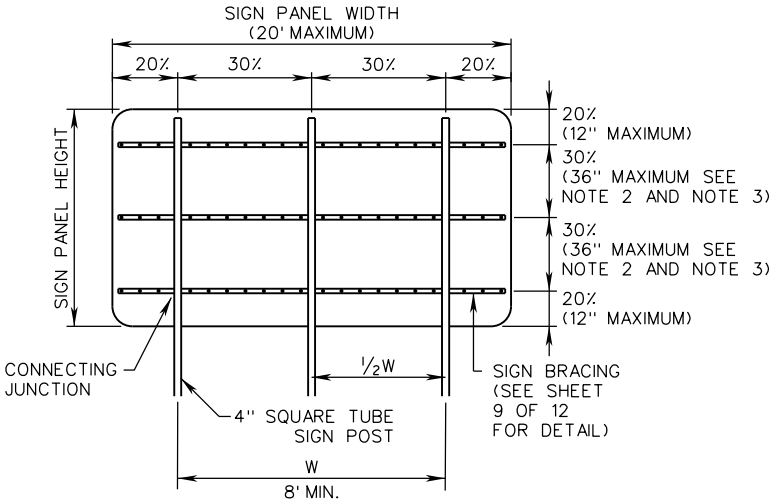

THREE POST - BRACING DIAGRAM
TYPICAL - THREE BRACE

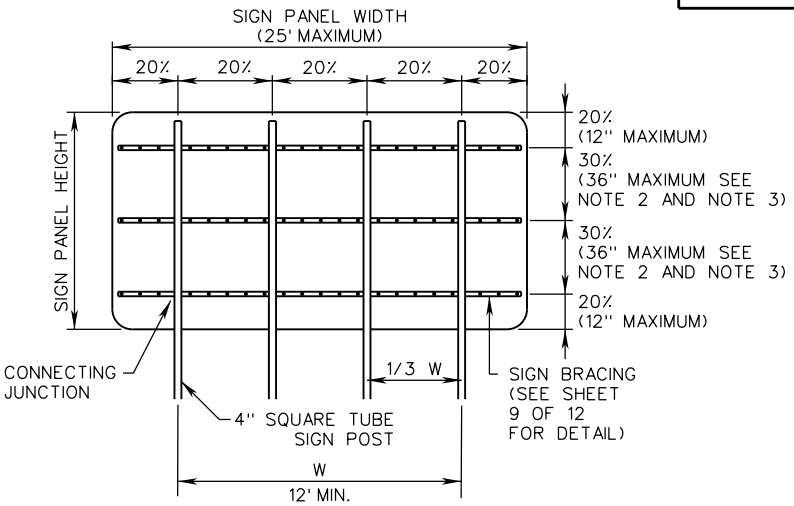

FOUR POST - BRACING DIAGRAM
TYPICAL - THREE BRACE

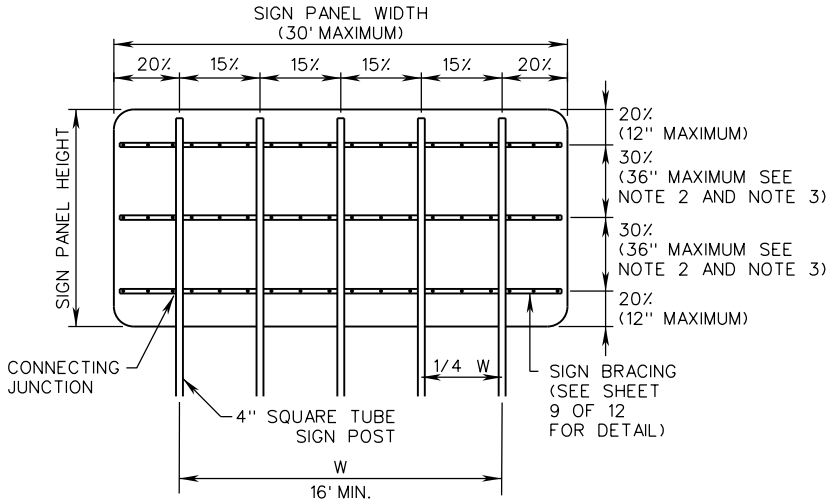

FIVE POST - BRACING DIAGRAM
TYPICAL - THREE BRACE

NOTES:

SEE SHEET 1321.49 FOR ALL NOTES AND DETAILS NOT SHOWN.

SPECIFICATION REFERENCE	A COPY OF THE ORIGINAL SEALED AND SIGNED DRAWING IS ON FILE IN THE CENTRAL OFFICE.	VDOT ROAD AND BRIDGE STANDARDS	
700	FOUR INCH SQUARE TUBE SIGN POST SIGN BRACING AND SIGN PANEL ATTACHMENT DETAILS VIRGINIA DEPARTMENT OF TRANSPORTATION	REVISION DATE NEW 08/19	SHEET 11 OF 12 1321.50

STP-2

SIGN POSTS REQUIRING BRACING

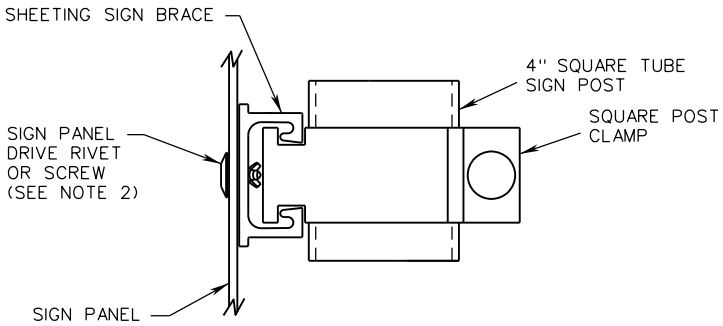

SINGLE SIGN PANEL DETAIL

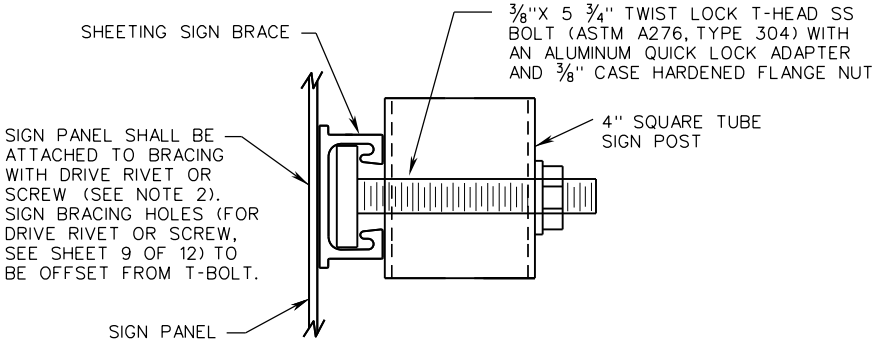

SINGLE SIGN PANEL ALTERNATE METHOD DETAIL

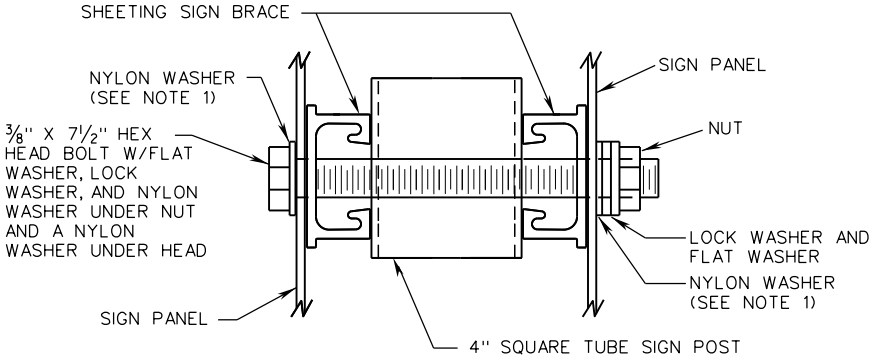

BACK-TO-BACK SIGN PANEL DETAIL

NOTES:

1. NYLON WASHER SHALL BE 1/16" THICK MINIMUM WITH AN OUTSIDE DIAMETER OF 1" AND AN INSIDE DIAMETER OF 7/16".
2. DRIVE RIVET SHALL BE 3/16" OR 3/8" ALUMINUM FLAT HEAD RIVET WITH STEEL PINS AND NYLON OR RUBBER WASHER.
3. DRIVE RIVET SHALL NOT BE USED FOR SIGNS WITHOUT BRACING.

A COPY OF THE ORIGINAL SEALED AND SIGNED DRAWING IS ON FILE IN THE CENTRAL OFFICE.

FOUR INCH SQUARE TUBE SIGN POST

SIGN BRACING AND SIGN PANEL ATTACHMENT DETAILS

VIRGINIA DEPARTMENT OF TRANSPORTATION

SPECIFICATION REFERENCE

700

STANDARD

THIS PAGE INTENTIONALLY LEFT BLANK

SPECIFICATION REFERENCE	TITLE VIRGINIA DEPARTMENT OF TRANSPORTATION	VDOT ROAD AND BRIDGE STANDARDS REVISION DATE	SHEET 1 OF 1 ____._

SSP-VA

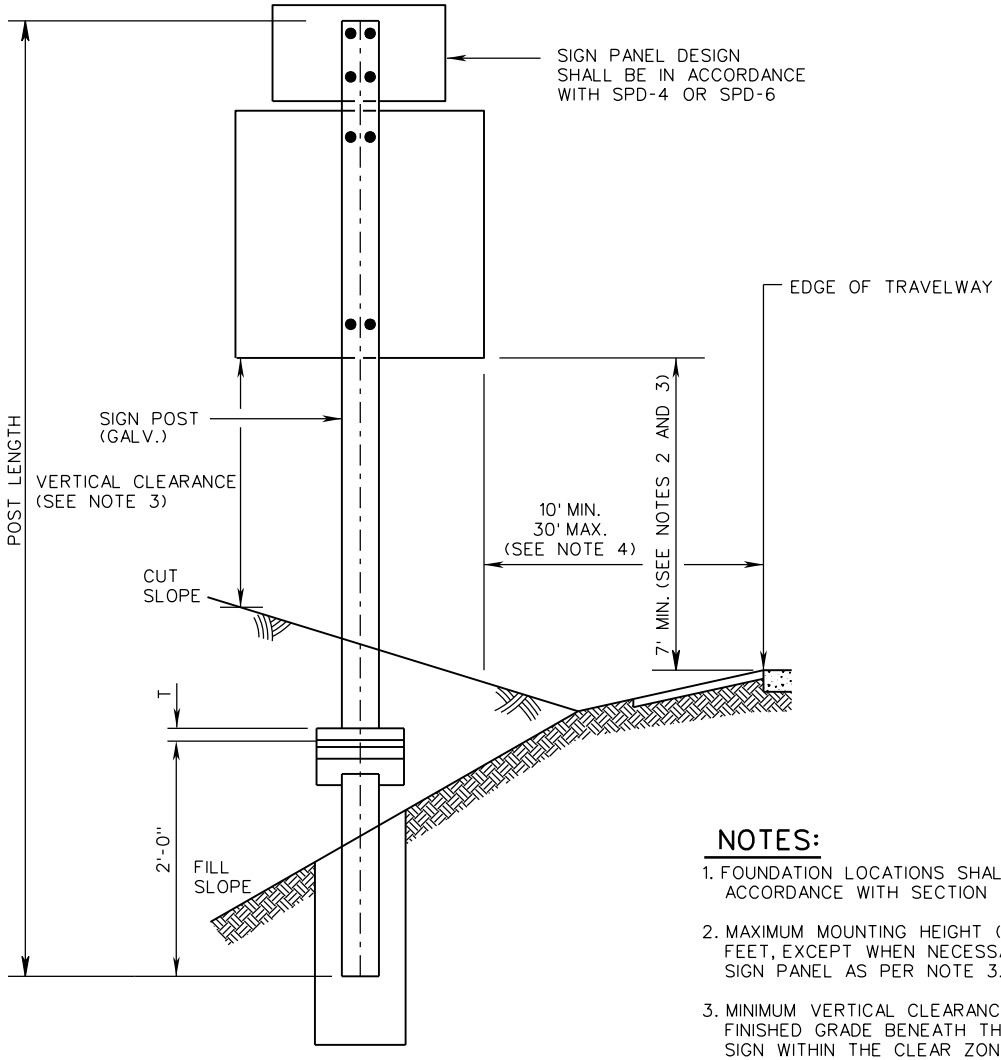

NOTES:

1. FOUNDATION LOCATIONS SHALL BE APPROVED BY ENGINEER PRIOR TO INSTALLATION IN ACCORDANCE WITH SECTION 700.

2. MAXIMUM MOUNTING HEIGHT (h) FOR THE BOTTOM-MOST SIGN PANEL(S) SHALL BE 8 FEET, EXCEPT WHEN NECESSARY TO ACHIEVE MINIMUM VERTICAL CLEARANCE BENEATH SIGN PANEL AS PER NOTE 3.

3. MINIMUM VERTICAL CLEARANCE (DISTANCE BETWEEN BOTTOM OF SIGN PANEL AND FINISHED GRADE BENEATH THE PANEL) SHALL BE 7 FEET FOR ANY PORTION OF THE SIGN WITHIN THE CLEAR ZONE. THIS MINIMUM VERTICAL CLEARANCE MAY BE REDUCED TO 5 FEET FOR EITHER OF THE FOLLOWING CONDITIONS:
   - WHEN SIGNS OR PORTIONS OF SIGNS ARE LOCATED MORE THAN 10 FEET UP A CUT SLOPE GREATER THAN 3:1, OR
   - WHEN THE SIGN IS LOCATED AT LEAST THE MINIMUM DISTANCE BEHIND CURB, BARRIER, OR GUARDRAIL AS PER NOTE 4.

4. THE LATERAL CLEARANCE TO THE SIGN PANEL SHALL BE A MINIMUM OF 2 FEET FROM THE FACE OF CURB OR 4 FEET FROM FACE OF BARRIER, IF PRESENT. UNLESS OTHERWISE APPROVED BY THE ENGINEER, SIGNS PLACED BEHIND GUARDRAIL SHALL BE LOCATED SUCH THAT THE NEAR SIDE EDGE OF THE SIGN PANEL IS OUTSIDE OF THE GUARDRAIL DEFLECTION DISTANCE.

VDOT ROAD AND BRIDGE STANDARDS	A COPY OF THE ORIGINAL SEALED AND SIGNED DRAWING IS ON FILE IN THE CENTRAL OFFICE.	SPECIFICATION REFERENCE
SHEET 1 OF 4	VA SIGN STRUCTURE INSTALLATION DETAILS	700
1322.10	REVISION DATE 01/15	VIRGINIA DEPARTMENT OF TRANSPORTATION

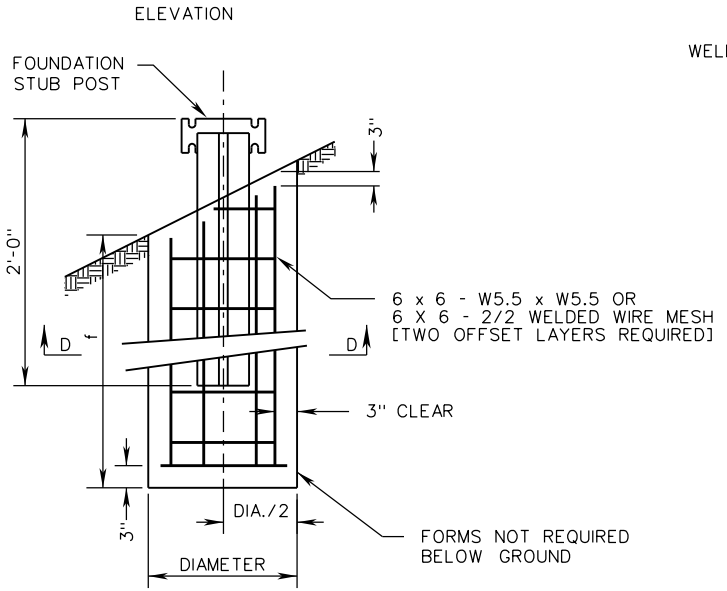

FOUNDATION

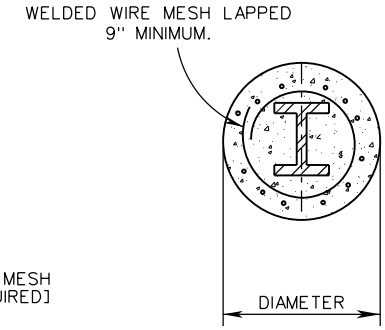

SECTION D-D

NOTES:

1. POST LENGTH IS FOR ESTIMATING PURPOSES ONLY. THE CONTRACTOR SHALL DETERMINE THE ACTUAL POST LENGTH AT THE FIELD LOCATION OF THE SIGN STRUCTURE BASED ON FINISHED GRADE ELEVATION.
2. TOTAL POST LENGTH QUANTITY = LENGTH OF POST ABOVE THE BOLT KEEPER PLATE + THE FOUNDATION STUB POST LENGTH (2'-0").

SIGN POST AND FOUNDATION DETAILS

STRUCTURE TYPE	SIGN PANEL DIMENSIONS		SIGN POST	POST LENGTH DIMENSIONS (SEE NOTES 1 & 2)	FOUNDATION DIMENSIONS		WELDED WIRE MESH		STEEL BASE PLATE
	W	H		SLOPE 3:1 TO 2:1	f	DIAMETER	LENGTH	SQ. FT.	T (THICKNESS)
VA-A	3'	3'	S3 x 5.7	12'-3"	3'-0"	1'-0"	2'-6"	5	½"
VA-B	4'	4'	W4 x 13	12'-3"	4'-6"	1'-9"	4'-4"	20	1"
VA-C	4'	5'		13'-3"					
VA-D	5'	3'		12'-9"					
VA-E	6'	5'		13'-9"					
VA-F	4'	-		13'-9"					
VA-G	5'	-		13'-0"					
VA-K	4'	5'		17'-3"					
VA-K	4'	4'		-					
VA-L	6'	6'		14'-6"					
VA-M	5'	5'		13'-9"					
VA-A2	6'	3'	W6 x 12	13'-9"					
VA-N	7'	7'	W6 x 12	15'-9"	6'-0"	2'-6"	5'-6"	40	1"
VA-O	13'	5'	W6 x 12	15'-9"	7'-0"	2'-6"	6'-6"	47	1"

SPECIFICATION REFERENCE	A COPY OF THE ORIGINAL SEALED AND SIGNED DRAWING IS ON FILE IN THE CENTRAL OFFICE.	VDOT ROAD AND BRIDGE STANDARDS
700	VA SIGN STRUCTURE INSTALLATION DETAILS VIRGINIA DEPARTMENT OF TRANSPORTATION	REVISION DATE 01/15 SHEET 2 OF 4 1322.11

SSP-VA

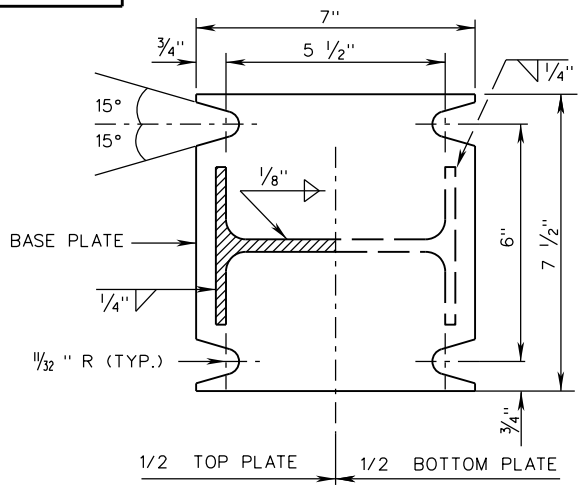

SECTION A-A
FOR W6 x 12 POST

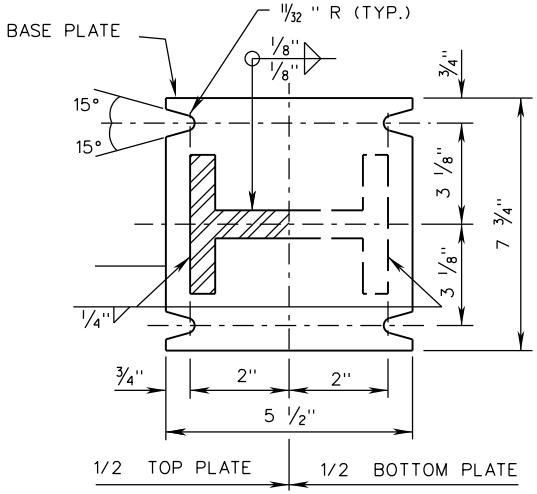

SECTION A-A
FOR W4 x 13 POST

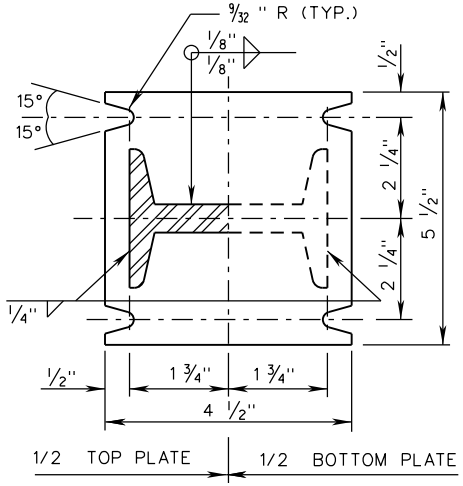

SECTION A-A
FOR S3 x 5.7 POST

STANDARD INSTALLATION

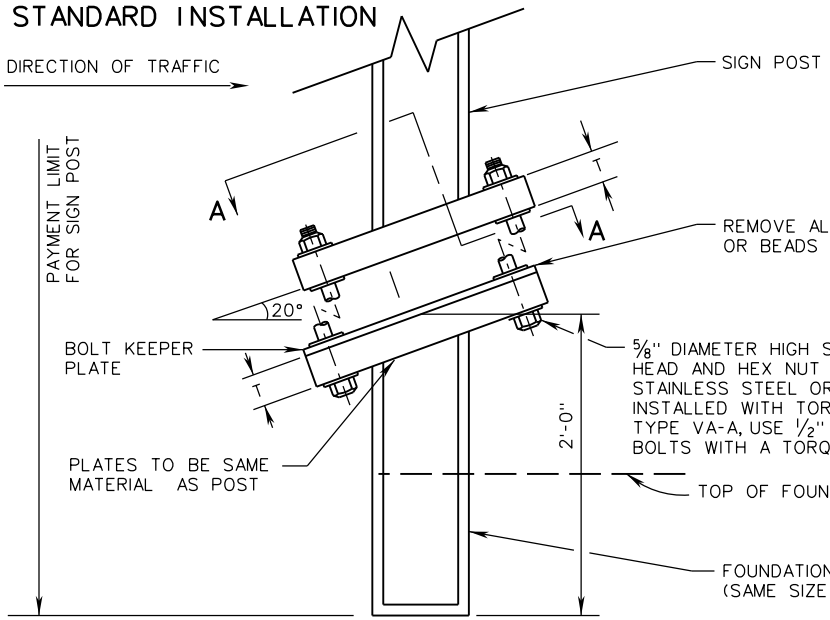

MEDIAN ONLY INSTALLATION

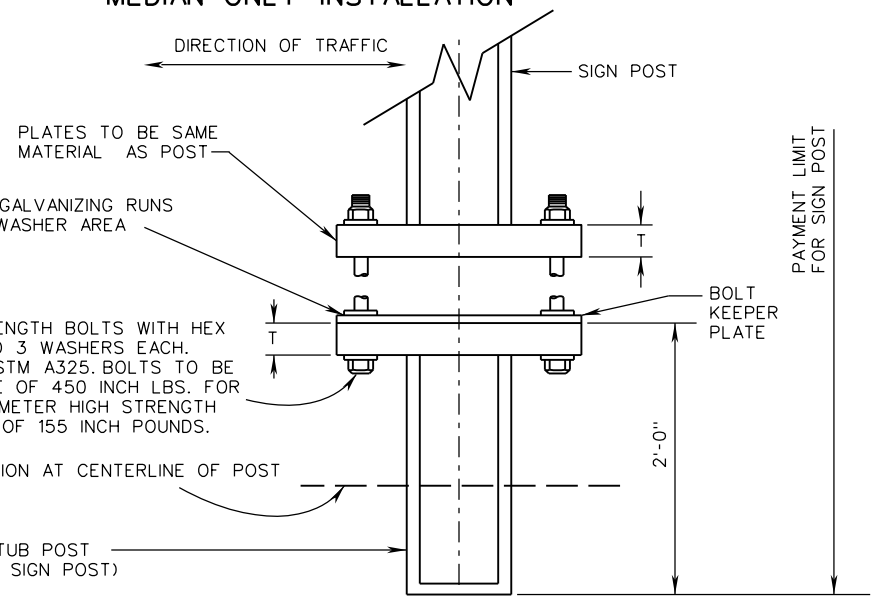

REMOVE ALL GALVANIZING RUNS OR BEADS IN WASHER AREA

5/8" DIAMETER HIGH STRENGTH BOLTS WITH HEX HEAD AND HEX NUT AND 3 WASHERS EACH. STAINLESS STEEL OR ASTM A325. BOLTS TO BE INSTALLED WITH TORQUE OF 450 INCH LBS. FOR TYPE VA-A, USE 1/2" DIAMETER HIGH STRENGTH BOLTS WITH A TORQUE OF 155 INCH POUNDS.

TOP OF FOUNDATION AT CENTERLINE OF POST

FOUNDATION STUB POST (SAME SIZE AS SIGN POST)

VDOT
ROAD AND BRIDGE STANDARDS

SHEET 3 OF 4
1322.12

REVISION DATE
01/15

A COPY OF THE ORIGINAL SEALED AND SIGNED DRAWING IS ON FILE IN THE CENTRAL OFFICE.

VA SIGN STRUCTURE

INSTALLATION DETAILS

VIRGINIA DEPARTMENT OF TRANSPORTATION

SPECIFICATION REFERENCE
700

NOTES:

1. 4" MAXIMUM PROJECTION WHEN MEASURED ABOVE A 60" CHORD ALIGNED RADIALLY TO THE CENTERLINE OF THE HIGHWAY AND CONNECTING ANY POINT, WITHIN THE LENGTH OF THE CHORD, ON THE GROUND SURFACE ON THE OTHER SIDE.
2. SEE STANDARD SSP-VIA FOR SHIM DETAIL.

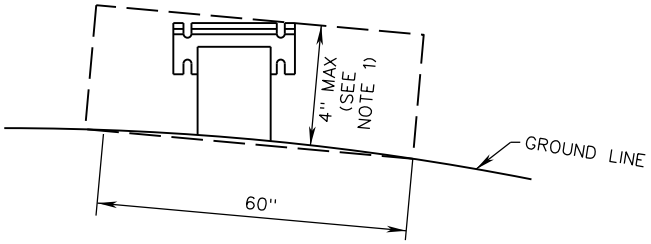

METHOD TO DETERMINE
MAXIMUM PROJECTION OF FOUNDATION STUB POST

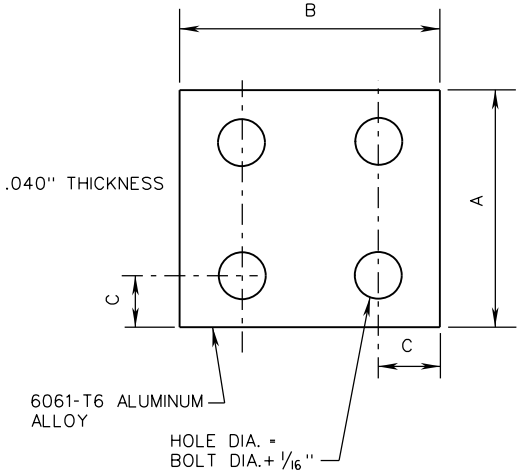

BOLT KEEPER PLATE

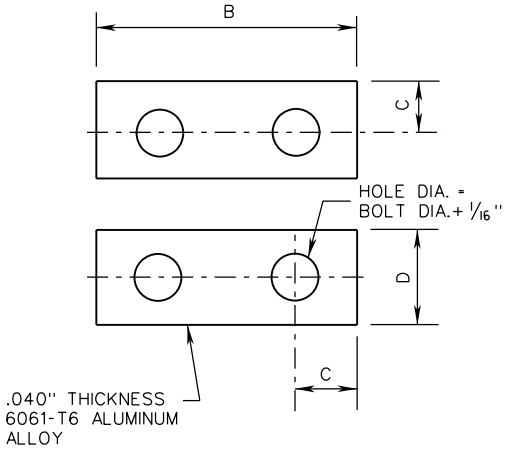

ALTERNATE BOLT KEEPER PLATE

BOLT KEEPER PLATE DATA

POST SHAPE	A	B	C	D
S3 x 5.7	5 1/2"	4 1/2"	1/2"	1"
W4 x 13	7 3/4"	5 1/2"	3/4"	1 1/2"
W6 x 12	7 1/2"	7"	3/4"	1 1/2"

SPECIFICATION REFERENCE	A COPY OF THE ORIGINAL SEALED AND SIGNED DRAWING IS ON FILE IN THE CENTRAL OFFICE.	VDOT ROAD AND BRIDGE STANDARDS	
700	VA SIGN STRUCTURE INSTALLATION DETAILS VIRGINIA DEPARTMENT OF TRANSPORTATION	REVISION DATE 01/15	SHEET 4 OF 4 1322.13

SSP-VIA

NOTES:

1. FOUNDATION LOCATIONS SHALL BE APPROVED BY ENGINEER PRIOR TO INSTALLATION IN ACCORDANCE WITH SECTION 700.

2. MINIMUM VERTICAL CLEARANCE (DISTANCE BETWEEN BOTTOM OF SIGN PANEL AND FINISHED GRADE BENEATH THE PANEL) SHALL BE 7 FEET FOR ANY PORTION OF THE SIGN WITHIN THE CLEAR ZONE. THIS MINIMUM VERTICAL CLEARANCE MAY BE REDUCED TO 5 FEET FOR EITHER OF THE FOLLOWING CONDITIONS:
   - WHEN SIGNS OR PORTIONS OF SIGNS ARE LOCATED MORE THAN 10 FEET UP A CUT SLOPE GREATER THAN 3:1, OR
   - WHEN THE SIGN IS LOCATED AT LEAST THE MINIMUM DISTANCE BEHIND CURB, BARRIER, OR GUARDRAIL AS PER NOTE 6.

3. SIGN PANEL SHALL BE DESIGNED IN ACCORDANCE WITH SPD-2, SPD-3 OR SPD-7.

4. THE VERTICAL T-BEAM SHALL BE 2"W X 2"D X ¼" THICK STRUCTURAL ALUMINUM ALLOY 6061-T6AT A MINIMUM LENGTH OF 6'-0" AND EXTENDED TO THE NEXT HORIZONTAL SUPPORT BAR ON THE SSP-VIA STRUCTURE.

5. THE T-BEAM SHALL BE ATTACHED TO THE SSP-VIA STRUCTURE BY THE FOLLOWING METHODS:
   - T-BEAM FOR THE SPD-2 SIGN PANEL SHALL BE ATTACHED BY USING A MINIMUM OF TWO POST CLIP BOLTS AT EACH CROSS MEMBER.
   - T-BEAM FOR THE SPD-3 SIGN PANEL SHALL BE ATTACHED BY USING TWO ASTM F593, ALLOY 304 STAINLESS STEEL ⅜" DIAMETER-16 UNC BOLT WITH STAINLESS STEEL NUT AND FLAT WASHER AT ZEE BAR CONNECTIONS AND TWO POST CLAMP AND BOLT AT EACH TEE-BAR CONNECTION.
   - T-BEAM FOR THE SPD-7 SIGN PANEL SHALL BE ATTACHED BY USING A MINIMUM OF TWO POST CLAMP AND POST CLAMP BOLTS AT EACH STIFFENER.

6. THE LATERAL CLEARANCE TO THE SIGN PANEL SHALL BE A MINIMUM OF 2 FEET FROM THE FACE OF CURB OR 4 FEET FROM FACE OF BARRIER, IF PRESENT. UNLESS OTHERWISE APPROVED BY THE ENGINEER, SIGNS PLACED BEHIND GUARDRAIL SHALL BE LOCATED SUCH THAT THE NEAR SIDE EDGE OF THE SIGN PANEL IS OUTSIDE OF THE GUARDRAIL DEFLECTION DISTANCE.

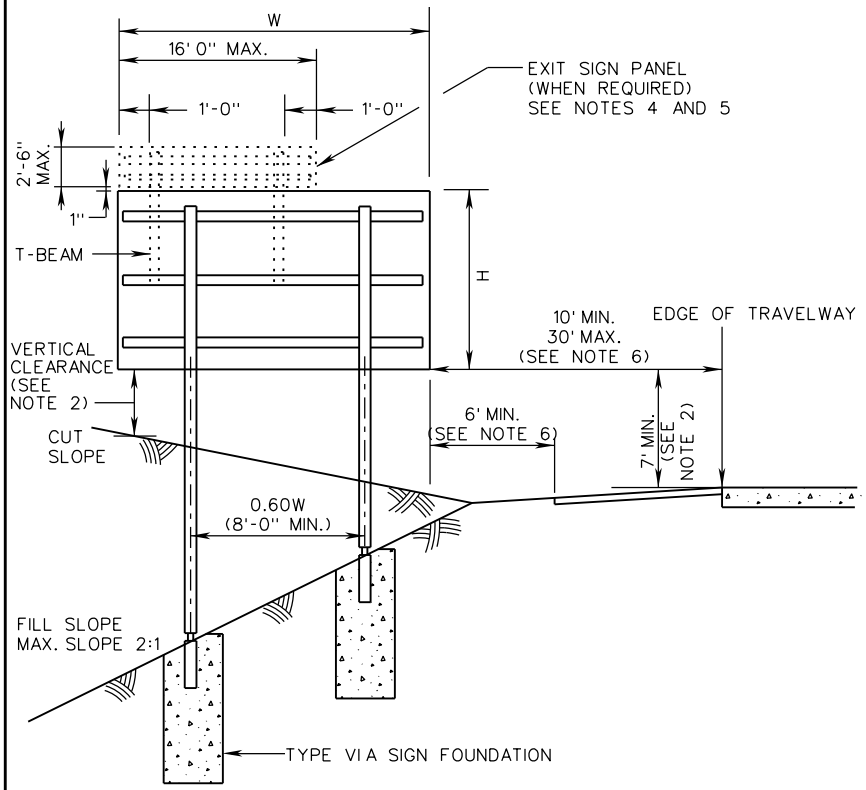

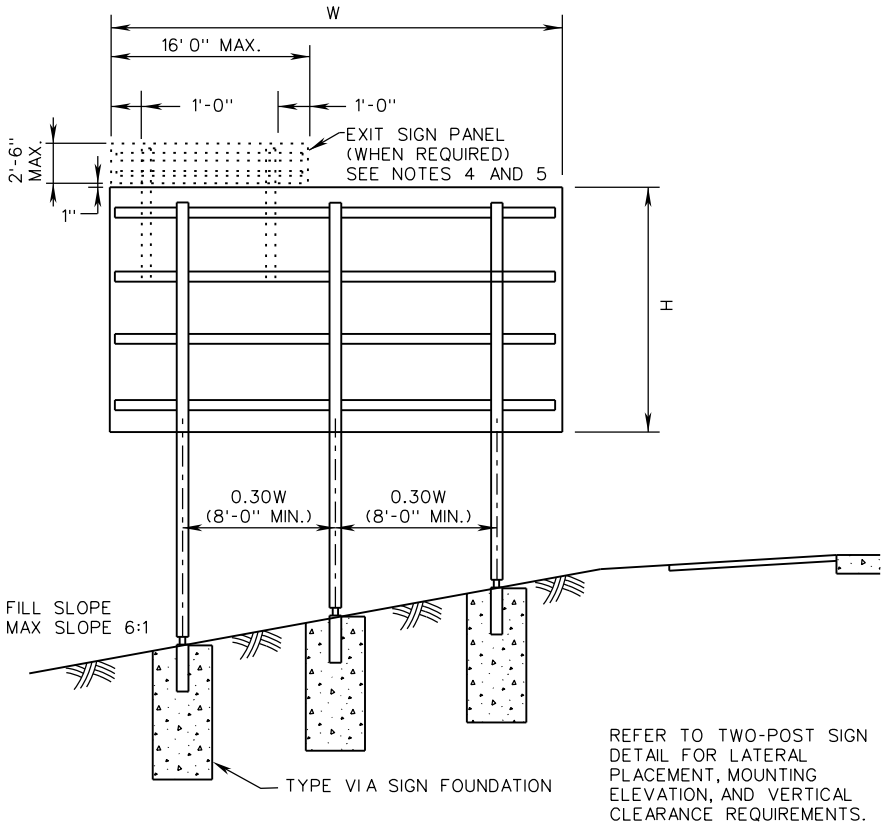

REFER TO TWO-POST SIGN DETAIL FOR LATERAL PLACEMENT, MOUNTING ELEVATION, AND VERTICAL CLEARANCE REQUIREMENTS.

VDOT ROAD AND BRIDGE STANDARDS	A COPY OF THE ORIGINAL SEALED AND SIGNED DRAWING IS ON FILE IN THE CENTRAL OFFICE. INTERSTATE SIGN STRUCTURE INSTALLATION DETAILS VIRGINIA DEPARTMENT OF TRANSPORTATION	SPECIFICATION REFERENCE
SHEET 1 OF 10 / 1323.10	REVISION DATE 01/15	700

SSP-VIA

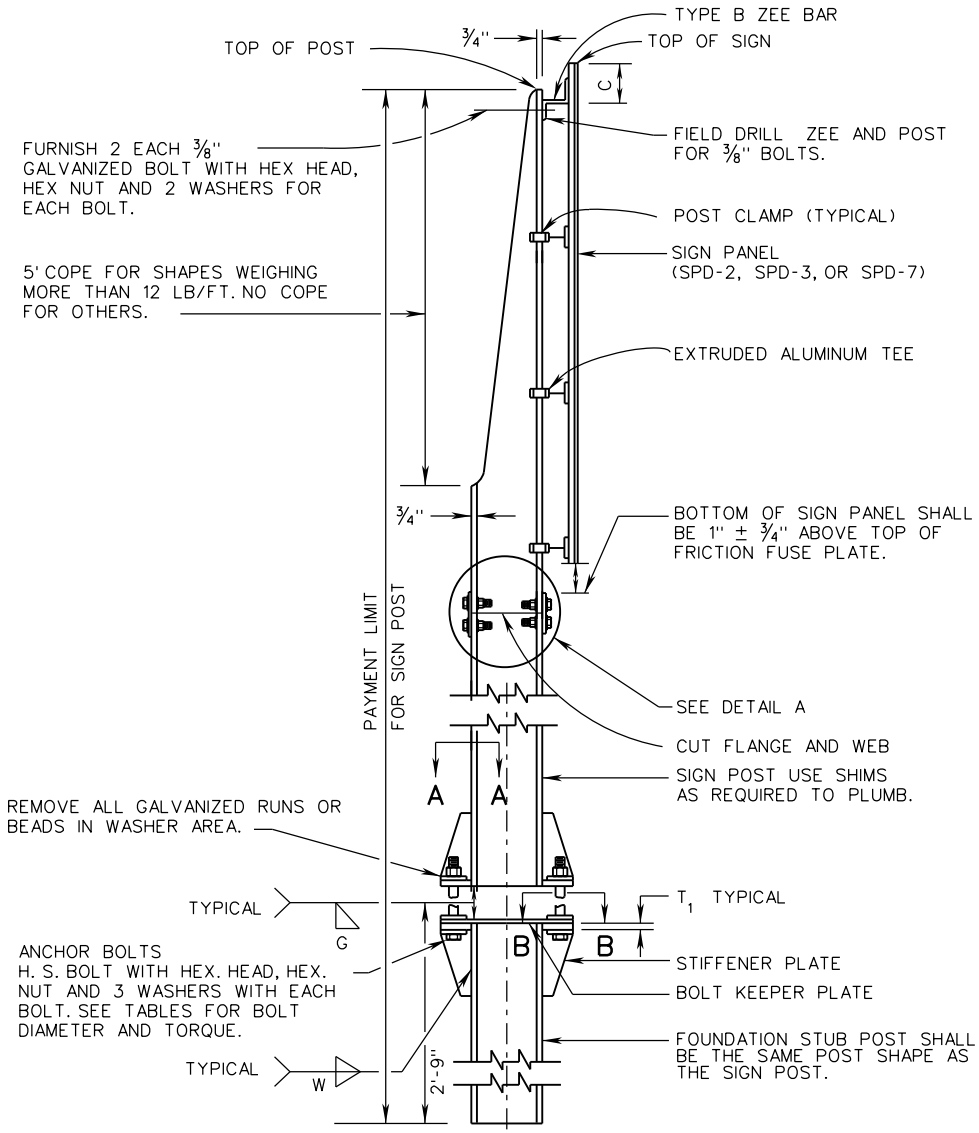

SIGN POST AND FOUNDATION STUB POST ELEVATION

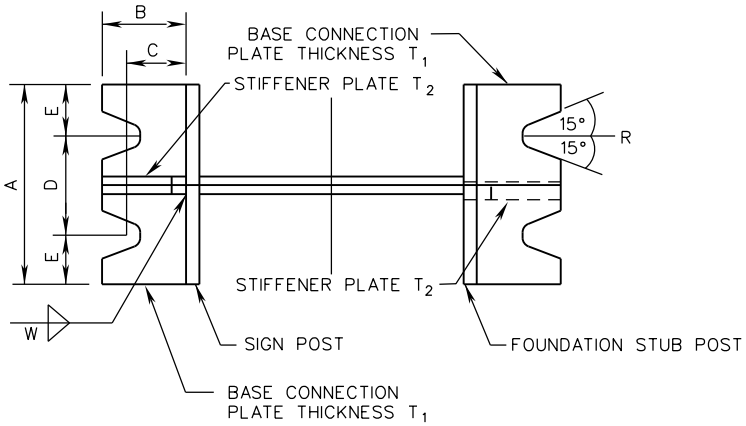

SECTION A-A SECTION B-B

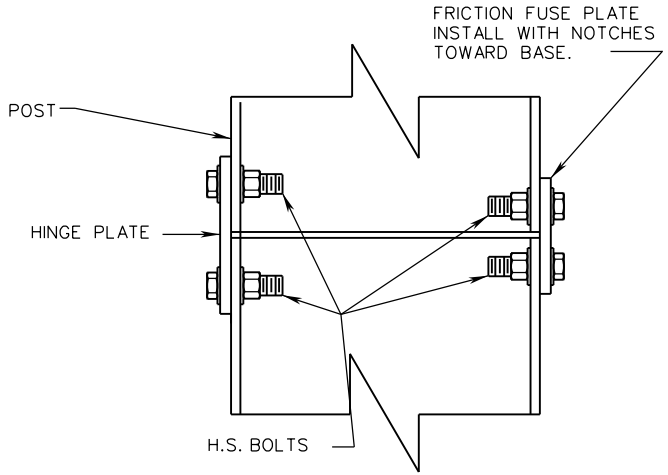

DETAIL A

DIRECTION OF TRAFFIC

NOTES:

1. ALL POST LENGTHS SHALL BE FIELD CHECKED BY CONTRACTOR PRIOR TO FABRICATION.

SPECIFICATION REFERENCE	A COPY OF THE ORIGINAL SEALED AND SIGNED DRAWING IS ON FILE IN THE CENTRAL OFFICE.	VDOT ROAD AND BRIDGE STANDARDS	
700	INTERSTATE SIGN STRUCTURE INSTALLATION DETAILS VIRGINIA DEPARTMENT OF TRANSPORTATION	REVISION DATE 01/15	SHEET 2 OF 10 1323.11

SSP-VIA

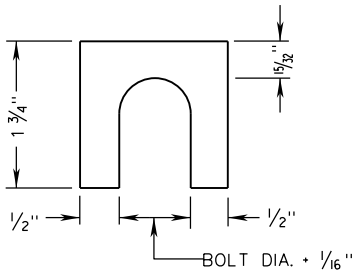

FURNISH 2 EACH .063"± AND 2 EACH .032"± THICK SHIMS PER POLE. SHIMS SHALL BE FABRICATED FROM BRASS CONFORMING TO ASTM B36 OR FROM STAINLESS STEEL WITH A MINIMUM CHROMIUM CONTENT OF 11.50% . NO MORE THAN 2 SHIMS SHALL BE USED PER BOLT WITH A MAXIMUM OF 4 SHIMS PER POST.

SHIM DETAIL

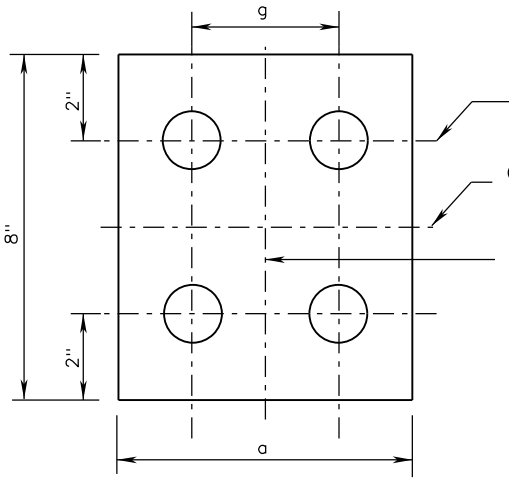

HINGE PLATE DETAIL

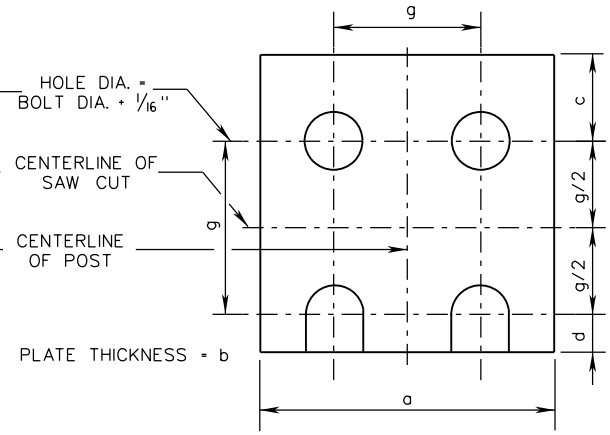

FUSE PLATE DETAIL

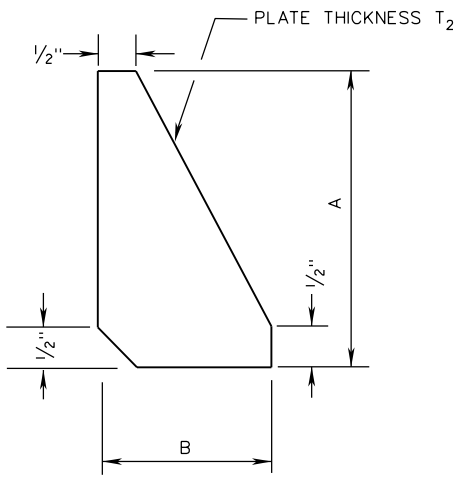

STIFFENER PLATE

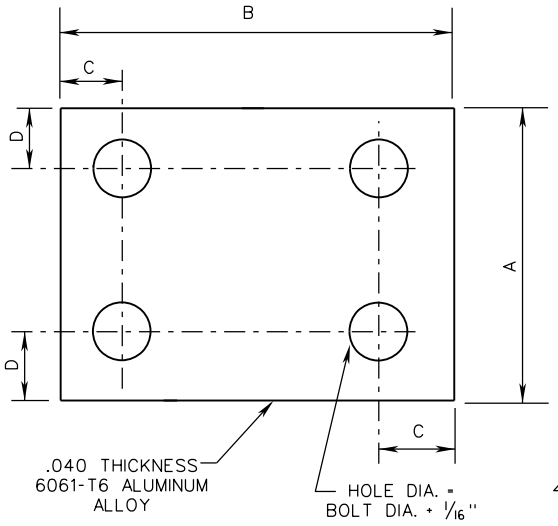

BOLT KEEPER PLATE

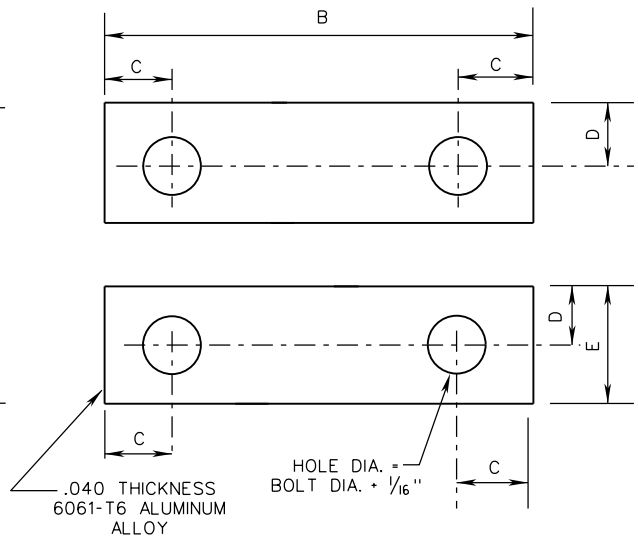

ALTERNATE BOLT KEEPER PLATE

VDOT ROAD AND BRIDGE STANDARDS	A COPY OF THE ORIGINAL SEALED AND SIGNED DRAWING IS ON FILE IN THE CENTRAL OFFICE.		SPECIFICATION REFERENCE
SHEET 3 OF 10	INTERSTATE SIGN STRUCTURE		700
1323.12	INSTALLATION DETAILS	REVISION DATE 01/15	
	VIRGINIA DEPARTMENT OF TRANSPORTATION		

SSP-VIA

TYPE VI A	FOOTING DIMENSIONS D	FOOTING DIMENSIONS d	BAR P LENGTH	BAR P BAR SIZE	BAR P NO.	BAR H BAR SIZE	BAR H NO.	BAR H LENGTH
A	2'-3"	4'-6"	4'-1"	# 4	8	# 4	5	6'-7"
B								
C								
D								
E								
F	3'-0"	7'-0"	6'-7"	# 6	8	# 4	8	9'-0"
G								
H								
J								
K								
L								
M	3'-6"	9'-0"	8'-7"	# 7	8	# 4	10	10'-7"
N								
O								
P								
Q	3'-0"	7'-0"	6'-7"	# 6	8	# 4	8	9'-0"
R								
S								
T								
U								
V								
W								
X	3'-0"	8'-0"	7'-7"	# 6	8	# 4	9	9'-0"
Y	3'-6"	9'-0"	8'-7"	# 7	8	# 4	10	10'-7"
Z								
AA								
BB								
CC	3'-0"	7'-0"	6'-7"	# 6	8	# 4	8	9'-0"
DD								
EE								
FF								
GG	3'-6"	9'-0"	8'-7"	# 7	8	# 4	10	10'-7"
HH								
JJ								
KK								
LL	3'-6"	10'-0"	9'-7"	# 8	8	# 4	11	10'-7"
MM								
NN								

TYPE VI A	FOOTING DIMENSIONS D	FOOTING DIMENSIONS d	BAR P LENGTH	BAR P BAR SIZE	BAR P NO.	BAR H BAR SIZE	BAR H NO.	BAR H LENGTH
OO	3'-0"	7'-0"	6'-7"	# 6	8	# 4	8	9'-0"
PP								
QQ								
RR								
SS								
TT	3'-0"	8'-0"	7'-7"	# 6	8	# 4	9	9'-0"
UU	3'-6"	9'-0"	8'-7"	# 7	8	# 4	10	10'-7"
VV								
WW								
XX								
YY	3'-6"	10'-0"	9'-7"	# 8	8	# 4	11	10'-7"
ZZ	3'-0"	7'-0"	6'-7"	# 6	8	# 4	8	9'-0"
AB	3'-0"	8'-0"	7'-7"	# 6	8	# 4	9	9'-0"
AC	3'-6"	9'-0"	8'-7"	# 7	8	# 4	10	10'-7"
AD								
AE								
AF	3'-6"	10'-0"	9'-7"	# 8	8	# 4	11	10'-7"
AG								
AH	4'-0"	12'-0"	11'-7"	# 9	8	# 4	13	12'-1"
AJ								
AK								
AL	4'-0"	9'-6"	9'-1"	# 7	8	# 4	10	12'-1"
AM								
AN								
AO								
AP	4'-0"	12'-0"	11'-7"	# 9	8	# 4	13	12'-1"
AQ								
AR								
AS								
AT								
AU	4'-0"	9'-6"	9'-1"	# 7	8	# 4	10	12'-1"
AV								
AW	4'-0"	12'-0"	11'-7"	# 9	8	# 4	13	12'-1"
AX								
AY								
AZ								
BC	4'-0"	13'-6"	13'-1"	# 10	8	# 4	14	12'-1"
BD								

PLAN

PARALLEL TO FACE AT FOOTING

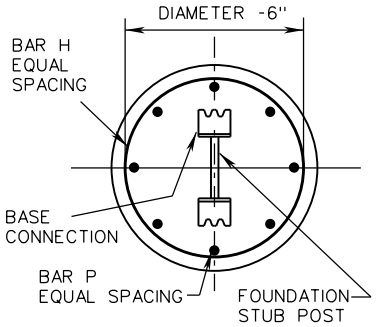

ELEVATION

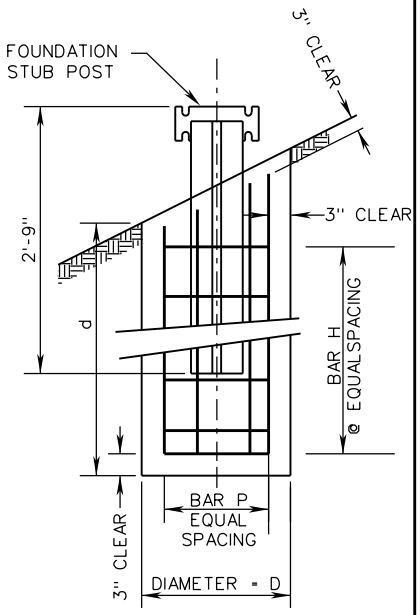

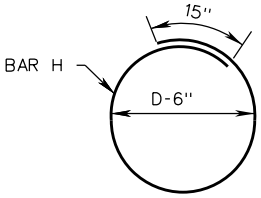

NOTES:

1. 4" MAXIMUM PROJECTION WHEN MEASURED ABOVE A 60" CHORD ALIGNED RADIALLY TO THE CENTERLINE OF THE HIGHWAY AND CONNECTING ANY POINT, WITHIN THE LENGTH OF THE CHORD, ON THE GROUND SURFACE ON THE OTHER SIDE.

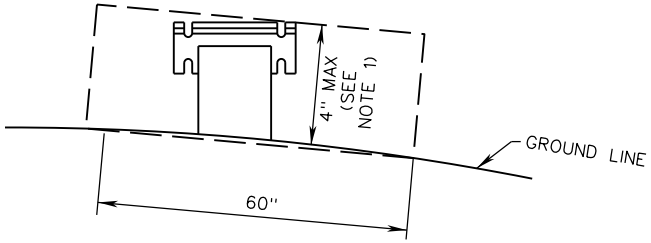

METHOD TO DETERMINE
MAXIMUM PROJECTION OF FOUNDATION STUB POST

SPECIFICATION REFERENCE
700

A COPY OF THE ORIGINAL SEALED AND SIGNED DRAWING IS ON FILE IN THE CENTRAL OFFICE.

INTERSTATE SIGN STRUCTURE

INSTALLATION DETAILS

VIRGINIA DEPARTMENT OF TRANSPORTATION

VDOT
ROAD AND BRIDGE STANDARDS

REVISION DATE	SHEET 4 OF 10
01/15	1323.13

SSP-VIA

SIGN STRUCTURE TYPE VIA	SIGN PANEL DIMENSIONS		POST SHAPE	POST LENGTH (SEE NOTE 1)			ANCHOR BOLTS	
	W	H		NO. 1	NO. 2	NO. 3	DIA.	TORQUE IN.-LBS.
A	---	---	---	---	---	---	---	---
B	12′	4′	W10X12	13′-1″	16′-5″	---	1/2″	200
C	11′	5′	W10X12	14′-1″	16′-7″	---	1/2″	200
D	---	---	---	---	---	---	---	---
E	10′	6′	W10X12	15′-0″	17′-9″	---	1/2″	200
F	12′	6′	W12X14	15′-5″	18′-5″	---	5/8″	600
G	14′	6′	W12X16	15′-9″	19′-1″	---	5/8″	600
H	16′	6′	W12X19	15′-8″	20′-2″	---	5/8″	600
J	18′	6′	W12X19	15′-11″	20′-11″	---	3/4″	900
K	20′	6′	W12X22	16′-2″	21′-8″	---	3/4″	900
L	22′	6′	W14X26	16′-4″	22′-6″	---	3/4″	900
M	24′	6′	W14X26	16′-7″	23′-3″	---	7/8″	1000
N	26′	6′	W14X26	16′-9″	24′-0″	---	7/8″	1000
O	28′	6′	W16X31	17′-1″	24′-10″	---	7/8″	1000
P	30′	6′	W16X31	17′-3″	25′-7″	---	7/8″	1000
Q	---	---	---	---	---	---	---	---
R	10′	8′	W12X14	16′-8″	19′-4″	---	5/8″	600
S	12′	8′	W12X16	16′-9″	20′-1″	---	5/8″	600
T	14′	8′	W12X19	17′-0″	20′-10″	---	3/4″	900
U	16′	8′	W12X22	17′-2″	21′-8″	---	3/4″	900
V	18′	8′	W14X22	17′-5″	22′-5″	---	3/4″	900
W	20′	8′	W14X26	17′-8″	23′-2″	---	7/8″	1000
X	22′	8′	W16X26	17′-10″	24′-0″	---	7/8″	1000
Y	24′	8′	W16X31	18′-1″	24′-9″	---	7/8″	1000
Z	26′	8′	W14X34	18′-4″	25′-6″	---	1″	1500

NOTES:

1. POST LENGTH IS FOR ESTIMATING PURPOSES ONLY. THE CONTRACTOR SHALL DETERMINE THE ACTUAL POST LENGTH AT THE FIELD LOCATION OF THE SIGN STRUCTURE BASED ON FINISHED GRADE ELEVATION.
2. TOTAL POST LENGTH QUANTITY = LENGTH OF POST ABOVE THE BOLT KEEPER PLATE + THE FOUNDATION STUB POST LENGTH (2′-9″).

VDOT
ROAD AND BRIDGE STANDARDS

SHEET 5 OF 10
1323.14

REVISION DATE
01/15

A COPY OF THE ORIGINAL SEALED AND SIGNED DRAWING IS ON FILE IN THE CENTRAL OFFICE.

INTERSTATE SIGN STRUCTURE

INSTALLATION DETAILS

VIRGINIA DEPARTMENT OF TRANSPORTATION

SPECIFICATION REFERENCE
700

SIGN STRUCTURE TYPE VIA	SIGN PANEL DIMENSIONS		POST SHAPE	POST LENGTH (SEE NOTE 1)			ANCHOR BOLTS	
	W	H		NO. 1	NO. 2	NO. 3	DIA.	TORQUE IN.-LBS.
AA	28′	8′	W18X35	18′-6″	26′-3″	---	1″	1500
BB	30′	8′	W18X40	18′-9″	27′-1″	---	1″	1500
CC	10′	10′	W12X19	18′-6″	21′-3″	---	5/8″	600
DD	12′	10′	W14X22	18′-9″	22′-1″	---	3/4″	900
EE	14′	10′	W14X22	19′-0″	22′-10″	---	3/4″	900
FF	16′	10′	W14X26	19′-2″	23′-8″	---	7/8″	1000
GG	18′	10′	W16X31	19′-5″	24′-5″	---	7/8″	1000
HH	20′	10′	W16X31	19′-8″	25′-2″	---	1″	1500
JJ	22′	10′	W18X35	19′-10″	26′-0″	---	1″	1500
KK	24′	10′	W18X40	20′-1″	26′-9″	---	1″	1500
LL	26′	10′	W21X44	20′-4″	27′-6″	---	1″	1500
MM	28′	10′	W21X44	20′-6″	28′-3″	---	1″	1500
NN	30′	10′	W21X44	21′-0″	28′-9″	---	1 1/8″	2540
OO	10′	9′	W12X16	17′-6″	20′-3″	---	5/8″	600
PP	12′	9′	W12X19	17′-9″	21′-1″	---	3/4″	900
QQ	14′	9′	W12X22	18′-0″	21′-10″	---	3/4″	900
RR	16′	9′	W14X26	18′-2″	22′-8″	---	3/4″	900
SS	18′	9′	W14X26	18′-5″	23′-5″	---	7/8″	1000
TT	20′	9′	W16X31	18′-8″	24′-2″	---	7/8″	1000
UU	22′	9′	W16X31	18′-10″	25′-0″	---	7/8″	1000
VV	24′	9′	W18X35	19′-1″	25′-9″	---	1″	1500
WW	26′	9′	W18X35	19′-4″	26′-6″	---	1″	1500
XX	28′	9′	W18X40	19′-10″	27′-0″	---	1″	1500
YY	30′	9′	W21X44	20′-4″	27′-6″	---	1″	1500
ZZ	12′	12′	W14X26	20′-9″	24′-1″	---	7/8″	1000

NOTES:

1. POST LENGTH IS FOR ESTIMATING PURPOSES ONLY. THE CONTRACTOR SHALL DETERMINE THE ACTUAL POST LENGTH AT THE FIELD LOCATION OF THE SIGN STRUCTURE BASED ON FINISHED GRADE ELEVATION.
2. TOTAL POST LENGTH QUANTITY = LENGTH OF POST ABOVE THE BOLT KEEPER PLATE + THE FOUNDATION STUB POST LENGTH (2′-9″).

SPECIFICATION REFERENCE

700

A COPY OF THE ORIGINAL SEALED AND SIGNED DRAWING IS ON FILE IN THE CENTRAL OFFICE.

INTERSTATE SIGN STRUCTURE

INSTALLATION DETAILS

VIRGINIA DEPARTMENT OF TRANSPORTATION

VDOT

ROAD AND BRIDGE STANDARDS

REVISION DATE 01/15

SHEET 6 OF 10

1323.15

SSP-VIA

SIGN STRUCTURE TYPE VIA	SIGN PANEL DIMENSIONS		POST SHAPE	POST LENGTH (SEE NOTE 1)			ANCHOR BOLTS	
	W	H		NO. 1	NO. 2	NO. 3	DIA.	TORQUE IN.-LBS.
AB	14′	12′	W16X26	21′-0″	24′-10″	---	7/8″	1000
AC	16′	12′	W16X31	21′-2″	25′-8″	---	7/8″	1000
AD	18′	12′	W14X34	21′-5″	26′-5″	---	1″	1500
AE	20′	12′	W16X40	21′-5″	26′-11″	---	1″	1500
AF	22′	12′	W18X40	21′-7″	27′-9″	---	1 1/8″	2540
AG	24′	12′	W21X44	21′-10″	28′-6″	---	1 1/8″	2540
AH	26′	12′	W18X35	19′-5″	20′-11″	22′-5″	1″	1500
AJ	28′	12′	W18X35	19′-6″	21′-2″	22′-9″	1″	1500
AK	30′	12′	W18X40	19′-6″	21′-3″	23′-0″	1″	1500
AL	14′	14′	W16X31	23′-0″	26′-10″	---	1″	1500
AM	16′	14′	W18X35	23′-2″	27′-8″	---	1″	1500
AN	18′	14′	W18X40	23′-5″	28′-5″	---	1″	1500
AO	20′	14′	W21X44	23′-8″	29′-2″	---	1 1/8″	2540
AP	22′	14′	W16X40	21′-4″	22′-8″	23′-11″	1″	1500
AQ	24′	14′	W18X35	21′-4″	22′-9″	24′-2″	1″	1500
AR	26′	14′	W18X40	21′-5″	22′-11″	24′-5″	1″	1500
AS	28′	14′	W21X44	21′-6″	23′-2″	24′-9″	1″	1500
AT	30′	14′	W21X44	21′-6″	23′-3″	25′-0″	1″	1500
AU	16′	16′	W18X40	25′-2″	29′-8″	---	1 1/8″	2540
AV	18′	16′	W21X44	25′-5	30′-5″	---	1 1/8″	2540
AW	20′	16′	W18X35	23′-1″	24′-4″	25′-7″	1″	1500
AX	22′	16′	W18X40	23′-4″	24′-8″	25′-11″	1″	1500
AY	24′	16′	W21X44	23′-6″	24′-10″	26′-2″	1″	1500
AZ	26′	16′	W21X44	23′-6″	25′-0″	26′-6″	1″	1500
BC	28′	16′	W21X44	23′-6″	25′-2″	26′-9″	1″	1500
BD	30′	16′	W21X44	23′-6″	25′-3″	27′-0″	1 1/8″	2540

NOTES:

1. POST LENGTH IS FOR ESTIMATING PURPOSES ONLY. THE CONTRACTOR SHALL DETERMINE THE ACTUAL POST LENGTH AT THE FIELD LOCATION OF THE SIGN STRUCTURE BASED ON FINISHED GRADE ELEVATION.
2. TOTAL POST LENGTH QUANTITY = LENGTH OF POST ABOVE THE BOLT KEEPER PLATE + THE FOUNDATION STUB POST LENGTH (2′-9″).

VDOT
ROAD AND BRIDGE STANDARDS

SHEET 7 OF 10
1323.16

REVISION DATE
01/15

A COPY OF THE ORIGINAL SEALED AND SIGNED DRAWING IS ON FILE IN THE CENTRAL OFFICE.

INTERSTATE SIGN STRUCTURE

INSTALLATION DETAILS

VIRGINIA DEPARTMENT OF TRANSPORTATION

SPECIFICATION REFERENCE
700

SIGN STRUCTURE TYPE VIA	SUPPORT																					
	BASE CONNECTION DATA TABLE									FUSE AND HINGE PLATE DATA TABLE							BOLT KEEPER PLATE DATA TABLE					
	A	B	C	D	E	T_1	T_2	W	R	BOLT DIA.	a	b	c	d	g	g/2	BOLT DIA.	A	B	C	D	E
A	---	---	---	---	---	---	---	---	---	---	---	---	---	---	---	---	---	---	---	---	---	---
B	5"	2"	1 1/4"	2 3/4"	1 1/8"	5/8"	1/2"	1/4"	9/32"	1/2"	4"	3/16"	11/16"	5/8"	2 1/4"	1 1/8"	1/2"	5"	13 7/8"	3/4"	1 1/8"	2 1/4"
C	5"	2"	1 1/4"	2 3/4"	1 1/8"	5/8"	1/2"	1/4"	9/32"	1/2"	4"	3/16"	11/16"	5/8"	2 1/4"	1 1/8"	1/2"	5"	13 7/8"	3/4"	1 1/8"	2 1/4"
D	---	---	---	---	---	---	---	---	---	---	---	---	---	---	---	---	---	---	---	---	---	---
E	5"	2"	1 1/4"	2 3/4"	1 1/8"	5/8"	1/2"	1/4"	9/32"	1/2"	4"	3/16"	11/16"	5/8"	2 1/4"	1 1/8"	1/2"	5"	13 7/8"	3/4"	1 1/8"	2 1/4"
F	5"	2"	1 1/4"	2 3/4"	1 1/8"	3/4"	1/2"	1/4"	11/32"	1/2"	4"	1/4"	11/16"	5/8"	2 1/4"	1 1/8"	5/8"	5"	15 7/8"	3/4"	1 1/8"	2 1/4"
G	5"	2"	1 1/4"	2 3/4"	1 1/8"	3/4"	1/2"	1/4"	11/32"	1/2"	4"	1/4"	11/16"	5/8"	2 1/4"	1 1/8"	5/8"	5"	16"	3/4"	1 1/8"	2 1/4"
H	6"	2 1/4"	1 3/8"	3 1/2"	1 1/4"	7/8"	5/8"	1/4"	11/32"	1/2"	4"	3/8"	11/16"	5/8"	2 1/4"	1 1/8"	5/8"	6"	16 5/8"	7/8"	1 1/4"	2 1/2"
J	6"	2 1/4"	1 3/8"	3 1/2"	1 1/4"	7/8"	5/8"	1/4"	13/32"	1/2"	4"	3/8"	11/16"	5/8"	2 1/4"	1 1/8"	3/4"	6"	16 5/8"	7/8"	1 1/4"	2 1/2"
K	6"	2 1/4"	1 3/8"	3 1/2"	1 1/4"	7/8"	5/8"	1/4"	13/32"	5/8"	4"	7/16"	7/8"	3/4"	2 1/4"	1 1/8"	3/4"	6"	16 3/4"	7/8"	1 1/4"	2 1/2"
L	7"	2 3/4"	2"	4"	1 1/2"	1"	3/4"	5/16"	13/32"	5/8"	5"	7/16"	7/8"	3/4"	2 3/4"	1 3/8"	3/4"	7"	19 3/8"	3/4"	1 1/2"	3"
M	7"	2 3/4"	2"	4"	1 1/2"	1"	3/4"	5/16"	15/32"	5/8"	5"	7/16"	7/8"	3/4"	2 3/4"	1 3/8"	7/8"	7"	19 3/8"	3/4"	1 1/2"	3"
N	7"	2 3/4"	2"	4"	1 1/2"	1"	3/4"	5/16"	15/32"	5/8"	5"	7/16"	7/8"	3/4"	2 3/4"	1 3/8"	7/8"	7"	19 3/8"	3/4"	1 1/2"	3"
O	7"	2 3/4"	2"	4"	1 1/2"	1 1/8"	3/4"	5/16"	15/32"	5/8"	5 1/2"	7/16"	7/8"	3/4"	2 3/4"	1 3/8"	7/8"	7"	21 3/8"	3/4"	1 1/2"	3"
P	7"	2 3/4"	2"	4"	1 1/2"	1 1/8"	3/4"	5/16"	15/32"	5/8"	5 1/2"	7/16"	7/8"	3/4"	2 3/4"	1 3/8"	7/8"	7"	21 3/8"	3/4"	1 1/2"	3"
Q	---	---	---	---	---	---	---	---	---	---	---	---	---	---	---	---	---	---	---	---	---	---
R	5"	2"	1 1/4"	2 3/4"	1 1/8"	3/4"	1/2"	1/4"	11/32"	1/2"	4"	1/4"	11/16"	5/8"	2 1/4"	1 1/8"	5/8"	5"	15 7/8"	3/4"	1 1/8"	2 1/4"
S	5"	2"	1 1/4"	2 3/4"	1 1/8"	3/4"	1/2"	1/4"	11/32"	1/2"	4"	1/4"	11/16"	5/8"	2 1/4"	1 1/8"	5/8"	5"	16"	7/8"	1 1/8"	2 1/4"
T	6"	2 1/4"	1 3/8"	3 1/2"	1 1/4"	7/8"	5/8"	1/4"	13/32"	5/8"	4"	3/8"	7/8"	3/4"	2 1/4"	1 1/8"	3/4"	6"	16 5/8"	7/8"	1 1/4"	2 1/2"
U	6"	2 1/4"	1 3/8"	3 1/2"	1 1/4"	7/8"	5/8"	1/4"	13/32"	3/4"	4"	7/16"	1 1/16"	7/8"	2 1/4"	1 1/8"	3/4"	6"	16 3/4"	7/8"	1 1/4"	2 1/2"
V	6"	2 1/4"	1 3/8"	3 1/2"	1 1/4"	7/8"	5/8"	1/4"	13/32"	3/4"	5"	5/16"	1 1/16"	7/8"	2 3/4"	1 3/8"	3/4"	6"	18 1/4"	3/4"	1 1/4"	2 1/2"
W	7"	2 3/4"	2"	4"	1 1/2"	1"	3/4"	5/16"	15/32"	3/4"	5"	7/16"	1 1/16"	7/8"	2 3/4"	1 3/8"	7/8"	7"	19 3/8"	3/4"	1 1/2"	3"
X	7"	2 3/4"	2"	4"	1 1/2"	1"	3/4"	5/16"	15/32"	3/4"	5 1/2"	3/8"	1 1/16"	7/8"	2 3/4"	1 3/8"	7/8"	7"	21 1/4"	3/4"	1 1/2"	3"
Y	7"	2 3/4"	2"	4"	1 1/2"	1 1/8"	3/4"	5/16"	15/32"	3/4"	5 1/2"	7/16"	1 1/16"	7/8"	2 3/4"	1 3/8"	7/8"	7"	21 3/8"	3/4"	1 1/2"	3"
Z	7"	2 3/4"	2"	4"	1 1/2"	1 1/8"	3/4"	5/16"	17/32"	3/4"	6 3/4"	7/16"	1 1/16"	7/8"	3 1/2"	1 3/4"	1"	7"	19 1/2"	3/4"	1 1/2"	3"

SPECIFICATION REFERENCE	INTERSTATE SIGN STRUCTURE	VDOT
700	INSTALLATION DETAILS	ROAD AND BRIDGE STANDARDS
	VIRGINIA DEPARTMENT OF TRANSPORTATION	REVISION DATE / SHEET 8 OF 10
		1323.17

SSP-VIA

SIGN STRUCTURE TYPE VIA	SUPPORT																					
	BASE CONNECTION DATA TABLE									FUSE AND HINGE PLATE DATA TABLE							BOLT KEEPER PLATE DATA TABLE					
	A	B	C	D	E	T_1	T_2	W	R	BOLT DIA.	a	b	c	d	g	g/2	BOLT DIA.	A	B	C	D	E
AA	7"	2 3/4"	2"	4"	1 1/2"	1 1/8"	3/4"	5/16"	17/32"	3/4"	6"	7/16"	1 1/16"	7/8"	3 1/2"	1 3/4"	1"	7"	23 1/4"	3/4"	1 1/2"	3"
BB	7"	2 3/4"	2"	4"	1 1/2"	1 1/8"	3/4"	5/16"	17/32"	3/4"	6"	1/2"	1 1/16"	7/8"	3 1/2"	1 3/4"	1"	7"	23 3/8"	7/8"	1 1/2"	3"
CC	6"	2 1/4"	1 3/8"	3 1/2"	1 1/4"	7/8"	5/8"	1/4"	11/32"	5/8"	4"	3/8"	7/8"	3/4"	2 1/4"	1 1/8"	5/8"	6"	16 5/8"	7/8"	1 1/4"	2 1/2"
DD	6"	2 1/4"	1 3/8"	3 1/2"	1 1/4"	7/8"	5/8"	1/4"	13/32"	3/4"	5"	5/16"	1 1/16"	7/8"	2 3/4"	1 3/8"	3/4"	6"	18 1/4"	7/8"	1 1/4"	2 1/2"
EE	6"	2 1/4"	1 3/8"	3 1/2"	1 1/4"	7/8"	5/8"	1/4"	13/32"	3/4"	5"	5/16"	1 1/16"	7/8"	2 3/4"	1 3/8"	3/4"	6"	18 1/4"	3/4"	1 1/4"	2 1/2"
FF	7"	2 3/4"	2"	4"	1 1/2"	1"	3/4"	5/16"	15/32"	3/4"	5"	7/16"	1 1/16"	7/8"	2 3/4"	1 3/8"	7/8"	7"	19 3/8"	3/4"	1 1/2"	3"
GG	7"	2 3/4"	2"	4"	1 1/2"	1 1/8"	3/4"	5/16"	15/32"	3/4"	5 1/2"	7/16"	1 1/16"	7/8"	2 3/4"	1 3/8"	7/8"	7"	21 3/8"	3/4"	1 1/2"	3"
HH	7"	2 3/4"	2"	4"	1 1/2"	1 1/8"	3/4"	5/16"	17/32"	7/8"	5 1/2"	7/16"	1 1/4"	1"	2 3/4"	1 3/8"	1"	7"	21 3/8"	3/4"	1 1/2"	3"
JJ	7"	2 3/4"	2"	4"	1 1/2"	1 1/8"	3/4"	5/16"	17/32"	7/8"	6"	7/16"	1 1/4"	1"	3 1/2"	1 3/4"	1"	7"	23 1/4"	3/4"	1 1/2"	3"
KK	7"	2 3/4"	2"	4"	1 1/2"	1 1/8"	3/4"	5/16"	17/32"	7/8"	6"	1/2"	1 1/4"	1"	3 1/2"	1 3/4"	1"	7"	23 3/8"	3/4"	1 1/2"	3"
LL	8"	3"	2 1/4"	4 1/2"	1 3/4"	1 1/4"	3/4"	3/8"	17/32"	7/8"	6 1/2"	7/16"	1 1/4"	1"	3 1/2"	1 3/4"	1"	8"	26 5/8"	3/4"	1 3/4"	3 1/2"
MM	8"	3"	2 1/4"	4 1/2"	1 3/4"	1 1/4"	3/4"	3/8"	17/32"	7/8"	6 1/2"	7/16"	1 1/4"	1"	3 1/2"	1 3/4"	1"	8"	26 5/8"	3/4"	1 3/4"	3 1/2"
NN	8"	3"	2 1/4"	4 1/2"	1 3/4"	1 1/4"	3/4"	3/8"	19/32"	7/8"	6 1/2"	7/16"	1 1/4"	1"	3 1/2"	1 3/4"	1 1/8"	8"	26 5/8"	3/4"	1 3/4"	3 1/2"
OO	5"	2"	1 1/4"	2 3/4"	1 1/8"	3/4"	1/2"	1/4"	11/32"	5/8"	4"	1/4"	7/8"	3/4"	2 1/4"	1 1/8"	5/8"	5"	16"	3/4"	1 1/8"	2 1/4"
PP	6"	2 1/4"	1 3/8"	3 1/2"	1 1/4"	7/8"	5/8"	1/4"	13/32"	3/4"	4"	3/8"	1 1/16"	7/8"	2 1/4"	1 1/8"	3/4"	6"	16 5/8"	7/8"	1 1/4"	2 1/2"
QQ	6"	2 1/4"	1 3/8"	3 1/2"	1 1/8"	7/8"	5/8"	1/4"	13/32"	3/4"	4"	7/16"	1 1/16"	7/8"	2 1/4"	1 1/8"	3/4"	6"	16 3/4"	7/8"	1 1/4"	2 1/2"
RR	7"	2 3/4"	2"	4"	1 1/2"	1"	3/4"	5/16"	13/32"	3/4"	5"	7/16"	1 1/16"	7/8"	2 3/4"	1 3/8"	3/4"	7"	19 3/8"	3/4"	1 1/2"	3"
SS	7"	2 3/4"	2"	4"	1 1/2"	1"	3/4"	5/16"	15/32"	3/4"	5"	7/16"	1 1/16"	7/8"	2 3/4"	1 3/8"	7/8"	7"	19 3/8"	3/4"	1 1/2"	3"
TT	7"	2 3/4"	2"	4"	1 1/2"	1 1/8"	3/4"	5/16"	15/32"	3/4"	5 1/2"	7/16"	1 1/16"	7/8"	2 3/4"	1 3/8"	7/8"	7"	21 3/8"	3/4"	1 1/2"	3"
UU	7"	2 3/4"	2"	4"	1 1/2"	1 1/8"	3/4"	5/16"	15/32"	3/4"	5 1/2"	7/16"	1 1/16"	7/8"	2 3/4"	1 3/8"	7/8"	7"	21 3/8"	3/4"	1 1/2"	3"
VV	7"	2 3/4"	2"	4"	1 1/2"	1 1/8"	3/4"	5/16"	17/32"	3/4"	6"	7/16"	1 1/16"	7/8"	3 1/2"	1 3/4"	1"	7"	23 1/4"	3/4"	1 1/2"	3"
WW	7"	2 3/4"	2"	4"	1 1/2"	1 1/8"	3/4"	5/16"	17/32"	3/4"	6"	7/16"	1 1/16"	7/8"	3 1/2"	1 3/4"	1"	7"	23 1/4"	3/4"	1 1/2"	3"
XX	7"	2 3/4"	2"	4"	1 1/2"	1 1/4"	3/4"	5/16"	17/32"	3/4"	6"	1/2"	1 1/16"	7/8"	3 1/2"	1 3/4"	1"	7"	23 3/8"	3/4"	1 1/2"	3"
YY	8"	3"	2 1/4"	4 1/2"	1 3/4"	1 1/4"	3/4"	3/8"	17/32"	3/4"	6 1/2"	7/16"	1 1/16"	7/8"	3 1/2"	1 3/4"	1"	8"	26 5/8"	3/4"	1 3/4"	3 1/2"
ZZ	7"	2 3/4"	2"	4"	1 1/2"	1"	3/4"	5/16"	15/32"	7/8"	6 1/2"	7/16"	1 1/4"	1"	2 3/4"	1 3/8"	7/8"	7"	19 3/8"	3/4"	1 1/2"	3"

VDOT
ROAD AND BRIDGE STANDARDS

SHEET 9 OF 10

REVISION DATE

1323.18

INTERSTATE SIGN STRUCTURE

INSTALLATION DETAILS

VIRGINIA DEPARTMENT OF TRANSPORTATION

SPECIFICATION REFERENCE

700

SSP-VIA

SIGN STRUCTURE TYPE VIA	SUPPORT																					
	BASE CONNECTION DATA TABLE									FUSE AND HINGE PLATE DATA TABLE							BOLT KEEPER PLATE DATA TABLE					
	A	B	C	D	E	T_1	T_2	W	R	BOLT DIA.	a	b	c	d	g	g/2	BOLT DIA.	A	B	C	D	E
AB	7"	2¾"	2"	4"	1½"	1"	¾"	5/16"	15/32"	⅞"	5½"	⅜"	1¼"	1"	2¾"	1⅜"	⅞"	7"	21¼"	¾"	1½"	3"
AC	7"	2¾"	2"	4"	1½"	1⅛"	¾"	5/16"	15/32"	⅞"	5½"	7/16"	1¼"	1"	2¾"	1⅜"	⅞"	7"	21⅜"	¾"	1½"	3"
AD	7"	2¾"	2"	4"	1½"	1⅛"	¾"	5/16"	17/32"	1"	6¾"	7/16"	1 7/16"	1⅛"	3½"	1¾"	1"	7"	19½"	¾"	1½"	3"
AE	7"	2¾"	2"	4"	1½"	1⅛"	¾"	5/16"	17/32"	1"	6¾"	½"	1 7/16"	1⅛"	3½"	1¾"	1"	7"	21½"	¾"	1½"	3"
AF	7"	2¾"	2"	4"	1½"	1¼"	¾"	5/16"	19/32"	1"	7"	½"	1 7/16"	1⅛"	3½"	1¾"	1⅛"	7"	23⅜"	¾"	1½"	3"
AG	8"	3"	2¼"	4½"	1¾"	1¼"	¾"	⅜"	19/32"	1"	6½"	7/16"	1 7/16"	1⅛"	3½"	1¾"	1⅛"	8"	26⅝"	¾"	1¾"	3½"
AH	7"	2¾"	2"	4"	1½"	1⅛"	¾"	5/16"	17/32"	⅞"	6"	7/16"	1¼"	1"	3½"	1¾"	1"	7"	23¼"	¾"	1½"	3"
AJ	7"	2¾"	2"	4"	1½"	1⅛"	¾"	5/16"	17/32"	⅞"	6"	7/16"	1¼"	1"	3½"	1¾"	1"	7"	23¼"	¾"	1½"	3"
AK	7"	2¾"	2"	4"	1½"	1¼"	¾"	5/16"	17/32"	⅞"	6"	½"	1¼"	1"	3½"	1¾"	1"	7"	23⅜"	¾"	1½"	3"
AL	7"	2¾"	2"	4"	1½"	1⅛"	¾"	5/16"	17/32"	⅞"	5½"	7/16"	1¼"	1"	2¾"	1⅜"	1"	7"	21⅜"	¾"	1½"	3"
AM	7"	2¾"	2"	4"	1½"	1⅛"	¾"	5/16"	17/32"	⅞"	6"	7/16"	1¼"	1"	3½"	1¾"	1"	7"	23¼"	¾"	1½"	3"
AN	7"	2¾"	2"	4"	1½"	1¼"	¾"	5/16"	17/32"	⅞"	6"	½"	1¼"	1"	3½"	1¾"	1"	7"	23⅜"	¾"	1½"	3"
AO	8"	3"	2¼"	4½"	1¾"	1¼"	¾"	⅜"	19/32"	1⅛"	6½"	7/16"	1⅝"	1¼"	3½"	1¾"	1⅛"	8"	26⅝"	¾"	1¾"	3½"
AP	7"	2¾"	2"	4"	1¾"	1⅛"	¾"	5/16"	17/32"	⅞"	7"	½"	1¼"	1"	3½"	1¾"	1"	7"	21½"	¾"	1½"	3"
AQ	7"	2¾"	2"	4"	1½"	1⅛"	¾"	5/16"	17/32"	⅞"	6"	7/16"	1¼"	1"	3½"	1¾"	1"	7"	23¼"	¾"	1½"	3"
AR	7"	2¾"	2"	4"	1½"	1¼"	¾"	5/16"	17/32"	1"	6"	½"	1 7/16"	1⅛"	3½"	1¾"	1"	7"	23⅜"	¾"	1½"	3"
AS	8"	3"	2¼"	4½"	1¾"	1¼"	¾"	⅜"	17/32"	1"	6½"	7/16"	1 7/16"	1⅛"	3½"	1¾"	1"	8"	26⅝"	¾"	1¾"	3½"
AT	8"	3"	2¼"	4½"	1¾"	1¼"	¾"	⅜"	17/32"	1"	6½"	7/16"	1 7/16"	1⅛"	3½"	1¾"	1"	8"	26⅝"	¾"	1¾"	3½"
AU	7"	2¾"	2"	4"	1½"	1¼"	¾"	5/16"	19/32"	1⅛"	6"	½"	1⅝"	1¼"	3½"	1¾"	1⅛"	7"	23⅜"	¾"	1½"	3"
AV	8"	3"	2¼"	4½"	1¾"	1¼"	¾"	⅜"	19/32"	1⅛"	6½"	7/16"	1⅝"	1¼"	3½"	1¾"	1⅛"	8"	26⅝"	¾"	1¾"	3½"
AW	7"	2¾"	2"	4"	1½"	1⅛"	¾"	5/16"	17/32"	1"	6"	7/16"	1 7/16"	1⅛"	3½"	1¾"	1"	7"	23¼"	¾"	1½"	3"
AX	7"	2¾"	2"	4"	1½"	1⅛"	¾"	5/16"	17/32"	1"	6"	½"	1 7/16"	1⅛"	3½"	1¾"	1"	7"	23⅜"	¾"	1½"	3"
AY	7"	2¾"	2"	4"	1½"	1⅛"	¾"	⅜"	17/32"	1"	6½"	7/16"	1 7/16"	1⅛"	3½"	1¾"	1"	7"	26⅝"	¾"	1½"	3"
AZ	8"	3"	2¼"	4½"	1¾"	1¼"	¾"	⅜"	17/32"	1"	6½"	7/16"	1 7/16"	1⅛"	3½"	1¾"	1"	8"	26⅝"	¾"	1¾"	3½"
BC	8"	3"	2¼"	4½"	1¾"	1¼"	¾"	⅜"	17/32"	1"	6½"	7/16"	1 7/16"	1⅛"	3½"	1¾"	1"	8"	26⅝"	¾"	1¾"	3½"
BD	8"	3"	2¼"	4½"	1¾"	1¼"	¾"	⅜"	19/32"	1⅛"	6½"	7/16"	1⅝"	1¼"	3½"	1¾"	1⅛"	8"	26⅝"	¾"	1¾"	3½"

SPECIFICATION REFERENCE	INTERSTATE SIGN STRUCTURE	VDOT ROAD AND BRIDGE STANDARDS
700	INSTALLATION DETAILS VIRGINIA DEPARTMENT OF TRANSPORTATION	REVISION DATE SHEET 10 OF 10 1323.19

OSS-1

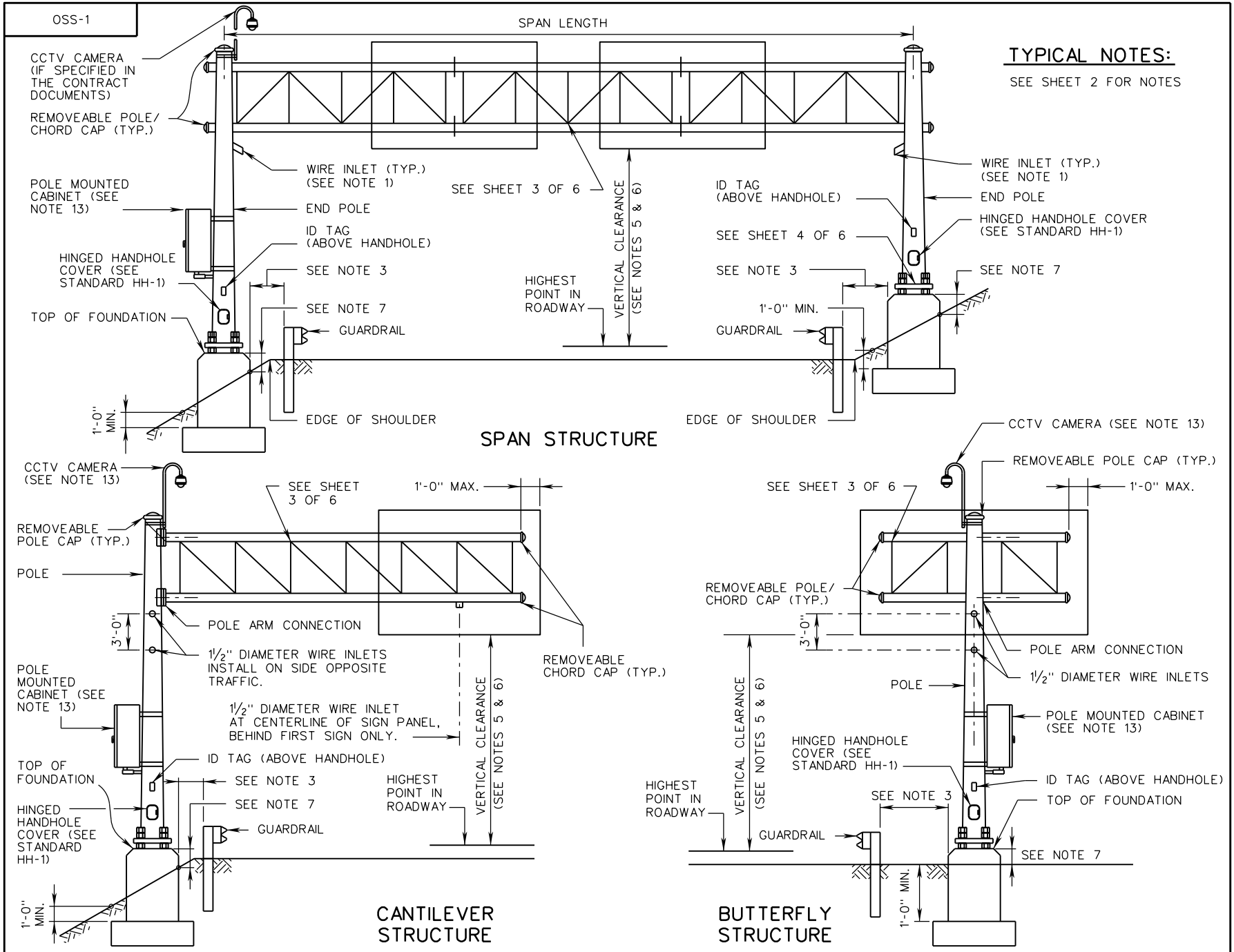

TYPICAL NOTES:

SEE SHEET 2 FOR NOTES

VDOT ROAD AND BRIDGE STANDARDS	A COPY OF THE ORIGINAL SEALED AND SIGNED DRAWING IS ON FILE IN THE CENTRAL OFFICE.	SPECIFICATION REFERENCE
SHEET 1 OF 7	# OVERHEAD SIGN STRUCTURE	700
1324.10	TYPICAL DETAILS	
REVISION DATE 04/19	VIRGINIA DEPARTMENT OF TRANSPORTATION	

OSS-1

TYPICAL NOTES:

SEE SHEET 1 FOR DETAILS

1. 1 ½" DIAMETER WIRE INLETS SHALL BE PROVIDED AT THE FOLLOWING LOCATIONS:
   A. ON SPAN STRUCTURES ON THE FRONT LEG OF END POLE 12" BELOW BOTTOM CHORD.
   B. ON CANTILEVER AND BUTTERFLY STRUCTURES ON POLE 12" BELOW BOTTOM CHORD.
   C. ON SPAN STRUCTURES ON THE UNDERSIDE OF THE BOTTOM CHORD AT CENTERLINE BEHIND FIRST SIGN PANEL FROM EACH END POLE.
   D. ON CANTILEVER AND BUTTERFLY STRUCTURES ON THE UNDERSIDE OF THE BOTTOM CHORD AT CENTERLINE BEHIND FIRST SIGN PANEL FROM POLE.
2. ALL UNUSED WIRE INLETS SHALL BE CAPPED WATER TIGHT.
3. OVERHEAD SIGN STRUCTURE POLES SHALL BE LOCATED SUCH THAT THE NEAR SIDE EDGE OF THE FOUNDATION IS OUTSIDE OF THE GUARDRAIL DEFLECTION DISTANCE.
4. NO MORTAR, GROUT, OR CONCRETE SHALL BE PLACED BETWEEN BOTTOM OF BASE PLATE AND TOP OF PEDESTAL.
5. VERTICAL CLEARANCE FOR OVERHEAD SIGN STRUCTURES SHALL BE AS FOLLOWS:
   A. CANTILEVER OR SPAN SIGN STRUCTURE:
      17'-6" FROM BOTTOM OF LOWEST LUMINAIRE ASSEMBLY (OR BOTTOM OF SIGN PANEL IF NO SIGN LIGHTING IS PRESENT) TO HIGHEST POINT OF THE TRAVEL LANES OR SHOULDER.
   B. BUTTERFLY SIGN STRUCTURE THAT OVERHANGS THE TRAVEL LANE, SHOULDER OR MEDIAN:
      17'-6" FROM BOTTOM OF LUMINAIRE ASSEMBLY (OR BOTTOM OF SIGN PANEL IF NO SIGN LIGHTING IS PRESENT) TO THE HIGHEST POINT OF THE PORTION OF THE ROAD SURFACE OR MEDIAN THAT IS UNDERNEATH THAT SIGN.
   C. BUTTERFLY SIGN STRUCTURE THAT DOES NOT OVERHANG THE TRAVEL LANE, SHOULDER OR MEDIAN:
      14'-6" FROM BOTTOM OF LUMINAIRE ASSEMBLY (OR BOTTOM OF SIGN PANEL IF NO SIGN LIGHTING IS PRESENT) TO THE HIGHEST POINT OF THE ROAD SURFACE FOR THE TRAVEL LANES OR SHOULDER IN THAT DIRECTION OF TRAVEL.
6. ALL SIGN PANELS SHALL BE A MAXIMUM OF 21'-0" FROM THE BOTTOM OF SIGN PANELS TO THE HIGHEST POINT OF THE TRAVEL LANE OR SHOULDER FOR THAT DIRECTION OF TRAVEL.
7. TOP OF FOUNDATIONS SHALL BE 2'-0" MINIMUM ABOVE FINISHED GRADE. FOR FOUNDATIONS ADJACENT OR WITHIN A SIDEWALK, TOP OF FOUNDATIONS SHALL BE A MINIMUM OF 3" ABOVE FINISHED GRADE.
8. FOUNDATIONS SHALL NOT BE LOCATED IN THE BASE OR SIDES OF DRAINAGE DITCHES.
9. EACH HORIZONTAL CHORD SHALL BE ATTACHED TO A POLE.
10. SEE STANDARD HH-1 FOR HANDHOLE DETAILS.
11. SEE STANDARD VS-1 FOR VARMINT SCREEN DETAILS.
12. A "J" HOOK FOR WIRE SUPPORT SHALL BE PLACED NEAR ALL HANDHOLES THAT ARE LOCATED MORE THAN 4 FEET UP THE STRUCTURE.
13. ALL SIGN STRUCTURES SHALL BE DESIGNED TO SUPPORT THE FUTURE ADDITION OF ONE CCTV CAMERA AT THE TOP CORNER OF ONE COLUMN, AND THE FUTURE ADDITION OF ONE 500-POUND POLE MOUNTED CABINET ATTACHED TO ONE COLUMN, UNLESS SUCH DEVICES ARE ALREADY REQUIRED IN THE CONTRACT DOCUMENTS. SEE STANDARD MP-3 FOR CCTV CAMERA DEAD LOAD AND SURFACE AREA REQUIREMENTS.

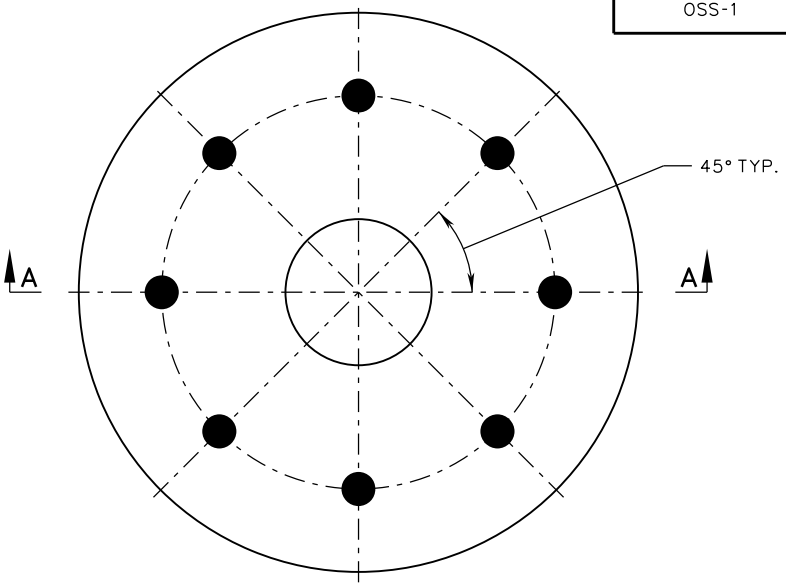

PLAN FOR SINGLE POLE SUPPORT

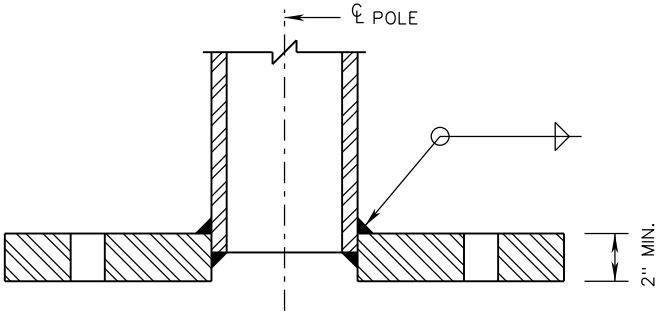

SECTION A-A

TYPICAL SOCKETED BASE PLATE CONNECTION

NOTES:

1. ALL OVERHEAD SIGN STRUCTURES HAVING A SINGLE POLE, OR A SINGLE POLE AT EACH END, SHALL HAVE A MINIMUM OF EIGHT (8) TWO-INCH DIAMETER (MINIMUM) ANCHOR BOLTS. STRUCTURES WITH MORE THAN ONE POLE AT EACH END SHALL HAVE A MINIMUM OF FOUR (4) TWO-INCH DIAMETER (MINIMUM) ANCHOR BOLTS PER POLE.
2. ALL END POLE COLUMNS SHALL BE JOINED TO THE BASE PLATE USING A SOCKETED CONNECTION OR FULL PENETRATION GROOVE WELD WITH A BACKING RING.
3. SEE STANDARD AB-1 FOR TYPICAL ANCHOR BOLT DETAILS.

SPECIFICATION REFERENCE	A COPY OF THE ORIGINAL SEALED AND SIGNED DRAWING IS ON FILE IN THE CENTRAL OFFICE.	VDOT ROAD AND BRIDGE STANDARDS	
700	OVERHEAD SIGN STRUCTURE TYPICAL NOTES AND SOCKETED BASE PLATE CONNECTION VIRGINIA DEPARTMENT OF TRANSPORTATION	REVISION DATE 04/19	SHEET 2 OF 7 1324.11

OSS-1

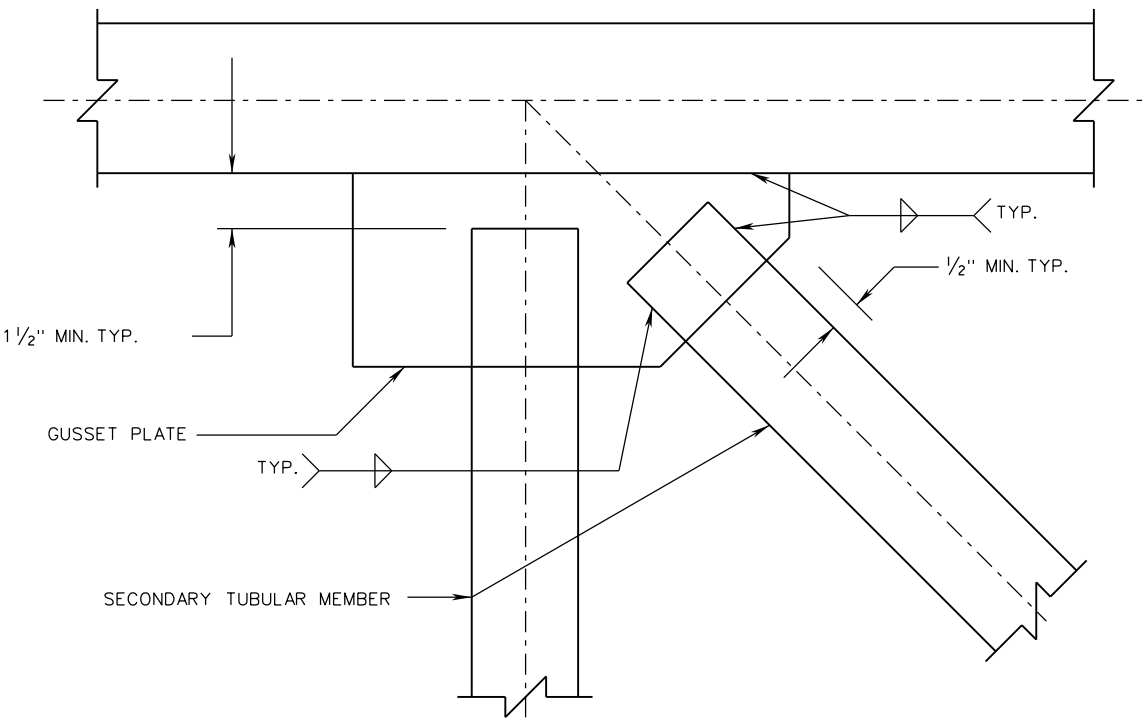

TYPICAL GUSSET PLATE CONNECTION

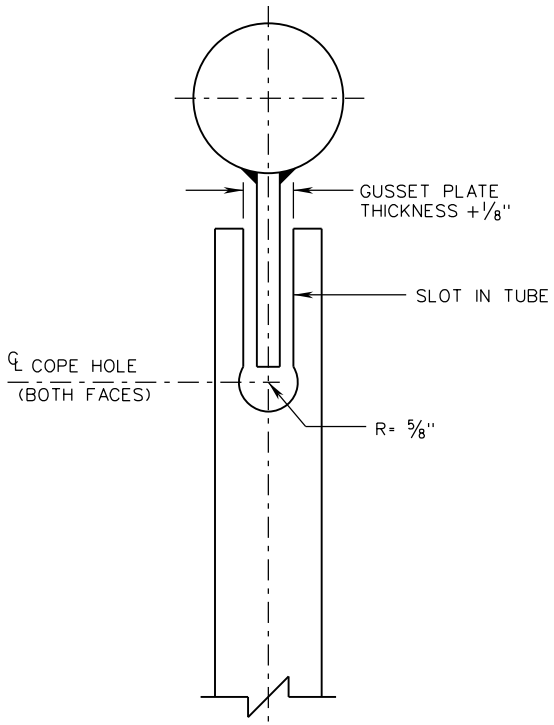

SECTION VIEW

NOTES:

1. ALL SECONDARY MEMBERS IN BOTH TUBULAR AND NON-TUBULAR STUCTURES IN THE OVERHEAD TRUSS AND THE END POLE SUPPORTS SHALL BEJOINED TO PRIMARY MEMBERS USING A GUSSET CONNECTION PLATE.
2. CONTRACTOR SHALL SPECIFY THE WIDTH, LENGTH, AND THICKNESS OF GUSSET PLATE.
3. CONTRACTOR SHALL SPECIFY THE MINIMUM WELD SIZE AND LENGTH OF WELD.
4. COPE HOLES TO BE PROVIDED AT BOTH ENDS AND BOTH FACES OF ALL SECONDARY MEMBER CONNECTIONS.

VDOT ROAD AND BRIDGE STANDARDS	A COPY OF THE ORIGINAL SEALED AND SIGNED DRAWING IS ON FILE IN THE CENTRAL OFFICE.		SPECIFICATION REFERENCE
SHEET 3 OF 7	OVERHEAD SIGN STRUCTURE	REVISION DATE 09/18	700
1324.12	GUSSET PLATE CONNECTION		
	VIRGINIA DEPARTMENT OF TRANSPORTATION		

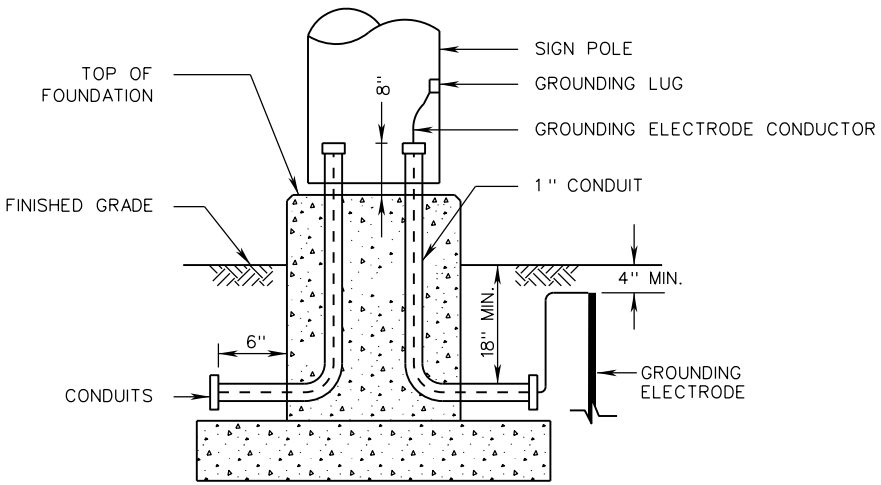

TYPICAL SIGN FOOTING DETAIL WITH CONDUIT

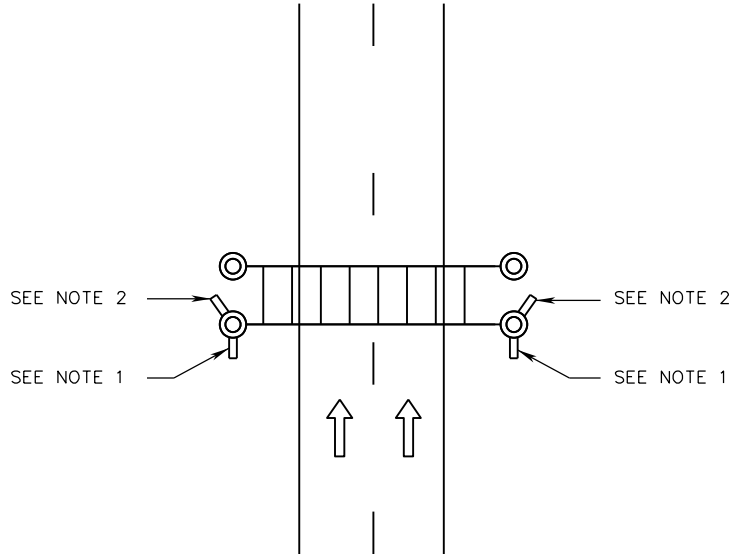

LOCATION OF FUTURE USE CONDUITS FOR DOUBLE END POLE STRUCTURES

NOTES:

1. FUTURE USE CONDUITS PLACED PARALLEL TO THE ROADWAY.
2. FUTURE USE CONDUITS PLACED AT AN ANGLE TO MISS THE BACK FOUNDATION OR ANCHOR BOLTS IN A SPREAD FOOTING FOUNDATION.
3. THE TYPE, SIZE, NUMBER AND ORIENTATION OF CONDUITS ENTERING AND EXITING FOOTINGS MAY VARY PER SIGN LOCATION.
4. IN ADDITION TO THE CONDUITS SPECIFIED ON THE PLANS, ONE - 1" CONDUIT REQUIRED FOR GROUND WIRE AND TWO - 2" PVC HEAVY WALL CONDUITS REQUIRED FOR FUTURE USE. FUTURE USE CONDUITS SHALL BE STUBBED OUT AND CAPPED. FUTURE USE CONDUITS SHALL BE ORIENTED TO RUN PARALLEL TO THE ROADWAY. FOR LOCATION OF FUTURE USE CONDUITS IN FOUNDATIONS FOR DOUBLE END POLE STRUCTURES, SEE DRAWING AT RIGHT.
5. EACH FOUNDATION SHALL BE PERMANENTLY MARKED TO INDICATE ALL SIDES FROM WHICH CONDUITS PASS. THIS MARK SHALL BE MADE WITH A TROWEL WHEN FINISHING THE CONCRETE AND SHALL BE 1/4" DEEP AND 4" TO 6" LONG. LOCATIONS OF EMPTY CONDUITS SHALL HAVE AN ADDITIONAL 2" LONG MARK MADE PERPENDICULAR TO AND CENTERED ON THIS MARK.
6. NO MORTAR, GROUT, OR CONCRETE SHALL BE PLACED BETWEEN BOTTOM OF BASE PLATE AND TOP OF FOUNDATION.

SPECIFICATION REFERENCE	A COPY OF THE ORIGINAL SEALED AND SIGNED DRAWING IS ON FILE IN THE CENTRAL OFFICE.	VDOT ROAD AND BRIDGE STANDARDS	
700	OVERHEAD SIGN STRUCTURE CONDUIT DETAILS VIRGINIA DEPARTMENT OF TRANSPORTATION	REVISION DATE 09/18	SHEET 4 OF 7 1324.13

OSS-1

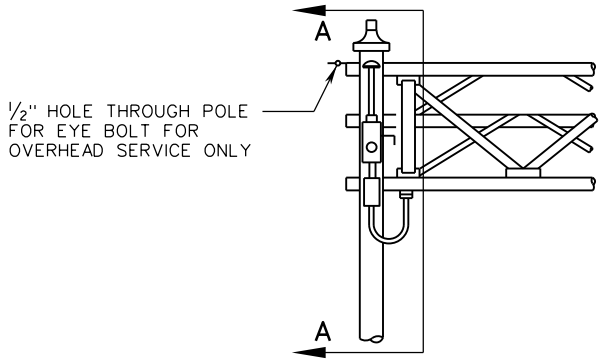

FRONT VIEW

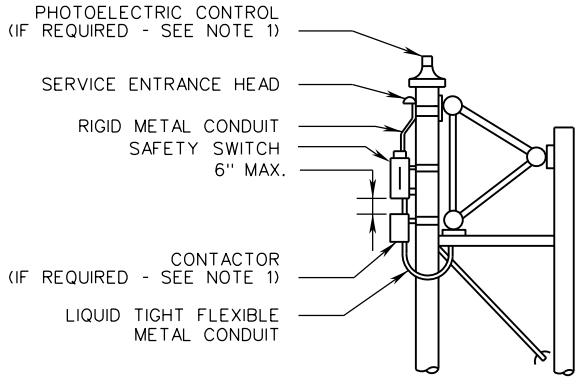

SECTION A-A

SPAN SIGN STRUCTURE

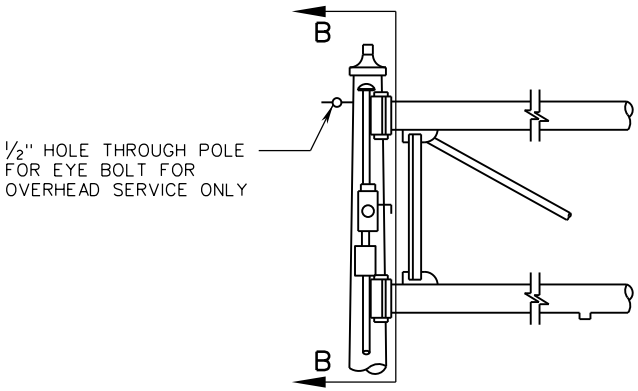

FRONT VIEW

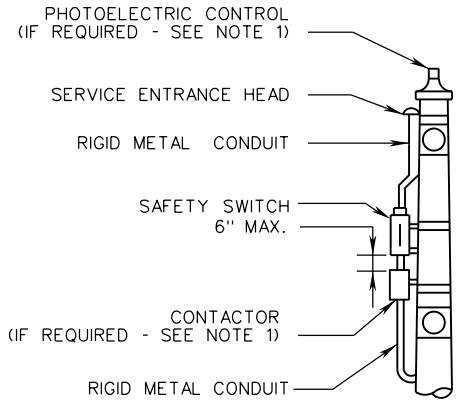

SECTION B-B

CANTILEVER SIGN STRUCTURE

NOTES:

1. A SAFETY SWITCH SHALL BE INSTALLED ON ALL SIGN STRUCTURES REQUIRING ELECTRICAL POWER. ELECTRICAL SERVICE FOR SIGN STRUCTURES NOT CONTROLLED BY A CONTROL CENTER SHALL HAVE A PHOTOCELL AND A PHOTOCELL CONTROLLED CONTACTOR TO CONTROL THE ELECTRICAL POWER TO LUMINAIRES. THE CONTACTOR SHALL BE IN A NEMA 3R ENCLOSURE.

2. ALL CONDUIT LOCATED IN OR ON OVERHEAD SIGN STRUCTURE SHALL BE ¾" MINIMUM.

VDOT ROAD AND BRIDGE STANDARDS		A COPY OF THE ORIGINAL SEALED AND SIGNED DRAWING IS ON FILE IN THE CENTRAL OFFICE.	SPECIFICATION REFERENCE
SHEET 5 OF 7	REVISION DATE	OVERHEAD SIGN STRUCTURE ELECTRICAL DETAILS FOR SIGN LIGHTING	700
1324.14	09/18	VIRGINIA DEPARTMENT OF TRANSPORTATION	

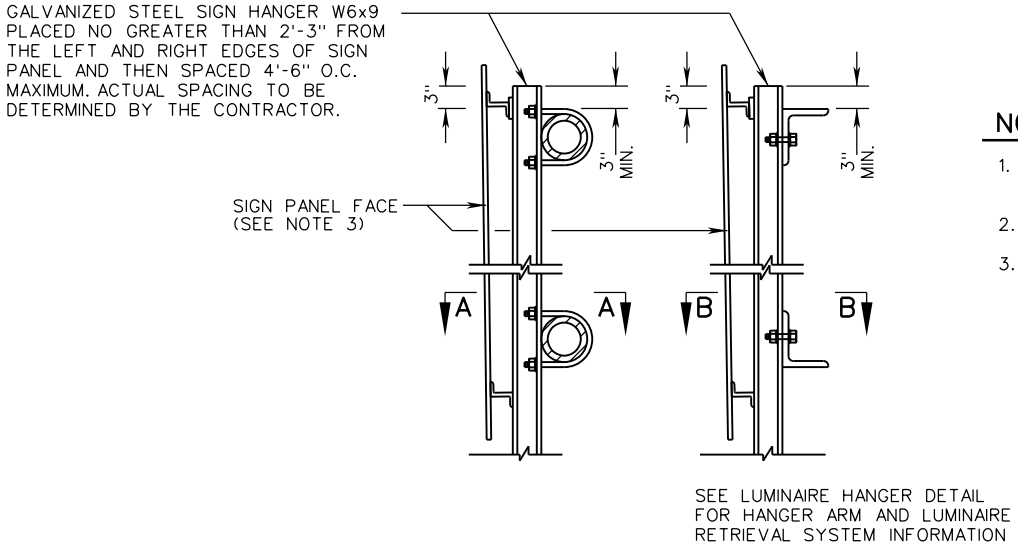

ROUND CHORD DETAIL

ANGLE CHORD DETAIL

NOTES:

1. ISOLATION WASHER OR GASKET SHALL BE PROVIDED BETWEEN ALUMINUM AND STEEL SURFACES.
2. SIGN PANELS SHALL BE STANDARD SPD-1 OR SPD-2.
3. TOP OF SIGN SHALL BE TILTED TOWARDS TRAFFIC USING SHIMS, WELDING A SHORT PIECE OF W6x9 OR WT3X4.5 TO THE VERTICAL SIGN HANGER, OR BY AN OTHER APPROVED METHOD SO THAT THE SIGN FACE IS APPROXIMATELY 3° FROM VERTICAL.

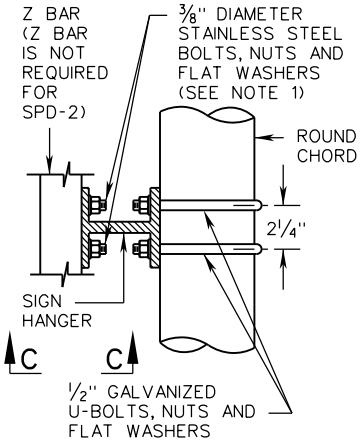

SECTION A-A
ROUND CHORD

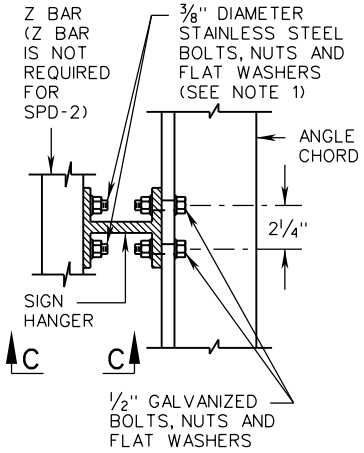

SECTION B-B
ANGLE CHORD

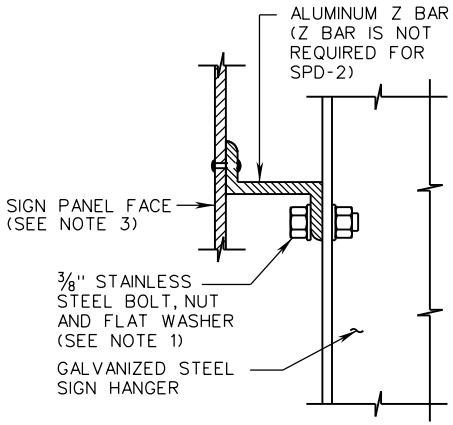

SECTION C-C

SPECIFICATION REFERENCE	A COPY OF THE ORIGINAL SEALED AND SIGNED DRAWING IS ON FILE IN THE CENTRAL OFFICE.	VDOT ROAD AND BRIDGE STANDARDS	
700	OVERHEAD SIGN STRUCTURE SIGN HANGER DETAILS VIRGINIA DEPARTMENT OF TRANSPORTATION	REVISION DATE 09/18	SHEET 6 OF 7 1324.15

OSS-1

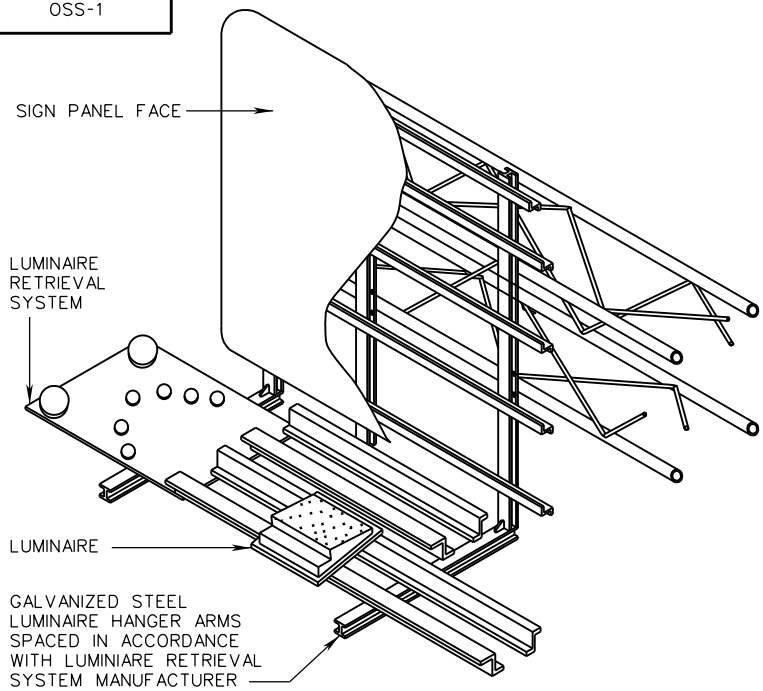

SIGN HANGER ERECTION DETAIL
(WITH LUMINAIRE RETRIEVAL SYSTEM)

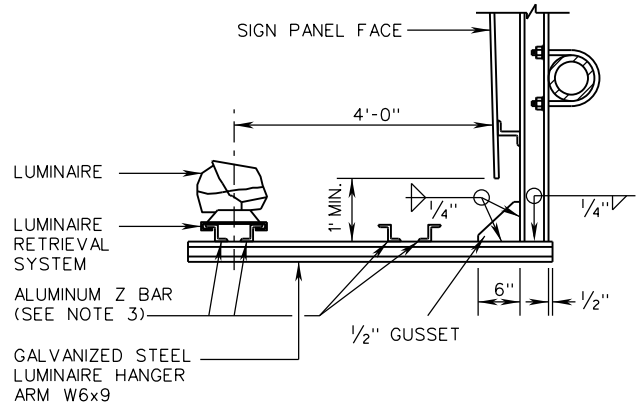

LUMINAIRE HANGER DETAIL
(WITH LUMINAIRE RETRIEVAL SYSTEM)

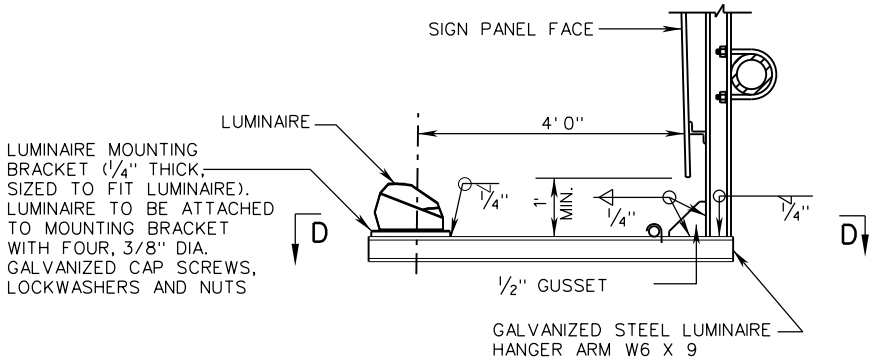

LUMINAIRE HANGER DETAIL
(WITHOUT LUMINAIRE RETRIEVAL SYSTEM)

NOTES:

1. LUMINAIRE RETRIEVAL SYSTEM, WHERE REQUIRED IN THE CONTRACT DOCUMENTS, SHALL BE DESIGNED FOR THE NUMBER OF LUMINAIRES INDICATED IN THE CONTRACT DOCUMENTS. SPACING OF HANGERS USED TO SUPPORT THE RETRIEVAL SYSTEM SHALL BE IN ACCORDANCE WITH MANUFACTURER'S RECOMMENDATIONS. TURNTABLE END SHALL BE OF SUFFICIENT LENGTH TO ALIGN WITH THE VERTICAL EDGE OF THE OUTSIDE PAVED SHOULDER (+6") OR SHALL BE EXTENDED 5 FEET BEYOND THE VERTICAL EDGE (+6") OF THE OUTERMOST SIGN LUMINAIRE, WHICHEVER IS GREATER. THE OPPOSITE END OF THE RETRIEVAL SYSTEM SHALL EXTEND A MINIMUM OF 6 INCHES PAST THE OUTERMOST VERTICAL EDGE OF THE SIGN HANGER ARM.
2. LUMINAIRES, WHERE REQUIRED IN THE CONTRACT DOCUMENTS, SHALL BE INSTALLED AND AIMED AS PER MANUFACTURER'S RECOMMENDATIONS.
3. ISOLATION WASHER OR GASKET SHALL BE PROVIDED BETWEEN ALUMINUM AND STEEL SURFACES.

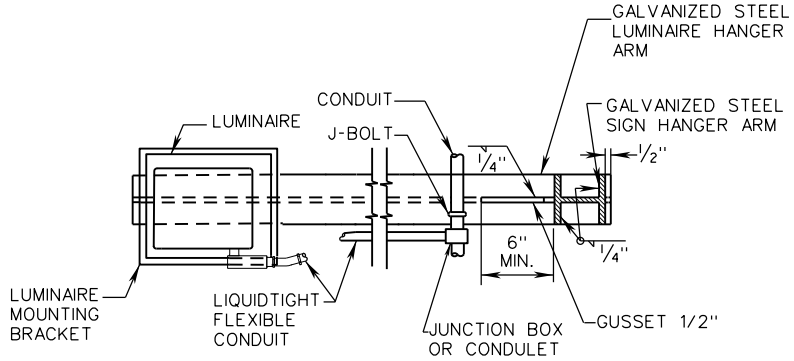

SECTION D-D

VDOT ROAD AND BRIDGE STANDARDS	A COPY OF THE ORIGINAL SEALED AND SIGNED DRAWING IS ON FILE IN THE CENTRAL OFFICE.		SPECIFICATION REFERENCE
SHEET 7 OF 7	OVERHEAD SIGN STRUCTURE		
1324.16	LUMINAIRE HANGER DETAILS	REVISION DATE 09/18	700
	VIRGINIA DEPARTMENT OF TRANSPORTATION		

SPD-1

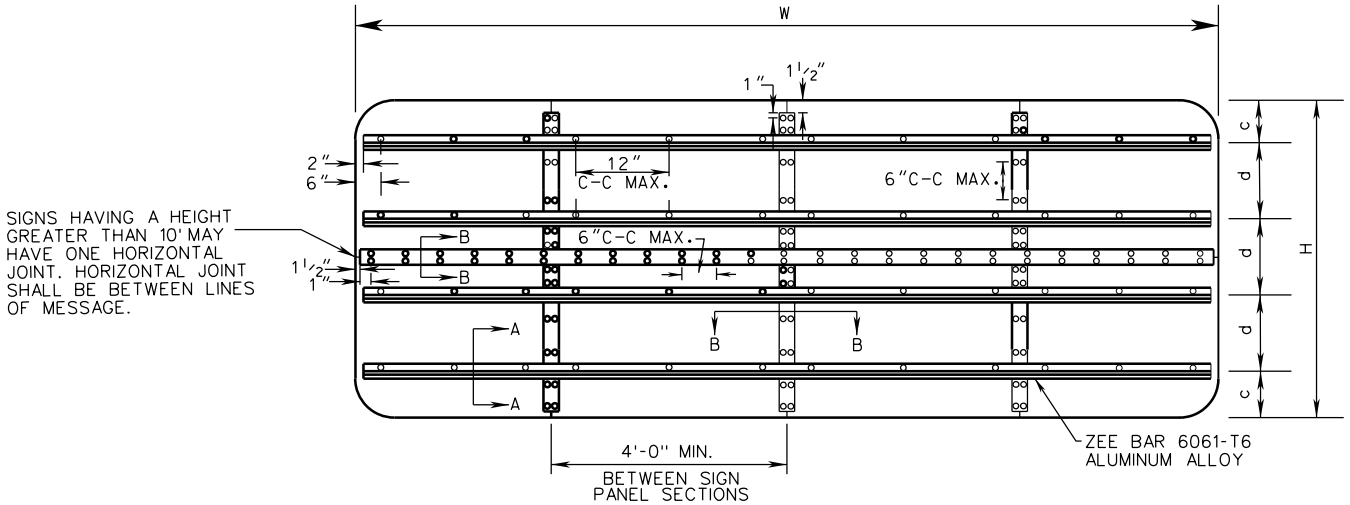

NOTE:
DIMENSIONS "C" AND "D" ARE MEASURED TO CENTER OF RIVET OR CARRIAGE BOLT

SECTION A-A

ALL INSTALLATIONS EXCEPT TOP AND BOTTOM ZEE BARS ON OVERHEAD SIGNS

3/16" DIAMETER RIVET - RIVETS SHALL BE DOME HEAD, BREAK MANDREL, BLIND RIVETS CONFORMING TO INDUSTRIAL FASTENERS INSTITUTE STANDARD IFI-114, STYLE 1, GRADES 10 OR 11 EXCEPT THAT THE MINIMUM ULTIMATE TENSILE STRENGTH SHALL BE 360 POUNDS. RIVETS SHALL HAVE A GRIP RANGE ACCOMMODATING THE COMBINED THICKNESS OF THE SIGN PANEL AND ZEE BAR AND SHALL BE INSTALLED IN ACCORDANCE WITH THE MANUFACTURER'S RECOMMENDATIONS.

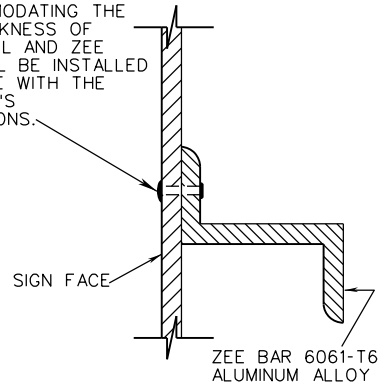

TOP AND BOTTOM ZEE BAR INSTALLATION ON OVERHEAD SIGNS

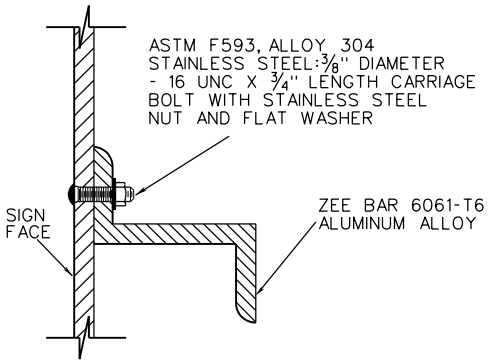

SECTION B-B

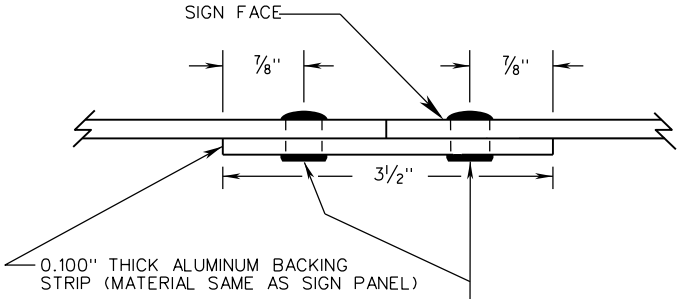

RIVET (SAME AS USED FOR CONNECTING SIGN TO ZEE BAR). IN LIEU OF USING RIVETS, TAPE EQUAL TO 3M'S VHB DOUBLE COATED ACRYLIC FOAM TAPE MAY BE USED EXCEPT ON HORIZONTAL BACKING STRIP. TAPE SHALL BE INSTALLED IN ACCORDANCE WITH THE MANUFACTURER'S RECOMMENDATIONS.

SPECIFICATION REFERENCE	A COPY OF THE ORIGINAL SEALED AND SIGNED DRAWING IS ON FILE IN THE CENTRAL OFFICE.	VDOT ROAD AND BRIDGE STANDARDS	
701	SIGN PANEL DESIGN VIRGINIA DEPARTMENT OF TRANSPORTATION	REVISION DATE 09/18	SHEET 1 OF 2 1325.10

SPD-1

SIGN PANEL DIMENSIONS				ZEE BAR
W	H	c ✳	d ✳	NO.
12′	4′	14″	20″	2
11′	5′	16″	28″	2
10′	6′	12″	4′-0″	2
12′	6′	12″	4′-0″	2
14′	6′	12″	4′-0″	2
16′	6′	12″	4′-0″	2
18′	6′	12″	4′-0″	2
20′	6′	12″	4′-0″	2
22′	6′	12″	4′-0″	2
24′	6′	12″	4′-0″	2
26′	6′	12″	4′-0″	2
28′	6′	12″	4′-0″	2
30′	6′	12″	4′-0″	2
10′	8′	12″	3′-0″	3
12′	8′	12″	3′-0″	3
14′	8′	12″	3′-0″	3
16′	8′	12″	3′-0″	3
18′	8′	12″	3′-0″	3
20′	8′	12″	3′-0″	3
22′	8′	12″	3′-0″	3
24′	8′	12″	3′-0″	3
26′	8′	12″	3′-0″	3
28′	8′	12″	3′-0″	3
30′	8′	12″	3′-0″	3
10′	10′	18″	3′-6″	3
12′	10′	18″	3′-6″	3
14′	10′	18″	3′-6″	3
16′	10′	18″	3′-6″	3
18′	10′	18″	3′-6″	3
20′	10′	18″	3′-6″	3
22′	10′	18″	3′-6″	3
24′	10′	18″	3′-6″	3

SIGN PANEL DIMENSIONS				ZEE BAR
W	H	c ✳	d ✳	NO.
26′	10′	18″	3′-6″	3
28′	10′	18″	3′-6″	3
30′	10′	18″	3′-6″	3
10′	9′	18″	3′-0″	3
12′	9′	18″	3′-0″	3
14′	9′	18″	3′-0″	3
16′	9′	18″	3′-0″	3
18′	9′	18″	3′-0″	3
20′	9′	18″	3′-0″	3
22′	9′	18″	3′-0″	3
24′	9′	18″	3′-0″	3
26′	9′	18″	3′-0″	3
28′	9′	18″	3′-0″	3
30′	9′	18″	3′-0″	3
12′	12′	18″	3′-0″	4
14′	12′	18″	3′-0″	4
16′	12′	18″	3′-0″	4
18′	12′	18″	3′-0″	4
20′	12′	21″	4′-3″	3
22′	12′	21″	4′-3″	3
24′	12′	21″	4′-3″	3
26′	12′	21″	4′-3″	3
28′	12′	21″	4′-3″	3
30′	12′	21″	4′-3″	3
14′	14′	18″	3′-8″	4
16′	14′	18″	3′-8″	4
18′	14′	18″	3′-8″	4
20′	14′	18″	3′-8″	4
22′	14′	18″	3′-8″	4
24′	14′	18″	3′-8″	4
26′	14′	18″	3′-8″	4
28′	14′	18″	3′-8″	4

SIGN PANEL DIMENSIONS				ZEE BAR
W	H	c ✳	d ✳	NO.
30′	14′	18″	3′-8″	4
16′	16′	18″	3′-3″	5
18′	16′	18″	3′-3″	5
20′	16′	18″	3′-3″	5
22′	16′	18″	3′-3″	5
24′	16′	18″	3′-3″	5
26′	16′	18″	3′-3″	5
28′	16′	18″	3′-3″	5
30′	16′	18″	3′-3″	5
VARIES	2′-6′	9″	12″	2

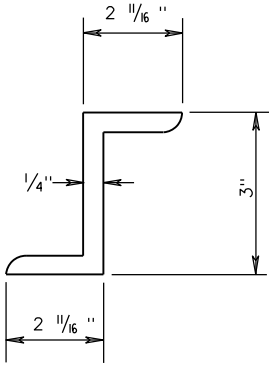

ZEE BAR

✳ DIMENSIONS "c" AND "d" ARE MEASURED TO CENTER OF RIVET OR CARRIAGE BOLT

VDOT
ROAD AND BRIDGE STANDARDS

SHEET 2 OF 2
1325.11

REVISION DATE
09/18

A COPY OF THE ORIGINAL SEALED AND SIGNED DRAWING IS ON FILE IN THE CENTRAL OFFICE.

SIGN PANEL DESIGN

VIRGINIA DEPARTMENT OF TRANSPORTATION

SPECIFICATION REFERENCE
701

SPD-2

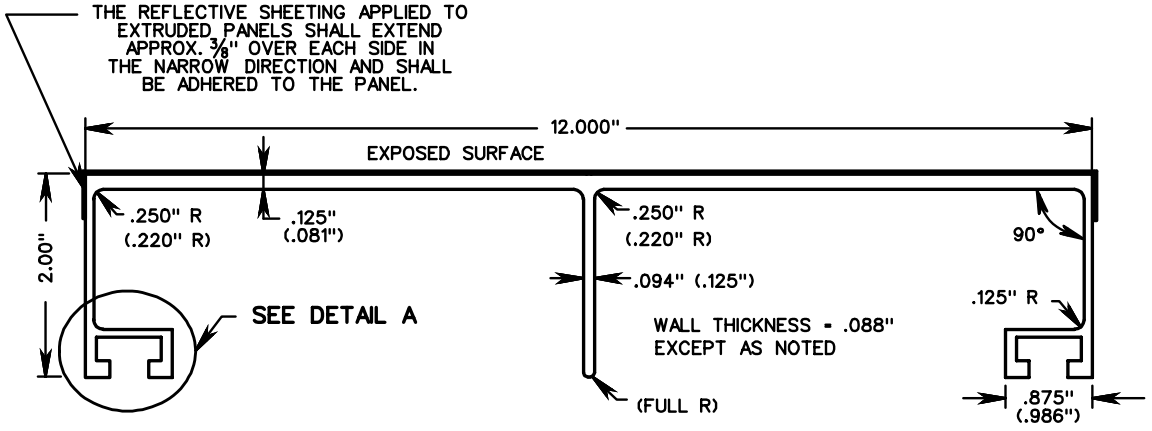

FULL PANEL

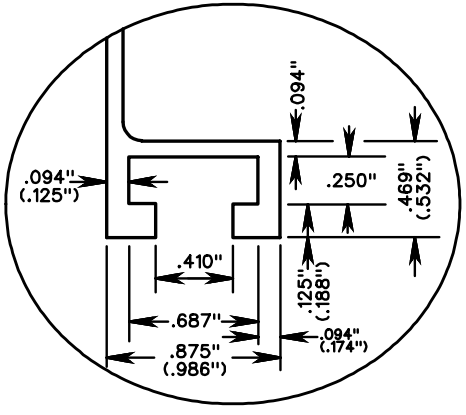

DETAIL A

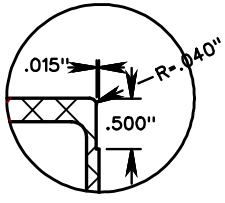

DETAIL B

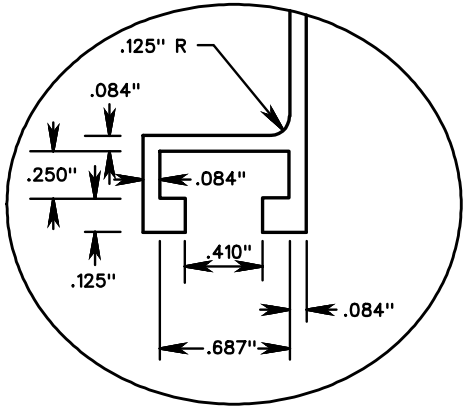

DETAIL C

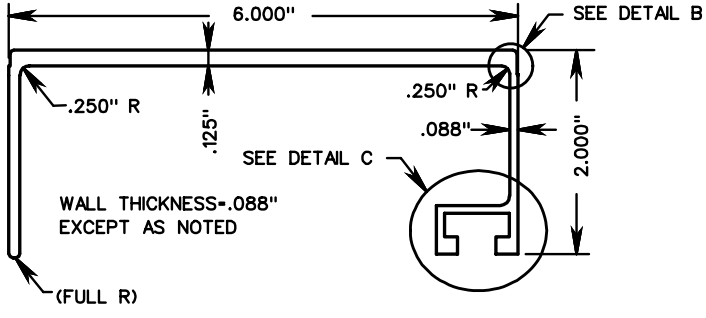

HALF PANEL

NOTES:

1. ALUMINUM PANELS MAY HAVE SQUARE CORNERS OR NOTCHED CORNERS AS SHOWN. NO OTHER TYPE CORNERS ARE ACCEPTABLE.
2. ALTERNATE DIMENSIONS INDICATED IN PARENTHESES ARE ACCEPTABLE.

SPECIFICATION REFERENCE	EXTRUDED SIGN PANEL DESIGN	VDOT ROAD AND BRIDGE STANDARDS
701	VIRGINIA DEPARTMENT OF TRANSPORTATION	REVISION DATE / SHEET 1 OF 2 / 1325.20

SPD-2

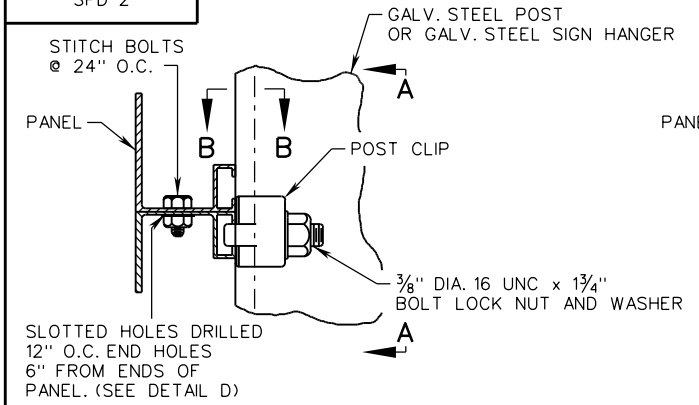

SIGN PANEL ASSEMBLY

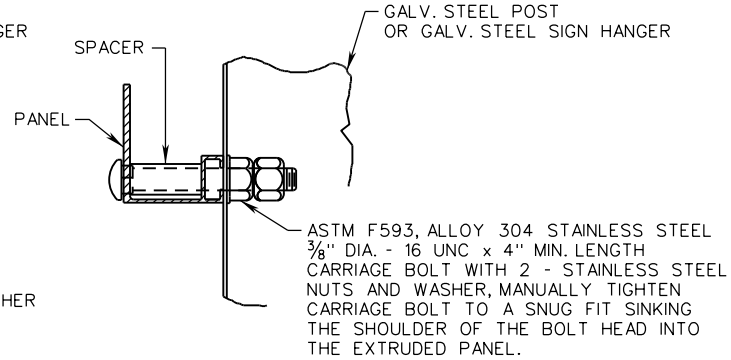

DETAIL E

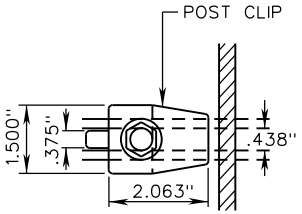

SECTION A-A

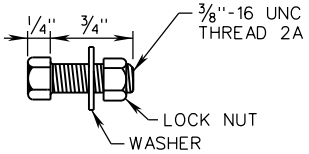

STITCH BOLT (TYP.)

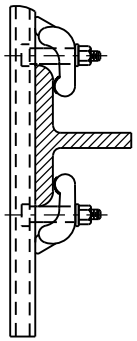

SECTION B-B

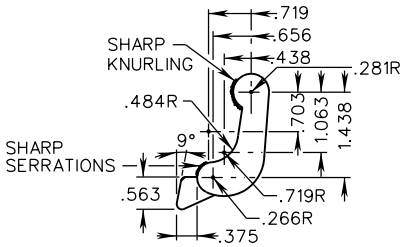

POST CLIP (TYP.)

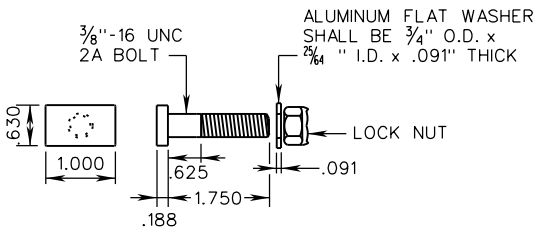

POST CLIP BOLT (TYP.)

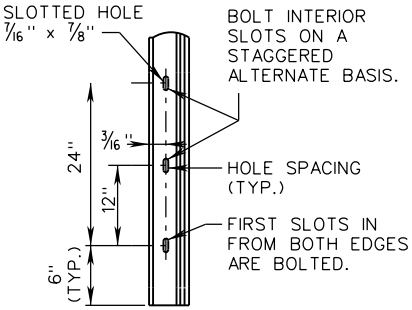

DETAIL D

NOTES:

1. DOUBLE POST CLIPS SHALL BE INSTALLED ON ALL SIGN HANGERS, EXCEPT ON OVERHEAD SIGN STRUCTURES WHERE CARRIAGE BOLTS ARE REQUIRED.

2. ALL SIGN PANELS INSTALLED ON OVERHEAD SIGN STRUCTURES SHALL BE BOLTED DIRECTLY TO THE SIGN HANGER MEMBERS AT THE BOTTOM AND TOP ROW IN ACCORDANCE WITH DETAIL E. POST CLIPS SHALL BE USED AT ALL OTHER MOUNTING POINTS.

A COPY OF THE ORIGINAL SEALED AND SIGNED DRAWING IS ON FILE IN THE CENTRAL OFFICE.

VDOT ROAD AND BRIDGE STANDARDS	EXTRUDED SIGN PANEL DESIGN	SPECIFICATION REFERENCE
SHEET 2 OF 2 / 1325.21 — REVISION DATE 07/16	VIRGINIA DEPARTMENT OF TRANSPORTATION	701

SPD-3

SIGN PANEL DIMENSIONS		SIGN PANEL ATTACHMENT DETAILS							
						ZEE BAR		TEE	CLAMPS
W	H	a	b	c	d	NO.	SIZE	NO.	NO.
12′	4′	2′-0″	8′-0″	14″	20″	2	B	0	0
11′	5′	1′-6″	8′-0″	16″	28″	2	B	0	0
10′	6′	1′-0″	8′-0″	12″	4′-0″	1	B	1	4
12′	6′	2′-0″	8′-0″	12″	4′-0″	1	B	1	4
14′	6′	3′-0″	8′-0″	12″	4′-0″	2	B	0	0
16′	6′	3′-6″	9′-0″	12″	4′-0″	2	C	0	0
18′	6′	4′-0″	10′-0″	12″	4′-0″	2	C	0	0
20′	6′	4′-6″	11′-0″	12″	4′-0″	2	D	0	0
22′	6′	4′-10″	12′-4″	12″	4′-0″	2	E	0	0
24′	6′	5′-4″	13′-4″	12″	4′-0″	2	E	0	0
26′	6′	5′-10″	14′-4″	12″	4′-0″	2	E	0	0
28′	6′	6′-3″	15′-6″	12″	4′-0″	2	E	0	0
30′	6′	6′-8″	16′-8″	12″	4′-0″	2	E	0	0
10′	8′	1′-0″	8′-0″	12″	3′-0″	1	B	2	8
12′	8′	2′-0″	8′-0″	12″	3′-0″	1	B	2	8
14′	8′	3′-0″	8′-0″	12″	3′-0″	1	B	2	8
16′	8′	3′-6	9′-0″	12″	3′-0″	3	B	0	0
18′	8′	4′-0″	10′-0″	12″	3′-0″	3	C	0	0
20′	8′	4′-6″	11′-0″	12″	3′-0″	3	C	0	0
22′	8′	4′-10″	12′-4″	12″	3′-0″	3	D	0	0
24′	8′	5′-4″	13′-4″	12″	3′-0″	3	D	0	0
26′	8′	5′-10″	14′-4″	12″	3′-0″	3	D	0	0
28′	8′	6′-3″	15′-6″	12″	3′-0″	3	E	0	0
30′	8′	6′-8″	16′-8″	12″	3′-0″	3	E	0	0
10′	10′	1′-0″	8′-0″	18″	3′-6″	1	B	2	8
12′	10′	2′-0″	8′-0″	18″	3′-6″	1	B	2	8
14′	10′	3′-0″	8′-0″	18″	3′-6″	1	B	2	8
16′	10′	3′-6″	9′-0″	18″	3′-6″	1	B	2	8
18′	10′	4′-0″	10′-0″	18″	3′-6″	3	C	0	0
20′	10′	4′-6″	11′-0″	18″	3′-6″	3	C	0	0
22′	10′	4′-10″	12′-4″	18″	3′-6″	3	C	0	0

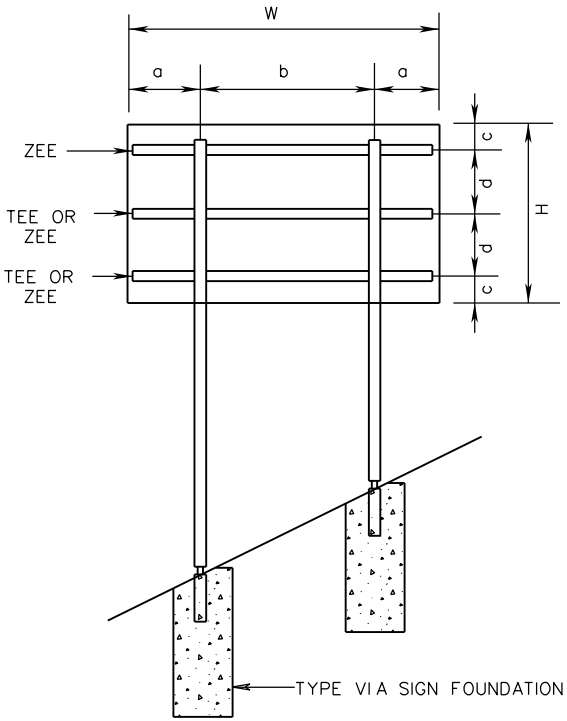

SPECIFICATION REFERENCE

701

SIGN PANEL DESIGN

VIRGINIA DEPARTMENT OF TRANSPORTATION

VDOT

ROAD AND BRIDGE STANDARDS

REVISION DATE

SHEET 1 OF 3

1325.30

SPD-3

SIGN PANEL DIMENSIONS		SIGN PANEL ATTACHMENT DETAILS							
						ZEE BAR		TEE	CLAMPS
W	H	a	b	c	d	NO.	SIZE	NO.	NO.
24′	10′	5′-4″	13′-4″	18″	3′-6″	3	D	0	0
26′	10′	5′-10″	14′-4″	18″	3′-6″	3	D	0	0
28′	10′	6′-3″	15′-6″	18″	3′-6″	3	D	0	0
30′	10′	7′-3″	15′-6″	18″	3′-6″	3	D	0	0
10′	9′	1′-0″	8′-0″	18″	3′-0″	1	B	2	8
12′	9′	2′-0″	8′-0″	18″	3′-0″	1	B	2	8
14′	9′	3′-0″	8′-0″	18″	3′-0″	1	B	2	8
16′	9′	3′-6″	9′-0″	18″	3′-0″	3	C	0	0
18′	9′	4′-0″	10′-0″	18″	3′-0″	3	C	0	0
20′	9′	4′-6″	11′-0″	18″	3′-0″	3	C	0	0
22′	9′	4′-10″	12′-4″	18″	3′-0″	3	D	0	0
24′	9′	5′-4″	13′-4″	18″	3′-0″	3	D	0	0
26′	9′	5′-10″	14′-4″	18″	3′-0″	3	D	0	0
28′	9′	6′-10″	14′-4″	18″	3′-0″	3	D	0	0
30′	9′	7′-10″	14′-4″	18″	3′-0″	3	D	0	0
12′	12′	2′-0″	8′-0″	18″	3′-0″	1	B	3	12
14′	12′	3′-0″	8′-0″	18″	3′-0″	1	B	3	12
16′	12′	3′-6″	9′-0″	18″	3′-0″	1	B	3	12
18′	12′	4′-0″	10′-0″	18″	3′-0″	1	B	3	12
20′	12′	4′-6″	11′-0″	21″	4′-3″	3	B	0	0
22′	12′	4′10″	12′-4″	21″	4′-3″	3	C	0	0
24′	12′	5′-4″	13′-4″	21″	4′-3″	3	C	0	0
26′	12′	3′-10″	9′-2″	21″	4′-3″	1	B	2	12
28′	12′	4′-2″	9′-10″	21″	4′-3″	1	B	2	12
30′	12′	4′-6″	10′-6″	21″	4′-3″	1	B	2	12
14′	14′	3′-0″	8′-0″	18″	3′-8″	1	B	3	12
16′	14′	3′-6″	9′-0″	18″	3′-8″	1	B	3	12
18′	14′	4′-0″	10′-0″	18″	3′-8″	1	B	3	12
20′	14′	4′-6″	11′-0″	18″	3′-8″	1	B	3	12
22′	14′	3′-0″	8′-0″	18″	3′-8″	1	B	3	18
24′	14′	3′-7″	8′-5″	18″	3′-8″	1	B	3	18
26′	14′	3′-10″	9′-2″	18″	3′-8″	1	B	3	18

SIGN PANEL DIMENSIONS		SIGN PANEL ATTACHMENT DETAILS							
						ZEE BAR		TEE	CLAMPS
W	H	a	b	c	d	NO.	SIZE	NO.	NO.
28′	14′	4′-2″	9′-10″	18″	3′-8″	1	B	3	18
30′	14′	4′-6″	10′-6″	18″	3′-8″	1	B	3	18
16′	16′	3′-6″	9′-0″	18″	3′-3″	1	B	4	16
18′	16′	4′-0″	10′-0″	18″	3′-3″	1	B	4	16
20′	16′	2′-0″	8′-0″	18″	3′-3″	1	B	4	24
22′	16′	3′-0″	8′-0″	18″	3′-3″	1	B	4	24
24′	16′	3′-7″	8′-5″	18″	3′-3″	1	B	4	24
26′	16′	3′-10″	9′-2″	18″	3′-3″	1	B	4	24
28′	16′	4′-2″	9′-10″	18″	3′-3″	1	B	4	24
30′	16′	4′-6″	10′-6″	18″	3′-3″	1	B	4	24
VARIES	2′-6″	-	-	9″	12″	2	B	-	-

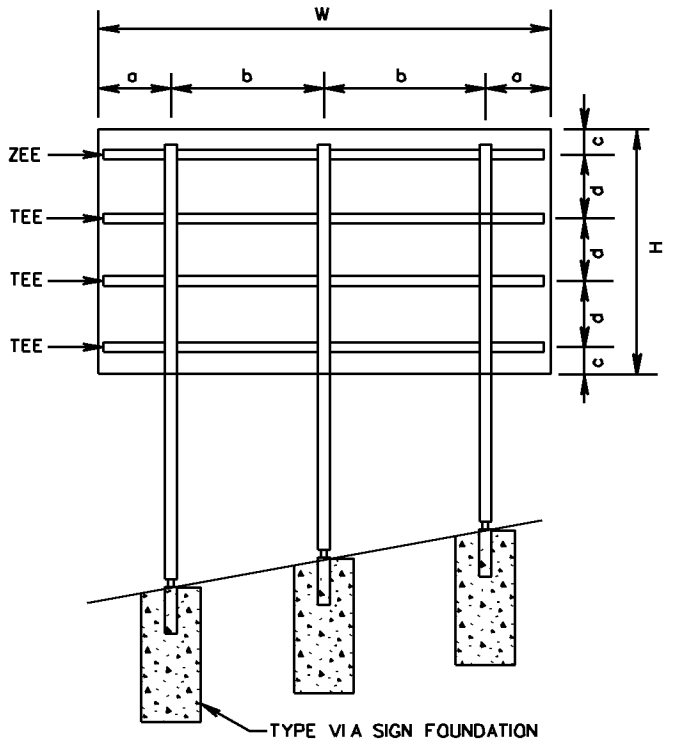

VDOT
ROAD AND BRIDGE STANDARDS

SHEET 2 OF 3

1325.31

REVISION DATE 4/09

SIGN PANEL DESIGN

VIRGINIA DEPARTMENT OF TRANSPORTATION

SPECIFICATION REFERENCE

701

SPD-3

ISOMETRIC VIEW

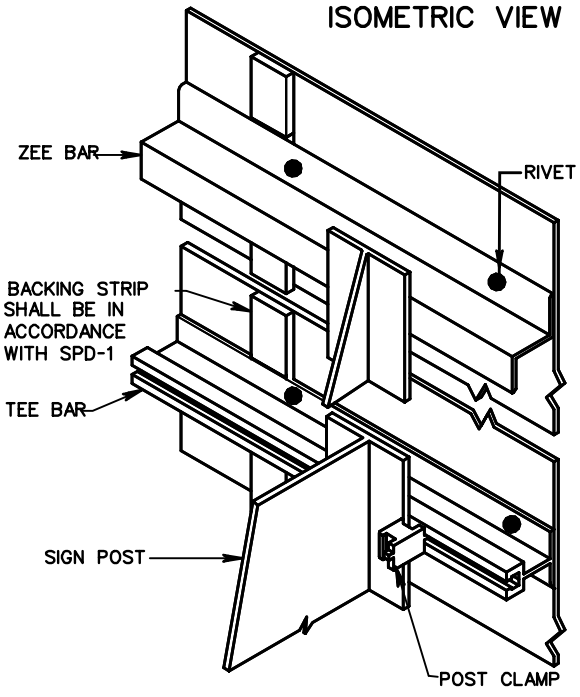

UNLESS OTHERWISE NOTED THE TOP OF THE SIGN PANEL SHALL NOT EXTEND ABOVE THE SIGN POST NO GREATER THAN THE DISTANCE OF 1/2 C.

POST CLAMP DETAIL

GALVANIZED GRAY - IRON OR ALUMINUM CASTING

CENTERLINE HOLE FOR 3/8" DIAMETER SQUARE HEAD STAINLESS STEEL BOLT X 2 1/4" LONG WITH SELF-LOCKING NUT AND ONE FLAT WASHER.

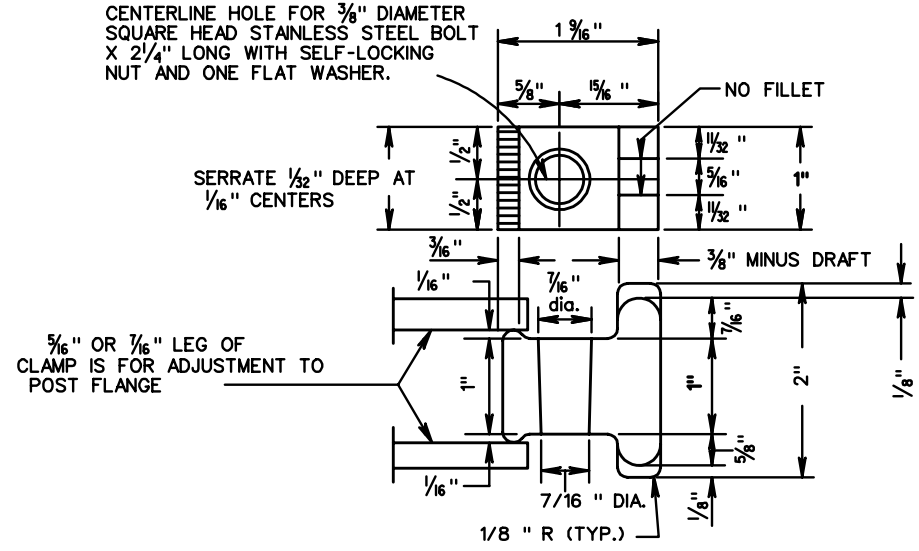

FASTENING

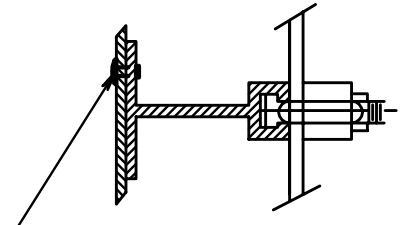

3/16" DIAMETER RIVET. -RIVETS SHALL BE DOME HEAD,BREAK MANDREL, BLIND RIVETS CONFORMING TO INDUSTRIAL FASTENERS INSTITUTE STANDARD IFI-114, STYLE 1, GRADES 10 OR 11 EXCEPT THAT THE MINIMUM ULTIMATE TENSILE STRENGTH SHALL BE 360 POUNDS. RIVETS SHALL HAVE A GRIP RANGE ACCOMMODATING THE COMBINED THICKNESS OF THE SIGN PANEL AND ZEE BAR AND SHALL BE INSTALLED IN ACCORDANCE WITH THE MANUFACTURER'S RECOMMENDATIONS.

TEE BAR

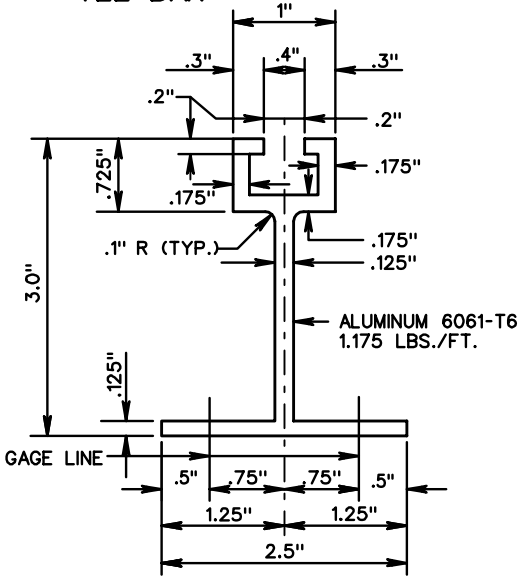

ZEE BARS		
TYPE	SIZE	WEIGHT
A	2 3/8" x 1 1/4" x 3/16"	1.00LBS./FT.
B	3" x 2 11/16" x 1/4"	2.40LBS./FT.
C	4" x 3 1/16" x 1/4"	2.93LBS./FT.
D	5" x 3 1/4" x 5/16"	4.13LBS./FT.
E	6" x 3 1/2" x 3/8"	5.58LBS./FT.

SPECIFICATION REFERENCE	SIGN PANEL DESIGN	VDOT ROAD AND BRIDGE STANDARDS
700 701	VIRGINIA DEPARTMENT OF TRANSPORTATION	REVISION DATE / SHEET 3 OF 3 / 1325.32

SPD-4

TYPE VA-A

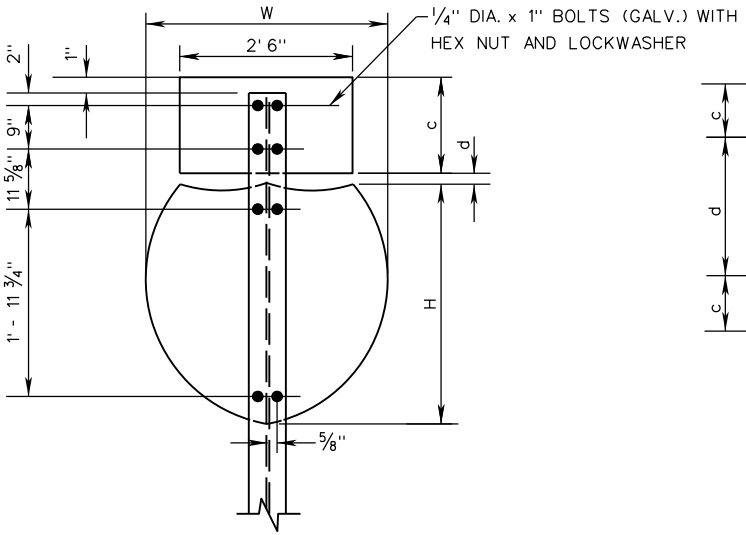

TYPES VA-B, VA-C, VA-D, VA-E, VA-L, VA-M, VA-N AND VA-O

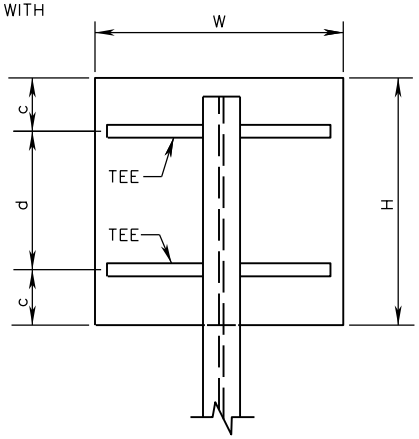

TYPE VA-F

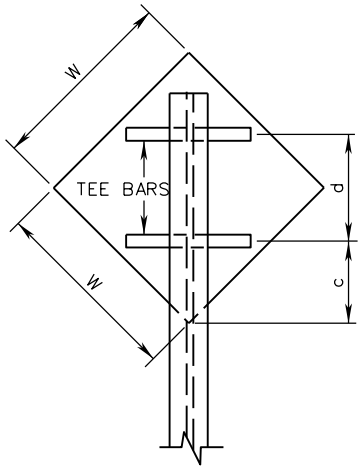

UNLESS OTHERWISE NOTED THE TOP OF THE SIGN PANEL SHALL NOT EXTEND ABOVE THE SIGN POST NO GREATER THAN THE DISTANCE OF 1/2 c.

TYPE VA-G

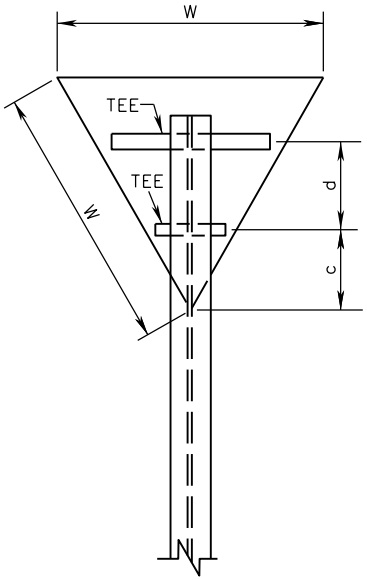

TYPE VA-K

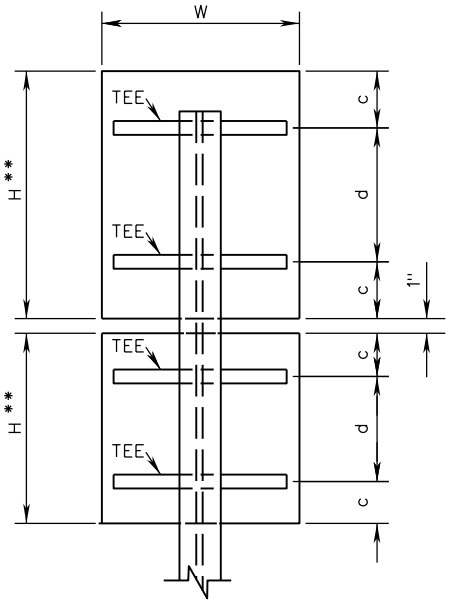

TYPE VA-A2

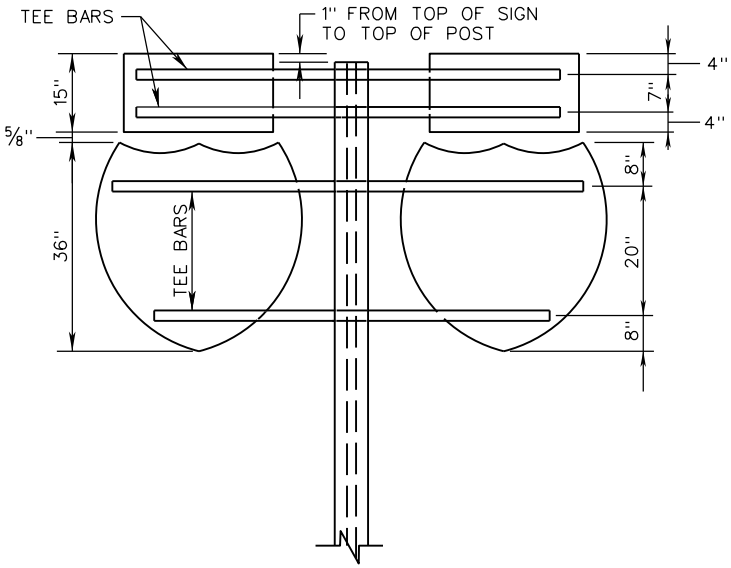

VDOT ROAD AND BRIDGE STANDARDS	A COPY OF THE ORIGINAL SEALED AND SIGNED DRAWING IS ON FILE IN THE CENTRAL OFFICE.		SPECIFICATION REFERENCE
SHEET 1 OF 2	SIGN PANEL DESIGN		701
1325.40	REVISION DATE 01/15	VIRGINIA DEPARTMENT OF TRANSPORTATION	

SPD-4

FASTENING

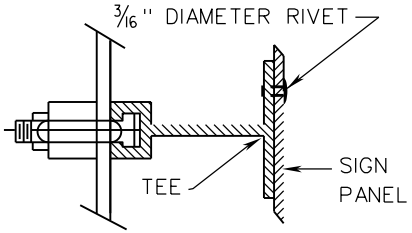

RIVETS SHALL BE DOME HEAD, BREAK MANDREL, BLIND RIVETS CONFORMING TO INDUSTRIAL FASTENERS INSTITUTE STANDARD IFI-114, STYLE 1, GRADES 10 OR 11 EXCEPT THAT THE MINIMUM ULTIMATE TENSILE STRENGTH SHALL BE 360 POUNDS. RIVETS SHALL HAVE A GRIP RANGE ACCOMMODATING THE COMBINED THICKNESS OF THE SIGN PANEL AND ZEE BAR AND SHALL BE INSTALLED IN ACCORDANCE WITH THE MANUFACTURER'S RECOMMENDATIONS.

POST CLAMP DETAIL

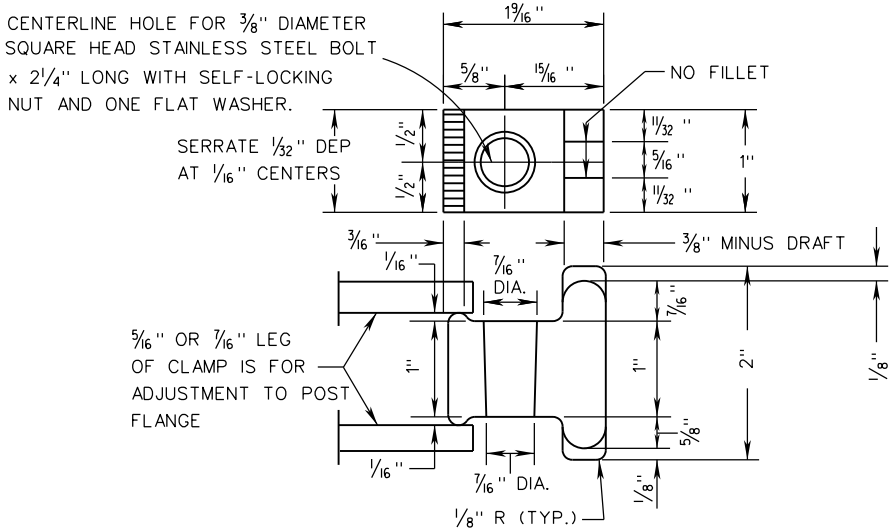

TEE CROSS SECTION

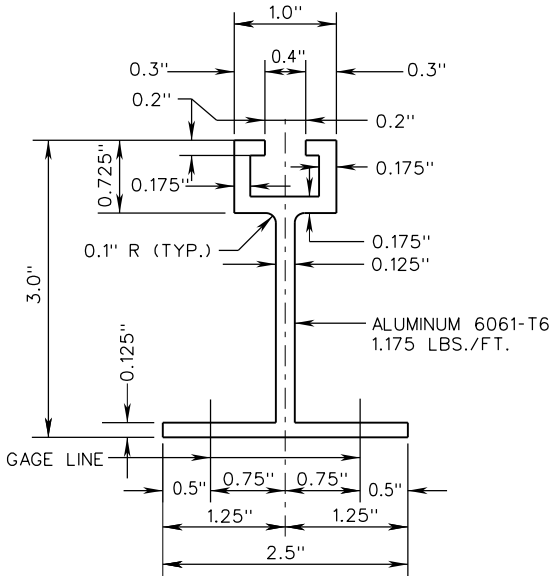

TEE BAR SPACING CHART

STRUCTURE TYPE	SIGN PANEL DIMENSIONS				TEE 6061-T6 2.5 x 3.0 @ 1.175 LB/FT.		
	W	H	c	d	NUMBER	LENGTH	CLAMP
VA-A	3'	3'	1'-3"	5/8"	-	-	-
VA-B	4'	4'	1'-2"	1'-8"	2	3'-0"	4
VA-C	4'	5'	1'-3"	2'-6"	2	3'-0"	4
VA-D	5'	3'	0'-8"	1'-8"	2	4'-0"	4
VA-E	6'	5'	1'-3"	2'-6"	2	5'-0"	4
VA-F	4'	-	1'-8"	2'-4"	2	2'-10"	4
VA-G	5'	-	1'-8"	-	1 EACH	2'-10" & 1'-4"	4
VA-K	4'	5'	1'-3"	2'-6"	2	3'-0"	4
VA-K	4'	4'	1'-2"	1'-8"	2	3'-0"	4
VA-L	6'	6'	1'-6"	3'-0"	2	5'-0"	4
VA-M	5'	5'	1'-3"	2'-6"	2	4'-0"	4
VA-A2	6'	3'	-	-	4	5'-0"	-
VA-N	7'	7'	1'-0"	2'-6"	3	6'-0"	6
VA-O	13'	5'	1'-3"	2'-6"	2	4'-0"	4

SPECIFICATION REFERENCE

701

A COPY OF THE ORIGINAL SEALED AND SIGNED DRAWING IS ON FILE IN THE CENTRAL OFFICE.

SIGN PANEL DESIGN

VIRGINIA DEPARTMENT OF TRANSPORTATION

VDOT

ROAD AND BRIDGE STANDARDS

REVISION DATE 01/15

SHEET 2 OF 2

1325.41

SPD-5

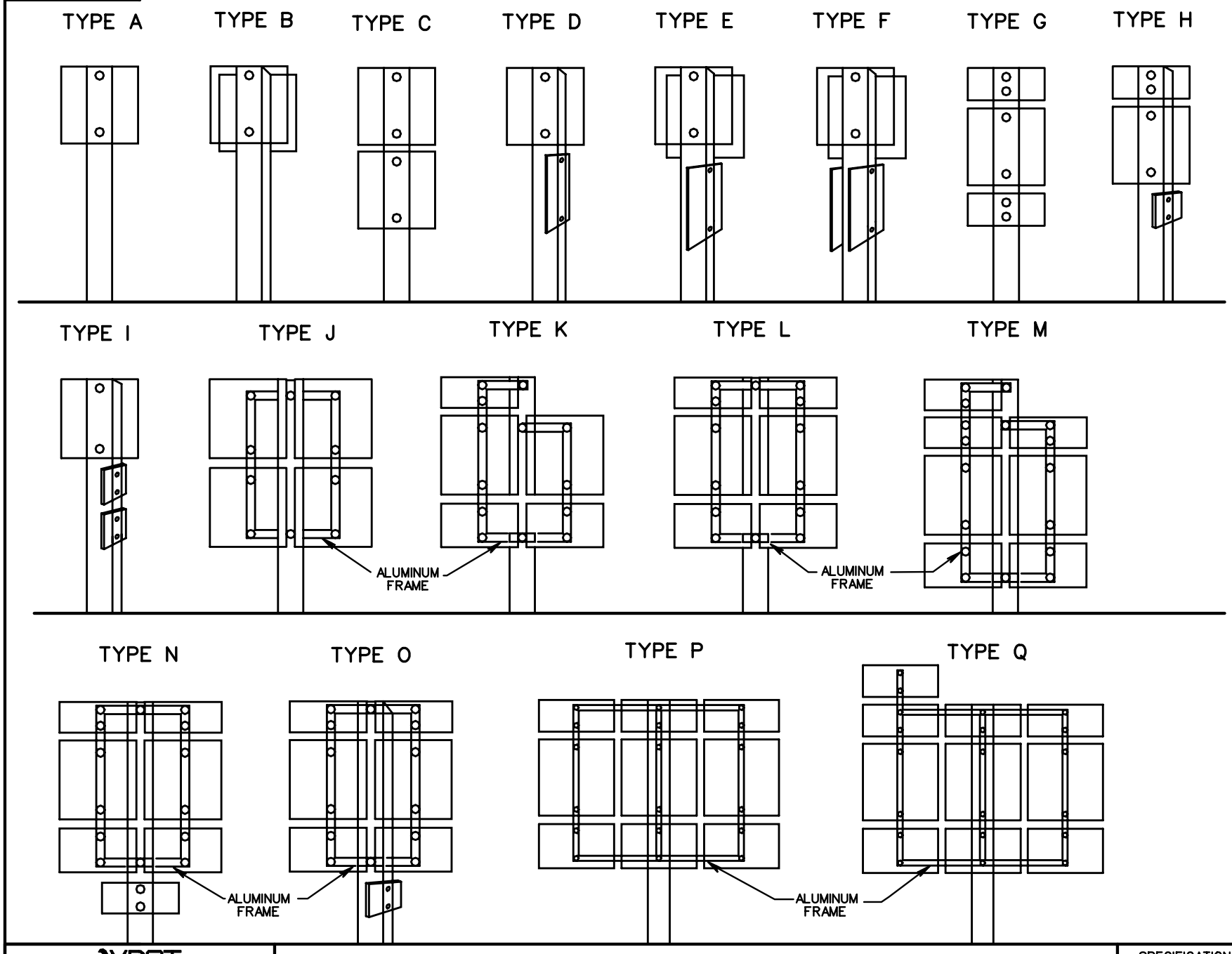

VDOT
ROAD AND BRIDGE STANDARDS

SHEET 1 OF 2

REVISION DATE

1325.50

SIGN PANEL DESIGN

VIRGINIA DEPARTMENT OF TRANSPORTATION

SPECIFICATION REFERENCE

701

SPD-5

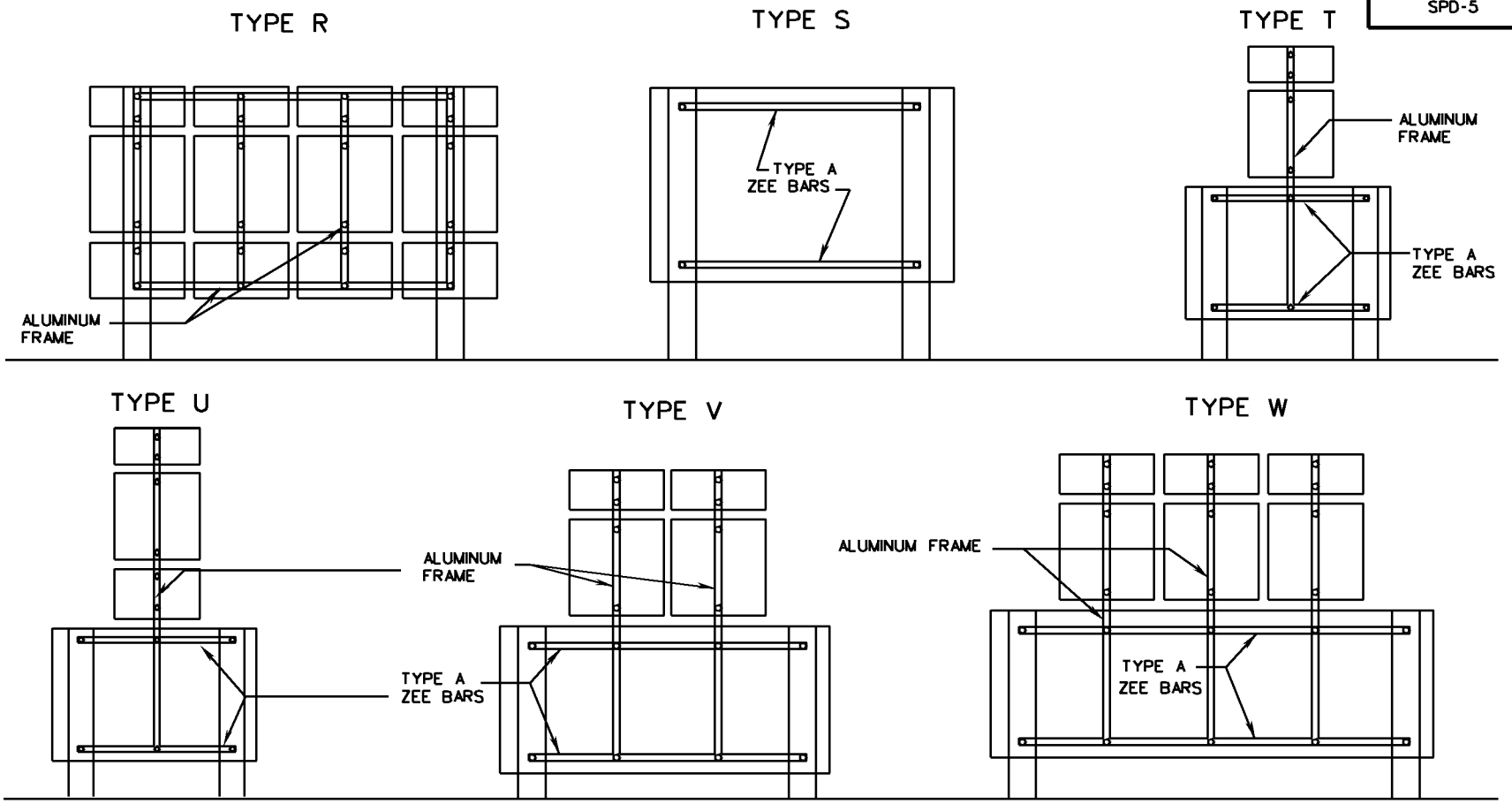

ALUMINUM FRAMING

SIGN PANEL ATTACHMENT DETAILS

(FOR SIGN PANEL ATTACHMENT TO Z BARS, SEE STANDARD SPD-1)

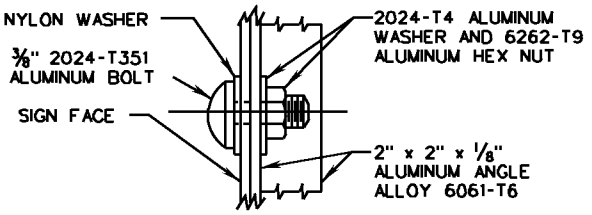

NOTES

NYLON WASHER SHALL BE 1/8" THICK MINIMUM WITH AN OUTSIDE DIAMETER OF 1" AND AN INSIDE DIAMETER OF 7/16".

TO OBTAIN A FLUSH MOUNTING SURFACE FOR SIGNS, ALL WOOD POST SHALL BE MORTISED WHERE NECESSARY TO RECESS THE FLANGE OF ALUMINUM ANGLE.

THE TYPE A ZEE BARS SHALL BE 2 3/8" X 1 1/4" X 3/16".

ALL VERTICAL AND HORIZONTAL SPACING BETWEEN SIGNS IN AN ASSEMBLY SHALL BE ONE INCH UNLESS SPECIFIED.

THESE ARE TYPICAL SIGN PANEL ASSEMBLIES; ALL ASSEMBLIES SHALL BE IN ACCORDANCE WITH PLAN DETAILS.

SPECIFICATION REFERENCE	SIGN PANEL DESIGN	VDOT ROAD AND BRIDGE STANDARDS	
701	VIRGINIA DEPARTMENT OF TRANSPORTATION	REVISION DATE 6-15-09	SHEET 2 OF 2
			1325.51

SPD-6

TYPES VA-B, VA-C, VA-D, VA-L AND VA-M

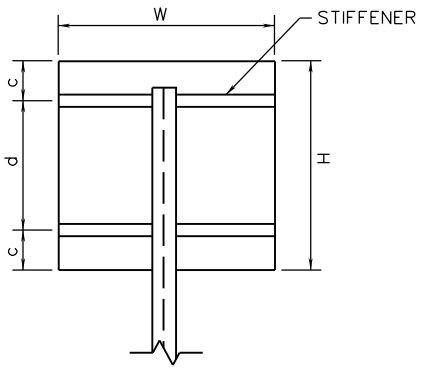

TYPES VA-E, VA-N AND VA-O

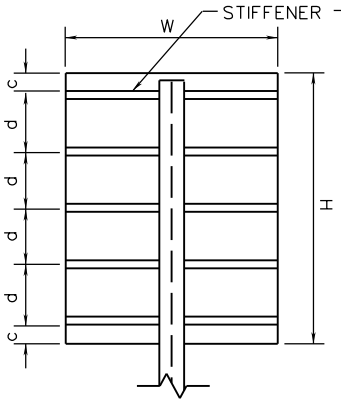

TYPES VA-F

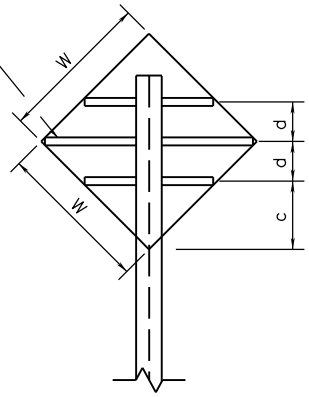

TYPES VA-G

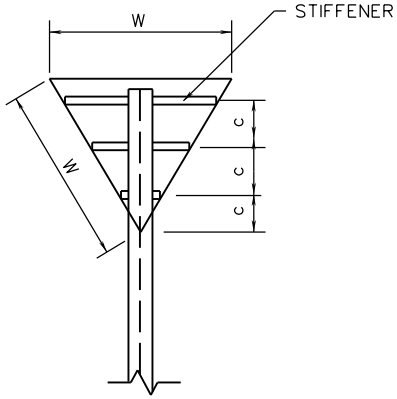

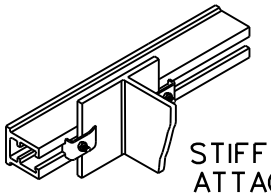

STIFFENER TO POST ATTACHMENT DETAIL

STRUCTURE TYPE	W	H	c	d	STIFFENERS NO.	STIFFENERS SIZE
VA-B	4'	4'	6½"	2'-11"	2	MEDIUM
VA-C	4'	5'	12½"	2'-11"	2	MEDIUM
VA-D	5'	3'	7"	1'-10"	2	MEDIUM
VA-E	6'	5'	0"	1'-3"	5	MEDIUM
VA-F	4'	——	8"	2'-2"	3	MEDIUM
VA-G	5'	——	1'-4"	——	3	MEDIUM
VA-K	4'	5'	12½"	2'-11"	2	MEDIUM
	4'	4'	6½"	2'-11"	2	MEDIUM
VA-L	6'	6'	6"	1'-3"	5	MEDIUM
VA-M	5'	5'	8"	1'-10"	3	MEDIUM
VA-N	7'	7'	5¼"	10½"	8	MEDIUM
VA-O	13'	5'	1½"	3"	20	MEDIUM

SEE STANDARD SPD-4 FOR POST CLAMP AND BOLT DETAILS.

UNLESS OTHERWISE NOTED THE TOP OF THE SIGN PANEL SHALL NOT EXTEND ABOVE THE SIGN POST NO GREATER THAN THE DISTANCE OF ½ c.

MEDIUM STIFFENER DETAIL

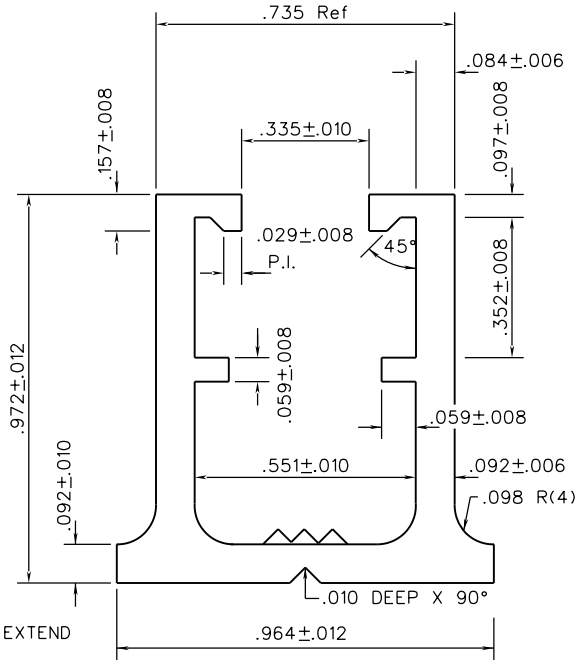

TYPES VA-K

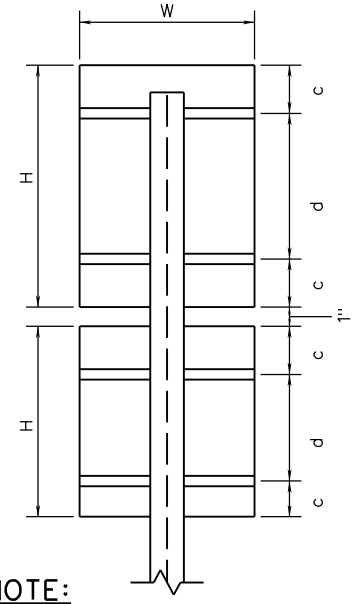

NOTE:

RIVETS SHALL BE USED FOR SECURING THE STIFFENERS TO THE SIGN UNLESS OTHERWISE SPECIFIED OR APPROVED, AND SHALL BE 3/16" MINIMUM DIAMETER BY ½" LONG ALUMINUM AND CAPABLE OF WITHSTANDING A MINIMUM SHEAR FORCE OF 460LBS. RIVET SPACING FOR ATTACHING THE STIFFENERS TO THE SIGN PANEL SHALL BE 6" MAXIMUM BEGINNING 1½" FROM THE ENDS OF THE SIGN PANEL.

VDOT
ROAD AND BRIDGE STANDARDS

SHEET 1 OF 1

1325.60

REVISION DATE 01/15

A COPY OF THE ORIGINAL SEALED AND SIGNED DRAWING IS ON FILE IN THE CENTRAL OFFICE.

SIGN PANEL DESIGN

VIRGINIA DEPARTMENT OF TRANSPORTATION

SPECIFICATION REFERENCE

701

SPD-7

SIGN PANEL DETAIL

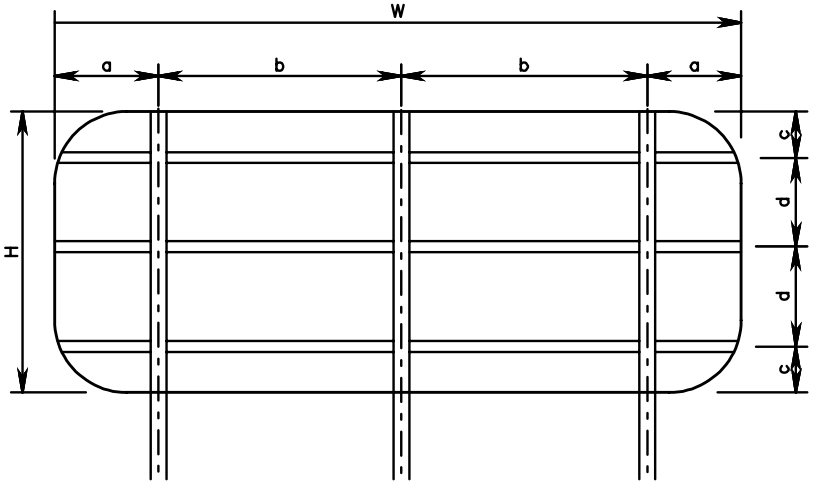

SIGN PANEL DETAIL

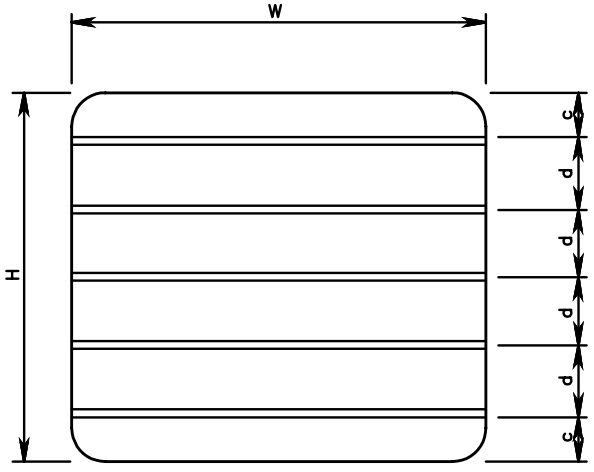

SIGN PANEL DETAIL

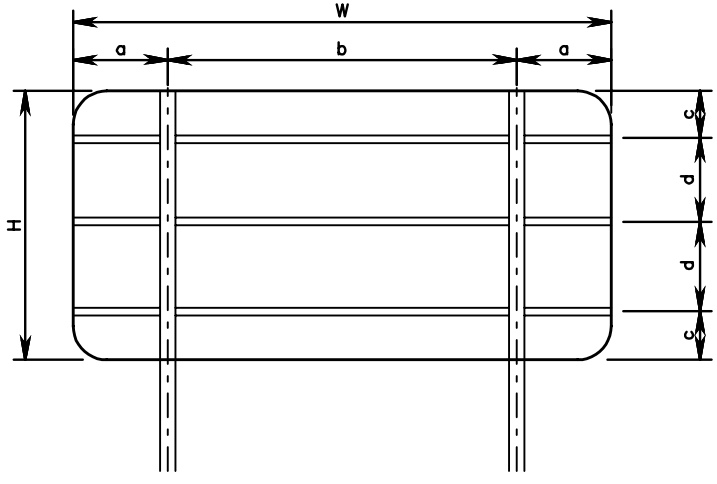

POST CLAMP BOLT (STAINLESS STEEL)

STIFFENER TO POST ATTACHMENT DETAIL

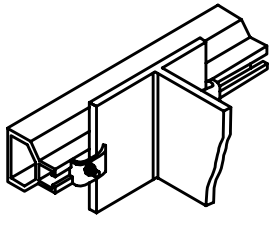

POST CLAMP (STAINLESS STEEL)

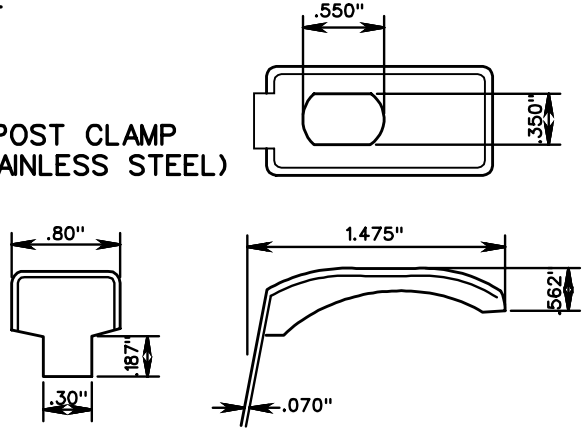

SPECIFICATION REFERENCE	SIGN PANEL DESIGN	VDOT ROAD AND BRIDGE STANDARDS
701	VIRGINIA DEPARTMENT OF TRANSPORTATION	REVISION DATE / SHEET 1 OF 3 / 1325.70

SPD-7

LARGE STIFFENER SPLICE

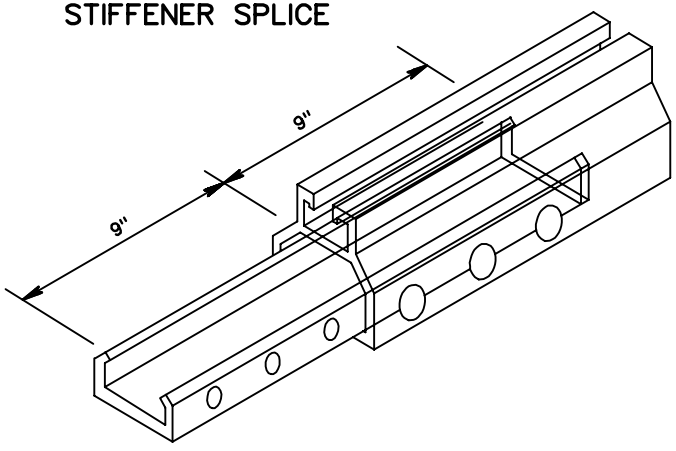

LARGE STIFFENER SPLICE BAR

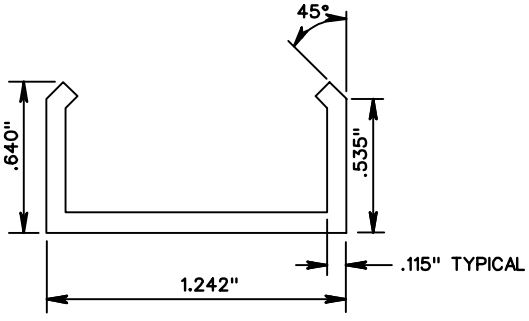

THE MAXIMUM NUMBER OF SPLICES IN A STIFFENER SHALL BE ONE PER STIFFENER LOCATION.

SPLICES SHALL NOT BE IN A VERTICAL ALIGNMENT BUT SHALL BE OFFSET 12" FROM EACH OTHER.

LARGE STIFFENER DETAIL

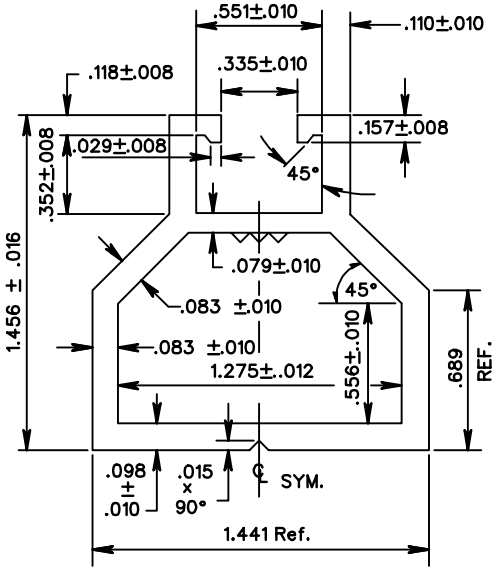

VDOT ROAD AND BRIDGE STANDARDS	SIGN PANEL DESIGN	SPECIFICATION REFERENCE	
SHEET 2 OF 3	REVISION DATE	VIRGINIA DEPARTMENT OF TRANSPORTATION	701
1325.71			

SPD-7

SIGN PANEL DIMENSIONS		SIGN PANEL ATTACHMENT DETAILS					
						STIFFENER	
W	H	a	b	c	d	NO.	SIZE
12'	4'	2'-0"	8'-0"	11 1/2"	2'-1"	2	LARGE
11'	5'	1'-6"	8'-0"	1 1/2"	2'-0"	3	LARGE
10'	6'	1'-0"	8'-0"	4"	1'-8"	4	LARGE
12'	6'	2'-0"	8'-0"	11"	1'-8"	4	LARGE
14'	6'	2'-10"	8'-5"	0	3'-0"	3	LARGE
16'	6'	3'-2"	9'-7"	0"	3'-0"	3	LARGE
18'	6'	3'-7"	10'-10"	6"	1'-8"	4	LARGE
20'	6'	4'-0"	12'-0"	4"	1'-4"	5	LARGE
22'	6'	4'-5"	13'-2"	1"	1'-2"	6	LARGE
24'	6'	4'-10	14'-5"	3"	11"	7	LARGE
26'	6'	5'-2"	15'-7"	0"	8"	10	LARGE
10'	8'	1'-0"	8'-0"	8"	1'-8"	5	LARGE
12'	8'	2'-0"	8'-0"	6"	2'-4"	4	LARGE
14'	8'	2'-10"	8'-5"	1'-0"	3'-0"	3	LARGE
16'	8'	3'-2"	9'-7"	6"	2'-4"	4	LARGE
18'	8'	3'-7"	10'-10"	3"	1'-6"	6	LARGE
20'	8'	4'-0"	12'-0"	3"	1'-6"	6	LARGE
22'	8'	4'-5"	13'-2"	6"	12"	8	LARGE
24'	8'	4'-10"	14'-5"	3"	9"	11	LARGE
26'	8'	5'-2"	15'-7"	0"	8"	13	LARGE
10'	8'	1'-0"	8'-0"	8"	1'-8"	5	LARGE
12'	8'	2'-0"	8'-0"	6"	2'-4"	4	LARGE
14'	8'	2'-10"	8'-5"	1'-0"	3'-0"	3	LARGE
16'	8'	3'-2"	9'-7"	6"	2'-4"	4	LARGE
18'	8'	3'-7"	10'-10"	3"	1'-6"	6	LARGE
18'	8'	3'-7"	10'-10"	3"	1'-6"	6	LARGE
20'	8'	4'-0"	12'-0"	3"	1'-6"	6	LARGE
22'	8'	4'-5"	13'-2"	6"	12"	8	LARGE
24'	8'	4'-10"	14'-5"	3"	9"	11	LARGE
26'	8'	5'-2"	15'-7"	0	8"	13	LARGE
10'	10'	1'-0"	8'-0"	0	2'-0"	6	LARGE

SIGN PANEL DIMENSIONS		SIGN PANEL ATTACHMENT DETAILS					
						STIFFENER	
W	H	a	b	c	d	NO.	SIZE
12'	10'	2'-0"	8'-0"	4"	2'-4"	5	LARGE
14'	10'	2'-10"	8'-5"	6"	3'-0"	4	LARGE
16'	10'	3'-2"	9'-7"	4"	2'-4"	5	LARGE
18'	10'	3'-7"	10'-10"	0	1'-8"	7	LARGE
20'	10'	4'-0"	12'-0"	4"	1'-4"	8	LARGE
22'	10'	4'-5"	13'-2"	4"	1'-2"	9	LARGE
24'	10'	4'-10"	14'-5"	5"	10"	12	LARGE
26'	10'	5'-2"	15'-7"	0	8"	16	LARGE
10'	9'	1'-0"	8'-0"	4"	1'-8"	6	LARGE
12'	9'	2'-0"	8'-0"	4"	2'-1"	5	LARGE
14'	9'	2'-10"	8'-5"	0	3'-0"	4	LARGE
16'	9'	3'-2"	9'-7"	1'-0"	2'-4"	4	LARGE
18'	9'	3'-7"	10'-10"	4"	1'-8"	6	LARGE
20'	9'	4'-0"	12'-0"	0	1'-6"	7	LARGE
22'	9'	4'-5"	13'-2"	5"	1'-2"	8	LARGE
22'	9'	4'-5"	13'-2"	5"	1'-2"	8	LARGE
24'	9'	4'-10"	14'-5"	4"	10"	11	LARGE
26'	9'	5'-2"	15'-7"	2"	8"	14	LARGE
12'	12'	2'-0"	8'-0"	2"	2'-1"	6	LARGE
14'	12'	2'-10"	8'-5"	0	3'-0"	5	LARGE
16'	12'	3'-2"	9'-7"	2"	2'-4"	6	LARGE
18'	12'	3'-7"	10'-10"	2"	1'-8"	8	LARGE
20'	12'	4'-0"	12'-0"	8"	1'-4"	9	LARGE
22'	12'	4'-5"	13'-2"	2"	1'-2"	11	LARGE
24'	12'	4'-10"	14'-5"	1/2"	11"	14	LARGE
14'	14'	2'-10"	8'-5"	1'-0"	3'-0"	5	LARGE
16'	14'	3'-2"	9'-7"	0	2'-4"	7	LARGE
18'	14'	3'-7"	10'-10"	4"	1'-8"	9	LARGE
20'	14'	4'-0"	12'-0"	4"	1'-4"	11	LARGE
16'	16'	3'-2"	9'-7"	1'-0"	2'-4"	7	LARGE
18'	16'	3'-7"	10'-10"	6"	1'-8"	10	LARGE
VARIES	2'- 6"	-	-	9"	12"	2	LARGE

SPECIFICATION REFERENCE

701

SIGN PANEL DESIGN

VIRGINIA DEPARTMENT OF TRANSPORTATION

VDOT

ROAD AND BRIDGE STANDARDS

REVISION DATE 4/09

SHEET 3 OF 3

1325.72

PRS-1

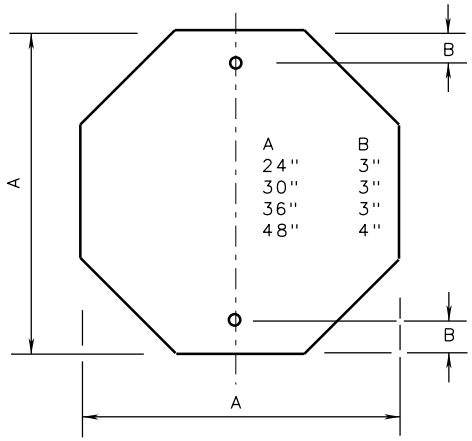

A	B
24"	3"
30"	3"
36"	3"
48"	4"

OCTAGON

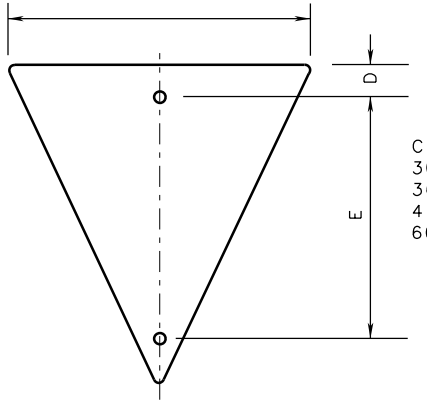

C	D	E
30"	3"	18"
36"	3"	21"
48"	6"	27"
60"	6"	34"

EQUILATERAL TRIANGLE

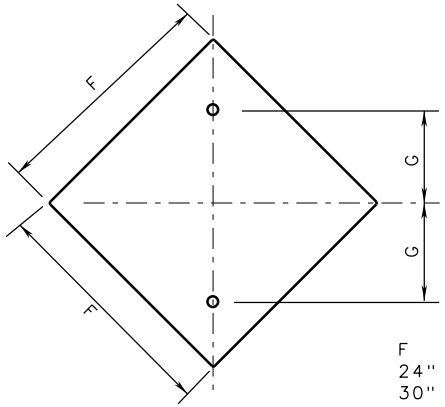

F	G
24"	12"
30"	15"
36"	18"
48"	24"
60"	30"

DIAMOND

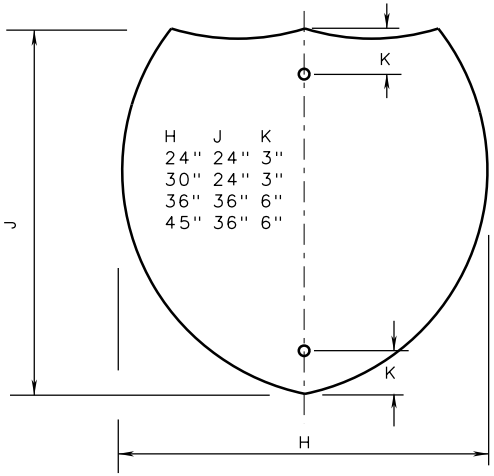

H	J	K
24"	24"	3"
30"	24"	3"
36"	36"	6"
45"	36"	6"

INTERSTATE SHIELD

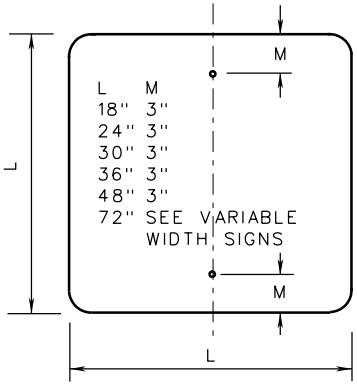

L	M
18"	3"
24"	3"
30"	3"
36"	3"
48"	3"
72"	SEE VARIABLE WIDTH SIGNS

SQUARE

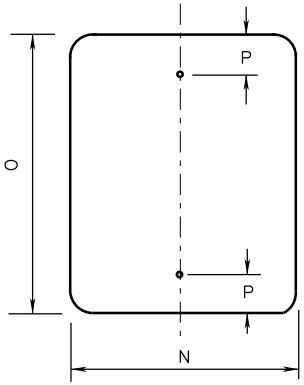

N	O	P
12"	18"	1½"
12"	72"	4"
18"	24"	3"
24"	30"	3"
30"	36"	3"
30"	60"	5"
36"	48"	3"
42"	48"	3"
48"	60"	5"

VERTICAL RECTANGLE

NOTE:

ALL HOLES SHALL BE 7/16" IN DIAMETER.

VDOT
ROAD AND BRIDGE STANDARDS

SHEET 1 OF 2 | REVISION DATE

1326.10

PUNCHING REQUIREMENTS FOR SIGN PANELS

SINGLE POST INSTALLATIONS

VIRGINIA DEPARTMENT OF TRANSPORTATION

SPECIFICATION REFERENCE

701

PRS-1

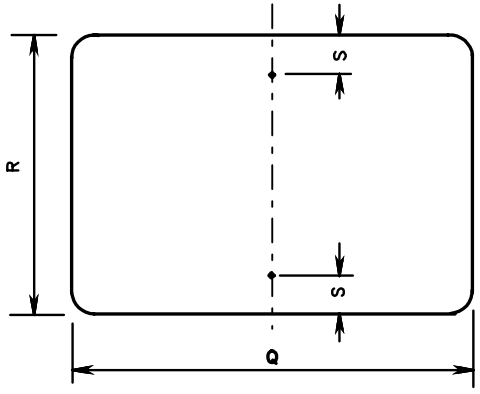

HORIZONTAL RECTANGLE

Q	R	S
18"	6"	1½"
18"	12"	1½"
20"	6"	1½"
21"	15"	1½"
24"	9"	1½"
24"	12"	1½"
24"	18"	3"
30"	15"	1½"
30"	24"	3"
36"	12"	1½"
36"	18"	2"
36"	24"	3"
42"	24"	3"
45"	36"	3"
48"	24"	3"
48"	36"	3"
48"	42"	4"
54"	24"	3"
54"	30"	3"

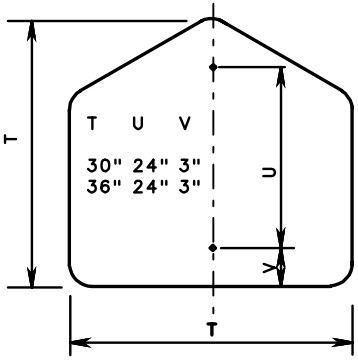

T	U	V
30"	24"	3"
36"	24"	3"

PENTAGON

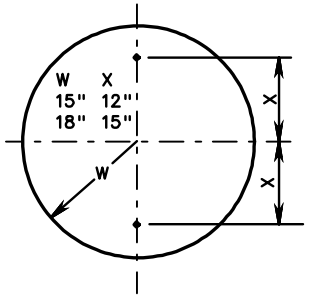

W	X
15"	12"
18"	15"

CIRCLE

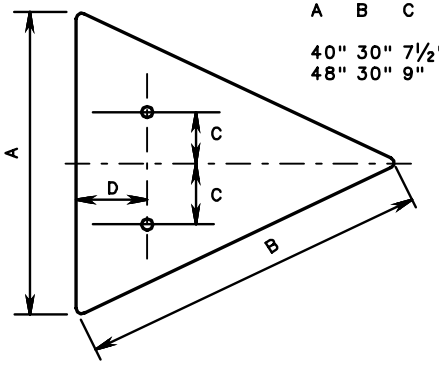

A	B	C	D
40"	30"	7½"	12"
48"	30"	9"	15"

ISOSCELES TRIANGLE

SPECIFICATION REFERENCE
701

PUNCHING REQUIREMENTS FOR SIGN PANELS

SINGLE POST INSTALLATIONS

VIRGINIA DEPARTMENT OF TRANSPORTATION

VDOT

ROAD AND BRIDGE STANDARDS

REVISION DATE

SHEET 2 OF 2

1326.11

ED-2

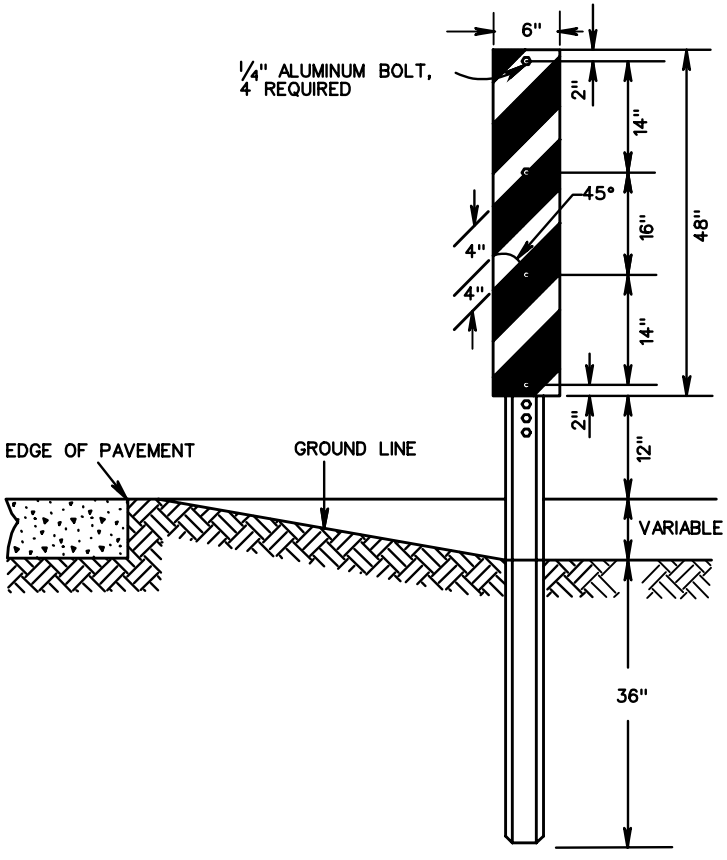

NOTES:

SPECIAL DELINEATORS ARE MADE FROM ALUMINUM ALLOY, NOT LESS THAN 0.080 THICK CONFORMING TO ASTM B209, ALLOY 6061-T6 OR 5052-H38.

DELINEATORS EXTEND 1" ABOVE THE TOP OF THE POST.

DELINEATORS ARE REFLECTORIZED, AND IN ALL CASES, THE COLOR SHALL CONFORM TO THE COLOR OF THE EDGELINES, ALTERNATING WITH A BLACK STRIPE.

THE STRIPES SHALL SLOPE DOWN TOWARD THE CENTER OF ROADWAY.

DELINEATORS SHALL BE MOUNTED ON U-TYPE POSTS FABRICATED FROM ROLLED-RAIL STEEL 1.33 LB./FT. MINIMUM.

THE BOTTOM OF THE DELINEATOR PANEL SHALL BE 12" ABOVE THE PAVEMENT EDGE ELEVATION.

VDOT ROAD AND BRIDGE STANDARDS	ROAD EDGE DELINEATOR TYPICAL DETAILS VIRGINIA DEPARTMENT OF TRANSPORTATION	SPECIFICATION REFERENCE
SHEET 1 OF 1 / REVISION DATE		702
1327.10		

ED-3

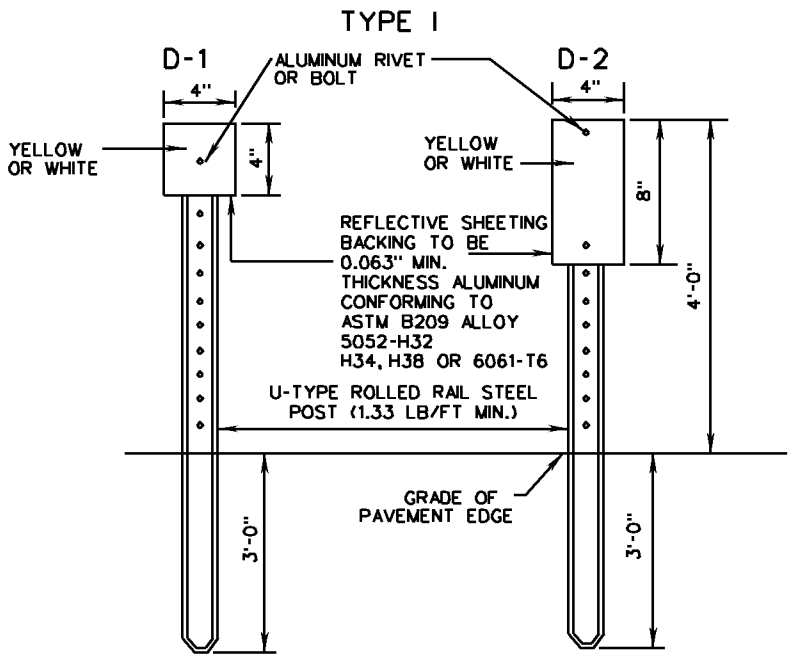

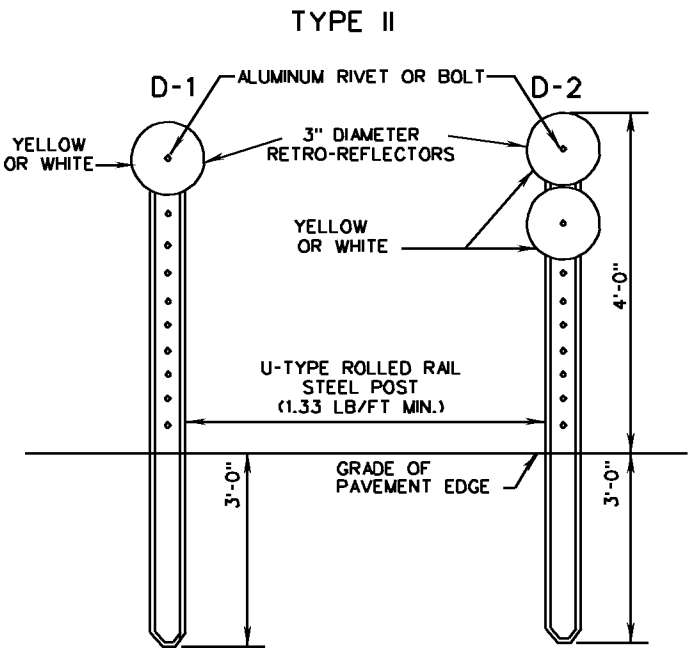

NOTES:

ROAD EDGE DELINEATORS ARE TO BE ERECTED TWO FEET BEYOND THE OUTER EDGE OF THE SHOULDER OR THE FACE OF UNMOUNTABLE CURB.

D-1 DELINEATORS SHALL BE PLACED ON THE RIGHT OF THROUGH ROADWAYS AT 528 FOOT SPACING WITH THE FOLLOWING EXCEPTIONS:

TANGENT ROADWAYS WHERE PAVEMENT MARKERS ARE INSTALLED WILL NOT REQUIRE THE INSTALLATION OF DELINEATORS.

LOCATIONS WHERE DELINEATORS ARE INSTALLED ON GUARDRAILS, PARAPETS OR BARRIERS ON THE RIGHT OF THE ROADWAY WILL NOT REQUIRE THE INSTALLATION OF ROAD EDGE DELINEATORS.

D-1 DELINEATORS SHALL BE PLACED ON AT LEAST ONE SIDE AND ON THE OUTSIDE CURVE OF INTERCHANGE RAMPS EXCEPT WHERE DELINEATORS ARE INSTALLED ON GUARDRAILS, PARAPETS OR BARRIERS. THE SPACING ALONG THE RAMPS SHALL BE AT 100' INTERVALS EXCEPT IN HORIZONTAL CURVES WHERE THE SPACING SHALL CONFORM TO THE CHART ON SPACING FOR HIGHWAY DELINEATORS.

D-2 DELINEATORS SHALL BE PLACED ON ACCELERATION AND DECELERATION LANES AT 100' SPACING.

THE COLOR OF DELINEATORS SHALL CONFORM TO THE COLOR OF THE ADJACENT EDGELINES.

SPACING FOR HIGHWAY DELINEATORS ON HORIZONTAL CURVES

DISTANCE IN FEET ROUNDED TO THE NEAREST 5'.

RADIUS OF CURVE IN FEET	SPACING ON CURVE IN FEET
50	20
150	30
200	35
250	40
300	50
400	55
500	65
600	70
700	75
800	80
900	85
1000	90

SPACING FOR SPECIFIC RADII NOT SHOWN MAY BE INTERPOLATED FROM TABLE. THE MINIMUM SPACING SHOULD BE 20'. THE SPACING ON CURVES SHOULD NOT EXCEED 300'. IN ADVANCE OF OR BEYOND A CURVE, AND PROCEEDING AWAY FROM THE END OF THE CURVE, THE SPACING OF THE FIRST DELINEATOR IS 2S, THE SECOND IS 3S AND THE THIRD IS 6S BUT NOT TO EXCEED 300'. S REFERS TO THE DELINEATOR SPACING, IN FEET, FOR SPECIFIC RADII COMPUTED FROM THE FORMULA $S = 3\sqrt{R-50}$

SPECIFICATION REFERENCE	INTERSTATE ROAD EDGE DELINEATORS	VDOT ROAD AND BRIDGE STANDARDS
702	TYPICAL DETAILS VIRGINIA DEPARTMENT OF TRANSPORTATION	REVISION DATE 6-15-09 SHEET 1 OF 1 1327.20

MM-1

MOUNTING DETAIL

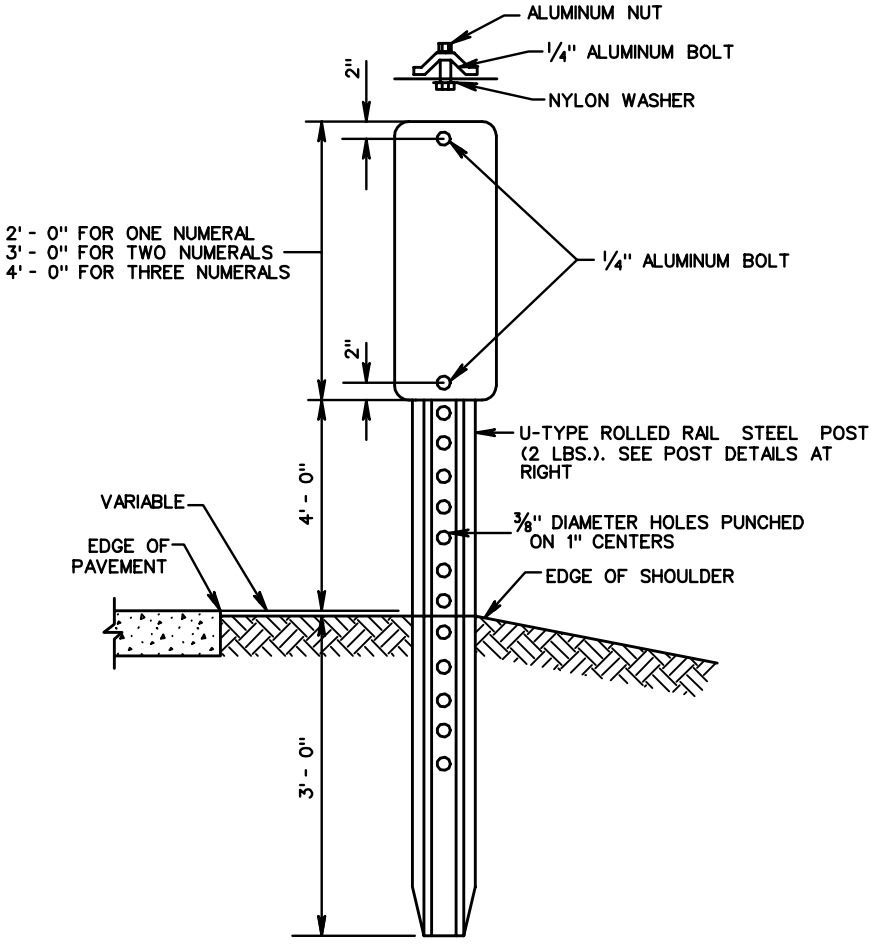

USP-1

SPLICING DETAIL

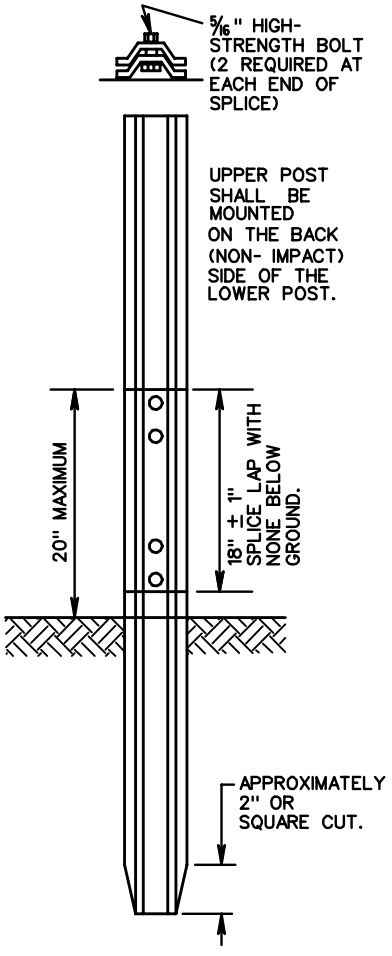

POST SECTION DIMENSIONS

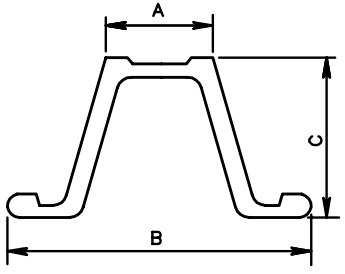

1.33 LB./LF

MINIMUM	MAXIMUM
A. 1/2"	1"
B. 2"	2 1/4"
C. 3/4"	1 1/4"

2.00 LB./LF

MINIMUM	MAXIMUM
A. 1 13/64 "	1 9/32 "
B. 3 1/16"	3 1/8"
C. 1 27/64 "	1 33/64 "

NOTES:

DRIVING CAP TO BE USED WHEN DRIVING POST.

PANEL TO BE FABRICATED OF ASTM B209 ALLOY 6061-T6 OR 5052-H38, 0.080 THICK.

TOP OF PANEL TO BE FLUSH WITH TOP OF POST.

ERECTION

MILEPOST MARKERS TO BE LOCATED IN LINE WITH DELINEATOR POSTS, EDGE OF SHOULDER OR BACK OF GUARDRAIL, IF PRESENT.

VDOT
ROAD AND BRIDGE STANDARDS

SHEET 1 OF 1 | REVISION DATE
1328.10

MILEPOST MARKERS & U-TYPE STEEL POST

TYPICAL STRUCTURE DETAILS

VIRGINIA DEPARTMENT OF TRANSPORTATION

SPECIFICATION REFERENCE
701
702

STANDARD

THIS PAGE INTENTIONALLY LEFT BLANK

SPECIFICATION REFERENCE	TITLE VIRGINIA DEPARTMENT OF TRANSPORTATION	VDOT ROAD AND BRIDGE STANDARDS REVISION DATE	SHEET 1 OF 1 ____._

ISD-1

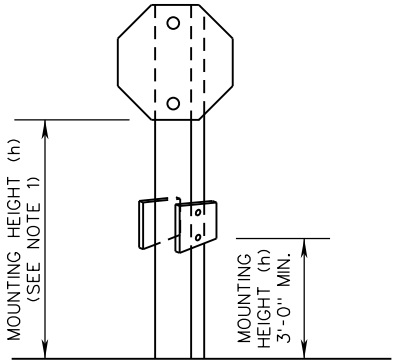

ONE WAY SIGNS
ON EXIT RAMPS
WITH STOP SIGN

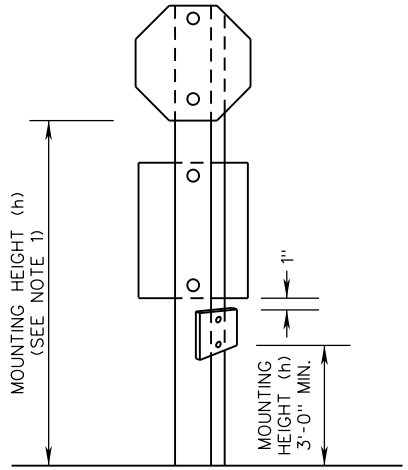

STOP OR YIELD SIGNS AND
DO NOT ENTER SIGN
(AT EXIT RAMPS ONLY)

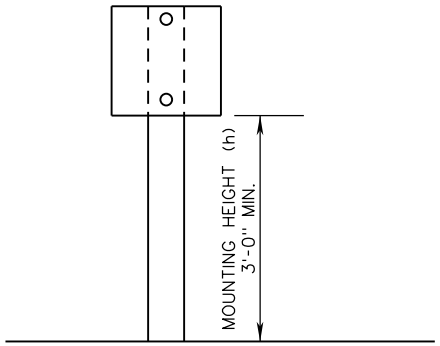

WRONG WAY SIGNS/
DO NOT ENTER SIGNS
(AT EXIT RAMPS ONLY)

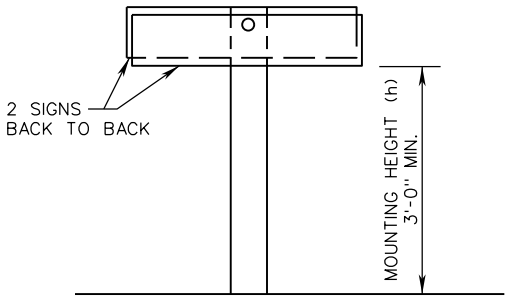

ONE WAY SIGNS
ON EXIT RAMPS

NOTES:

1. MOUNTING HEIGHT (h) SHALL BE IN ACCORDANCE WITH STP-1 SHEET 1 OF 12 EXCEPT AS NOTED ON THIS SHEET.
2. MOUNTING HEIGHTS (h) ARE MEASURED FROM BOTTOM OF SIGN PANEL TO ROADWAY ELEVATION AT EDGE OF TRAVELWAY OR TOP OF CURB.

A COPY OF THE ORIGINAL SEALED AND SIGNED DRAWING IS ON FILE IN THE CENTRAL OFFICE.

VDOT ROAD AND BRIDGE STANDARDS	INTERCHANGE EXIT RAMP SIGNING DETAILS MOUNTING HEIGHTS OF SIGN INSTALLATIONS VIRGINIA DEPARTMENT OF TRANSPORTATION	SPECIFICATION REFERENCE
SHEET 1 OF 1 / 1329.10	REVISION DATE NEW 08/17	700

PM-1

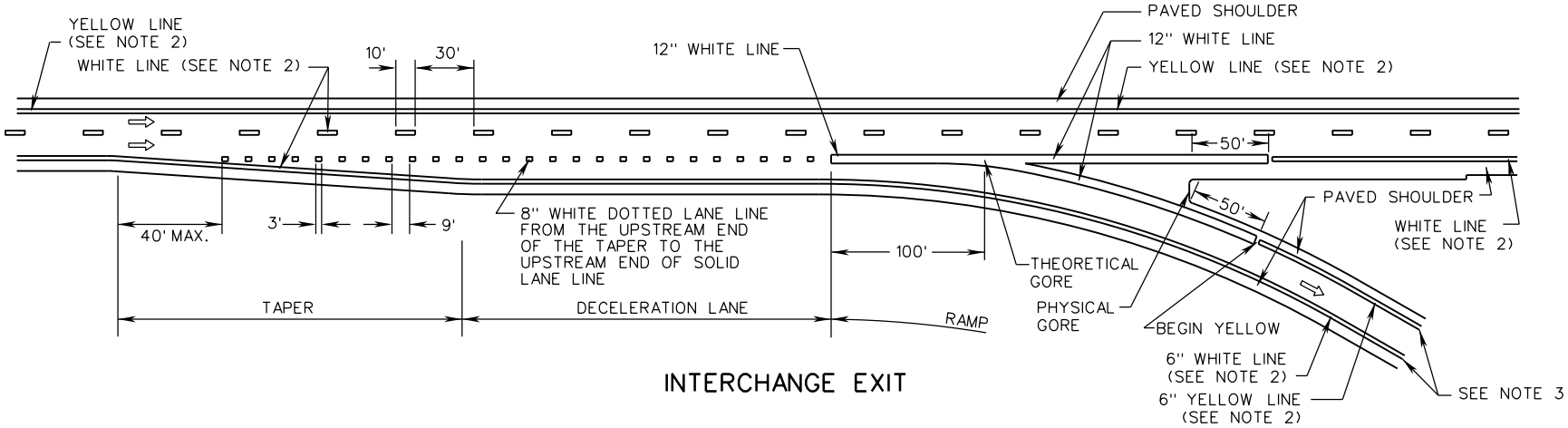

INTERCHANGE EXIT

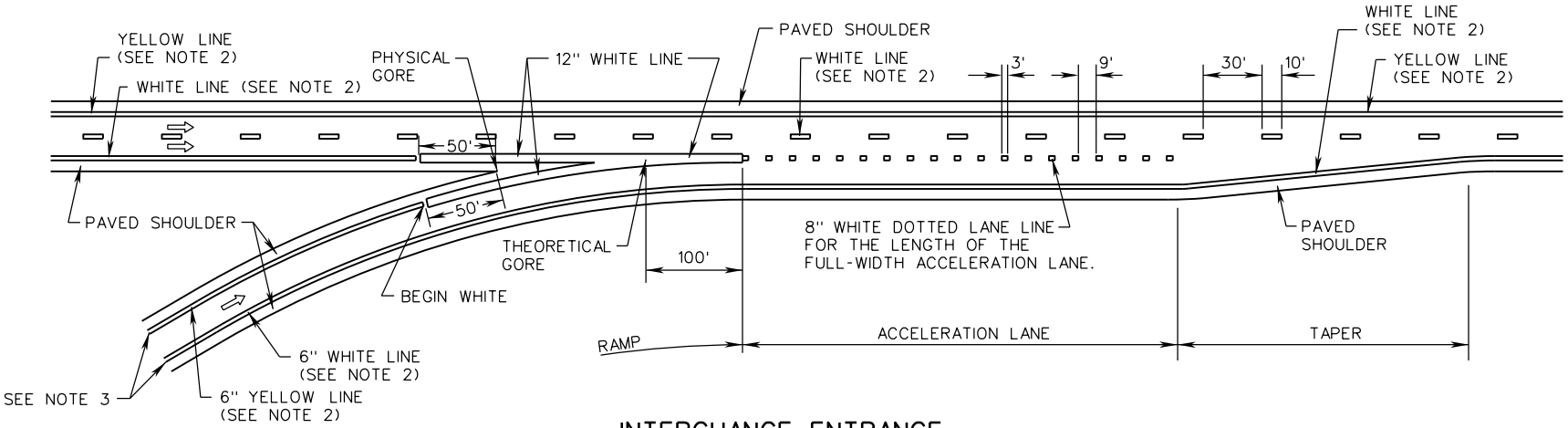

INTERCHANGE ENTRANCE

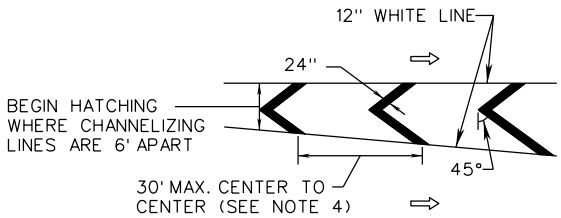

GORE AREA HATCHING (OPTIONAL)

⇨ INDICATES DIRECTION OF TRAVEL

NOTES:

1. ALL PAVEMENT MARKINGS SHALL BE INSTALLED IN ACCORDANCE WITH THESE STANDARDS, THE MUTCD, AND THE VIRGINIA SUPPLEMENT TO THE MUTCD, UNLESS OTHERWISE SPECIFIED IN THE CONTRACT DOCUMENTS.
2. THE PAVEMENT MARKING FOR THE LANE LINE AND EDGE LINE MARKINGS OF INTERSTATE AND OTHER LIMITED - ACCESS HIGHWAYS SHALL BE 6" WIDE, UNLESS OTHERWISE NOTED IN THE CONTRACT DOCUMENTS.
3. CONTINUE EDGELINE WIDTH TO THE TERMINATION POINT SPECIFIED IN THE CONTRACT DOCUMENTS.
4. IF GORE AREA HATCHING IS PROVIDED, THERE SHALL BE A MINIMUM OF THREE CHEVRONS. SPACING MAY BE REDUCED IN ORDER TO FIT THIS MINIMUM.

SPECIFICATION REFERENCE	A COPY OF THE ORIGINAL SEALED AND SIGNED DRAWING IS ON FILE IN THE CENTRAL OFFICE.	VDOT ROAD AND BRIDGE STANDARDS	
704	TYPICAL PAVEMENT MARKING INTERCHANGE VIRGINIA DEPARTMENT OF TRANSPORTATION	REVISION DATE 04/19	SHEET 1 OF 1 1330.10

PM-2

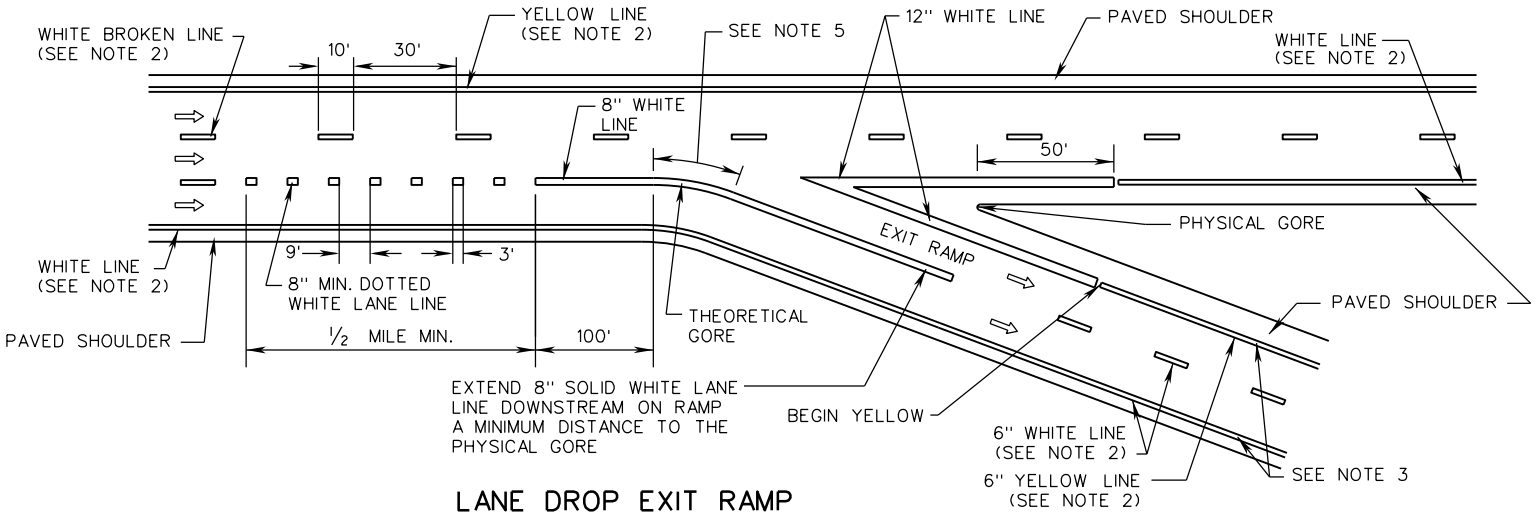

LANE DROP EXIT RAMP BESIDE OPTIONAL EXIT LANE

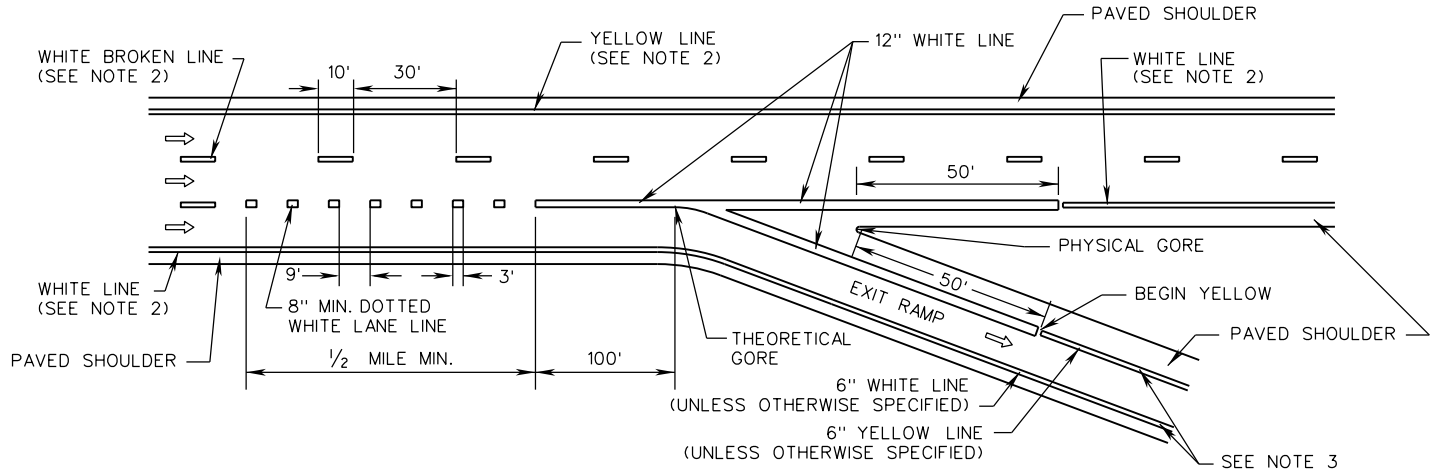

LANE DROP EXIT RAMP

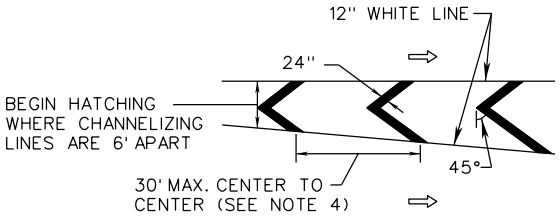

GORE AREA HATCHING (OPTIONAL)

⇨ INDICATES DIRECTION OF TRAVEL

NOTES:

1. ALL PAVEMENT MARKINGS SHALL BE INSTALLED IN ACCORDANCE WITH THESE STANDARDS, THE MUTCD AND THE VIRGINIA SUPPLEMENT TO THE MUTCD, UNLESS OTHERWISE SPECIFIED IN THE CONTRACT DOCUMENTS.
2. THE PAVEMENT MARKING FOR THE LANE LINE AND EDGE LINE MARKINGS OF INTERSTATE AND OTHER LIMITED - ACCESS HIGHWAYS SHALL BE 6" WIDE, UNLESS OTHERWISE NOTED IN THE CONTRACT DOCUMENTS.
3. CONTINUE EDGELINE WIDTH TO THE TERMINATION POINT SPECIFIED IN THE CONTRACT DOCUMENTS.
4. IF GORE AREA HATCHING IS PROVIDED, THERE SHALL BE A MINIMUM OF THREE CHEVRONS. SPACING MAY BE REDUCED IN ORDER TO FIT THIS MINIMUM.
5. SOLID LINE AT THEORETICAL GORE POINT OF A MULTILANE EXIT RAMP WITH OPTIONAL EXIT LANE SHALL BE CURVED TO MATCH RADIUS OF OFF RAMP (SHALL NOT BE SHARP CORNER).

VDOT ROAD AND BRIDGE STANDARDS	A COPY OF THE ORIGINAL SEALED AND SIGNED DRAWING IS ON FILE IN THE CENTRAL OFFICE.		SPECIFICATION REFERENCE
SHEET 1 OF 1	TYPICAL PAVEMENT MARKING INTERCHANGE LANE DROPS	REVISION DATE 04/19	704
1330.20	VIRGINIA DEPARTMENT OF TRANSPORTATION		

PATTERNS OF LONGITUDINAL LINES

THRU LANES: USE BROKEN LINE (10' LINE SEGMENTS / 30' GAPS).

TAPERS MORE THAN 100': USE DOTTED EXTENSION (2' LINE SEGMENTS / 6' GAPS).

TAPERS 100' OR LESS: DO NOT USE DOTTED EXTENSION UNLESS SPECIFIED IN THE CONTRACT DOCUMENTS.

NOTES:

1. STOP LINES SHALL BE 24 INCHES IN WIDTH.
2. ALL PAVEMENT MARKINGS SHALL BE INSTALLED IN ACCORDANCE WITH THESE STANDARDS, THE MUTCD, AND THE VIRGINIA SUPPLEMENT TO THE MUTCD, UNLESS OTHERWISE SPECIFIED IN THE CONTRACT DOCUMENTS.
3. THE LOCATION, WIDTH, AND TYPE OF THE PAVEMENT MARKINGS SHALL BE AS SPECIFIED IN THE CONTRACT DOCUMENTS.
4. TURN ARROWS SHALL BE IN ACCORDANCE WITH SHEET 3.
5. CROSSWALK MARKINGS, IF PROVIDED, SHALL BE IN ACCORDANCE WITH SHEET 4.
6. YELLOW EDGE LINES AT MEDIAN NOSES SHALL TERMINATE IN ACCORDANCE WITH SHEET 3.

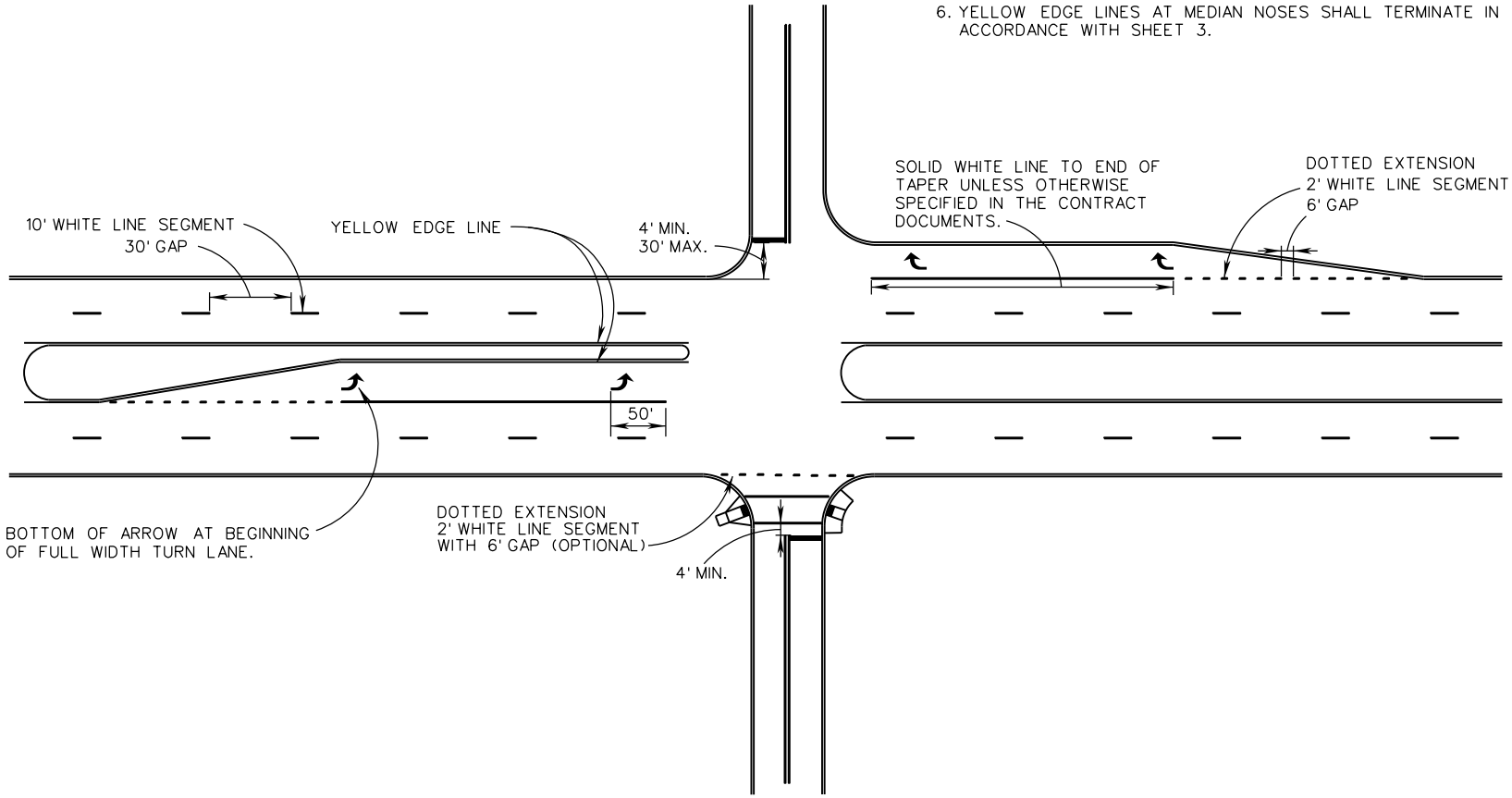

SPECIFICATION REFERENCE	A COPY OF THE ORIGINAL SEALED AND SIGNED DRAWING IS ON FILE IN THE CENTRAL OFFICE.	VDOT ROAD AND BRIDGE STANDARDS	
704	TYPICAL PAVEMENT MARKING UNSIGNALIZED INTERSECTIONS VIRGINIA DEPARTMENT OF TRANSPORTATION	REVISION DATE 04/19	SHEET 1 OF 4 1330.30

PM-3

NOTES:

1. STOP LINES SHALL BE 24 INCHES IN WIDTH.
2. ALL PAVEMENT MARKINGS SHALL BE INSTALLED IN ACCORDANCE WITH THESE STANDARDS, THE MUTCD, AND THE VIRGINIA SUPPLEMENT TO THE MUTCD, UNLESS OTHERWISE SPECIFIED IN THE CONTRACT DOCUMENTS.
3. THE LOCATION, WIDTH, AND TYPE OF THE PAVEMENT MARKINGS SHALL BE AS SPECIFIED IN THE CONTRACT DOCUMENTS.
4. TURN ARROWS SHALL BE IN ACCORDANCE WITH SHEET 3.
5. CROSSWALK MARKINGS, IF PROVIDED, SHALL BE IN ACCORDANCE WITH SHEET 4.
6. YELLOW EDGE LINES AT MEDIAN NOSES SHALL TERMINATE IN ACCORDANCE WITH SHEET 3.

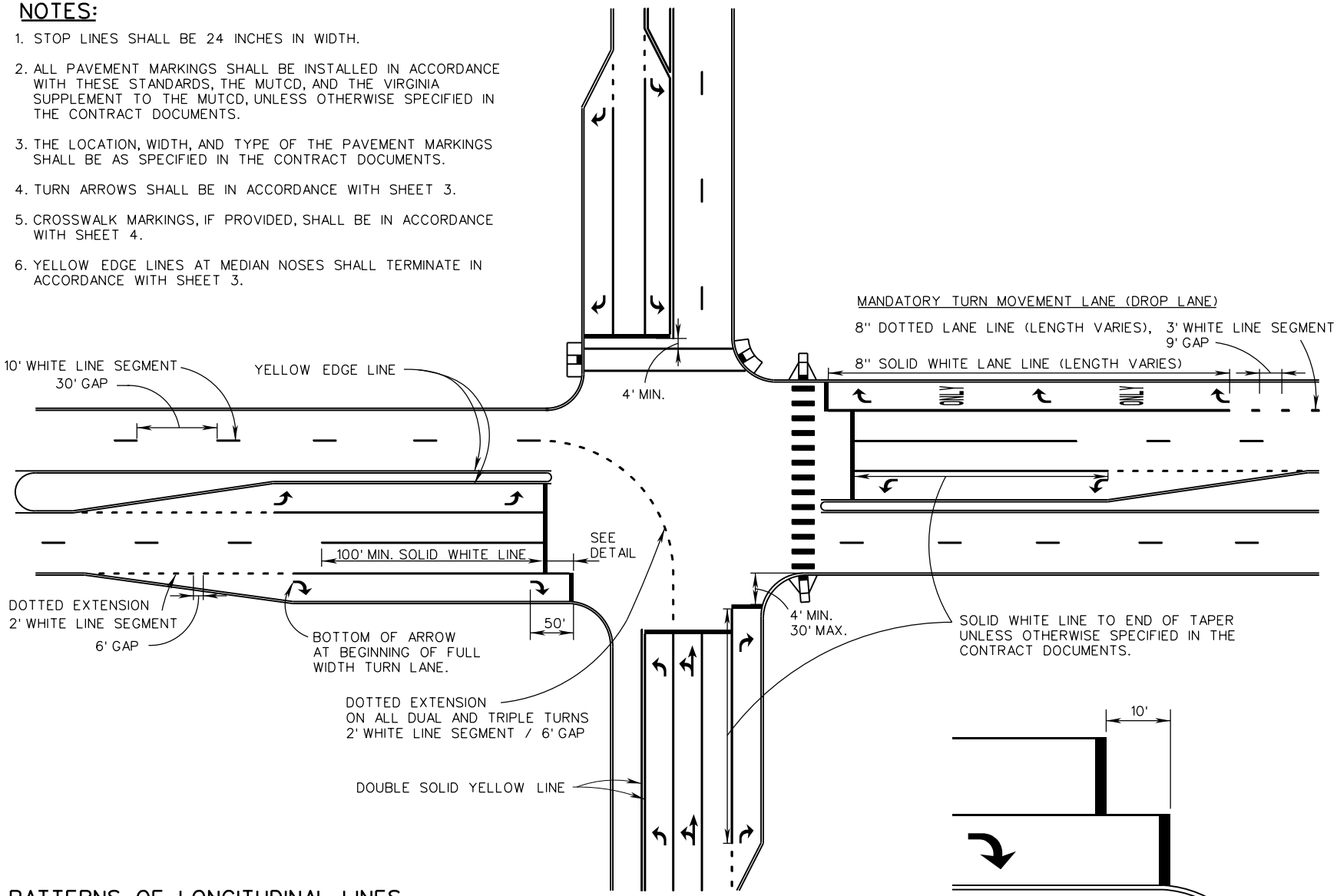

DETAIL FOR OPTIONAL STAGGERED STOP LINES (ON A LANE-BY-LANE BASIS)

PATTERNS OF LONGITUDINAL LINES

THRU LANES: USE BROKEN LINE (10' LINE SEGMENTS / 30' GAPS).

TAPERS MORE THAN 100': USE DOTTED EXTENSION (2' LINE SEGMENTS / 6' GAPS).

TAPERS 100' OR LESS: DO NOT USE DOTTED EXTENSION UNLESS SPECIFIED IN THE CONTRACT DOCUMENTS.

VDOT ROAD AND BRIDGE STANDARDS	A COPY OF THE ORIGINAL SEALED AND SIGNED DRAWING IS ON FILE IN THE CENTRAL OFFICE.		SPECIFICATION REFERENCE
SHEET 2 OF 4	TYPICAL PAVEMENT MARKING		704
1330.31	SIGNALIZED INTERSECTIONS	REVISION DATE 04/19	
	VIRGINIA DEPARTMENT OF TRANSPORTATION		

TURN ARROWS

TURN ARROWS REQUIRED IN ACCORDANCE WITH THE FOLLOWING, UNLESS OTHERWISE SPECIFIED IN THE CONTRACT DOCUMENTS.

TURN LANE LENGTH	NUMBER AND POSITION OF ARROWS
LESS THAN 100' (EXCLUSIVE OF TAPER): 1 ARROW	1 ARROW LOCATED AT THE BEGINNING OF THE SOLID LANE LINE.
100' TO 300' (EXCLUSIVE OF TAPER): 2 ARROWS	1 ARROW LOCATED AT BEGINNING OF FULL WIDTH TURN LANE. 1 ARROW LOCATED 50' BACK FROM STOP LINE OR END OF LANE LINE.
GREATER THAN 300' (EXCLUSIVE OF TAPER): 3 ARROWS	1 ARROW LOCATED AT BEGINNING OF FULL WIDTH TURN LANE. 1 ARROW LOCATED 50' BACK FROM STOP LINE OR END LANE LINE. 1 ARROW LOCATED AT MIDPOINT BETWEEN THE OTHER TWO ARROWS.

NOTES:

1. ALL PAVEMENT MARKINGS SHALL BE INSTALLED IN ACCORDANCE WITH THESE STANDARDS, THE MUTCD, AND THE VIRGINIA SUPPLEMENT TO THE MUTCD, UNLESS OTHERWISE SPECIFIED IN THE CONTRACT DOCUMENTS.
2. THE LOCATION, WIDTH, AND TYPE OF THE PAVEMENT MARKINGS SHALL BE AS SPECIFIED IN THE CONTRACT DOCUMENTS.
3. WHEN "ONLY" WORD MARKINGS ARE USED, THESE MARKINGS SHALL BE SPACED MIDWAY BETWEEN THE TURN ARROWS.
4. CROSSWALK MARKINGS, IF PROVIDED, SHALL BE IN ACCORDANCE WITH SHEET 4.

MANDATORY TURN MOVEMENT LANES (DROP LANE)

MARKINGS REQUIRED IN ACCORDANCE WITH THE FOLLOWING, UNLESS OTHERWISE SPECIFIED IN THE CONTRACT DOCUMENTS.

TURN ARROWS	1 ARROW LOCATED AT BEGINNING WIDE WHITE SOLID LANE LINE. 1 ARROW LOCATED 50' BACK FROM STOP LINE. 1 ARROW LOCATED AT MIDPOINT OF 8" WHITE SOLID LANE LINE.
ONLY WORD MARKINGS	SPACED MIDWAY BETWEEN ARROWS.

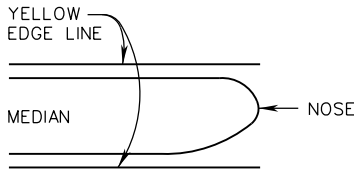

DETAIL FOR YELLOW EDGE LINES AT MEDIANS

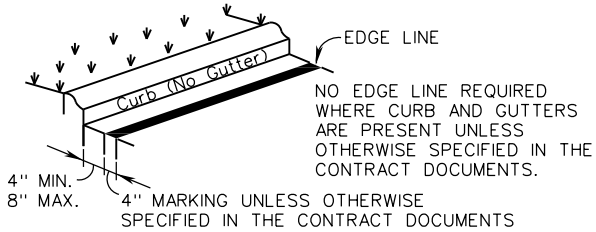

DETAIL FOR LOCATION OF EDGE LINES ON CURB SECTIONS OF ROADWAY (NO GUTTER)

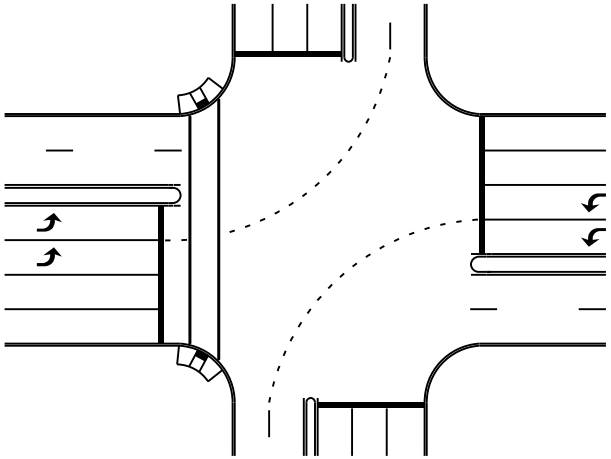

DETAIL FOR DOTTED EXTENSION THROUGH INTERSECTION AT DUAL TURN LANES

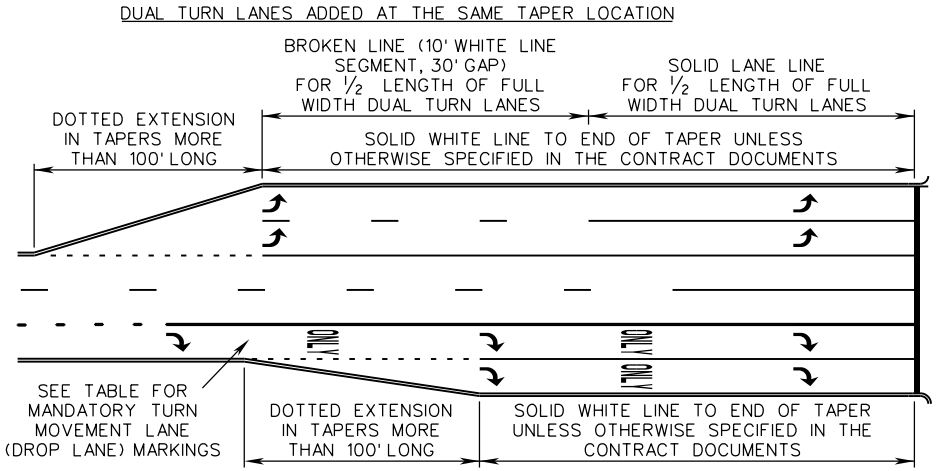

DETAIL FOR LANE LINE MARKINGS AT DUAL TURN LANES

SPECIFICATION REFERENCE	A COPY OF THE ORIGINAL SEALED AND SIGNED DRAWING IS ON FILE IN THE CENTRAL OFFICE.	VDOT ROAD AND BRIDGE STANDARDS
704	TYPICAL PAVEMENT MARKING INTERSECTION DETAILS VIRGINIA DEPARTMENT OF TRANSPORTATION	REVISION DATE 04/19 SHEET 3 OF 4 1330.32

PM-3

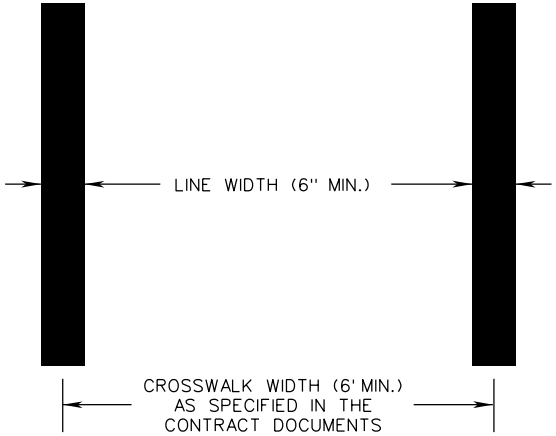

CROSSWALK WIDTH
(TRANSVERSE LINES)

NOTES:

1. ALL PAVEMENT MARKINGS SHALL BE INSTALLED IN ACCORDANCE WITH THESE STANDARDS, THE MUTCD AND THE VIRGINIA SUPPLEMENT TO THE MUTCD, UNLESS OTHERWISE SPECIFIED IN THE CONTRACT DOCUMENTS.
2. THE LOCATION, WIDTH, AND TYPE OF THE PAVEMENT MARKINGS SHALL BE AS SPECIFIED IN THE CONTRACT DOCUMENTS.
3. CROSSWALKS SHALL ALIGN WITH CURB RAMPS IN ACCORDANCE WITH STANDARD CG-12. THE CROSSWALK SHALL BE AT LEAST AS WIDE AS THE LEVEL LANDING AREA OF THE CURB RAMP.
4. WHEN LONGITUDINAL LINES ARE SPECIFIED FOR THE CROSSWALK, THE LONGITUDINAL LINES SHALL BE PARALLEL TO THE PATH OF THRU TRAFFIC.
5. GAPS BETWEEN LONGITUDINAL LINES SHALL BE BETWEEN 2 - 5 FEET. GAP SPACING MAY VARY IN ORDER TO ALIGN LINES SUCH THAT THEY ARE OUTSIDE THE WHEEL PATHS OF THRU TRAFFIC. THE FIRST AND LAST LINES SHALL BE 2' MAXIMUM FROM EDGE OF SHOULDER OR EDGE OF GUTTER PAN.

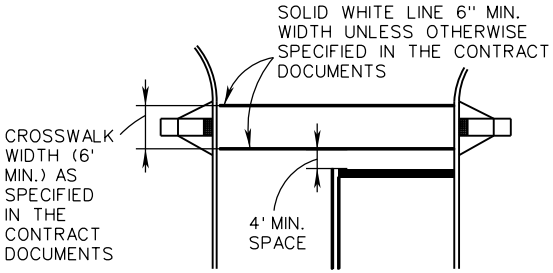

TRANSVERSE LINES

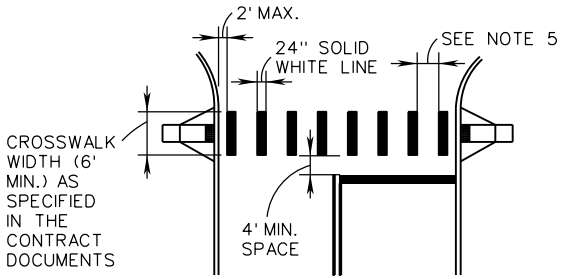

LONGITUDINAL LINES

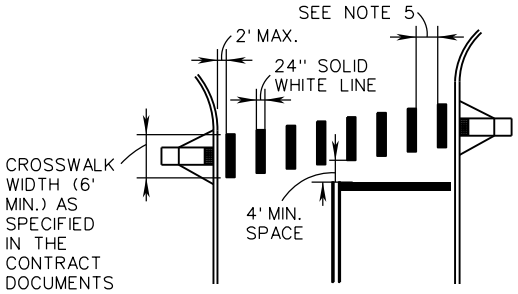

LONGITUDINAL LINES
AT SKEWED INTERSECTIONS
(SEE NOTE 4)

VDOT ROAD AND BRIDGE STANDARDS	A COPY OF THE ORIGINAL SEALED AND SIGNED DRAWING IS ON FILE IN THE CENTRAL OFFICE.		SPECIFICATION REFERENCE
SHEET 4 OF 4	TYPICAL PAVEMENT MARKING	REVISION DATE	
1330.33	CROSSWALK MARKINGS	NEW 01/15	704
	VIRGINIA DEPARTMENT OF TRANSPORTATION		

NOTES:

1. ALL PAVEMENT MARKINGS SHALL BE INSTALLED IN ACCORDANCE WITH THESE STANDARDS, THE MUTCD, AND THE VIRGINIA SUPPLEMENT TO THE MUTCD, UNLESS OTHERWISE SPECIFIED IN THE CONTRACT DOCUMENTS.
2. TAPER LENGTH SHALL BE PER THESE STANDARDS UNLESS OTHERWISE SPECIFIED IN THE CONTRACT DOCUMENTS.
3. TAPERS MORE THAN 100': USE DOTTED EXTENSION (2' LINE SEGMENTS / 6' GAPS).
   TAPERS 100' OR LESS: DO NOT USE DOTTED EXTENSION UNLESS SPECIFIED IN THE CONTRACT DOCUMENTS.
4. TURN ARROWS SHALL BE IN ACCORDANCE WITH PM-3.
5. LONGITUDINAL LINES SHALL BE 4" WIDE UNLESS OTHERWISE NOTED IN THE CONTRACT DOCUMENTS.

TAPER LENGTH (T) TABLE

		T		
SPEED	TAPER RATIO	10 FT TURN LANE WIDTH	11 FT TURN LANE WIDTH	12 FT TURN LANE WIDTH
≤ 30 MPH	8:1	80'	90'	100'
> 30 MPH	15:1	150'	175'	200'

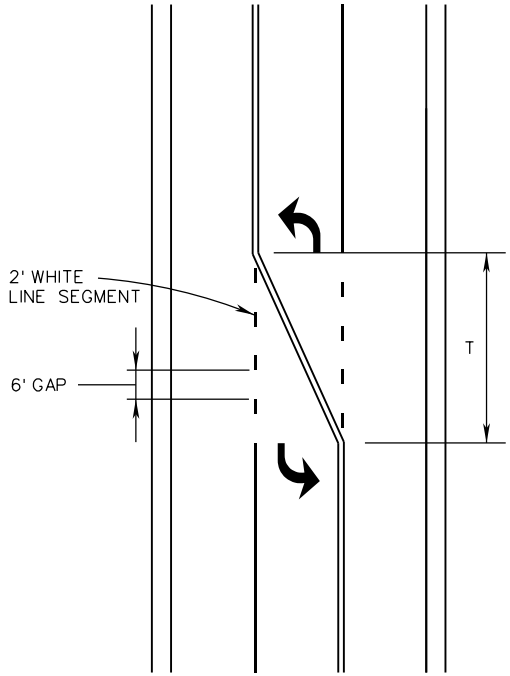

SPECIFICATION REFERENCE	A COPY OF THE ORIGINAL SEALED AND SIGNED DRAWING IS ON FILE IN THE CENTRAL OFFICE.	VDOT ROAD AND BRIDGE STANDARDS
704	TYPICAL PAVEMENT MARKING LEFT TURN PAVEMENT MARKED MEDIAN VIRGINIA DEPARTMENT OF TRANSPORTATION	REVISION DATE 04/19 SHEET 1 OF 2 1330.50

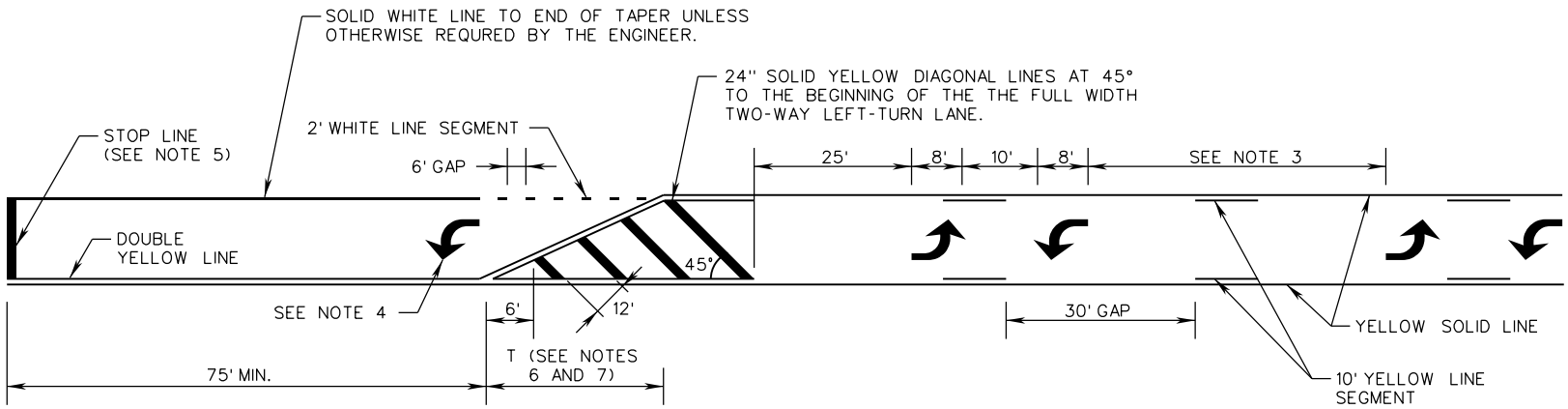

TYPE A

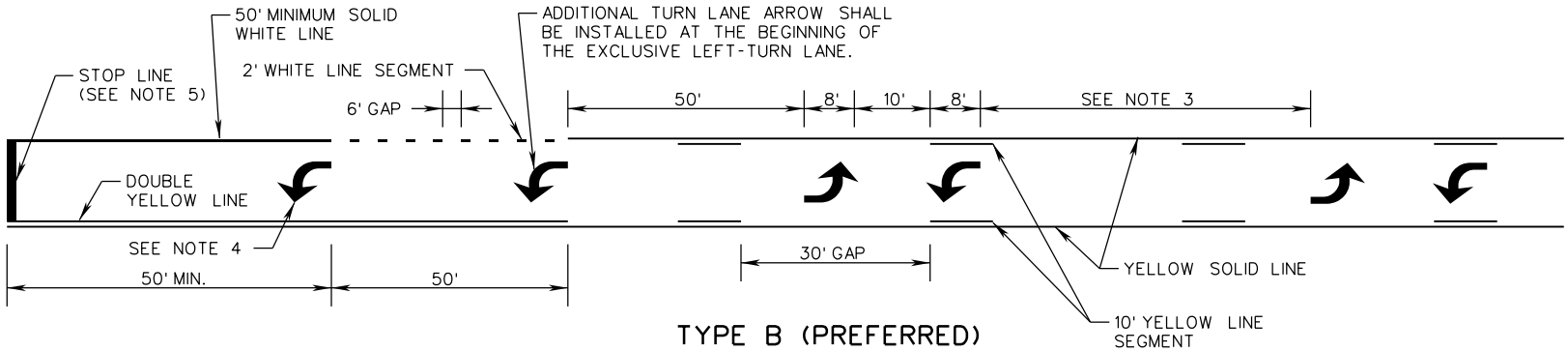

TYPE B (PREFERRED)

NOTES:

1. ALL PAVEMENT MARKINGS SHALL BE INSTALLED IN ACCORDANCE WITH THESE STANDARDS, THE MUTCD, AND THE VIRGINIA SUPPLEMENT TO THE MUTCD, UNLESS OTHERWISE SPECIFIED IN THE CONTRACT DOCUMENTS.
2. LONGITUDINAL LINES SHALL BE 4" WIDE UNLESS OTHERWISE NOTED IN THE CONTRACT DOCUMENTS.
3. TYPICAL SPACING BETWEEN OPPOSING TURN ARROWS SHALL BE 1000 FEET. SPACING CAN BE INCREASED OR DECREASED AS DETERMINED BY THE ENGINEER.
4. TURN ARROWS SHALL BE IN ACCORDANCE WITH PM-3.
5. STOP LINES SHALL BE 24 INCHES IN WIDTH. STOP LINES SHALL ONLY BE USED AT SIGNALIZED INTERSECTIONS OR ON STOP-CONTROLLED APPROACHES.
6. REFER TO THE TAPER LENGTH TABLE ON SHEET 1 FOR "T". TAPER LENGTH SHALL BE AS SPECIFIED IN THE CONTRACT DOCUMENTS.
7. TAPERS MORE THAN 100': USE DOTTED EXTENSION (2' LINE SEGMENTS / 6' GAPS). TAPERS 100' OR LESS: DO NOT USE DOTTED EXTENSION UNLESS SPECIFIED IN THE CONTRACT DOCUMENTS.

VDOT ROAD AND BRIDGE STANDARDS	A COPY OF THE ORIGINAL SEALED AND SIGNED DRAWING IS ON FILE IN THE CENTRAL OFFICE.		SPECIFICATION REFERENCE
SHEET 2 OF 2	TYPICAL PAVEMENT MARKING	REVISION DATE	704
1330.51	TWO-WAY LEFT-TURN LANE	04/19	
	VIRGINIA DEPARTMENT OF TRANSPORTATION		

STANDARD

THIS PAGE INTENTIONALLY LEFT BLANK

SPECIFICATION REFERENCE	TITLE VIRGINIA DEPARTMENT OF TRANSPORTATION	VDOT ROAD AND BRIDGE STANDARDS REVISION DATE	SHEET 1 OF 1 ____._

PM-6

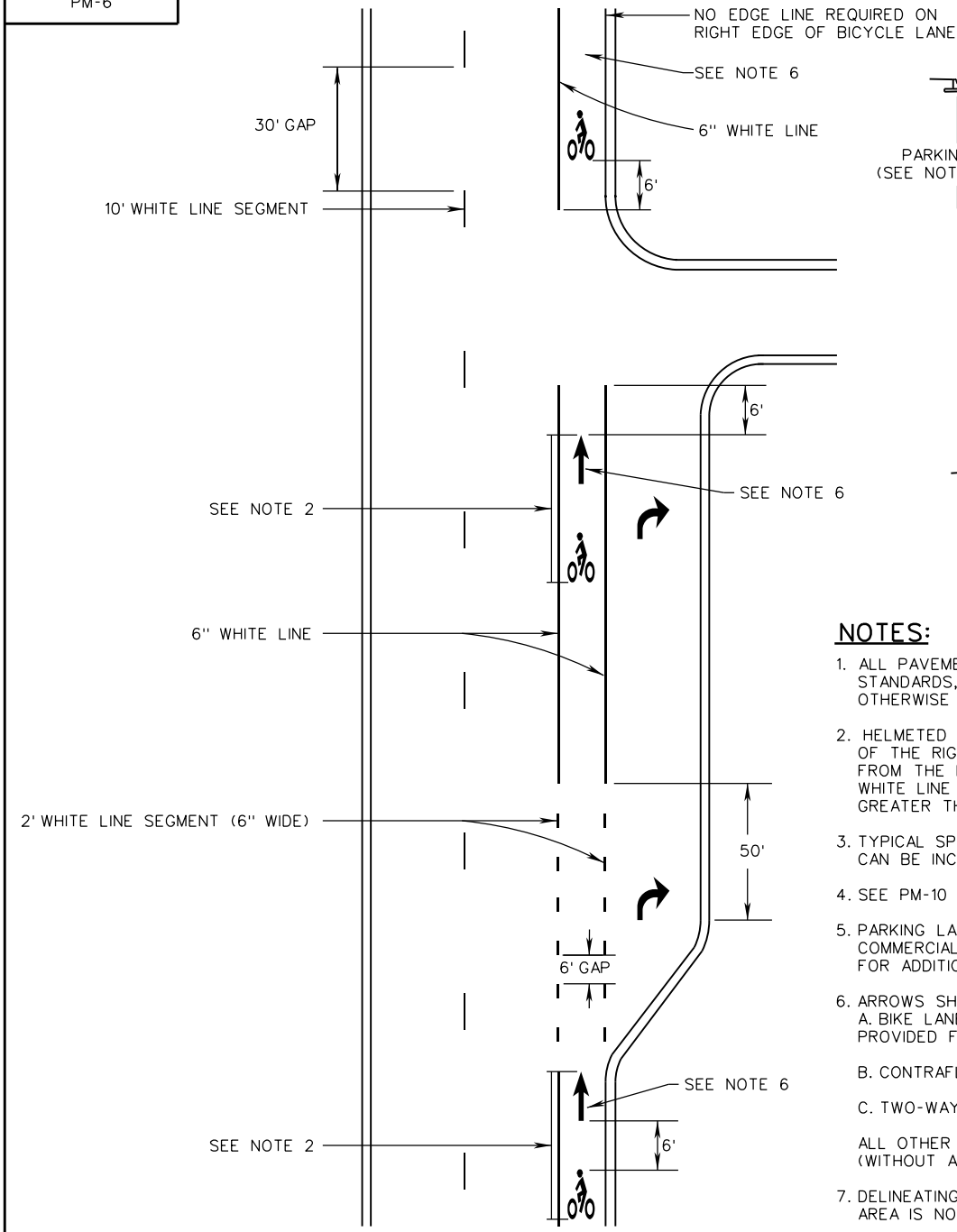

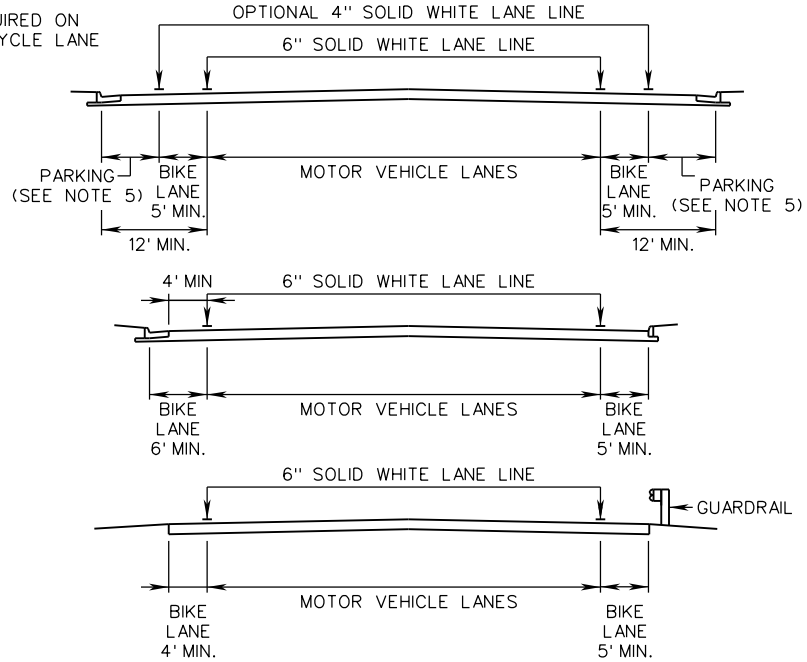

TYPICAL BIKE LANE CROSS SECTIONS

NOTES:

1. ALL PAVEMENT MARKINGS SHALL BE INSTALLED IN ACCORDANCE WITH THESE STANDARDS, THE MUTCD, AND THE VIRGINIA SUPPLEMENT TO THE MUTCD, UNLESS OTHERWISE SPECIFIED IN THE CONTRACT DOCUMENTS.

2. HELMETED BICYCLIST SYMBOL SHALL BE PLACED JUST PRIOR TO THE BEGINNING OF THE RIGHT TURN LANE TAPER AS SHOWN. THEY SHALL ALSO BE PLACED 6' FROM THE END OF THE SOLID WHITE LINE AT RIGHT TURN LANES IF THE SOLID WHITE LINE SEPARATING THE BICYCLE LANE FROM THE RIGHT TURN LANE IS GREATER THAN 100' IN LENGTH.

3. TYPICAL SPACING BETWEEN BICYCLE LANE SYMBOLS SHALL BE 500 FT. SPACING CAN BE INCREASED OR DECREASED AS DIRECTED BY THE ENGINEER.

4. SEE PM-10 FOR HELMETED BICYCLIST SYMBOL AND ARROW DETAILS.

5. PARKING LANE WIDTH SHALL BE 7' FOR RESIDENTIAL STREETS AND 8' FOR COMMERCIAL AND MIXED-USE STREETS. REFER TO THE VDOT ROAD DESIGN MANUAL FOR ADDITIONAL REQUIREMENTS.

6. ARROWS SHALL BE USED FOR:
   A. BIKE LANES ON UNDIVIDED TWO-WAY STREETS WHERE A BIKE LANE IS ONLY PROVIDED FOR ONE DIRECTION OF TRAVEL, OR

   B. CONTRAFLOW BIKE LANES, OR

   C. TWO-WAY CYCLE TRACKS

   ALL OTHER BIKE LANES SHALL JUST USE THE HELMETED CYCLIST SYMBOL (WITHOUT ARROW)

7. DELINEATING BICYCLE LANES WITH THE LIMITS OF A REQUIRED PAVED SHOULDER AREA IS NOT PERMITED.

VDOT ROAD AND BRIDGE STANDARDS	A COPY OF THE ORIGINAL SEALED AND SIGNED DRAWING IS ON FILE IN THE CENTRAL OFFICE.		SPECIFICATION REFERENCE
SHEET 1 OF 2	TYPICAL PAVEMENT MARKING	REVISION DATE 04/19	704
1330.60	BICYCLE LANE		
	VIRGINIA DEPARTMENT OF TRANSPORTATION		

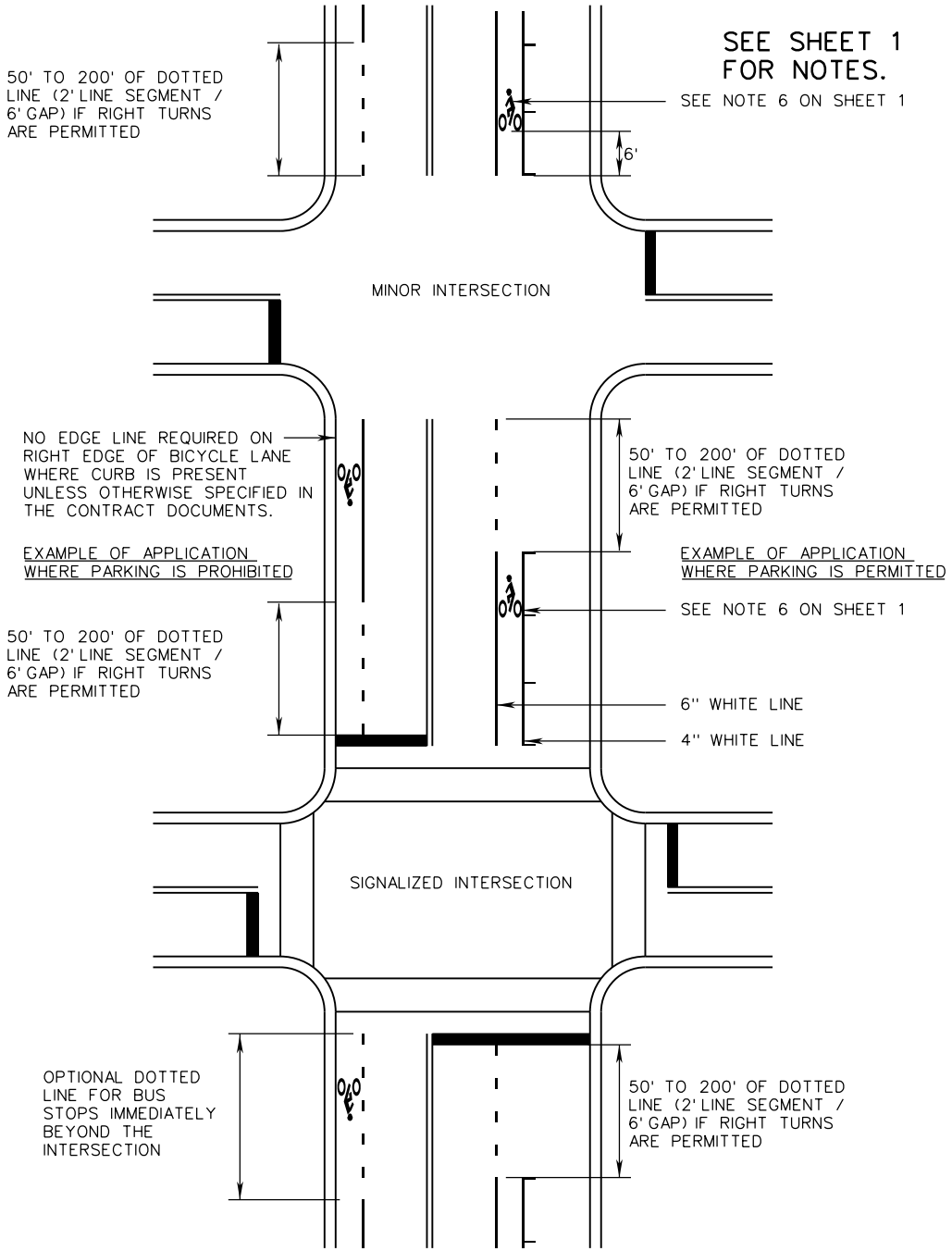

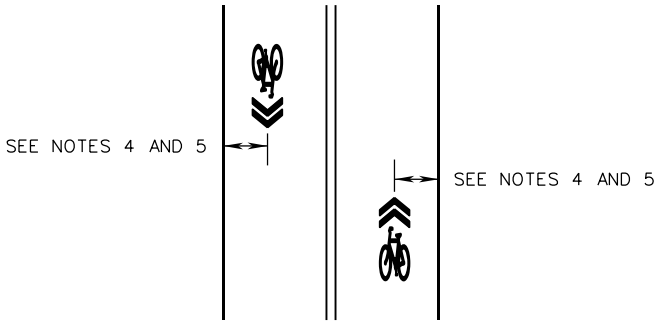

MARKED SHARED LANE

NOTES:

1. ALL PAVEMENT MARKINGS SHALL BE INSTALLED IN ACCORDANCE WITH THESE STANDARDS, THE MUTCD, AND THE VIRGINIA SUPPLEMENT TO THE MUTCD, UNLESS OTHERWISE SPECIFIED IN THE CONTRACT DOCUMENTS.
2. SHARED LANE MARKINGS SHALL NOT BE USED IN PAVED SHOULDERS, IN BICYCLE LANES, OR ON ROADWAYS THAT HAVE A SPEED LIMIT ABOVE 35 MPH.
3. SHARED LANE MARKINGS SHALL BE PLACED IMMEDIATELY AFTER AN INTERSECTION AND SPACED AT INTERVALS NOT GREATER THAN 1000 FEET.
4. IN SHARED LANES WITH ON-STREET PARALLEL PARKING, THE CENTER OF THE SHARED LANE MARKINGS SHALL BE AT LEAST 11' FROM THE FACE OF CURB, OR FROM THE EDGE OF PAVEMENT WHERE THERE IS NO CURB.
5. ON STREETS WITHOUT ON-STREET PARKING AND AN OUTSIDE TRAVEL LANE LESS THAN 14' WIDE, THE CENTER OF THE SHARED LANE MARKINGS SHALL BE AT LEAST 4' FROM THE FACE OF CURB, OR FROM THE EDGE OF PAVEMENT WHERE THERE IS NO CURB.
6. SEE PM-10 FOR SHARED LANE MARKING SYMBOL DETAILS.

SPECIFICATION REFERENCE	A COPY OF THE ORIGINAL SEALED AND SIGNED DRAWING IS ON FILE IN THE CENTRAL OFFICE.	VDOT ROAD AND BRIDGE STANDARDS	
704	TYPICAL PAVEMENT MARKING BICYCLE LANE AND MARKED SHARED LANE VIRGINIA DEPARTMENT OF TRANSPORTATION	REVISION DATE 04/19	SHEET 2 OF 2 1330.61

STANDARD

THIS PAGE INTENTIONALLY LEFT BLANK

VDOT
ROAD AND BRIDGE STANDARDS

SHEET 1 OF 1

REVISION DATE

TITLE

VIRGINIA DEPARTMENT OF TRANSPORTATION

SPECIFICATION REFERENCE

IN AN EFFORT TO SIMPLIFY THE FIGURE TO SHOW WARNING SIGN AND PAVEMENT MARKING PLACEMENT, NOT ALL REQUIRED TRAFFIC CONTROL DEVICES ARE SHOWN.

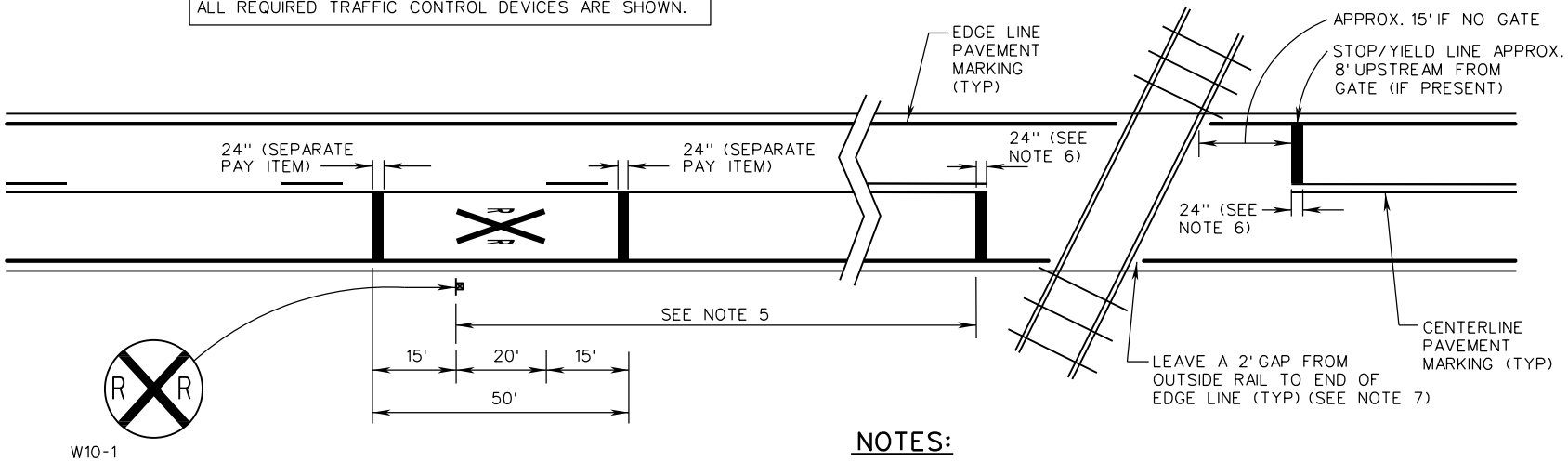

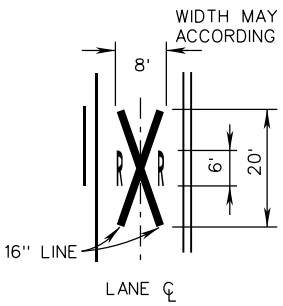

A PORTION OF THE PAVEMENT MARKING SYMBOL SHOULD BE DIRECTLY OPPOSITE THE ADVANCE WARNING SIGN (W10-1). IF NEEDED, SUPPLEMENTAL PAVEMENT MARKING SYMBOLS MAY BE PLACED BETWEEN THE ADVANCE WARNING SIGN AND THE CROSSING, BUT SHOULD BE AT LEAST 50' FROM THE STOP OR YIELD LINE.

NOTES:

1. ALL PAVEMENT MARKINGS SHALL BE INSTALLED IN ACCORDANCE WITH THESE STANDARDS, THE MUTCD, AND THE VIRGINIA SUPPLEMENT TO THE MUTCD, UNLESS OTHERWISE SPECIFIED IN THE CONTRACT DOCUMENTS.
2. ON MULTI-LANE ROADS THE TRANSVERSE BANDS SHALL EXTEND ACROSS ALL APPROACH LANES, AND INDIVIDUAL RAILROAD CROSSING (RXR) SYMBOLS SHALL BE USED IN EACH APPROACH LANE.
3. SEE PM-10 FOR RAILROAD CROSSING (RXR) SYMBOLS DETAILS.
4. REFER TO THE MUTCD FOR SIGNING REQUIREMENTS AT PASSIVE GRADE CROSSINGS (NO AUTOMATED TRAFFIC CONTROL DEVICES).
5. THE PLACEMENT OF THE GRADE CROSSING ADVANCE WARNING (W10-1) SIGN SHALL BE IN ACCORDANCE WITH SECTION 2C.05 AND TABLE 2C-4 (CONDITION B) OF THE MUTCD.
6. YIELD LINES MAY BE USED INSTEAD OF STOP LINES AT PASSIVE GRADE CROSSINGS WITH YIELD SIGNS INSTALLED.
7. ALL EDGE LINES SHALL EXTEND WITHIN TWO FEET OF THE OUTSIDE RAIL, EXCEPT LINES SHALL TERMINATE AT THE STOP OR YIELD LINE IF THE CROSSING IS SIGNED WITH A W10-5 HUMPED XING SIGN.
8. EXTEND RXR SYMBOL MARKINGS 6 INCHES FROM THE EDGE OF PAVEMENT TO 8 INCHES FROM THE CENTER LINE OF THE ROADWAY OR POSTION THE MARKINGS TO ACCOMODATE FUTURE PLACEMENT OF CENTER AND EDGE LINE PAVEMENT MARKINGS WHERE THESE MARKINGS DO NOT EXIST.

SPECIFICATION REFERENCE	A COPY OF THE ORIGINAL SEALED AND SIGNED DRAWING IS ON FILE IN THE CENTRAL OFFICE.	VDOT ROAD AND BRIDGE STANDARDS	
704	TYPICAL PAVEMENT MARKING RAILROAD - HIGHWAY GRADE CROSSING VIRGINIA DEPARTMENT OF TRANSPORTATION	REVISION DATE 04/19	SHEET 1 OF 1 1330.70

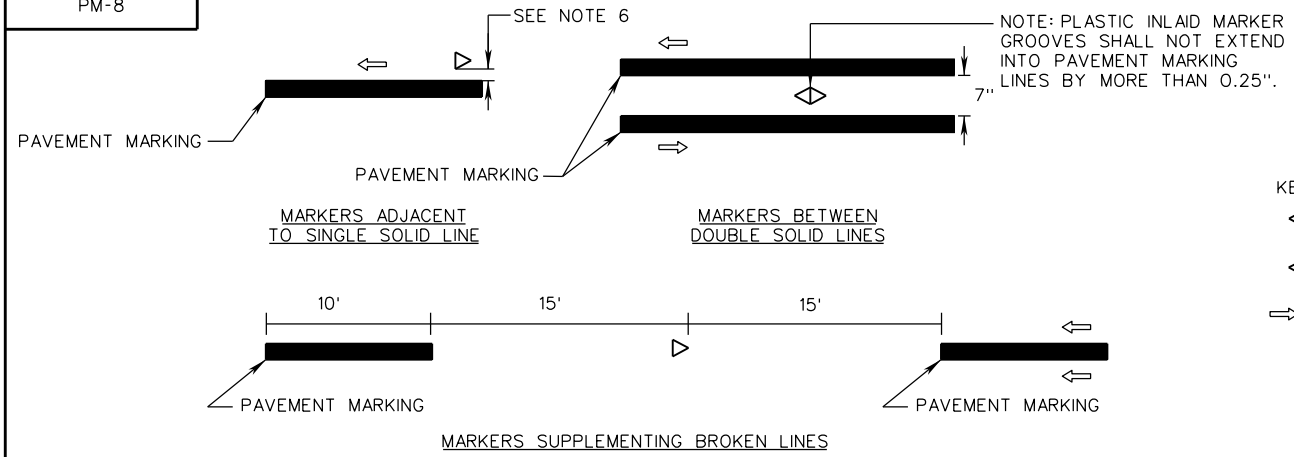

KEY:

- TWO WAY PAVEMENT MARKER, WITH POINTS INDICATING RETROREFLECTIVE FACE
- ONE WAY PAVEMENT MARKER, WITH POINT INDICATING RETROREFLECTIVE FACE
- INDICATES DIRECTION OF TRAVEL

GENERAL PLACEMENT

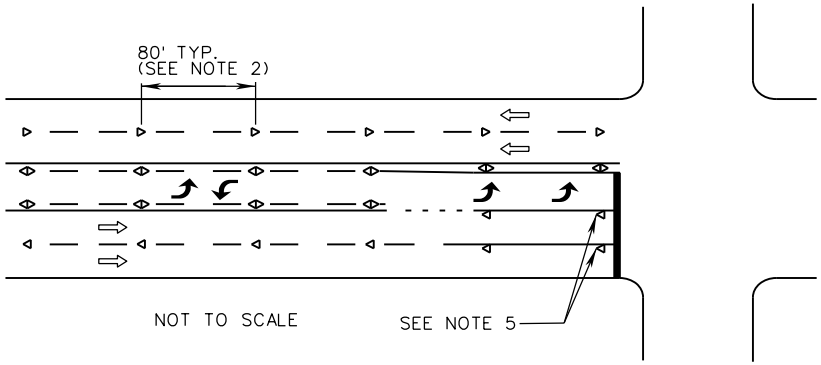

NOTES:

1. EXACT LOCATIONS OF THE MARKERS SHALL BE APPROVED BY THE ENGINEER PRIOR TO INSTALLATION.
2. TYPICAL SPACING SHALL BE 80' C-C. 40' C-C SPACING SHALL BE USED ON HORIZONTAL CURVES WITH A CURVE ADVISORY SPEED AT LEAST 10 MPH BELOW THE POSTED OR STATUTORY SPEED LIMIT, UNLESS OTHERWISE SHOWN IN THE CONTRACT DOCUMENTS OR AS DIRECTED BY THE ENGINEER. SEE SHEET 2 FOR SPECIFIC TYPICALS.
3. PAVEMENT MARKERS SHALL BE THE SAME COLOR AS THE ADJACENT PAVEMENT MARKING. THE COLOR OF THE BACKSIDE OF PAVEMENT MARKERS SHALL BE AS SHOWN IN THE TABLE BELOW.
4. INLAID PAVEMENT MARKERS SHALL BE OMITTED ON BRIDGE DECKS UNLESS OTHERWISE NOTED IN THE CONTRACT DOCUMENTS.
5. INLAID PAVEMENT MARKER GROOVES SHALL NOT ENCROACH INTO OR BEYOND THE STOP LINE.
6. PLASTIC INLAID MARKER GROOVES SHALL BE 1"- 2" FROM MARKING EDGE WHEN PLACED ADJACENT TO SINGLE SOLID LINE.

TWO-WAY LEFT TURN LANE AND CENTER LANE LEFT TURN

PAVEMENT MARKER COLOR

MARKER TYPE		BACKSIDE COLOR
ONE WAY TRAFFIC	WHITE INLAID	RED
	TEMPORARY	BLANK
	YELLOW INLAID	BLANK
TWO WAY TRAFFIC	ALL TYPES	MATCH ADJACENT PAVEMENT MARKING

A COPY OF THE ORIGINAL SEALED AND SIGNED DRAWING IS ON FILE IN THE CENTRAL OFFICE.

TYPICAL PAVEMENT MARKER

LOCATION DETAILS

VIRGINIA DEPARTMENT OF TRANSPORTATION

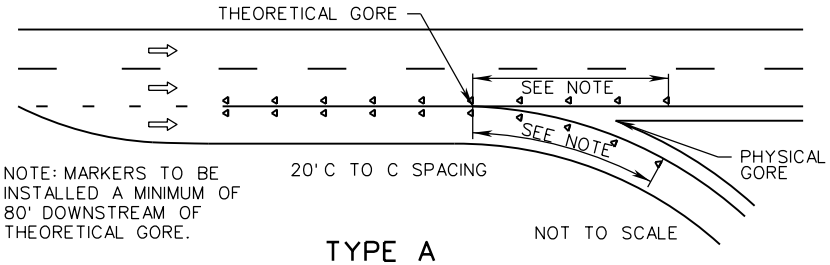

TYPE A

EXIT RAMP

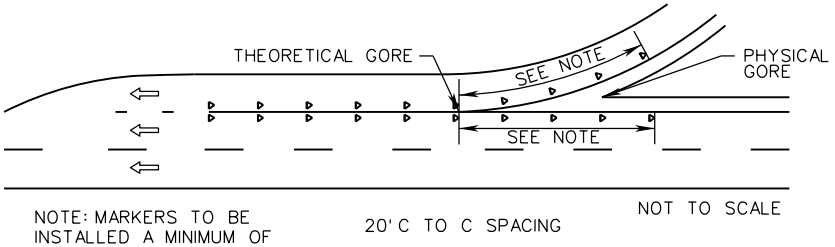

TYPE B

ENTRANCE RAMP

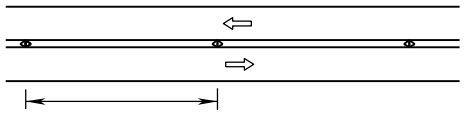

80' C-C ON TANGENTS
40' C-C WHERE ADVISORY CURVE SPEED IS AT LEAST 10 MPH BELOW THE SPEED LIMIT

TYPE C

TWO OR MULTI-LANE UNDIVIDED HIGHWAY

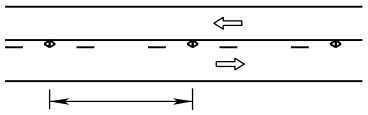

80' C-C ON TANGENTS
40' C-C WHERE ADVISORY CURVE SPEED IS AT LEAST 10 MPH BELOW THE SPEED LIMIT

TYPE D

ONE-WAY OR TWO-WAY PASSING ZONES

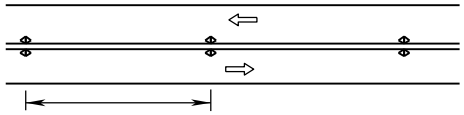

80' C-C ON TANGENTS
40' C-C WHERE ADVISORY CURVE SPEED IS AT LEAST 10 MPH BELOW THE SPEED LIMIT

NOTE: SHALL ONLY BE USED ON EXISTING PAVEMENT WHEN DIRECTED BY CONTRACT DOCUMENTS.

TYPE E

TWO OR MULTI-LANE UNDIVIDED HIGHWAY

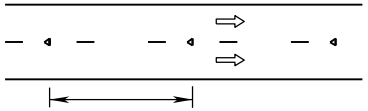

80' C-C ON TANGENTS
40' C-C WHERE ADVISORY CURVE SPEED IS AT LEAST 10 MPH BELOW THE SPEED LIMIT

TYPE F

MULTI-LANE HIGHWAY TANGENT

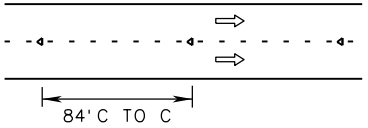

TYPE G

MULTI-LANE HIGHWAY LANE DROP OR AUXILIARY LANE

KEY:

- TWO WAY PAVEMENT MARKER, WITH POINTS INDICATING RETROREFLECTIVE FACE
- ONE WAY PAVEMENT MARKER, WITH POINT INDICATING WHITE RETROREFLECTIVE FACE. BACK SIDE RETROREFLECTIVE FACE SHALL BE RED
- INDICATES DIRECTION OF TRAVEL

SPECIFICATION REFERENCE	A COPY OF THE ORIGINAL SEALED AND SIGNED DRAWING IS ON FILE IN THE CENTRAL OFFICE.	VDOT ROAD AND BRIDGE STANDARDS	
704	TYPICAL PAVEMENT MARKER LOCATION DETAILS VIRGINIA DEPARTMENT OF TRANSPORTATION	REVISION DATE 10/19	SHEET 2 OF 3 1330.81

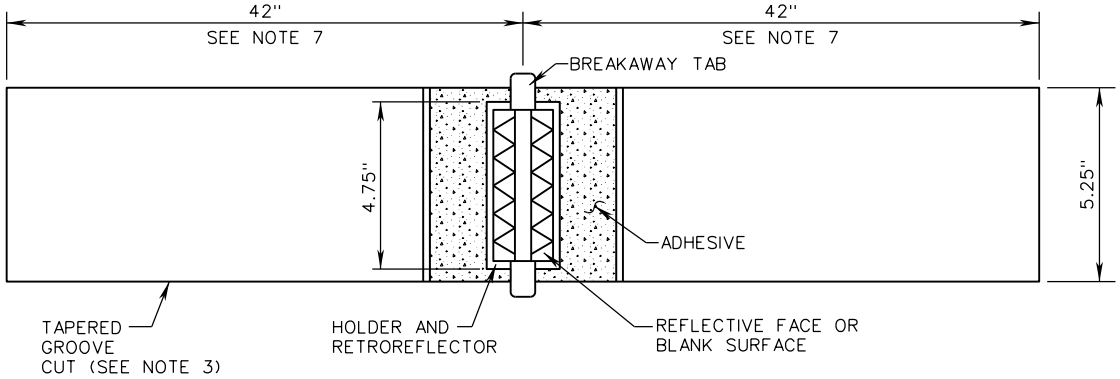

PLAN VIEW - TANGENT SECTIONS

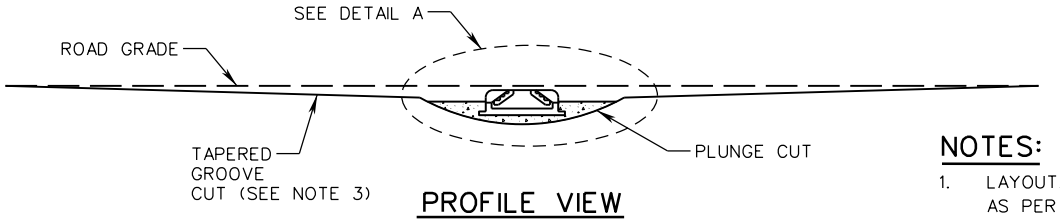

PROFILE VIEW

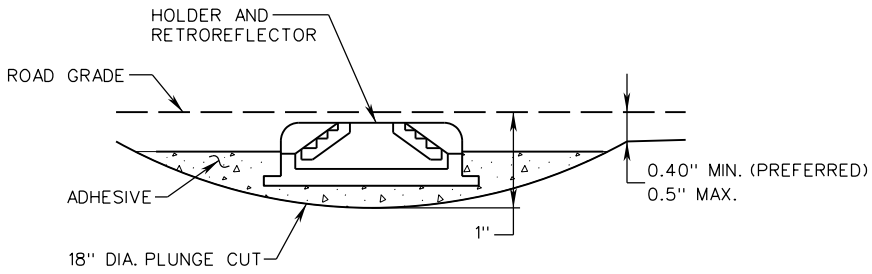

DETAIL A

NOTES:

1. LAYOUT, SPACING, AND COLOR OF INLAID PAVEMENT MARKERS SHALL BE AS PER SHEETS 1 AND 2 OF 3.
2. ALL GROOVE EDGES SHALL BE AT LEAST 2 INCHES FROM ANY SEAM OR PAVEMENT JOINT.
3. GROOVE CUTS MAY BE TAPERED OR BEVELED. TAPERED CUTS SHALL START AT ROAD LEVEL ON EACH END AND TAPER AT A FIXED RATE AS SHOWN ON THE PROFILE VIEW. BEVELED GROOVE CUTS SHALL BE 0.5" MAXIMUM DEPTH (0.4" PREFERRED), AND SHALL BE 0.4" MINIMUM DEPTH AT BOTH ENDS OF THE PLUNGE CUT.
4. GROOVE AND PLUNGE CUT SHALL BE CLEAN AND DRY PRIOR TO PLACEMENT OF ADHESIVE.
5. THE EPOXY ADHESIVE SHALL BE THOROUGHLY MIXED UNTIL IT IS UNIFORM IN COLOR, AND APPLIED IN ACCORDANCE WITH THE MANUFACTURER'S INSTALLATION INSTRUCTIONS.
6. MARKER SHALL BE INSTALLED AS PER MANUFACTURER'S INSTALLATION INSTRUCTIONS WITH THE BREAKAWAY TABS RESTING ON THE PAVEMENT SURFACE. THE EPOXY SHALL BE FILLED TO THE LEVEL OF THE TOP OF THE MARKER HOLDER. EPOXY SHALL NOT TOUCH THE RETROREFLECTOR.
7. TOTAL GROOVE LENGTH MAY BE SHORTENED TO 54" ON SHARP CURVES IF APPROVED BY THE ENGINEER.
8. GROOVES SHALL NOT OVERLAP WITH LOOP DETECTOR WIRES.

A COPY OF THE ORIGINAL SEALED AND SIGNED DRAWING IS ON FILE IN THE CENTRAL OFFICE.

INLAID PAVEMENT MARKER

DETAILS

VIRGINIA DEPARTMENT OF TRANSPORTATION

STANDARD

THIS PAGE INTENTIONALLY LEFT BLANK

SPECIFICATION REFERENCE	TITLE VIRGINIA DEPARTMENT OF TRANSPORTATION	VDOT ROAD AND BRIDGE STANDARDS REVISION DATE	SHEET 1 OF 1 ____._

PARALLEL SOLID LINE SPACING (NO PASSING ZONE)

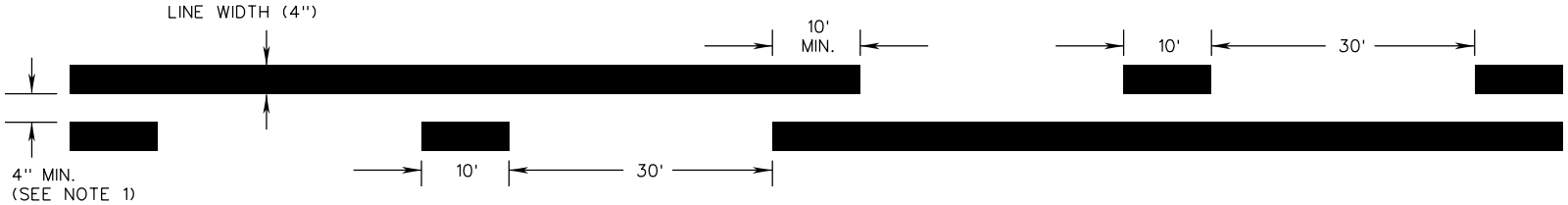

PARALLEL SOLID AND BROKEN LINES
(ONE-WAY PASSING ZONE)

NOTES:

1. THE SPACE BETWEEN TWO PARALLEL LINES SHALL BE 7" WIDE IF RAISED PAVEMENT MARKERS ARE PRESENT BETWEEN THE TWO PARALLEL LINES.

VDOT ROAD AND BRIDGE STANDARDS		A COPY OF THE ORIGINAL SEALED AND SIGNED DRAWING IS ON FILE IN THE CENTRAL OFFICE. PAVEMENT MARKING LOCATION DETAILS VIRGINIA DEPARTMENT OF TRANSPORTATION	SPECIFICATION REFERENCE
SHEET 1 OF 1	REVISION DATE		704
1330.90	10/19		

PM-10

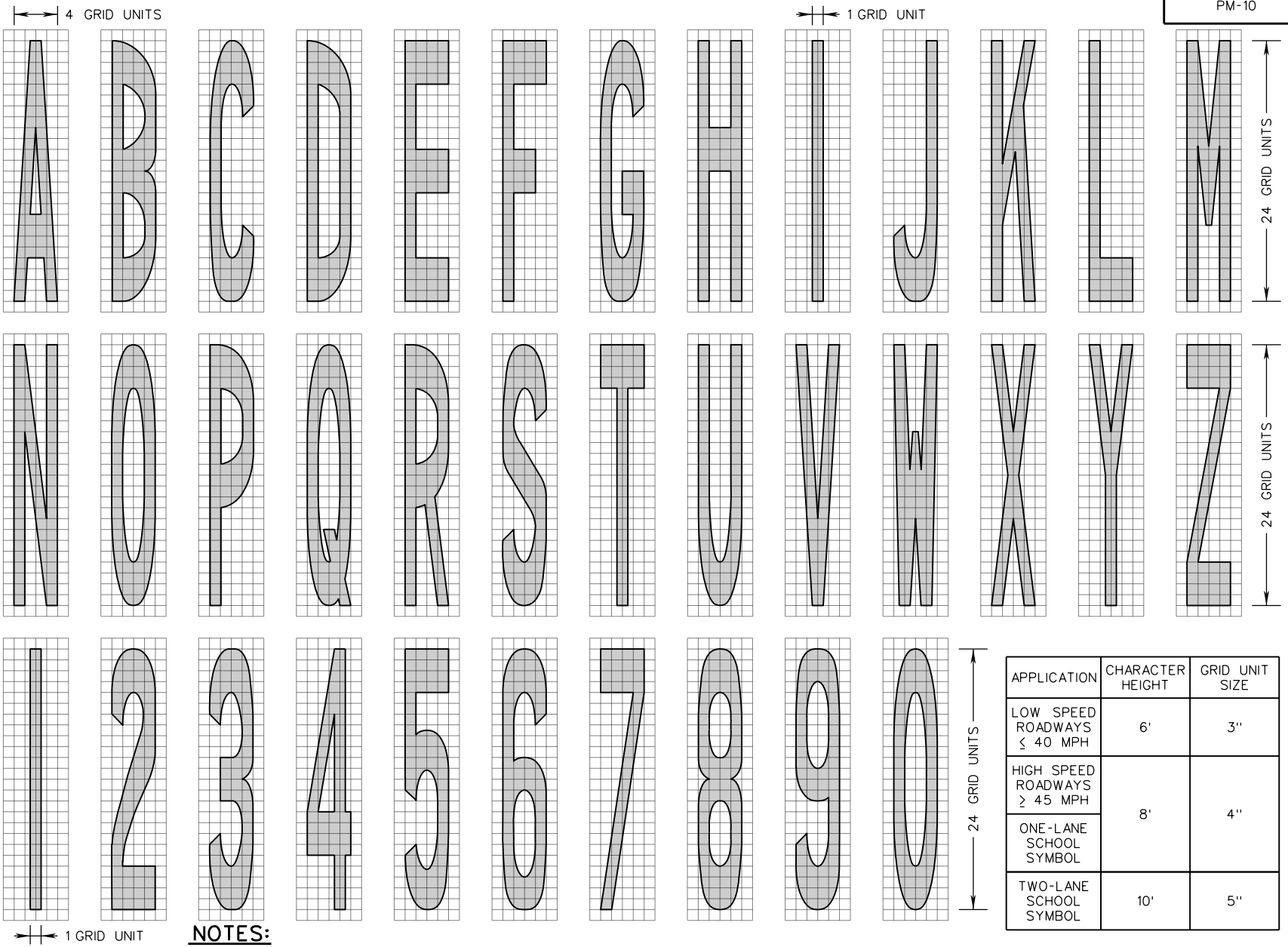

APPLICATION	CHARACTER HEIGHT	GRID UNIT SIZE
LOW SPEED ROADWAYS ≤ 40 MPH	6'	3"
HIGH SPEED ROADWAYS ≥ 45 MPH	8'	4"
ONE-LANE SCHOOL SYMBOL		
TWO-LANE SCHOOL SYMBOL	10'	5"

NOTES:

1. STANDARD CHARACTERS ARE 24 GRID UNITS HIGH AND 4 GRID UNITS WIDE (EXCEPT LETTER "I" AND THE NUMBER "1" WHICH ARE 1 GRID UNIT WIDE).
2. VERTICAL STROKES ARE 1 UNIT WIDE, HORIZONTAL STROKES ARE 4 UNITS HIGH.
3. SPACE 1 GRID UNIT MINIMUM BETWEEN CHARACTERS OR AS OTHERWISE SHOWN (OPTICAL SPACING MAY BE USED).

SPECIFICATION REFERENCE

704

A COPY OF THE ORIGINAL SEALED AND SIGNED DRAWING IS ON FILE IN THE CENTRAL OFFICE.

PAVEMENT WORD, SYMBOL, AND ARROW MARKINGS

LETTERS AND NUMERALS DETAILS

VIRGINIA DEPARTMENT OF TRANSPORTATION

VDOT

ROAD AND BRIDGE STANDARDS

REVISION DATE NEW 01/15

SHEET 1 OF 15

1340.10

PM-10

SQUARE FOOT AREAS OF PAVEMENT WORD MARKINGS

LEGEND	PAINT APPLICATION 6' HIGH	PAINT APPLICATION 8' HIGH	ERADICATION 6' HIGH	ERADICATION 8' HIGH
AHEAD	17.5	30.5	42.0	75.0
AREA	14.0	24.5	33.0	59.0
BIKE	13.0	23.0	28.5	51.0
BUMP	15.0	26.5	33.0	59.0
EAST	13.0	22.5	33.0	59.0
ENDS	15.0	27.0	33.0	59.0
FT	5.0	9.0	15.0	27.0
HUMP	14.5	25.5	33.0	59.0
LANE	13.5	23.5	33.0	59.0
LEFT	11.0	20.0	33.0	59.0
MERGE	19.0	34.0	42.0	75.0
MPH	11.0	19.5	24.0	43.0
NO	8.0	13.5	15.0	27.0
NORTH	17.5	30.5	42.0	75.0

SQUARE FOOT AREAS OF PAVEMENT WORD MARKINGS

LEGEND	PAINT APPLICATION 6' HIGH	PAINT APPLICATION 8' HIGH	ERADICATION 6' HIGH	ERADICATION 8' HIGH
ONLY	12.0	21.5	30.5	53.5
PED	11.0	19.0	24.0	43.0
RIGHT	14.5	26.0	37.5	67.0
SCHOOL	(SEE NOTES 1 AND 2)	34.5 (ONE LANE)	(SEE NOTES 1 AND 2)	91.0 (ONE LANE)
SIGNAL	15.5	28.0	46.5	83.0
SLOW	13.5	24.0	33.0	59.0
SOUTH	16.5	29.0	42.0	75.0
STOP	12.5	22.5	33.0	59.0
TO	6.0	10.5	15.0	27.0
TURN	13.5	24.0	33.0	59.0
US	7.0	12.5	15.0	27.0
WEST	14.0	24.5	33.0	59.0
XING	12.0	21.0	28.5	51.0
YIELD	13.5	24.0	37.5	67.0

NOTES:

1. ONE-LANE APPLICATION OF "SCHOOL" SYMBOL IS 8' HIGH. WHEN INSTALLED IN A SINGLE LANE WITH A WIDTH LESS THAN 10.5', THE LETTERS SHALL BE SEPARATED BY THREE INCHES. WHEN INSTALLED IN A SINGLE LANE WITH A WIDTH GREATER THAN 10.5', THE LETTERS SHALL BE SEPARATED BY FOUR INCHES.
2. TWO-LANE APPLICATION OF "SCHOOL" SYMBOL IS 10' HIGH WITH PAINT APPLICATION AREA OF 53.5 SQ.FT. AND ERADICATION AREA OF 193.0 SQ.FT.
3. NON-LINEAR ERADICATION AREA IS BASED ON A "THEORETICAL BOX" DEFINED BY THE OUTERMOST LIMITS OF THE NON-LINEAR PAVEMENT MARKING THAT INCLUDES BOTH THE PAINTED AND NON-PAINTED AREAS THAT ENCOMPASS THE TOTAL WORD MESSAGE OR SYMBOL. SEE EXAMPLE.
4. ON UNDIVIDED ROADWAYS, SYMBOL AND MESSAGE PAVEMENT MARKINGS SHALL NOT EXTEND BEYOND THE CENTERLINE INTO OPPOSING TRAVEL LANES.

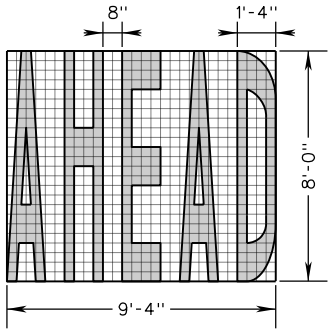

ERADICATION AREA = 8'-0" x 9'-4" ≈ 74.7 SQ.FT.

THEORETICAL BOX ERADICATION AREA EXAMPLE (8' LETTERS)

VDOT
ROAD AND BRIDGE STANDARDS

SHEET 2 OF 15
1340.11

REVISION DATE
NEW 01/15

A COPY OF THE ORIGINAL SEALED AND SIGNED DRAWING IS ON FILE IN THE CENTRAL OFFICE.

PAVEMENT WORD, SYMBOL, AND ARROW MARKINGS

WORDS DETAILS

VIRGINIA DEPARTMENT OF TRANSPORTATION

SPECIFICATION REFERENCE
704

SQUARE FOOT AREAS OF SYMBOLS AND ARROWS

SYMBOL	DESCRIPTION	PAINT APPLICATION	ERADICATION
	THRU ARROW	12.0	32.0
OR	SINGLE TURN ARROW (LEFT OR RIGHT)	17.5	51.0
OR	DOUBLE TURN ARROW (LEFT/THROUGH OR RIGHT/THROUGH)	28.5	96.0
	TRIPLE TURN ARROW (LEFT/THROUGH/RIGHT)	37.5	127.5
	DOUBLE TURN ARROW ARROW (LEFT/RIGHT)	27.0	80.0
OR	LANE-REDUCTION ARROW (LEFT OR RIGHT)	44.0	99.0
	WRONG-WAY ARROW	24.0	133.5
	FISH-HOOK LANE-USE ARROW FOR ROUNDABOUTS (LEFT)	20.5	81.0
	FISH-HOOK LANE-USE ARROW FOR ROUNDABOUTS (LEFT/THROUGH)	31.0	114.5
	FISH-HOOK LANE-USE ARROW FOR ROUNDABOUTS (LEFT/THROUGH/RIGHT)	39.5	195.0
	FISH-HOOK LANE-USE ARROW FOR ROUNDABOUTS (THROUGH/RIGHT)	31.5	142.0
	OPTIONAL OVAL FOR FISH-HOOK LANE-USE ARROW FOR ROUNDABOUTS	3.5	4.5
	HOV DIAMOND SYMBOL (ASPHALT SURFACE)	11.5	39.0
	HOV DIAMOND CONTRAST SYMBOL (CONCRETE SURFACE)	35.5	70.0
	YIELD LINE TRIANGLE (1' x 1.5')	0.75 (EACH)	1.5 (EACH)
	YIELD LINE TRIANGLE (2' x 3')	3.0 (EACH)	6.0 (EACH)

SQUARE FOOT AREAS OF SYMBOLS AND ARROWS

SYMBOL	DESCRIPTION	PAINT APPLICATION	ERADICATION
	BICYCLIST THRU ARROW	5.0	12.0
OR	BICYCLIST TURN ARROW (LEFT OR RIGHT)	9.5	29.0
	HELMETED BICYCLIST SYMBOL	6.5	20.0
	SHARED LANE MARKING SYMBOL	10.0	31.5
	SMALL YIELD AHEAD TRIANGLE	26.0	78.0
	LARGE YIELD AHEAD TRIANGLE	37.0	120.0
	RAILROAD CROSSING SYMBOL	60.0	160.0
	INTERNATIONAL SYMBOL OF ACCESSIBILITY - SPECIAL SIZED	22.0	22.5

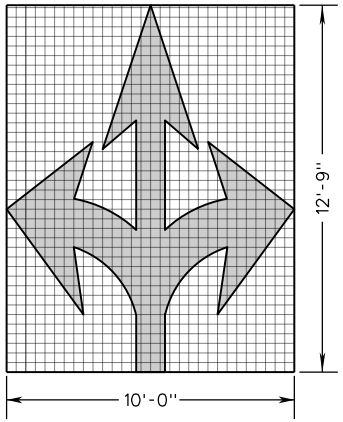

ERADICATION AREA = 12'-9" x 10'-0" ≈ 127.5 SQ.FT.

THEORETICAL BOX
ERADICATION AREA EXAMPLE (TRIPLE TURN ARROW)

SPECIFICATION REFERENCE	A COPY OF THE ORIGINAL SEALED AND SIGNED DRAWING IS ON FILE IN THE CENTRAL OFFICE.	VDOT ROAD AND BRIDGE STANDARDS
704	PAVEMENT WORD, SYMBOL, AND ARROW MARKINGS SQUARE FOOT AREAS OF SYMBOLS AND ARROWS VIRGINIA DEPARTMENT OF TRANSPORTATION	REVISION DATE 02/16 SHEET 3 OF 15 1340.12

PM-10

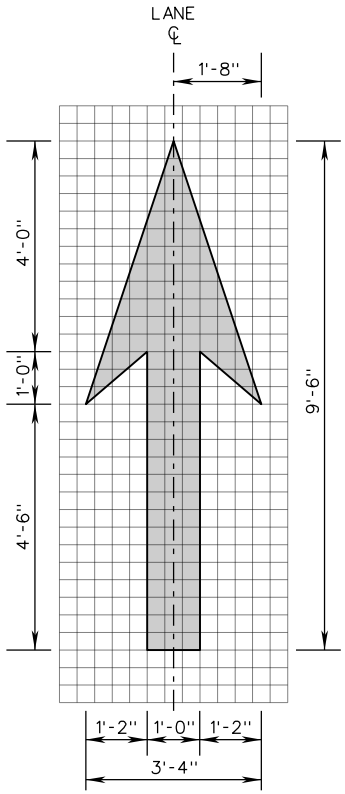

THRU ARROW

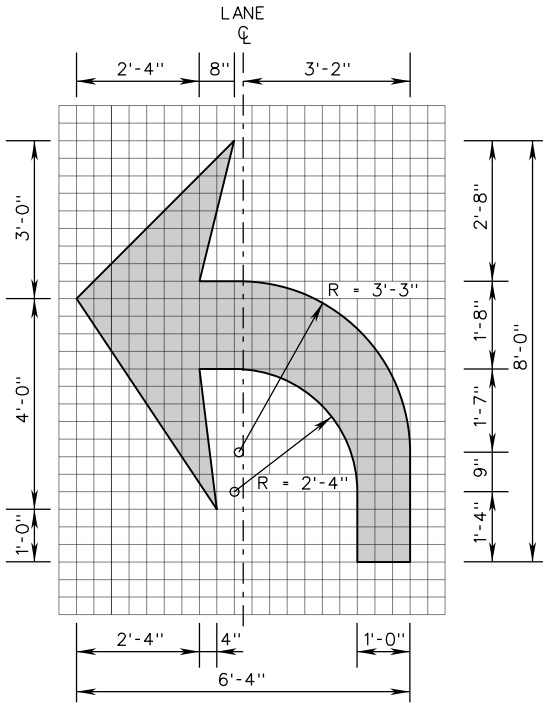

SINGLE TURN ARROW
(LEFT OR RIGHT)

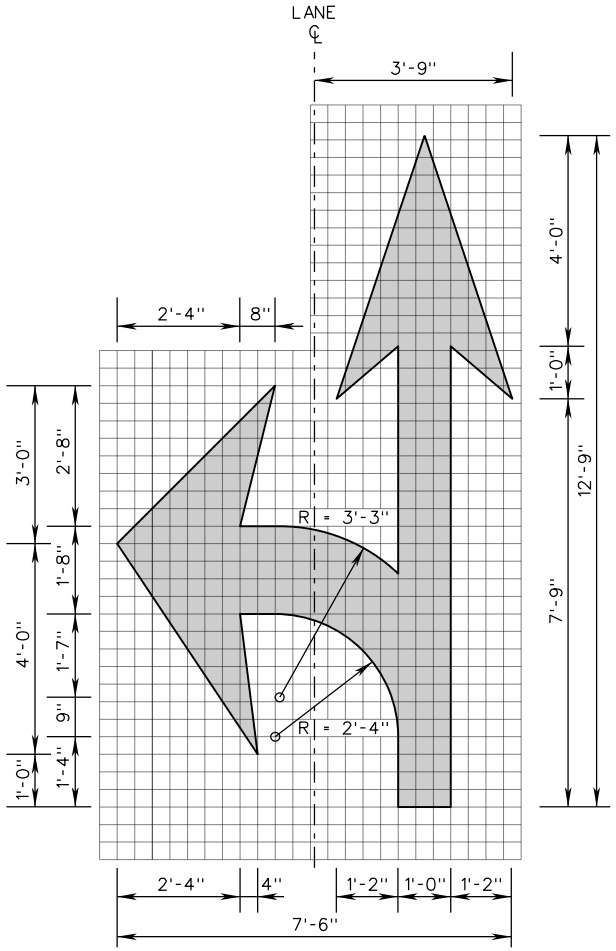

DOUBLE TURN ARROW
(LEFT/THRU OR
RIGHT/THRU)

NOTES:

1. 1 GRID UNIT = 4 INCHES
2. ALL SYMBOLS/LEGEND SHALL BE WHITE UNLESS OTHERWISE SPECIFIED IN THE CONTRACT DOCUMENTS.

VDOT ROAD AND BRIDGE STANDARDS	A COPY OF THE ORIGINAL SEALED AND SIGNED DRAWING IS ON FILE IN THE CENTRAL OFFICE.		SPECIFICATION REFERENCE
SHEET 4 OF 15	PAVEMENT WORD, SYMBOL, AND ARROW MARKINGS	REVISION DATE	
1340.13	ARROW DETAILS	NEW 01/15	704
	VIRGINIA DEPARTMENT OF TRANSPORTATION		

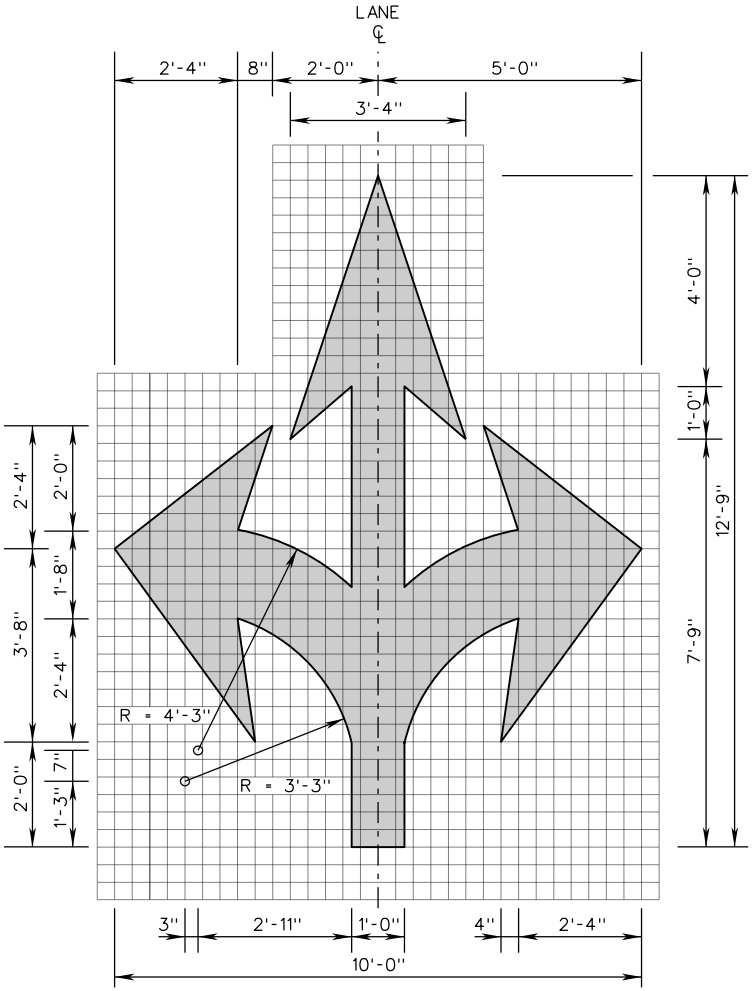

TURN TURN ARROW
(LEFT/THRU/RIGHT)

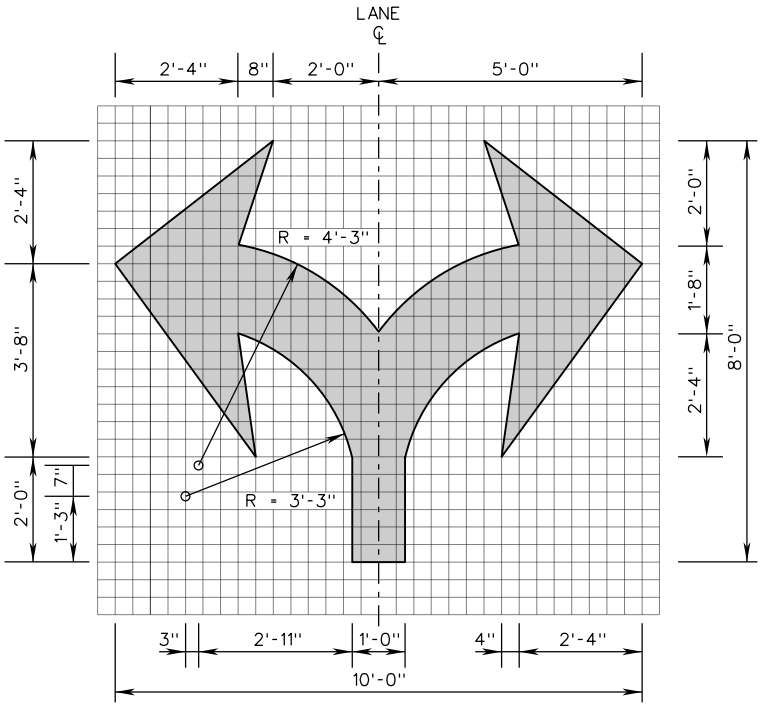

DOUBLE TURN ARROW
(LEFT/RIGHT)

NOTES:

1. 1 GRID UNIT = 4 INCHES
2. ALL SYMBOLS/LEGEND SHALL BE WHITE UNLESS OTHERWISE SPECIFIED IN THE CONTRACT DOCUMENTS.

SPECIFICATION REFERENCE	A COPY OF THE ORIGINAL SEALED AND SIGNED DRAWING IS ON FILE IN THE CENTRAL OFFICE.	VDOT ROAD AND BRIDGE STANDARDS
704	PAVEMENT WORD, SYMBOL, AND ARROW MARKINGS ARROW DETAILS VIRGINIA DEPARTMENT OF TRANSPORTATION	REVISION DATE NEW 01/15 SHEET 5 OF 15 1340.14

PM-10

NOTES:

1. 1 GRID UNIT = 6 INCHES
2. ALL SYMBOLS/LEGEND SHALL BE WHITE UNLESS OTHERWISE SPECIFIED IN THE CONTRACT DOCUMENTS.

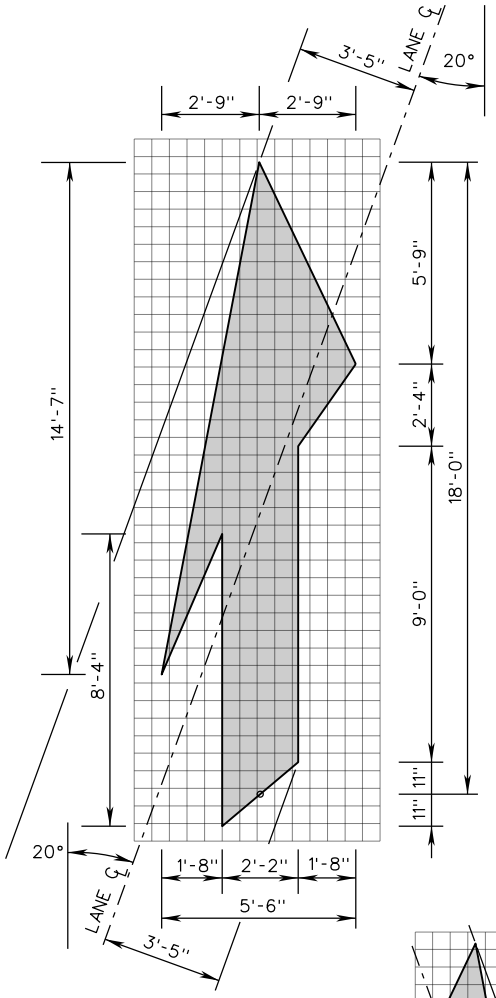

LANE REDUCTION ARROW (LEFT)

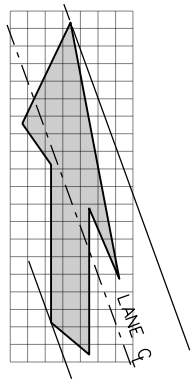

LANE REDUCTION ARROW (RIGHT)

SHOWN FOR CLARITY
1 GRID UNIT = 1 FOOT

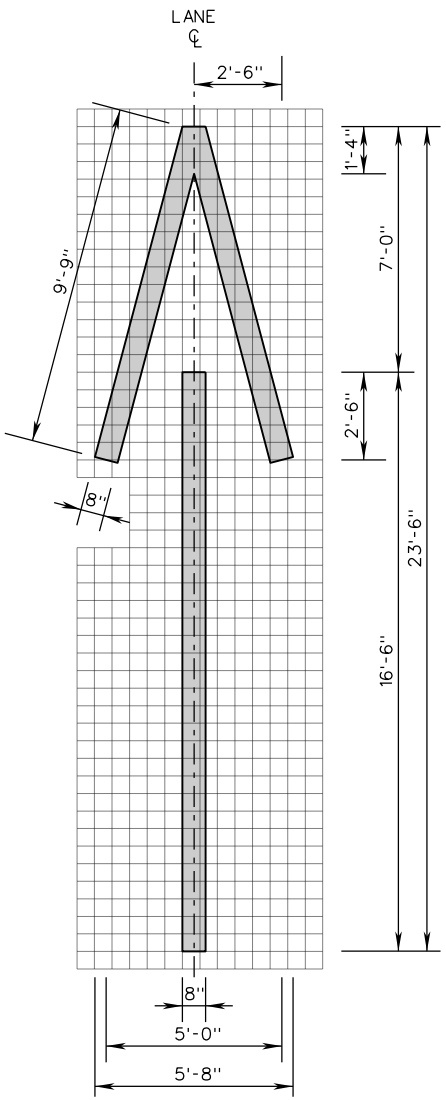

WRONG-WAY ARROW

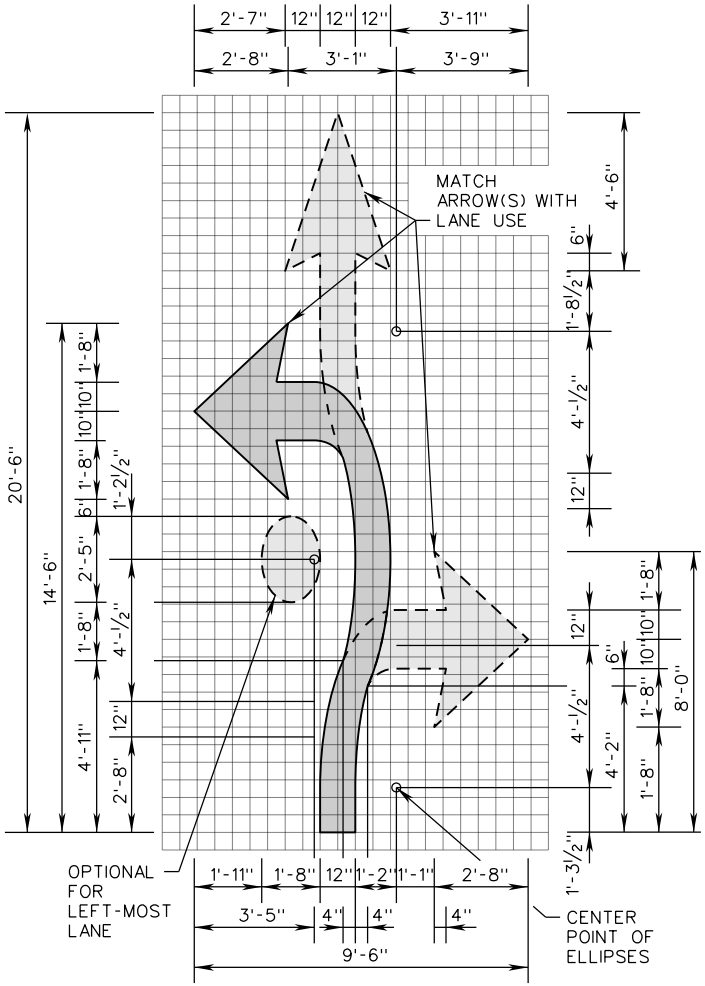

FISH-HOOK LANE-USE ARROW FOR ROUNDABOUTS

VDOT ROAD AND BRIDGE STANDARDS	A COPY OF THE ORIGINAL SEALED AND SIGNED DRAWING IS ON FILE IN THE CENTRAL OFFICE.	SPECIFICATION REFERENCE
SHEET 6 OF 15	PAVEMENT WORD, SYMBOL, AND ARROW MARKINGS	
1340.15	ARROW DETAILS	704
REVISION DATE 01/15	VIRGINIA DEPARTMENT OF TRANSPORTATION	

PM-10

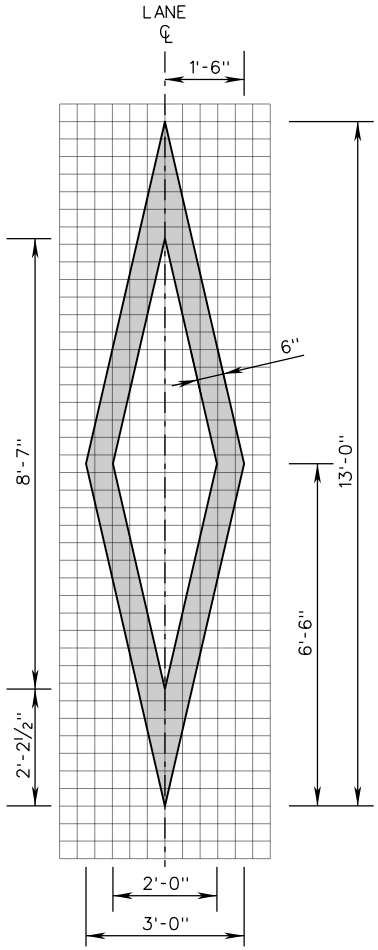

HOV DIAMOND SYMBOL
(ASPHALT SURFACE)

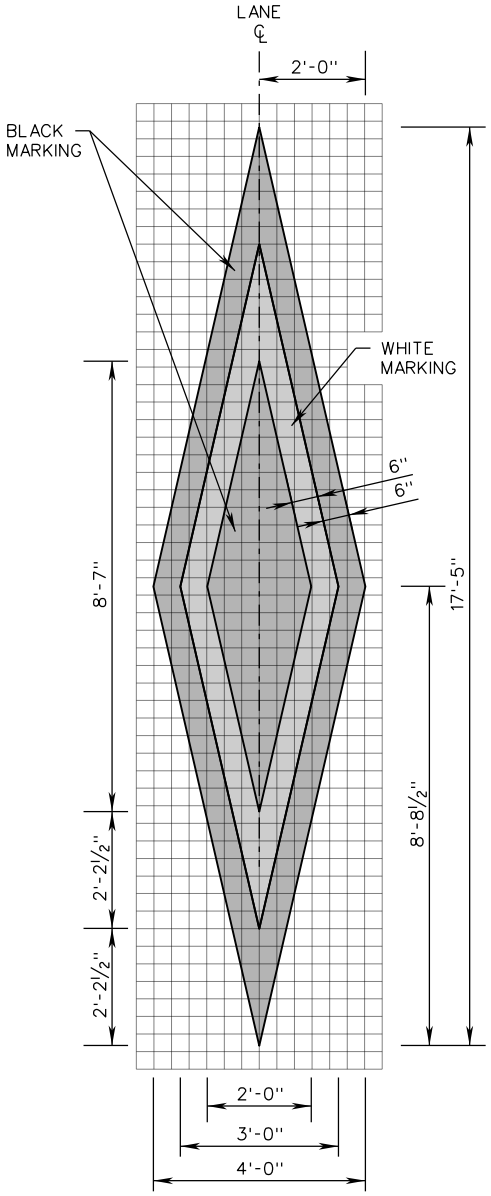

HOV DIAMOND
CONTRAST SYMBOL
(CONCRETE SURFACE)

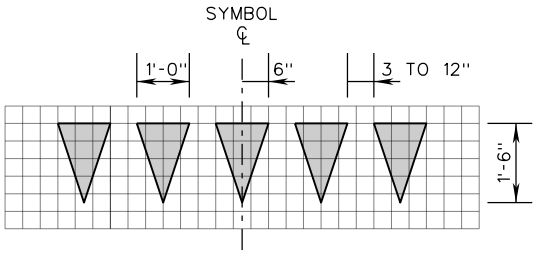

YIELD LINE TRIANGLE
(1' x 1.5' TRIANGLES)

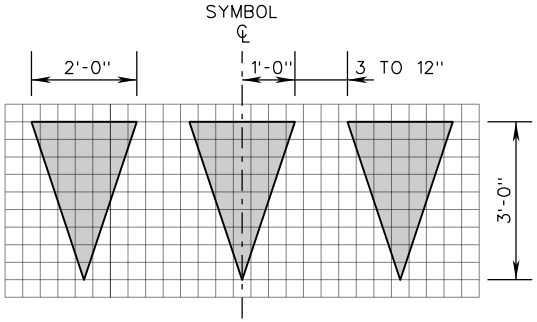

YIELD LINE TRIANGLE
(2' x 3' TRIANGLES)

NOTES:

1. 1 GRID UNIT = 4 INCHES
2. ALL SYMBOLS/LEGEND SHALL BE WHITE UNLESS OTHERWISE SPECIFIED IN THE CONTRACT DOCUMENTS.

SPECIFICATION REFERENCE	A COPY OF THE ORIGINAL SEALED AND SIGNED DRAWING IS ON FILE IN THE CENTRAL OFFICE.	VDOT ROAD AND BRIDGE STANDARDS
704	PAVEMENT WORD, SYMBOL, AND ARROW MARKINGS SYMBOL DETAILS VIRGINIA DEPARTMENT OF TRANSPORTATION	REVISION DATE 02/16 — SHEET 7 OF 15 — 1340.16

PM-10

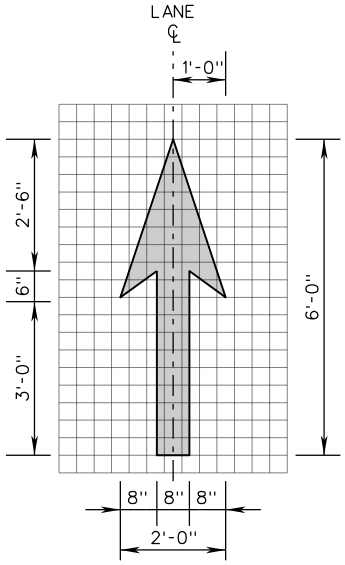

BICYCLIST THRU ARROW

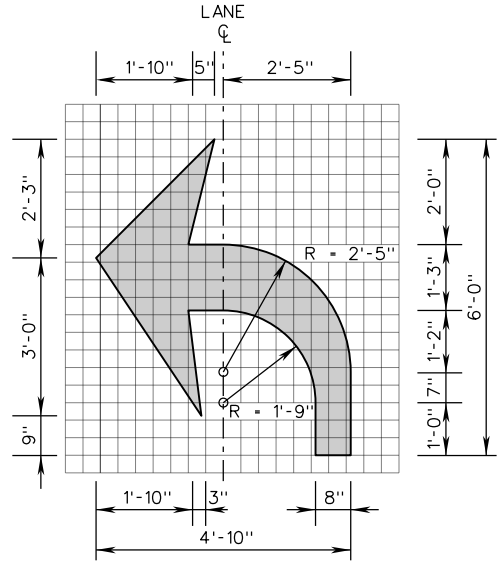

BICYCLIST THRU ARROW (LEFT OR RIGHT)

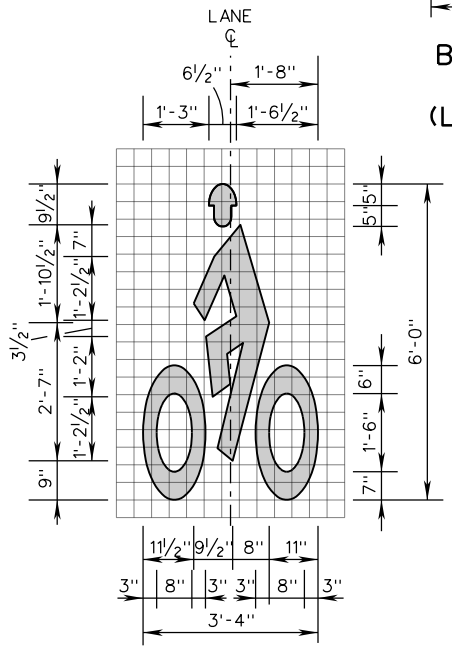

HELMETED BICYCLIST SYMBOL

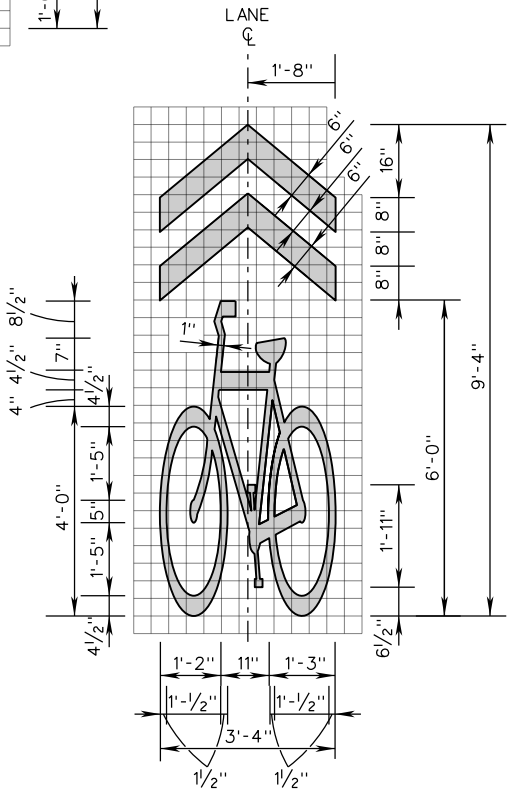

SHARED LANE MARKING SYMBOL

NOTES:

1. 1 GRID UNIT = 4 INCHES
2. ALL SYMBOLS/LEGEND SHALL BE WHITE UNLESS OTHERWISE SPECIFIED IN THE CONTRACT DOCUMENTS.

VDOT
ROAD AND BRIDGE STANDARDS

SHEET 8 OF 15
1340.17

REVISION DATE
NEW 01/15

A COPY OF THE ORIGINAL SEALED AND SIGNED DRAWING IS ON FILE IN THE CENTRAL OFFICE.

PAVEMENT WORD, SYMBOL, AND ARROW MARKINGS

SYMBOL DETAILS

VIRGINIA DEPARTMENT OF TRANSPORTATION

SPECIFICATION REFERENCE
704

NOTES:

1. 1 GRID UNIT = 6 INCHES
2. ALL SYMBOLS/LEGEND SHALL BE WHITE UNLESS OTHERWISE SPECIFIED IN THE CONTRACT DOCUMENTS.

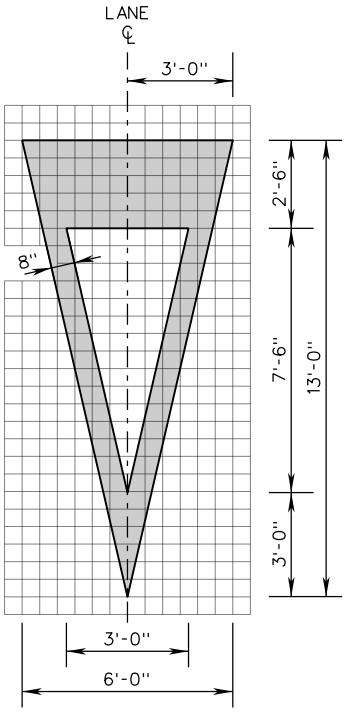

YIELD AHEAD
TRIANGLE - SMALL

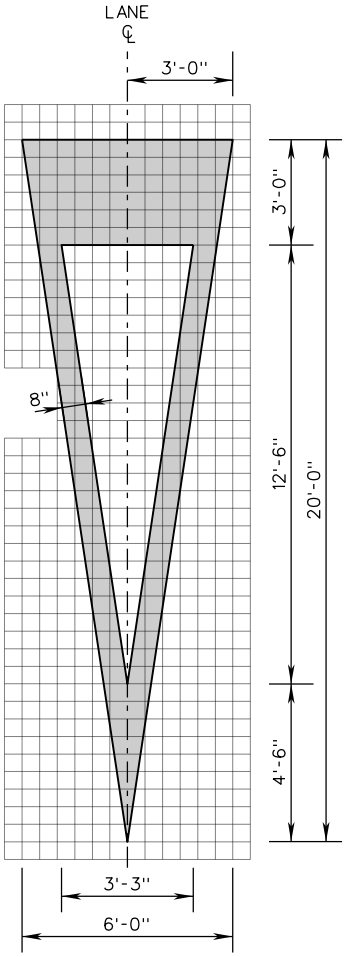

YIELD AHEAD
TRIANGLE - LARGE

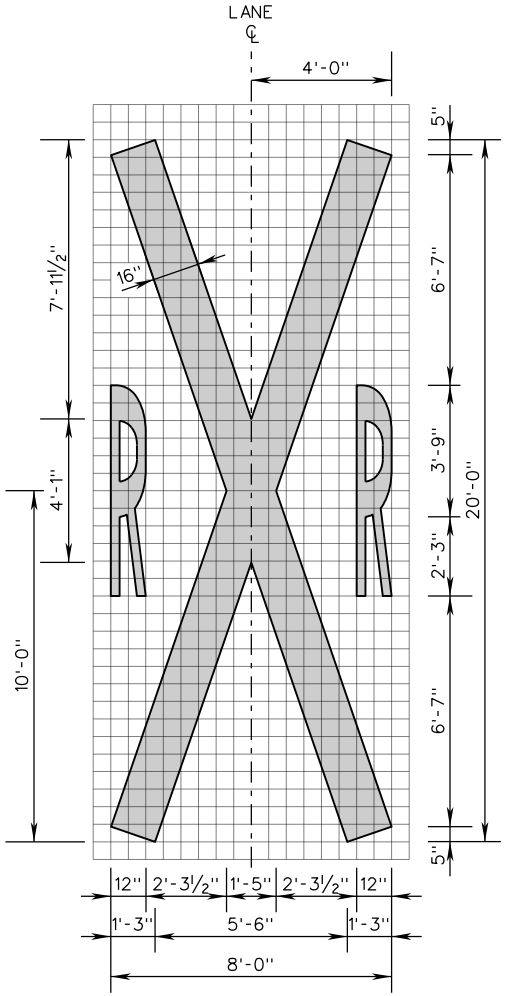

RAILROAD CROSSING
SYMBOL

SPECIFICATION REFERENCE	A COPY OF THE ORIGINAL SEALED AND SIGNED DRAWING IS ON FILE IN THE CENTRAL OFFICE.	VDOT ROAD AND BRIDGE STANDARDS
704	PAVEMENT WORD, SYMBOL, AND ARROW MARKINGS SYMBOL DETAILS VIRGINIA DEPARTMENT OF TRANSPORTATION	REVISION DATE NEW 01/15 SHEET 9 OF 15 1340.18

PM-10

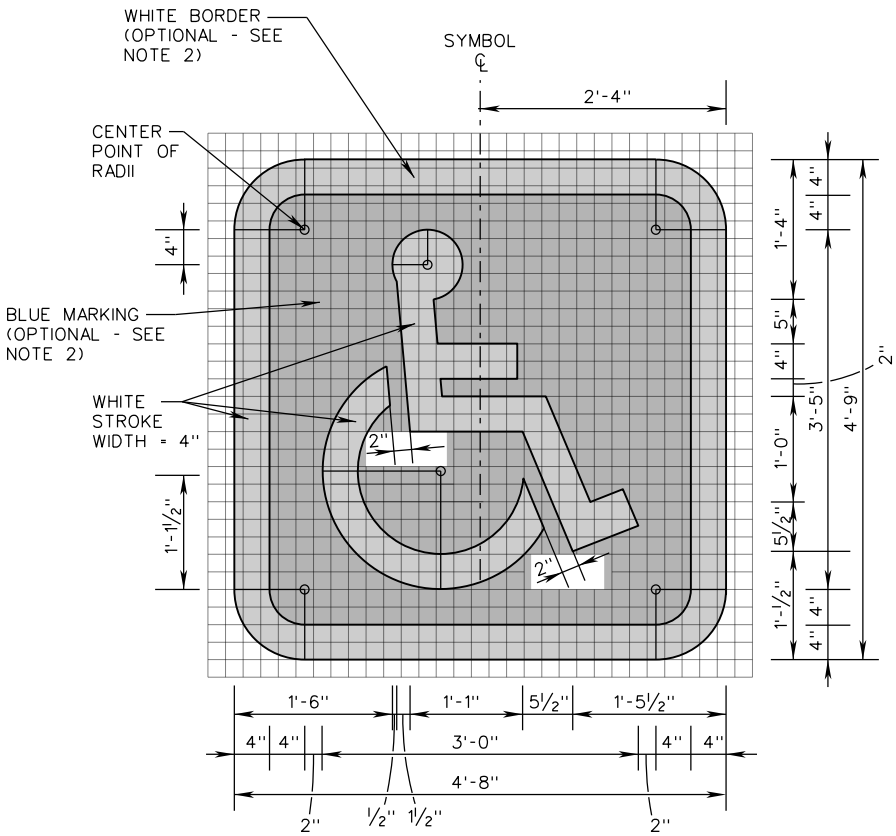

INTERNATIONAL SYMBOL OF ACCESSIBILITY - SPECIAL SIZED

NOTES:

1. 1 GRID UNIT = 2 INCHES
2. BLUE MARKING AND WHITE BORDER SHALL BE OMITTED EXCEPT WHERE SPECIFIED IN CONTRACT DOCUMENTS.

VDOT ROAD AND BRIDGE STANDARDS	A COPY OF THE ORIGINAL SEALED AND SIGNED DRAWING IS ON FILE IN THE CENTRAL OFFICE.		SPECIFICATION REFERENCE
SHEET 10 OF 15	PAVEMENT WORD, SYMBOL, AND ARROW MARKINGS		704
1340.19	SYMBOL DETAILS	REVISION DATE 04/19	
	VIRGINIA DEPARTMENT OF TRANSPORTATION		

SQUARE FOOT AREAS OF ROUTE SHIELD SYMBOLS

	DESCRIPTION	PAINT APPLICATION			ERADICATION		
	SYMBOL HEIGHT	15.0 FT	17.5 FT	20.0 FT	15.0 FT	17.5 FT	20.0 FT
95	2 DIGITS INTERSTATE SHIELD (ON LIGHT OR DARK PAVEMENT)	72.0	98.0	128.0	90.0	122.5	160.0
264	3 DIGITS INTERSTATE SHIELD (ON LIGHT OR DARK PAVEMENT)	90.0	122.5	160.0	112.5	153.5	200.0
50 50	1 OR 2 DIGITS U.S. ROUTE SHIELD						
	ON LIGHT PAVEMENT	27.5	37.5	49.0	90.0	122.5	160.0
	ON DARK PAVEMENT	90.0	122.5	160.0			
460 460	3 DIGITS U.S. ROUTE SHIELD						
	ON LIGHT PAVEMENT	37.5	50.5	66.0	112.5	153.5	200.0
	ON DARK PAVEMENT	112.5	153.5	200.0			
28 28	2 DIGITS VA PRIMARY RTE SHIELD						
	ON LIGHT PAVEMENT	27.5	37.0	48.5	90.0	122.5	160.0
	ON DARK PAVEMENT	90.0	122.5	160.0			
234 234	3 DIGITS VA PRIMARY RTE SHIELD						
	ON LIGHT PAVEMENT	37.0	50.5	65.5	112.5	153.5	200.0
	ON DARK PAVEMENT	112.5	153.5	200.0			
626 626	3 DIGITS VA SECONDARY RTE SHIELD						
	ON LIGHT PAVEMENT	30.0	41.0	53.5	90.0	122.5	160.0
	ON DARK PAVEMENT	90.0	122.5	160.0			
8900 8900	4 DIGITS VA SECONDARY RTE SHIELD						
	ON LIGHT PAVEMENT	31.0	42.0	55.0	112.5	153.5	200.0
	ON DARK PAVEMENT	112.5	153.5	200.0			

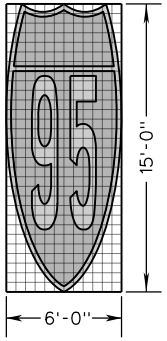

ERADICATION AREA = 15'-0" x 6'-0" ≈ 90.0 SQ.FT.

THEORETICAL BOX
ERADICATION AREA EXAMPLE
(15' SYMBOL HEIGHT)

SPECIFICATION REFERENCE	A COPY OF THE ORIGINAL SEALED AND SIGNED DRAWING IS ON FILE IN THE CENTRAL OFFICE.	VDOT ROAD AND BRIDGE STANDARDS	
704	PAVEMENT WORD, SYMBOL, AND ARROW MARKINGS SQUARE FOOT AREAS OF ROUTE SHIELD SYMBOLS VIRGINIA DEPARTMENT OF TRANSPORTATION	REVISION DATE NEW 01/15	SHEET 11 OF 15 1340.20

PM-10

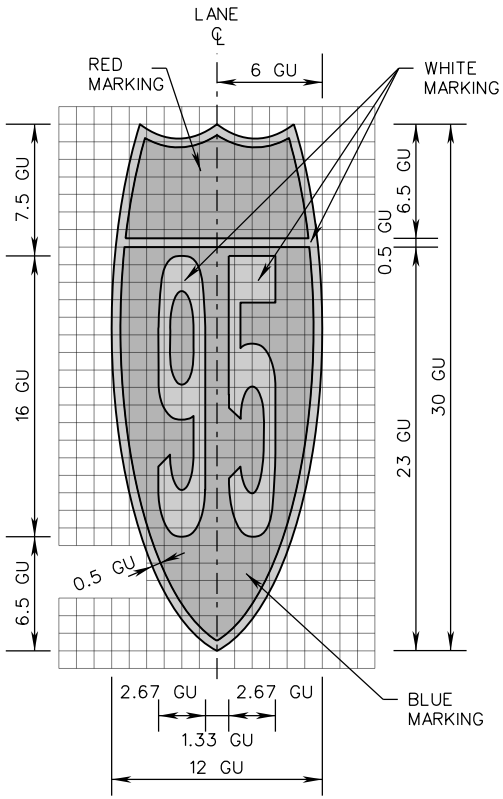

2 DIGITS INTERSTATE SHIELD ON DARK OR LIGHT PAVEMENT

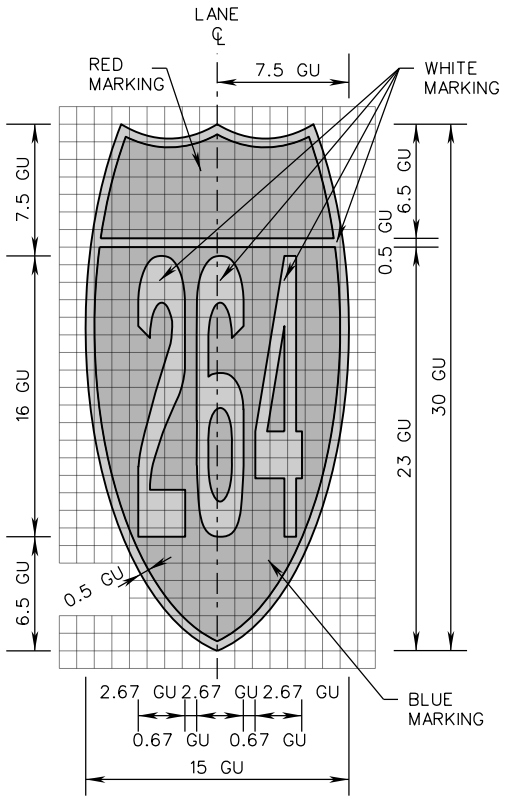

3 DIGITS INTERSTATE SHIELD ON DARK OR LIGHT PAVEMENT

NOTES:

1. SEE TABLE FOR GRID UNIT (GU) SIZE AND SHIELD AND NUMERIAL DIMENSIONS.
2. FOR THE NUMBER "1", DIVIDE NUMERAL WIDTH BY 4.

GRID UNIT (GU) SIZE	SHIELD HEIGHT	SHIELD WIDTH		NUMERAL DIMENSIONS	
		2 DIGITS	3 DIGITS	HEIGHT	WIDTH (SEE NOTE 2)
6"	15'-0"	6'-0"	7'-6"	8'-0"	1'-4"
7"	17'-6"	7'-0"	8'-9"	9'-4"	1'-6⅔"
8"	20'-0"	8'-0"	10'-0"	10'-8"	1'-9⅓"

VDOT
ROAD AND BRIDGE STANDARDS

SHEET 12 OF 15
1340.21

REVISION DATE
NEW 01/15

A COPY OF THE ORIGINAL SEALED AND SIGNED DRAWING IS ON FILE IN THE CENTRAL OFFICE.

PAVEMENT WORD, SYMBOL, AND ARROW MARKINGS

ROUTE SHIELD DETAILS

VIRGINIA DEPARTMENT OF TRANSPORTATION

SPECIFICATION REFERENCE
704

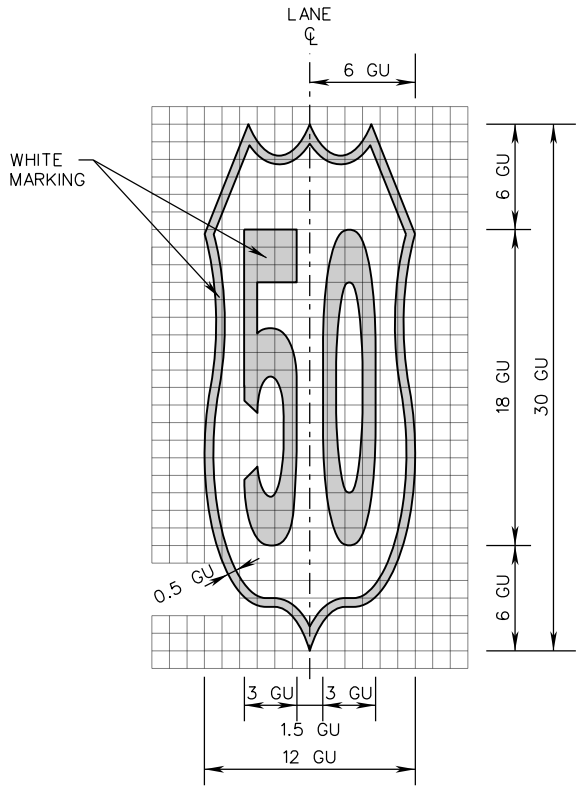

1 OR 2 DIGITS U.S. ROUTE SHIELD ON DARK PAVEMENT

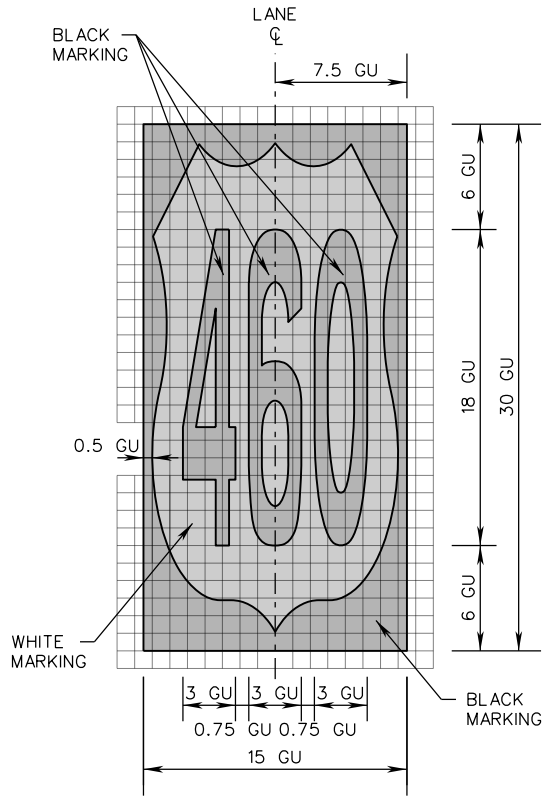

3 DIGITS U.S. ROUTE SHIELD ON LIGHT PAVEMENT

NOTES:

1. SEE TABLE FOR GRID UNIT (GU) SIZE AND SHIELD AND NUMERIAL DIMENSIONS.
2. FOR THE NUMBER "1", DIVIDE NUMERAL WIDTH BY 4.

GRID UNIT (GU) SIZE	SHIELD HEIGHT	SHIELD WIDTH		NUMERAL DIMENSIONS	
		2 DIGITS	3 DIGITS	HEIGHT	WIDTH (SEE NOTE 2)
6"	15'-0"	6'-0"	7'-6"	9'-0"	1'-6"
7"	17'-6"	7'-0"	8'-9"	10'-6"	1'-9"
8"	20'-0"	8'-0"	10'-0"	12'-0"	2'-0"

SPECIFICATION REFERENCE

704

A COPY OF THE ORIGINAL SEALED AND SIGNED DRAWING IS ON FILE IN THE CENTRAL OFFICE.

PAVEMENT WORD, SYMBOL, AND ARROW MARKINGS

ROUTE SHIELD DETAILS

VIRGINIA DEPARTMENT OF TRANSPORTATION

VDOT

ROAD AND BRIDGE STANDARDS

REVISION DATE NEW 01/15

SHEET 13 OF 15

1340.22

PM-10

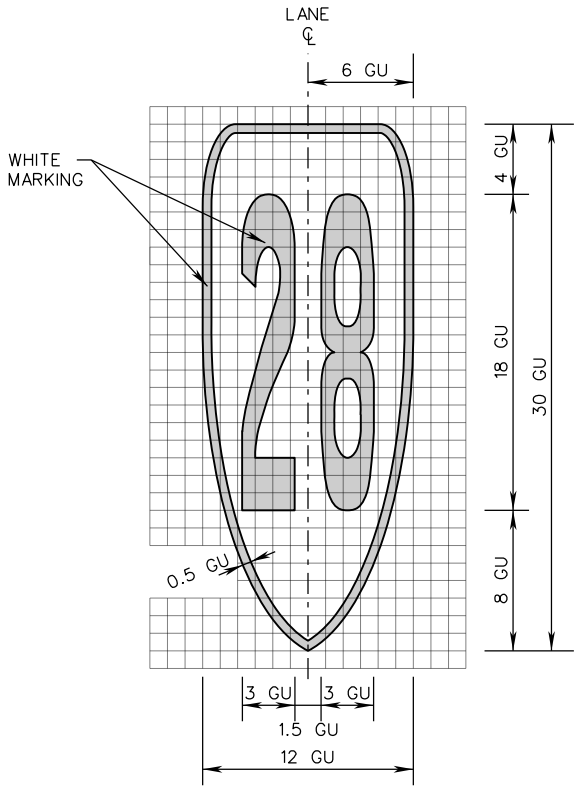

2 DIGITS VIRGINIA
PRIMARY ROUTE SHIELD
ON DARK PAVEMENT

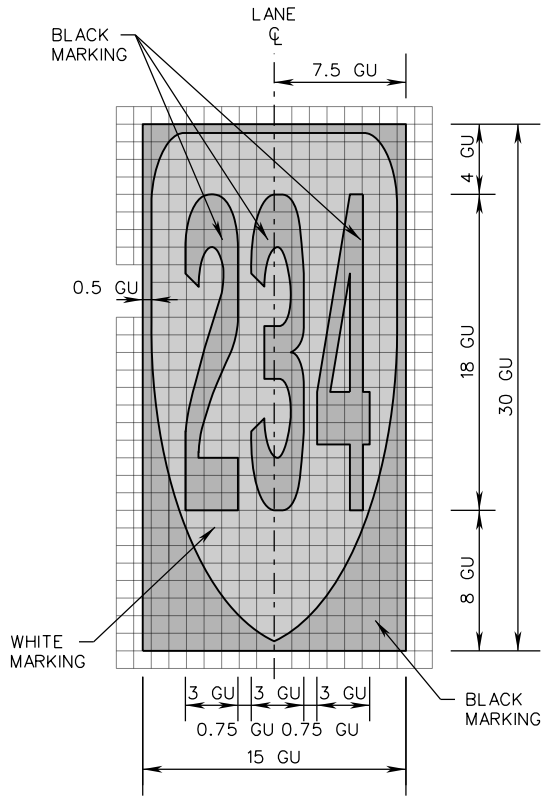

3 DIGITS VIRGINIA
PRIMARY ROUTE SHIELD
ON LIGHT PAVEMENT

NOTES:

1. SEE TABLE FOR GRID UNIT (GU) SIZE AND SHIELD AND NUMERIAL DIMENSIONS.
2. FOR THE NUMBER "1", DIVIDE NUMERAL WIDTH BY 4.

GRID UNIT (GU) SIZE	SHIELD HEIGHT	SHIELD WIDTH		NUMERAL DIMENSIONS	
		2 DIGITS	3 DIGITS	HEIGHT	WIDTH (SEE NOTE 2)
6"	15'-0"	6'-0"	7'-6"	9'-0"	1'-6"
7"	17'-6"	7'-0"	8'-9"	10'-6"	1'-9"
8"	20'-0"	8'-0"	10'-0"	12'-0"	2'-0"

VDOT
ROAD AND BRIDGE STANDARDS

SHEET 14 OF 15
1340.23

REVISION DATE
NEW 01/15

A COPY OF THE ORIGINAL SEALED AND SIGNED DRAWING IS ON FILE IN THE CENTRAL OFFICE.

PAVEMENT WORD, SYMBOL, AND ARROW MARKINGS

ROUTE SHIELD DETAILS

VIRGINIA DEPARTMENT OF TRANSPORTATION

SPECIFICATION REFERENCE
704

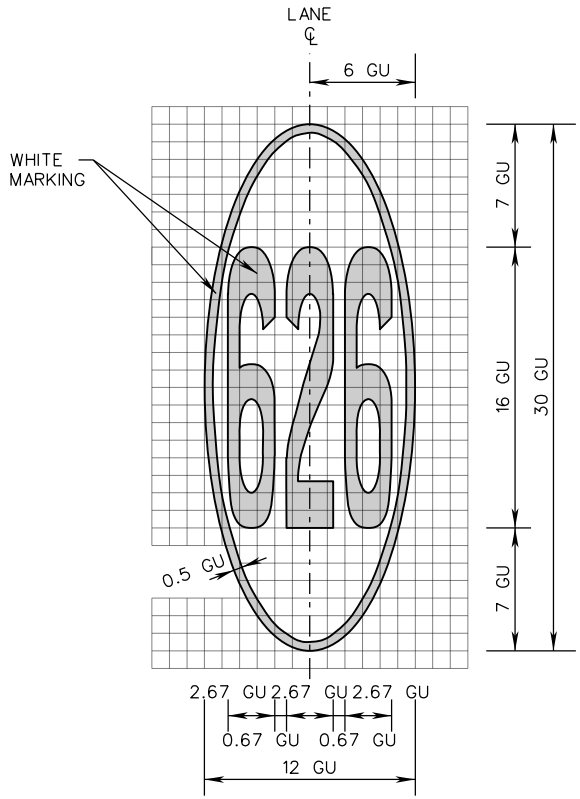

3 DIGITS VIRGINIA SECONDARY ROUTE SHIELD ON DARK PAVEMENT

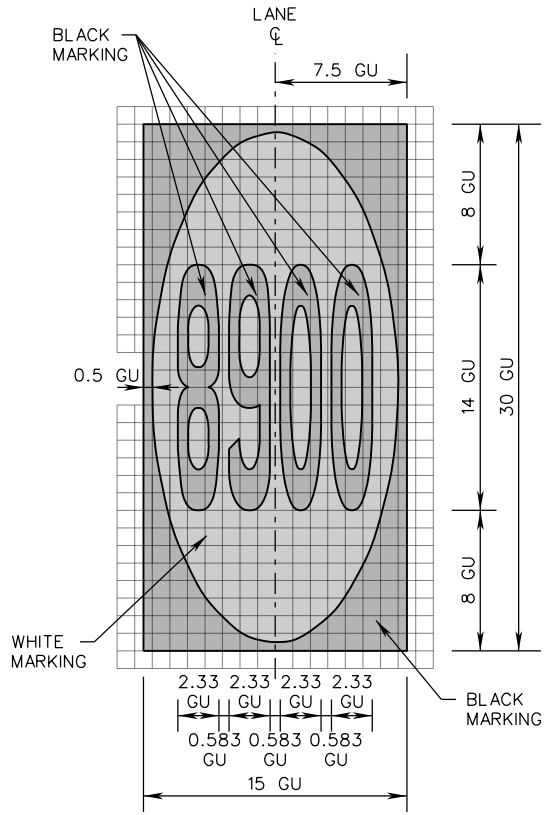

4 DIGITS VIRGINIA SECONDARY ROUTE SHIELD ON LIGHT PAVEMENT

NOTES:

1. SEE TABLE FOR GRID UNIT (GU) SIZE AND SHIELD AND NUMERIAL DIMENSIONS.
2. FOR THE NUMBER "1", DIVIDE NUMERAL WIDTH BY 4.

GRID UNIT (GU) SIZE	SHIELD HEIGHT	SHIELD WIDTH		NUMERAL DIMENSIONS			
				3 DIGITS		4 DIGITS	
		3 DIGITS	4 DIGITS	HEIGHT	WIDTH (SEE NOTE 2)	HEIGHT	WIDTH (SEE NOTE 2)
6"	15'-0"	6'-0"	7'-6"	8'-0"	1'-4"	7'-0"	1'-2"
7"	17'-6"	7'-0"	8'-9"	9'-4"	1'-6⅔"	8'-2"	1'-4⅓"
8"	20'-0"	8'-0"	10'-0"	10'-8"	1'-9⅓"	9'-4"	1'-6⅔"

SPECIFICATION REFERENCE

704

A COPY OF THE ORIGINAL SEALED AND SIGNED DRAWING IS ON FILE IN THE CENTRAL OFFICE.

PAVEMENT WORD, SYMBOL, AND ARROW MARKINGS

ROUTE SHIELD DETAILS

VIRGINIA DEPARTMENT OF TRANSPORTATION

VDOT

ROAD AND BRIDGE STANDARDS

REVISION DATE NEW 01/15

SHEET 15 OF 15

1340.24

STANDARD

THIS PAGE INTENTIONALLY LEFT BLANK

VDOT
ROAD AND BRIDGE STANDARDS

SHEET 1 OF 1

REVISION DATE

TITLE

VIRGINIA DEPARTMENT OF TRANSPORTATION

SPECIFICATION REFERENCE