SECTION 1000

BOX CULVERTS

STANDARD

THIS PAGE INTENTIONALLY LEFT BLANK

VDOT
ROAD AND BRIDGE STANDARDS

SHEET 1 OF 1

REVISION DATE

TITLE

VIRGINIA DEPARTMENT OF TRANSPORTATION

SPECIFICATION REFERENCE

STANDARD	TITLE	PAGE
BC-GEN	GENERAL BOX CULVERT ASSUMPTIONS	1000.05
BCB-DT	OVERSIZE BOX CULVERT STANDARD DETAILS	1001.01
	OVERSIZE BOX CULVERT STANDARD DETAILS	1001.02
BCB-02	OVERSIZE BOX CULVERT (0 TO 2 FT. FILLS)	1001.03
BCB-05	OVERSIZE BOX CULVERT (2 TO 5 FT. FILLS)	1001.04
BCB-10	OVERSIZE BOX CULVERT (5 TO 10 FT. FILLS)	1001.05
BCB-20	OVERSIZE BOX CULVERT (10 TO 20 FT. FILLS)	1001.06
BCB-30	OVERSIZE BOX CULVERT (20 TO 30 FT. FILLS)	1001.07
BCB-40	OVERSIZE BOX CULVERT (30 TO 40 FT. FILLS)	1001.08
BCB-50	OVERSIZE BOX CULVERT (40 TO 50 FT. FILLS)	1001.09
BCS-DT	SINGLE BOX CULVERT STANDARD DETAILS	1002.01
	SINGLE BOX CULVERT STANDARD DETAILS	1002.02
BCS-02	SINGLE BOX CULVERT (0 TO 2 FT. FILLS)	1002.03
	SINGLE BOX CULVERT (0 TO 2 FT. FILLS)	1002.04
BCS-05	SINGLE BOX CULVERT (2 TO 5 FT. FILLS)	1002.05
	SINGLE BOX CULVERT (2 TO 5 FT. FILLS)	1002.06
BCS-10	SINGLE BOX CULVERT (5 TO 10 FT. FILLS)	1002.07
	SINGLE BOX CULVERT (5 TO 10 FT. FILLS)	1002.08
BCS-20	SINGLE BOX CULVERT (10 TO 20 FT. FILLS)	1002.09
	SINGLE BOX CULVERT (10 TO 20 FT. FILLS)	1002.10
BCS-30	SINGLE BOX CULVERT (20 TO 30 FT. FILLS)	1002.11
	SINGLE BOX CULVERT (20 TO 30 FT. FILLS)	1002.12
BCS-40	SINGLE BOX CULVERT (30 TO 40 FT. FILLS)	1002.13
	SINGLE BOX CULVERT (30 TO 40 FT. FILLS)	1002.14
BCS-50	SINGLE BOX CULVERT (40 TO 50 FT. FILLS)	1002.15
	SINGLE BOX CULVERT (40 TO 50 FT. FILLS)	1002.16
BCD-DT	DOUBLE BOX CULVERT STANDARD DETAILS	1003.01
	DOUBLE BOX CULVERT STANDARD DETAILS	1003.02
	DOUBLE BOX CULVERT STANDARD DETAILS	1003.03
	DOUBLE BOX CULVERT BLANK SHEET	1003.04
BCD-02	DOUBLE BOX CULVERT (0 TO 2 FT. FILLS)	1003.05
	DOUBLE BOX CULVERT (0 TO 2 FT. FILLS)	1003.06

INDEX OF SHEETS
SECTION 1000-BOX CULVERTS

VIRGINIA DEPARTMENT OF TRANSPORTATION

VDOT
ROAD AND BRIDGE STANDARDS

REVISION DATE	SHEET 1 OF 4
07/11	1000.01

STANDARD	TITLE	PAGE
BCD-05	DOUBLE BOX CULVERT (2 TO 5 FT. FILLS)	1003.07
	DOUBLE BOX CULVERT (2 TO 5 FT. FILLS)	1003.08
BCD-10	DOUBLE BOX CULVERT (5 TO 10 FT. FILLS)	1003.09
	DOUBLE BOX CULVERT (5 TO 10 FT. FILLS)	1003.10
BCD-20	DOUBLE BOX CULVERT (10 TO 20 FT. FILLS)	1003.11
	DOUBLE BOX CULVERT (10 TO 20 FT. FILLS)	1003.12
BCD-30	DOUBLE BOX CULVERT (20 TO 30 FT. FILLS)	1003.13
	DOUBLE BOX CULVERT (20 TO 30 FT. FILLS)	1003.14
BCD-40	DOUBLE BOX CULVERT (30 TO 40 FT. FILLS)	1003.15
	DOUBLE BOX CULVERT (30 TO 40 FT. FILLS)	1003.16
BCD-50	DOUBLE BOX CULVERT (40 TO 50 FT. FILLS)	1003.17
	DOUBLE BOX CULVERT (40 TO 50 FT. FILLS)	1003.18
BCT-DT	TRIPLE BOX CULVERT STANDARD DETAILS	1004.01
	TRIPLE BOX CULVERT STANDARD DETAILS	1004.02
	TRIPLE BOX CULVERT STANDARD DETAILS	1004.03
	TRIPLE BOX CULVERT BLANK SHEET	1004.04
BCT-02	TRIPLE BOX CULVERT (0 TO 2 FT. FILLS)	1004.05
	TRIPLE BOX CULVERT (0 TO 2 FT. FILLS)	1004.06
BCT-05	TRIPLE BOX CULVERT (2 TO 5 FT. FILLS)	1004.07
	TRIPLE BOX CULVERT (2 TO 5 FT. FILLS)	1004.08
BCT-10	TRIPLE BOX CULVERT (5 TO 10 FT. FILLS)	1004.09
	TRIPLE BOX CULVERT (5 TO 10 FT. FILLS)	1004.10
BCT-20	TRIPLE BOX CULVERT (10 TO 20 FT. FILLS)	1004.11
	TRIPLE BOX CULVERT (10 TO 20 FT. FILLS)	1004.12
BCT-30	TRIPLE BOX CULVERT (20 TO 30 FT. FILLS)	1004.13
	TRIPLE BOX CULVERT (20 TO 30 FT. FILLS)	1004.14
BCT-40	TRIPLE BOX CULVERT (30 TO 40 FT. FILLS)	1004.15
	TRIPLE BOX CULVERT (30 TO 40 FT. FILLS)	1004.16
BCT-50	TRIPLE BOX CULVERT (40 TO 50 FT. FILLS)	1004.17
	TRIPLE BOX CULVERT (40 TO 50 FT. FILLS)	1004.18
BCQ-DT	QUADRUPLE BOX CULVERT STANDARD DETAILS	1005.01
	QUADRUPLE BOX CULVERT STANDARD DETAILS	1005.02
	QUADRUPLE BOX CULVERT STANDARD DETAILS	1005.03
	QUADRUPLE BOX CULVERT BLANK SHEET	1005.04

VDOT
ROAD AND BRIDGE STANDARDS

SHEET 2 OF 4	REVISION DATE
1000.02	07.11

INDEX OF SHEETS
SECTION 1000-BOX CULVERTS

VIRGINIA DEPARTMENT OF TRANSPORTATION

STANDARD	TITLE	PAGE
BCQ-02	QUADRUPLE BOX CULVERT (0 TO 2 FT. FILLS)	1005.05
	QUADRUPLE BOX CULVERT (0 TO 2 FT. FILLS)	1005.06
BCQ-05	QUADRUPLE BOX CULVERT (2 TO 5 FT. FILLS)	1005.07
	QUADRUPLE BOX CULVERT (2 TO 5 FT. FILLS)	1005.08
BCQ-10	QUADRUPLE BOX CULVERT (5 TO 10 FT. FILLS)	1005.09
	QUADRUPLE BOX CULVERT (5 TO 10 FT. FILLS)	1005.10
BCQ-20	QUADRUPLE BOX CULVERT (10 TO 20 FT. FILLS)	1005.11
	QUADRUPLE BOX CULVERT (10 TO 20 FT. FILLS)	1005.12
BCQ-30	QUADRUPLE BOX CULVERT (20 TO 30 FT. FILLS)	1005.13
	QUADRUPLE BOX CULVERT (20 TO 30 FT. FILLS)	1005.14
BCQ-40	QUADRUPLE BOX CULVERT (30 TO 40 FT. FILLS)	1005.15
	QUADRUPLE BOX CULVERT (30 TO 40 FT. FILLS)	1005.16
BCQ-50	QUADRUPLE BOX CULVERT (40 TO 50 FT. FILLS)	1005.17
	QUADRUPLE BOX CULVERT (40 TO 50 FT. FILLS)	1005.18
BCW-11	WING DETAIL 1.5:1 FILL SLOPE - TYPE I	1006.01
	WING DETAIL 1.5:1 FILL SLOPE - TYPE I	1006.02
	WING DETAIL 1.5:1 FILL SLOPE - TYPE I	1006.03
	WING DETAIL 1.5:1 FILL SLOPE - TYPE I	1006.04
	WING DETAIL 1.5:1 FILL SLOPE - TYPE I	1006.05
	WING DETAIL 1.5:1 FILL SLOPE - TYPE I	1006.06
	WING DETAIL 1.5:1 FILL SLOPE - TYPE I	1006.07
	WING DETAIL 1.5:1 FILL SLOPE - TYPE I	1006.08
BCW-12	WING DETAIL 1.5:1 FILL SLOPE - TYPE II	1006.09
	WING DETAIL 1.5:1 FILL SLOPE - TYPE II	1006.10
	WING DETAIL 1.5:1 FILL SLOPE - TYPE II	1006.11
	WING DETAIL 1.5:1 FILL SLOPE - TYPE II	1006.12
	WING DETAIL 1.5:1 FILL SLOPE - TYPE II	1006.13
	WING DETAIL 1.5:1 FILL SLOPE - TYPE II	1006.14
	WING DETAIL 1.5:1 FILL SLOPE - TYPE II	1006.15
	WING DETAIL 1.5:1 FILL SLOPE - TYPE II	1006.16

INDEX OF SHEETS
SECTION 1000-BOX CULVERTS

VIRGINIA DEPARTMENT OF TRANSPORTATION

VDOT
ROAD AND BRIDGE STANDARDS

REVISION DATE 07/12

SHEET 3 OF 4

1000.03

STANDARD	TITLE	PAGE
BCW-21	WING DETAIL 2:1 FILL SLOPE - TYPE I	1007.01
	WING DETAIL 2:1 FILL SLOPE - TYPE I	1007.02
	WING DETAIL 2:1 FILL SLOPE - TYPE I	1007.03
	WING DETAIL 2:1 FILL SLOPE - TYPE I	1007.04
	WING DETAIL 2:1 FILL SLOPE - TYPE I	1007.05
	WING DETAIL 2:1 FILL SLOPE - TYPE I	1007.06
	WING DETAIL 2:1 FILL SLOPE - TYPE I	1007.07
	WING DETAIL 2:1 FILL SLOPE - TYPE I	1007.08
BCW-22	WING DETAIL 2:1 FILL SLOPE - TYPE II	1007.09
	WING DETAIL 2:1 FILL SLOPE - TYPE II	1007.10
	WING DETAIL 2:1 FILL SLOPE - TYPE II	1007.11
	WING DETAIL 2:1 FILL SLOPE - TYPE II	1007.12
	WING DETAIL 2:1 FILL SLOPE - TYPE II	1007.13
	WING DETAIL 2:1 FILL SLOPE - TYPE II	1007.14
	WING DETAIL 2:1 FILL SLOPE - TYPE II	1007.15
	WING DETAIL 2:1 FILL SLOPE - TYPE II	1007.16
BCE-01	DETAILS FOR WIDENING EXISTING BOX CULVERTS	1008.01 THRU 1008.04
	DETAILS FOR WIDENING EXISTING BOX CULVERTS	

VDOT
ROAD AND BRIDGE STANDARDS

SHEET 4 OF 4 | REVISION DATE

1000.04

INDEX OF SHEETS
SECTION 1000-BOX CULVERTS

VIRGINIA DEPARTMENT OF TRANSPORTATION

NOTES TO DESIGNER:

The designer shall ensure that the following checks are undertaken to ensure the suitability of the standard box culvert and wingwall designs to a particular site.

General:

The designer shall review the site investigation results and material testing to confirm the site exposure and environment is within the scope of these standards. This includes highly saline environments, maritime environments including splash zones and other aggressive chemicals.

Box Culverts:

The designer shall review the geometry and applied loading of the proposed site to ensure that the design is within the scope of these standards.

AASHTO Crack Control Criteria, Article 5.7.3.4, is ignored.

Wingwalls:

The standard wingwall designs do not allow for increased earth pressure loads due to seismic effects.

The designer shall ensure that the overall slip circle stability and wall deflections are checked in accordance with Section 11.6.2 of AASHTO LRFD.

The designer shall ensure the friction angle for founding stratum, ffound', is a minimum of 32 degrees for 2:1 Slope Wingwalls and 34 degrees for 1.5:1 Slope Wingwalls.
Where the founding stratum is a cohesive soil, the designer shall ensure that the sliding stability of the wall is verified.

Where the designer proposes to improve the foundation strata to allow the use of the standard wingwall designs, the designer shall ensure that additional sliding and bearing pressure checks are carried out at the base of the improved soil layer.

In locations where it is not practical to provide the back of wall drainage system as indicated on the drawings, the designer shall re-check the wingwall designs taking into account the site groundwater conditions. Special consideration of groundwater conditions may also be required in locations where the watercourse is prone to rapid and significant changes in water level, including seepage effects where appropriate.

The designer shall calculate the nominal bearing resistance of the foundation material using the semi-empirical approach given in AASHTO LRFD Section 10.6.3.1.3 using the width of footing at the low and high ends of the wingwall, dimensions N1 and N2, for the footing width B. The designer shall check that the factored bearing resistance at each end of the wall, qR, is greater than the minimum values given in the table below. Where the factored bearing resistance is below the minimum values given in the table the designer shall re-design the wall based on an increased footing width or provide improvement to the foundation bearing resistance such that its bearing resistance exceeds the minimum values.

2:1 Slope Wingwalls Type I

N1 OR N2 (FT.)	$q_{r,min.}$ (ksf)	N1 OR N2 (FT.)	$q_{r,min.}$ (ksf)
3'-0"	0.85	9'-0"	3.92
3'-6"	1.11	9'-6"	3.99
4'-0"	1.27	10'-0"	4.07
4'-6"	1.71	11'-0"	4.28
5'-0"	2.03	12'-0"	4.36
5'-6"	2.36	12'-6"	4.46
6'-0"	2.70	13'-0"	4.56
6'-6"	3.05	14'-0"	4.56
7'-0"	3.10	14'-6"	4.66
7'-6"	3.45	15'-0"	4.99
8'-0"	3.51	15'-6"	5.10
8'-6"	3.86		

2:1 Slope Wingwalls Type II

N1 OR N2 (FT.)	$q_{r,min.}$ (ksf)	N1 OR N2 (FT.)	$q_{r,min.}$ (ksf)
3'-0"	0.48	8'-0"	4.13
4'-0"	1.40	8'-6"	4.16
4'-6"	1.71	9'-0"	4.21
5'-0"	2.03	9'-6"	4.43
5'-6"	2.36	10'-0"	5.19
6'-0"	2.70	10'-6"	5.23
6'-6"	3.05	11'-0"	5.61
7'-0"	3.10	12'-0"	5.40
7'-6"	3.76	13'-0"	5.55

1.5:1 Slope Wingwalls Type I

N1 OR N2 (FT.)	$q_{r,min.}$ (ksf)	N1 OR N2 (FT.)	$q_{r,min.}$ (ksf)
3'-0"	1.02	8'-6"	3.44
3'-6"	1.15	9'-0"	3.57
4'-0"	1.50	9'-6"	3.71
4'-3"	1.68	10'-0"	4.10
4'-6"	1.88	11'-6"	4.28
4'-9"	2.08	12'-0"	4.42
5'-0"	1.98	12'-6"	4.55
5'-6"	2.40	13'-6"	4.60
6'-0"	2.53	15'-0"	4.95
6'-6"	2.65	15'-6"	5.32
7'-0"	2.78	16'-0"	5.70
7'-6"	3.18	16'-6"	6.11
		17'-6"	6.15

1.5:1 Slope Wingwalls Type II

N1 OR N2 (FT.)	$q_{r,min.}$ (ksf)	N1 OR N2 (FT.)	$q_{r,min.}$ (ksf)
3'-0"	0.55	8'-0"	4.26
4'-0"	1.50	8'-6"	4.35
4'-3"	1.68	9'-0"	4.64
4'-6"	1.88	9'-6"	4.93
4'-9"	2.08	10'-0"	5.04
5'-0"	2.28	10'-6"	5.49
5'-3"	2.49	11'-0"	5.83
5'-6"	2.71	11'-6"	5.93
5'-9"	2.93	12'-0"	6.04
6'-0"	3.15	12'-6"	6.16
6'-6"	3.61	13'-0"	6.28
7'-0"	3.70	13'-3"	6.51
7'-6"	4.17	14'-0"	6.53
		15'-0"	6.48

A COPY OF THE ORIGINAL SEALED AND SIGNED DRAWING IS ON FILE IN THE CENTRAL OFFICE.

SPECIFICATION REFERENCE	NOTES TO DESIGNER BOX CULVERTS AND WINGS VIRGINIA DEPARTMENT OF TRANSPORTATION	VDOT ROAD AND BRIDGE STANDARDS	
		REVISION DATE	SHEET 1 OF 1
		07/12	1000.05

STANDARD

THIS PAGE INTENTIONALLY LEFT BLANK

VDOT
ROAD AND BRIDGE STANDARDS

SHEET 1 OF 1

REVISION DATE

TITLE

VIRGINIA DEPARTMENT OF TRANSPORTATION

SPECIFICATION REFERENCE

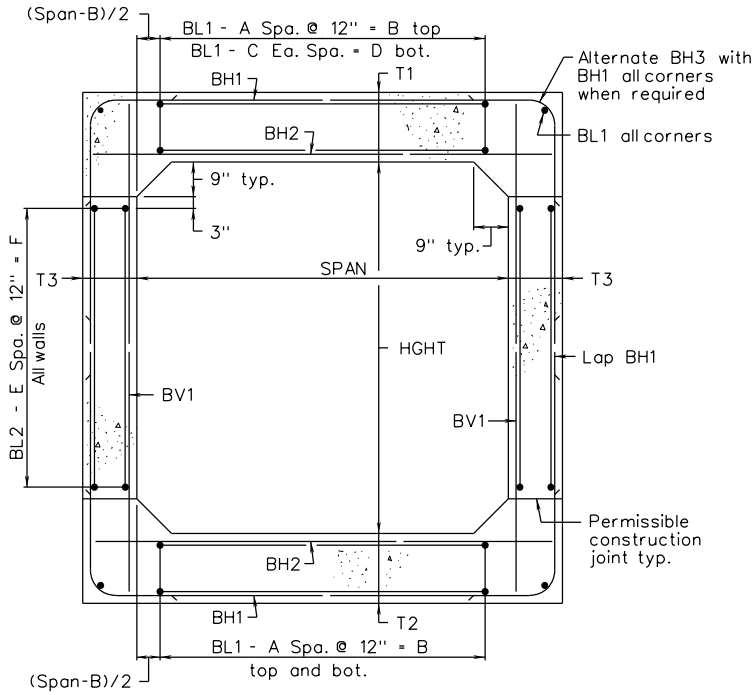

TYPICAL SECTION

GENERAL NOTES:

Capacity: AASHTO HL-93 Loading

Specifications:

Construction: Virginia Department of Transportation Road and Bridge Specifications.

Design: AASHTO LRFD Bridge Design Specifications, 5th Edition 2010; 2011 Interim Specifications; and VDOT Modifications.

All concrete shall be Class A4.

Deformed reinforcing bars shall conform to ASTM A615, Grade 60. All reinforcing bar dimensions on the detailed drawings are to centers of bars except where otherwise noted and are subject to fabrication and construction tolerances.

Construction joints shall be constructed and bonded in accordance with the current VDOT Road and Bridge Specifications.

Barrels more than 35' in length shall be poured in sections by providing vertical construction joints, not exceeding 25' between joints nor more than 30' from ends of barrels.

** Bars BH1 and BH3 shall have a pin diameter of 24 bar diameters.

Dimensions on bar diagrams are out-to-out of bars. Bars are straight unless otherwise shown.

The number of BL1 and BL2 bars shown in the table is the number of longitudinal bars shown in the typical section and may not equal the total number of bars required. BL1 and BL2 bars shall have a lap of 30 bar diameters at splices. At construction joints, first placed bars shall project 30 bar diameters beyond the joint. Estimated QUAN./LF shown for reinforcing steel does not include the quantity for laps of BL1 and BL2 bars. The additional weight per longitudinal lap is shown in the table.

The minimum cover of main reinforcing bars shall be 2½" from the face of the concrete for culverts under 0 to 2 foot fills and shall be 2" from the face of the concrete for all other culverts.

All reinforcing steel for culverts under 0 to 2 foot fills shall be low carbon/chromium reinforcing steel conforming to ASTM A1035.

At the Contractor's option, BV1 bars may be spliced at the permissible construction joint in order to facilitate construction. No additional compensation shall be provided for the increase in reinforcing steel quantity due to the splices.

Headwall quantities shown assume wingwalls are to be built at a 45° angle to the headwall.

The designs are applicable to the fill height and other conditions indicated. Any change in the conditions invalidates these designs.

Wingwalls referenced by letter apply when the acceptable foundation level is the same for both box and wings. If foundation levels are different, the height of the wingwall shall be adjusted by selection of another lettered wingwall of the appropriate height. For wingwall details, refer to standard series BCW for the appropriate fill slope.

For details of extending existing boxes, refer to standard BCE-01.

For modification of details for skewed culverts, see the skewed box details included in the road plans.

This standard shall be used with the BCB standard series.

A COPY OF THE ORIGINAL SEALED AND SIGNED DRAWING IS ON FILE IN THE CENTRAL OFFICE.

SPECIFICATION REFERENCE	OVERSIZE BOX CULVERTS STANDARD DETAILS VIRGINIA DEPARTMENT OF TRANSPORTATION	VDOT ROAD AND BRIDGE STANDARDS REVISION DATE 07/12	SHEET 1 OF 2 1001.01

BCB-DT

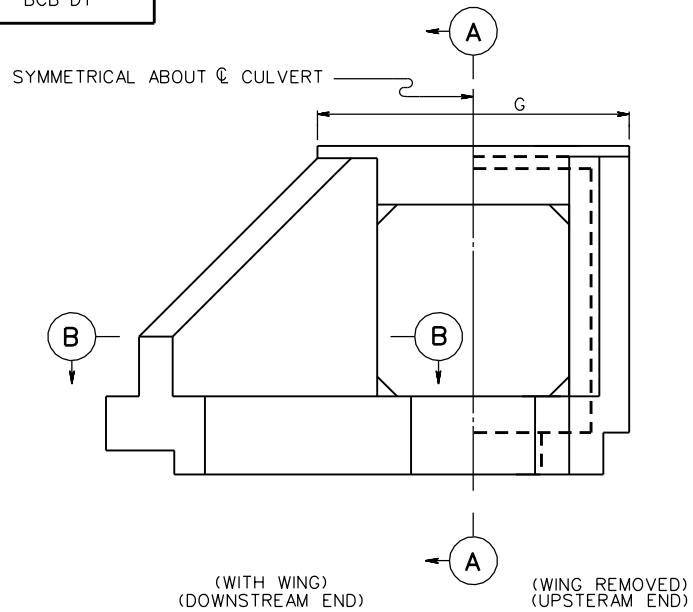

END ELEVATION

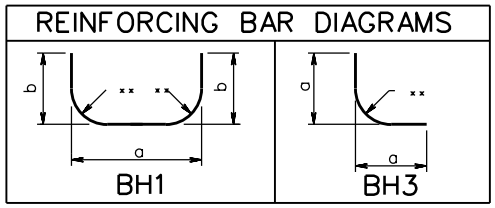

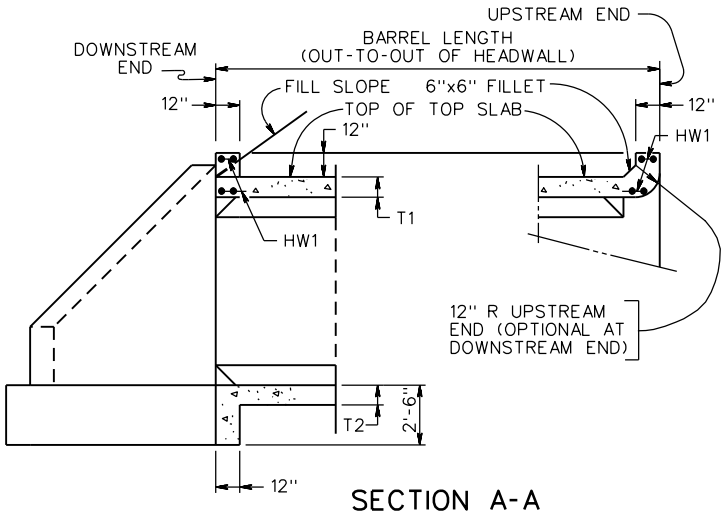

SECTION A-A
(With Wing)

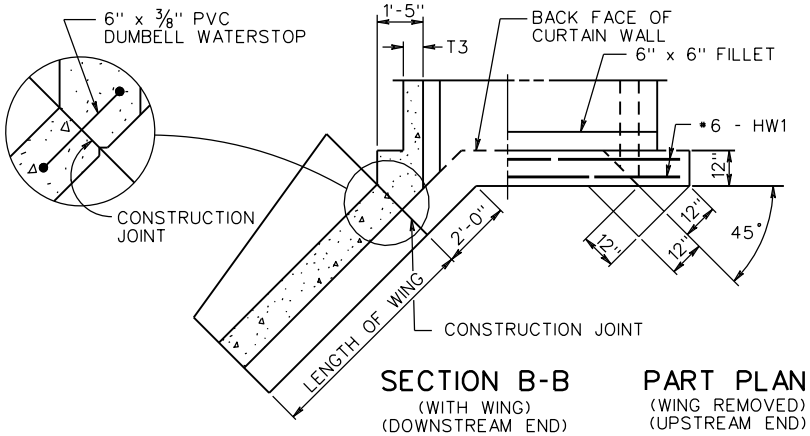

SECTION B-B
(WITH WING)
(DOWNSTREAM END)

PART PLAN
(WING REMOVED)
(UPSTREAM END)

VDOT
ROAD AND BRIDGE STANDARDS

SHEET 2 OF 2

1001.02

REVISION DATE
07/11

OVERSIZED BOX CULVERT

STANDARD DETAILS

VIRGINIA DEPARTMENT OF TRANSPORTATION

SPECIFICATION REFERENCE

BCB-02

FOR TYPICAL SECTION, NOTES AND OTHER DETAILS, REFER TO STANDARD BCB-DT.

DIMENSIONS											REINFORCING STEEL																
SPAN	HGHT	T1	T2	T3							BH1					BH2			BH3				BV1				
(FT.)	(FT.)	TOP SLAB (IN.)	BOTTOM SLAB (IN.)	WALL (IN.)	A	B	C	D	E	F	SIZE	SPACING c-c	a	b	LENGTH	SIZE	SPACING c-c	LENGTH	SIZE	SPACING c-c	a	LENGTH	SIZE	SPACING c-c	LENGTH	NO. BL1 #4 BARS	NO. BL2 #3 BARS
12	14	10¾"	10¾"	8"	11	11'-0"	22	11'-0"	12	12'-0"	5	7"	13'-0"	8'-4¾"	29'-2"	8	7"	13'-0"	4	7"	4'-6½"	8'-10"	5	8½"	15'-5"	63	52
12	16	11¾"	11¾"	8¼"	11	11'-0"	22	11'-0"	14	14'-0"	6	6"	13'-½"	9'-9¼"	31'-10"	8	6"	13'-0"	--	---	-----	-----	5	5½"	17'-8"	63	60
14	8	10¾"	10¾"	8"	13	13'-0"	26	13'-0"	6	6'-0"	5	7"	15'-0"	5'-4¾"	25'-2"	7	7"	15'-0"	4	7"	4'-3⅝"	8'-4"	4	12"	9'-5"	73	28
14	10	11"	11"	8"	13	13'-0"	26	13'-0"	8	8'-0"	5	8½"	15'-0"	6'-5"	27'-2"	8	8½"	15'-0"	4	8½"	4'-3⅝"	8'-4"	4	12"	11'-6"	73	36
14	12	11"	11"	8"	13	13'-0"	26	13'-0"	10	10'-0"	5	7½"	15'-0"	7'-5"	29'-2"	8	7½"	15'-0"	4	7½"	4'-3⅝"	8'-4"	5	12"	13'-6"	73	44
14	14	11½"	11½"	8"	13	13'-0"	26	13'-0"	12	12'-0"	6	6½"	15'-0"	8'-9"	31'-9"	8	6½"	15'-0"	--	---	-----	-----	5	8"	15'-7"	73	52
14	16	12½"	12½"	8¼"	13	13'-0"	26	13'-0"	14	14'-0"	6	5½"	15'-½"	9'-10"	34'-0"	8	5½"	15'-0"	--	---	-----	-----	6	9"	17'-9"	73	60

			QUAN./LF		HEADWALLS							
SPAN	HGHT				G	HW1						
(FT.)	(FT.)	REINFORCING STEEL (LBS/LONG. JT)	CONCRETE CLASS A4 (CY/LF)	REINFORCING STEEL (LBS/LF)	HEADWALL LENGTH	SIZE	LENGTH	INLET CONCRETE CL.A4 (CY)	INLET REINFORCING STEEL (LBS)	OUTLET CONCRETE CL. A4 (CY)	OUTLET REINFORCING STEEL (LBS)	WINGWALL
12	14	70.961	1.591	376.903	14'-10"	6	14'-6"	2.927	87.116	2.961	87.116	X
12	16	73.785	1.793	479.298	14'-10"	6	14'-6"	3.064	87.116	3.097	87.116	BB
14	8	70.839	1.431	305.160	16'-10"	6	16'-6"	2.557	99.132	2.597	99.132	L
14	10	73.663	1.554	302.186	16'-10"	6	16'-6"	2.735	99.132	2.775	99.132	P
14	12	76.487	1.649	360.576	16'-10"	6	16'-6"	2.920	99.132	2.961	99.132	T
14	14	79.311	1.790	445.148	16'-10"	6	16'-6"	3.092	99.132	3.132	99.132	X
14	16	82.135	2.004	543.465	16'-10"	6	16'-6"	3.222	99.132	3.262	99.132	BB

A COPY OF THE ORIGINAL SEALED AND SIGNED DRAWING IS ON FILE IN THE CENTRAL OFFICE.

SPECIFICATION REFERENCE

OVERSIZE BOX CULVERTS

0 TO 2 FT. FILLS

VIRGINIA DEPARTMENT OF TRANSPORTATION

VDOT

ROAD AND BRIDGE STANDARDS

REVISION DATE 07/11

SHEET 1 OF 1

1001.03

BCB-05

FOR TYPICAL SECTION, NOTES AND OTHER DETAILS, REFER TO STANDARD BCB-DT.

DIMENSIONS											REINFORCING STEEL																
SPAN	HGHT	T1	T2	T3							BH1					BH2			BH3				BV1				
(FT.)	(FT.)	TOP SLAB (IN.)	BOTTOM SLAB (IN.)	WALL (IN.)	A	B	C	D	E	F	SIZE	SPACING c-c	a	b	LENGTH	SIZE	SPACING c-c	LENGTH	SIZE	SPACING c-c	a	LENGTH	SIZE	SPACING c-c	LENGTH	NO. BL1 #4 BARS	NO. BL2 #3 BARS
12	14	11"	11"	8"	11	11'-0"	11	11'-0"	12	12'-0"	5	7"	13'-0"	8'-5"	29'-2"	8	7"	13'-0"	4	7"	4'-6½"	8'-10"	6	8½"	15'-6"	52	52
12	16	12¼"	12¼"	8½"	11	11'-0"	11	11'-0"	14	14'-0"	6	6½"	13'-1"	9'-10"	31'-11"	8	6½"	13'-0"	4	6½"	5'-1"	9'-11"	6	6"	17'-9"	52	60
14	8	10¼"	10¼"	8"	13	13'-0"	13	13'-0"	6	6'-0"	5	6"	15'-0"	5'-4¼"	25'-1"	7	6"	15'-0"	--	---	-----	-----	4	7½"	9'-5"	60	28
14	10	10¼"	10¼"	8"	13	13'-0"	13	13'-0"	8	8'-0"	6	7"	15'-0"	6'-4¼"	26'-11"	8	7"	15'-0"	--	---	-----	-----	4	7½"	11'-5"	60	36
14	12	10½"	10½"	8"	13	13'-0"	13	13'-0"	10	10'-0"	5	5½"	15'-0"	7'-4½"	29'-1"	7	5½"	15'-0"	--	---	-----	-----	5	10"	13'-5"	60	44
14	14	11½"	11½"	8½"	13	13'-0"	13	13'-0"	12	12'-0"	5	6½"	15'-1"	8'-5½"	31'-3"	8	6½"	15'-0"	3	6½"	4'-7"	8'-11"	6	10"	15'-7"	60	52
14	16	12½"	12½"	8¾"	13	13'-0"	13	13'-0"	14	14'-0"	6	6"	15'-1"	9'-10"	34'-0"	8	6"	15'-1"	--	---	-----	-----	6	6"	17'-9"	60	60

			QUAN./LF		HEADWALLS							
SPAN	HGHT				G	HW1						
(FT.)	(FT.)	REINFORCING STEEL (LBS/LONG. JT)	CONCRETE CLASS A4 (CY/LF)	REINFORCING STEEL (LBS/LF)	HEADWALL LENGTH	SIZE	LENGTH	INLET CONCRETE CL.A4 (CY)	INLET REINFORCING STEEL (LBS)	OUTLET CONCRETE CL. A4 (CY)	OUTLET REINFORCING STEEL (LBS)	WINGWALL
12	14	61.776	1.610	386.454	14'-10"	6	14'-6"	2.922	87.116	2.956	87.116	X
12	16	64.600	1.856	521.464	14'-10"	6	14'-6"	3.053	87.116	3.086	87.116	BB
14	8	59.984	1.384	298.025	16'-10"	6	16'-6"	2.570	99.132	2.611	99.132	L
14	10	62.808	1.479	353.948	16'-10"	6	16'-6"	2.756	99.132	2.796	99.132	P
14	12	65.632	1.602	360.712	16'-10"	6	16'-6"	2.934	99.132	2.975	99.132	T
14	14	68.456	1.839	412.213	16'-10"	6	16'-6"	3.092	99.132	3.132	99.132	X
14	16	71.280	2.058	537.499	16'-10"	6	16'-6"	3.194	99.132	3.234	99.132	BB

A COPY OF THE ORIGINAL SEALED AND SIGNED DRAWING IS ON FILE IN THE CENTRAL OFFICE.

VDOT
ROAD AND BRIDGE STANDARDS

SHEET 1 OF 1
1001.04

REVISION DATE
07/11

OVERSIZE BOX CULVERTS

2 TO 5 FT. FILLS

VIRGINIA DEPARTMENT OF TRANSPORTATION

SPECIFICATION REFERENCE

FOR TYPICAL SECTION, NOTES AND OTHER DETAILS, REFER TO STANDARD BCB-DT.

DIMENSIONS											REINFORCING STEEL																
SPAN	HGHT	T1	T2	T3							BH1					BH2			BH3				BV1				
(FT.)	(FT.)	TOP SLAB (IN.)	BOTTOM SLAB (IN.)	WALL (IN.)	A	B	C	D	E	F	SIZE	SPACING c-c	a	b	LENGTH	SIZE	SPACING c-c	LENGTH	SIZE	SPACING c-c	a	LENGTH	SIZE	SPACING c-c	LENGTH	NO. BL1 #4 BARS	NO. BL2 #3 BARS
12	14	11½"	11½"	9"	11	11'-0"	11	11'-0"	12	12'-0"	5	6½"	13'-2"	8'-5½"	29'-5"	8	6½"	13'-2"	4	6½"	4'-7"	8'-11"	6	7½"	15'-7"	52	52
12	16	12"	12"	10½"	11	11'-0"	11	11'-0"	14	14'-0"	6	6"	13'-5"	9'-9½"	32'-4"	8	6"	13'-5"	--	---	-----	-----	6	6"	17'-8"	52	60
14	8	11¾"	11¾"	8"	13	13'-0"	13	13'-0"	6	6'-0"	6	6½"	15'-0"	5'-9½"	25'-10"	8	6½"	15'-0"	--	---	-----	-----	4	6"	9'-8"	60	28
14	10	11¾"	11¾"	8"	13	13'-0"	13	13'-0"	8	8'-0"	5	6"	15'-0"	6'-5¾"	27'-4"	8	6"	15'-0"	3	6"	4'-3⅝"	8'-5"	4	6"	11'-8"	60	36
14	12	12"	12"	8"	13	13'-0"	13	13'-0"	10	10'-0"	5	6"	15'-0"	7'-6"	29'-4"	8	6"	15'-0"	3	6"	4'-3⅝"	8'-5"	6	12"	13'-8"	60	44
14	14	12½"	12½"	9½"	13	13'-0"	13	13'-0"	12	12'-0"	5	5½"	15'-3"	8'-6½"	31'-8"	8	5½"	15'-3"	3	5½"	4'-8"	9'-1"	7	12"	15'-9"	60	52
14	16	12¾"	12¾"	10½"	13	13'-0"	13	13'-0"	14	14'-0"	6	5½"	15'-5"	9'-10"	34'-3"	8	5½"	15'-5"	--	---	-----	-----	6	7"	17'-9"	60	60

			QUAN./LF		HEADWALLS							
SPAN	HGHT				G	HW1						
(FT.)	(FT.)	REINFORCING STEEL (LBS/LONG. JT)	CONCRETE CLASS A4 (CY/LF)	REINFORCING STEEL (LBS/LF)	HEADWALL LENGTH	SIZE	LENGTH	INLET CONCRETE CL.A4 (CY)	INLET REINFORCING STEEL (LBS)	OUTLET CONCRETE CL. A4 (CY)	OUTLET REINFORCING STEEL (LBS)	WINGWALL
12	14	61.776	1.746	421.454	14'-10"	6	14'-6"	2.911	87.116	2.945	87.116	X
12	16	64.600	2.059	503.510	14'-10"	6	14'-6"	3.003	87.116	3.036	87.116	BB
14	8	59.984	1.521	363.885	16'-10"	6	16'-6"	2.529	99.132	2.569	99.132	L
14	10	62.808	1.619	384.341	16'-10"	6	16'-6"	2.714	99.132	2.754	99.132	P
14	12	65.632	1.741	410.358	16'-10"	6	16'-6"	2.893	99.132	2.933	99.132	T
14	14	68.456	2.029	478.737	16'-10"	6	16'-6"	3.064	99.132	3.105	99.132	X
14	16	71.280	2.276	561.097	16'-10"	6	16'-6"	3.187	99.132	3.227	99.132	BB

A COPY OF THE ORIGINAL SEALED AND SIGNED DRAWING IS ON FILE IN THE CENTRAL OFFICE.

SPECIFICATION REFERENCE

OVERSIZE BOX CULVERTS

5 TO 10 FT. FILLS

VIRGINIA DEPARTMENT OF TRANSPORTATION

VDOT

ROAD AND BRIDGE STANDARDS

REVISION DATE 07/11

SHEET 1 OF 1

1001.05

BCB-20

FOR TYPICAL SECTION, NOTES AND OTHER DETAILS, REFER TO STANDARD BCB-DT.

DIMENSIONS											REINFORCING STEEL																
SPAN	HGHT	T1	T2	T3							BH1					BH2			BH3				BV1			NO. BL1 #4 BARS	NO. BL2 #3 BARS
(FT.)	(FT.)	TOP SLAB (IN.)	BOTTOM SLAB (IN.)	WALL (IN.)	A	B	C	D	E	F	SIZE	SPACING c-c	a	b	LENGTH	SIZE	SPACING c-c	LENGTH	SIZE	SPACING c-c	a	LENGTH	SIZE	SPACING c-c	LENGTH		
12	14	15"	15"	11½"	11	11'-0"	11	11'-0"	12	12'-0"	6	6"	13'-7"	9'-2"	31'-0"	8	6"	13'-6"	--	---	-----	-----	7	9"	16'-2"	52	52
12	16	15¼"	15¼"	13"	11	11'-0"	11	11'-0"	14	14'-0"	6	5½"	13'-10"	10'-2"	33'-3"	8	5½"	13'-9"	3	5½"	5'-4"	10'-5"	8	11"	18'-2"	52	60
14	8	16¾"	16¾"	8"	13	13'-0"	13	13'-0"	6	6'-0"	4	5½"	15'-0"	5'-11"	26'-4"	8	5½"	15'-0"	4	5½"	4'-4"	8'-5"	4	11"	10'-5"	60	28
14	10	16¾"	16¾"	8"	13	13'-0"	13	13'-0"	8	8'-0"	5	5"	15'-0"	7'-1"	28'-6"	8	5"	15'-0"	--	---	-----	-----	5	5"	12'-5"	60	36
14	12	16¾"	16¾"	9½"	13	13'-0"	13	13'-0"	10	10'-0"	5	5"	15'-3"	8'-1"	30'-9"	8	5"	15'-3"	--	---	-----	-----	6	10"	14'-5"	60	44
14	14	16¾"	16¾"	11"	13	13'-0"	13	13'-0"	12	12'-0"	5	5"	15'-6"	9'-1"	33'-0"	8	5"	15'-6"	4	5"	5'-1"	9'-10"	7	10"	16'-5"	60	52
14	16	17"	17"	13½"	13	13'-0"	13	13'-0"	14	14'-0"	6	5"	15'-11"	10'-4"	35'-8"	8	5"	15'-11"	--	---	-----	-----	7	9"	18'-6"	60	60

			QUAN./LF		HEADWALLS							
SPAN	HGHT	REINFORCING STEEL (LBS/LONG. JT)			G	HW1						
(FT.)	(FT.)		CONCRETE CLASS A4 (CY/LF)	REINFORCING STEEL (LBS/LF)	HEADWALL LENGTH	SIZE	LENGTH	INLET CONCRETE CL.A4 (CY)	INLET REINFORCING STEEL (LBS)	OUTLET CONCRETE CL. A4 (CY)	OUTLET REINFORCING STEEL (LBS)	WINGWALL
12	14	61.776	2.287	480.799	14'-10"	6	14'-6"	2.810	87.116	2.844	87.116	X
12	16	64.600	2.614	583.945	14'-10"	6	14'-6"	2.835	87.116	2.868	87.116	CC
14	8	59.984	1.993	374.438	16'-10"	6	16'-6"	2.408	99.132	2.449	99.132	M
14	10	62.808	2.086	459.403	16'-10"	6	16'-6"	2.594	99.132	2.634	99.132	Q
14	12	65.632	2.321	466.628	16'-10"	6	16'-6"	2.779	99.132	2.820	99.132	U
14	14	68.456	2.585	575.524	16'-10"	6	16'-6"	2.913	99.132	2.953	99.132	Y
14	16	71.280	3.032	632.963	16'-10"	6	16'-6"	2.970	99.132	3.009	99.132	CC

A COPY OF THE ORIGINAL SEALED AND SIGNED DRAWING IS ON FILE IN THE CENTRAL OFFICE

VDOT
ROAD AND BRIDGE STANDARDS

SHEET 1 OF 1
1001.06

REVISION DATE
07/11

OVERSIZE BOX CULVERTS

10 TO 20 FT. FILLS

VIRGINIA DEPARTMENT OF TRANSPORTATION

SPECIFICATION REFERENCE

FOR TYPICAL SECTION, NOTES AND OTHER DETAILS, REFER TO STANDARD BCB-DT.

DIMENSIONS											REINFORCING STEEL																
SPAN	HGHT	T1	T2	T3							BH1					BH2			BH3				BV1				
(FT.)	(FT.)	TOP SLAB (IN.)	BOTTOM SLAB (IN.)	WALL (IN.)	A	B	C	D	E	F	SIZE	SPACING c-c	a	b	LENGTH	SIZE	SPACING c-c	LENGTH	SIZE	SPACING c-c	a	LENGTH	SIZE	SPACING c-c	LENGTH	NO. BL1 #4 BARS	NO. BL2 #3 BARS
12	14	19½"	19½"	12½"	11	11'-0"	11	11'-0"	12	12'-0"	5	5½"	13'-9"	9'-4"	31'-9"	8	5½"	13'-9"	4	5½"	5'-4"	10'-4"	7	8"	16'-11"	52	52
12	16	19½"	19½"	15"	11	11'-0"	11	11'-0"	14	14'-0"	6	5½"	14'-2"	10'-6"	34'-4"	8	5½"	14'-1"	3	5½"	5'-8"	11'-2"	8	10"	18'-11"	52	60
14	8	22½"	22½"	8"	13	13'-0"	13	13'-0"	6	6'-0"	4	5"	15'-0"	6'-5"	27'-3"	8	5"	15'-0"	--	---	-----	-----	5	12"	11'-4"	60	28
14	10	22¾"	22¾"	8"	13	13'-0"	13	13'-0"	8	8'-0"	4	5"	15'-0"	7'-5"	29'-4"	8	5"	15'-0"	3	5"	4'-9"	9'-4"	5	6½"	13'-5"	60	36
14	12	22¾"	22¾"	10½"	13	13'-0"	13	13'-0"	10	10'-0"	5	4½"	15'-5"	8'-7"	31'-11"	8	4½"	15'-4"	--	---	-----	-----	6	9"	15'-5"	60	44
14	14	22¾"	22¾"	12½"	13	13'-0"	13	13'-0"	12	12'-0"	5	5"	15'-9"	9'-7"	34'-3"	8	5"	15'-8"	3	5"	5'-7"	10'-11"	5	5"	17'-5"	60	52
14	16	22¾"	22¾"	15"	13	13'-0"	13	13'-0"	14	14'-0"	6	4½"	16'-2"	10'-9"	36'-10"	8	4½"	16'-2"	--	---	-----	-----	7	9"	19'-5"	60	60

			QUAN./LF		HEADWALLS							
SPAN	HGHT				G	HW1						
(FT.)	(FT.)	REINFORCING STEEL (LBS/LONG. JT)	CONCRETE CLASS A4 (CY/LF)	REINFORCING STEEL (LBS/LF)	HEADWALL LENGTH	SIZE	LENGTH	INLET CONCRETE CL.A4 (CY)	INLET REINFORCING STEEL (LBS)	OUTLET CONCRETE CL. A4 (CY)	OUTLET REINFORCING STEEL (LBS)	WINGWALL
12	14	61.776	2.776	529.473	14'-10"	6	14'-6"	2.572	87.116	2.604	87.116	Y
12	16	64.600	3.221	612.127	14'-10"	6	14'-6"	2.588	87.116	2.620	87.116	CC
14	8	59.984	2.538	362.624	16'-10"	6	16'-6"	2.267	99.132	2.308	99.132	N
14	10	62.808	2.655	433.615	16'-10"	6	16'-6"	2.446	99.132	2.486	99.132	R
14	12	65.632	2.991	524.087	16'-10"	6	16'-6"	2.607	99.132	2.647	99.132	V
14	14	68.456	3.337	568.048	16'-10"	6	16'-6"	2.653	99.132	2.692	99.132	Z
14	16	71.280	3.786	702.626	16'-10"	6	16'-6"	2.638	99.132	2.676	99.132	DD

A COPY OF THE ORIGINAL SEALED AND SIGNED DRAWING IS ON FILE IN THE CENTRAL OFFICE

SPECIFICATION REFERENCE

OVERSIZE BOX CULVERTS

20 TO 30 FT. FILLS

VIRGINIA DEPARTMENT OF TRANSPORTATION

VDOT

ROAD AND BRIDGE STANDARDS

REVISION DATE 07/11

SHEET 1 OF 1

1001.07

BCB-40

FOR TYPICAL SECTION, NOTES AND OTHER DETAILS, REFER TO STANDARD BCB-DT.

DIMENSIONS											REINFORCING STEEL																
SPAN	HGHT	T1	T2	T3							BH1					BH2			BH3				BV1				
(FT.)	(FT.)	TOP SLAB (IN.)	BOTTOM SLAB (IN.)	WALL (IN.)	A	B	C	D	E	F	SIZE	SPACING C-C	a	b	LENGTH	SIZE	SPACING C-C	LENGTH	SIZE	SPACING C-C	a	LENGTH	SIZE	SPACING C-C	LENGTH	NO. BL1 #4 BARS	NO. BL2 #3 BARS
12	14	22¾"	22¾"	14"	11	11'-0"	11	11'-0"	12	12'-0"	5	5"	14'-0"	9'-7"	32'-6"	8	5"	14'-0"	4	5"	5'-7"	10'-10"	8	10"	17'-5"	52	52
12	16	22¾"	22¾"	17"	11	11'-0"	11	11'-0"	14	14'-0"	6	5"	14'-6"	10'-9"	35'-2"	8	5"	14'-6"	3	5"	6'-0"	11'-8"	6	5"	19'-5"	52	60
14	8	27¾"	27¾"	9"	13	13'-0"	13	13'-0"	6	6'-0"	4	4½"	15'-2"	6'-10"	28'-4"	8	4½"	15'-1"	--	---	-----	-----	5	9"	12'-3"	60	28
14	10	27¾"	27¾"	8½"	13	13'-0"	13	13'-0"	8	8'-0"	4	4½"	15'-1"	7'-10"	30'-3"	8	4½"	15'-0"	--	---	-----	-----	7	9"	14'-3"	60	36
14	12	27¾"	27¾"	11½"	13	13'-0"	13	13'-0"	10	10'-0"	5	4½"	15'-7"	9'-0"	32'-11"	8	4½"	15'-6"	--	---	-----	-----	5	4½"	16'-3"	60	44
14	14	27¾"	27¾"	14"	13	13'-0"	13	13'-0"	12	12'-0"	6	4½"	16'-0"	10'-2"	35'-6"	8	4½"	16'-0"	--	---	-----	-----	5	4½"	18'-3"	60	52
14	16	27¾"	27¾"	16½"	13	13'-0"	13	13'-0"	14	14'-0"	5	4½"	16'-5"	11'-0"	37'-9"	8	4½"	16'-5"	4	4½"	6'-5"	12'-6"	8	9"	20'-3"	60	60

			QUAN./LF		HEADWALLS							
SPAN	HGHT				G	HW1						
(FT.)	(FT.)	REINFORCING STEEL (LBS/LONG. JT)	CONCRETE CLASS A4 (CY/LF)	REINFORCING STEEL (LBS/LF)	HEADWALL LENGTH	SIZE	LENGTH	INLET CONCRETE CL.A4 (CY)	INLET REINFORCING STEEL (LBS)	OUTLET CONCRETE CL. A4 (CY)	OUTLET REINFORCING STEEL (LBS)	WINGWALL
12	14	61.776	3.219	584.665	14'-10"	6	14'-6"	2.351	87.116	2.382	87.116	Z
12	16	64.600	3.751	686.358	14'-10"	6	14'-6"	2.314	87.116	2.344	87.116	DD
14	8	59.984	3.110	410.138	16'-10"	6	16'-6"	2.063	99.132	2.103	99.132	O
14	10	62.808	3.172	462.500	16'-10"	6	16'-6"	2.281	99.132	2.321	99.132	S
14	12	65.632	3.577	560.733	16'-10"	6	16'-6"	2.315	99.132	2.354	99.132	W
14	14	68.456	3.997	682.253	16'-10"	6	16'-6"	2.333	99.132	2.371	99.132	AA
14	16	71.280	4.483	747.896	16'-10"	6	16'-6"	2.281	99.132	2.318	99.132	EE

A COPY OF THE ORIGINAL SEALED AND SIGNED DRAWING IS ON FILE IN THE CENTRAL OFFICE

VDOT
ROAD AND BRIDGE STANDARDS

SHEET 1 OF 1
1001.08

REVISION DATE
07/11

OVERSIZE BOX CULVERTS

30 TO 40 FT. FILLS

VIRGINIA DEPARTMENT OF TRANSPORTATION

SPECIFICATION REFERENCE

FOR TYPICAL SECTION, NOTES AND OTHER DETAILS, REFER TO STANDARD BCB-DT.

BCB-50

DIMENSIONS											REINFORCING STEEL																
SPAN	HGHT	T1	T2	T3							BH1					BH2			BH3				BV1				
(FT.)	(FT.)	TOP SLAB (IN.)	BOTTOM SLAB (IN.)	WALL (IN.)	A	B	C	D	E	F	SIZE	SPACING c-c	a	b	LENGTH	SIZE	SPACING c-c	LENGTH	SIZE	SPACING c-c	a	LENGTH	SIZE	SPACING c-c	LENGTH	NO. BL1 #4 BARS	NO. BL2 #3 BARS
12	14	27½"	27½"	15½"	11	11'-0"	11	11'-0"	12	12'-0"	5	5"	14'-3"	10'-0"	33'-7"	8	5"	14'-3"	4	5"	6'-0"	11'-8"	8	10"	18'-3"	52	52
12	16	27¾"	27¾"	18½"	11	11'-0"	11	11'-0"	14	14'-0"	6	4½"	14'-9"	11'-2"	36'-3"	9	4½"	14'-9"	3	4½"	6'-5"	12'-6"	8	9"	20'-3"	52	60
14	8	31½"	31½"	11¾"	13	13'-0"	13	13'-0"	6	6'-0"	4	4½"	15'-7½"	7'-2"	29'-5"	9	4½"	15'-7"	--	---	-----	-----	4	9"	12'-11"	60	28
14	10	31½"	31½"	10¾"	13	13'-0"	13	13'-0"	8	8'-0"	4	4½"	15'-5½"	8'-2"	31'-3"	9	4½"	15'-5"	--	---	-----	-----	5	4½"	14'-11"	60	36
14	12	31¼"	31¼"	11½"	13	13'-0"	13	13'-0"	10	10'-0"	4	4½"	15'-7"	9'-2"	33'-4"	9	4½"	15'-6"	4	4½"	5'-11"	11'-5"	7	8"	16'-10"	60	44
14	14	31¼"	31¼"	15"	13	13'-0"	13	13'-0"	12	12'-0"	5	4½"	16'-2"	10'-4"	36'-1"	9	4½"	16'-2"	3	4½"	6'-3"	12'-4"	7	7"	18'-10"	60	52
14	16	31¼"	31¼"	17½"	13	13'-0"	13	13'-0"	14	14'-0"	6	4½"	16'-7"	11'-6"	38'-8"	9	4½"	16'-7"	4	4½"	6'-8"	13'-1"	6	4½"	20'-10"	60	60

			QUAN./LF		HEADWALLS							
SPAN	HGHT				G	HW1						
(FT.)	(FT.)	REINFORCING STEEL (LBS/LONG. JT)	CONCRETE CLASS A4 (CY/LF)	REINFORCING STEEL (LBS/LF)	HEADWALL LENGTH	SIZE	LENGTH	INLET CONCRETE CL.A4 (CY)	INLET REINFORCING STEEL (LBS)	OUTLET CONCRETE CL. A4 (CY)	OUTLET REINFORCING STEEL (LBS)	WINGWALL
12	14	61.776	3.810	603.234	14'-10"	6	14'-6"	2.080	87.116	2.110	87.116	AA
12	16	64.600	4.390	817.047	14'-10"	6	14'-6"	1.979	87.116	2.008	87.116	EE
14	8	59.984	3.689	470.179	16'-10"	6	16'-6"	1.732	99.132	1.770	99.132	O
14	10	62.808	3.735	536.664	16'-10"	6	16'-6"	1.965	99.132	2.003	99.132	S
14	12	65.632	3.914	651.161	16'-10"	6	16'-6"	2.071	99.132	2.109	99.132	W
14	14	68.456	4.464	743.491	16'-10"	6	16'-6"	2.010	99.132	2.047	99.132	AA
14	16	71.280	4.961	941.671	16'-10"	6	16'-6"	1.939	99.132	1.974	99.132	EE

A COPY OF THE ORIGINAL SEALED AND SIGNED DRAWING IS ON FILE IN THE CENTRAL OFFICE

SPECIFICATION REFERENCE

OVERSIZE BOX CULVERTS

40 TO 50 FT. FILLS

VIRGINIA DEPARTMENT OF TRANSPORTATION

VDOT

ROAD AND BRIDGE STANDARDS

REVISION DATE 07/11

SHEET 1 OF 1

1001.09

BCS-DT

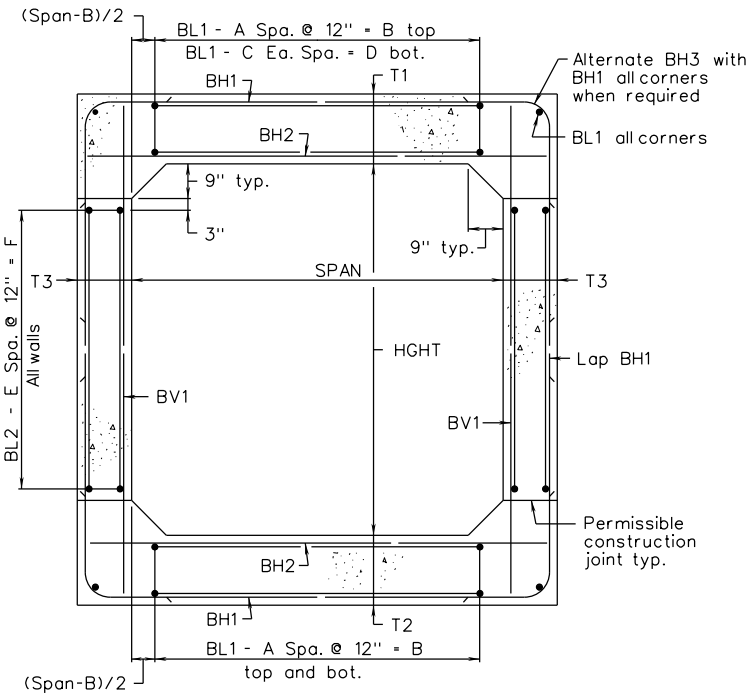

TYPICAL SECTION

GENERAL NOTES:

Capacity: AASHTO HL-93 Loading

Specifications:

Construction: Virginia Department of Transportation Road and Bridge Specifications.

Design: AASHTO LRFD Bridge Design Specifications, 5th Edition 2010; 2011 Interim Specifications; and VDOT Modifications.

All concrete shall be Class A4.

Deformed reinforcing bars shall conform to ASTM A615, Grade 60. All reinforcing bar dimensions on the detailed drawings are to centers of bars except where otherwise noted and are subject to fabrication and construction tolerances.

Construction joints shall be constructed and bonded in accordance with the current VDOT Road and Bridge Specifications.

Barrels more than 35' in length shall be poured in sections by providing vertical construction joints, not exceeding 25' between joints nor more than 30' from ends of barrels.

** Bars BH1 and BH3 shall have a pin diameter of 24 bar diameters.

Dimensions on bar diagrams are out-to-out of bars. Bars are straight unless otherwise shown.

The number of BL1 and BL2 bars shown in the table is the number of longitudinal bars shown in the typical section and may not equal the total number of bars required. BL1 and BL2 bars shall have a lap of 30 bar diameters at splices. At construction joints, first placed bars shall project 30 bar diameters beyond the joint. Estimated QUAN./LF shown for reinforcing steel does not include the quantity for laps of BL1 and BL2 bars. The additional weight per longitudinal lap is shown in the table.

The minimum cover of main reinforcing bars shall be 2½" from the face of the concrete for culverts under 0 to 2 foot fills and shall be 2" from the face of the concrete for all other culverts.

All reinforcing steel for culverts under 0 to 2 foot fills shall be low carbon/chromium reinforcing steel conforming to ASTM A1035.

At the Contractor's option, BV1 bars may be spliced at the permissible construction joint in order to facilitate construction. No additional compensation shall be provided for the increase in reinforcing steel quantity due to the splices.

Headwall quantities shown assume wingwalls are to be built at a 45° angle to the headwall.

The designs are applicable to the fill height and other conditions indicated. Any change in the conditions invalidates these designs.

Wingwalls referenced by letter apply when the acceptable foundation level is the same for both box and wings. If foundation levels are different, the height of the wingwall shall be adjusted by selection of another lettered wingwall of the appropriate height. For wingwall details, refer to standard series BCW for the appropriate fill slope.

For details of extending existing boxes, refer to standard BCE-01.

For modification of details for skewed culverts, see the skewed box details included in the road plans.

This standard shall be used with the BCS standard series.

A COPY OF THE ORIGINAL SEALED AND SIGNED DRAWING IS ON FILE IN THE CENTRAL OFFICE.

VDOT ROAD AND BRIDGE STANDARDS	SINGLE BOX CULVERTS STANDARD DETAILS VIRGINIA DEPARTMENT OF TRANSPORTATION	SPECIFICATION REFERENCE
SHEET 1 OF 2 / REVISION DATE		
1002.01 / 07/12		

BCS-DT

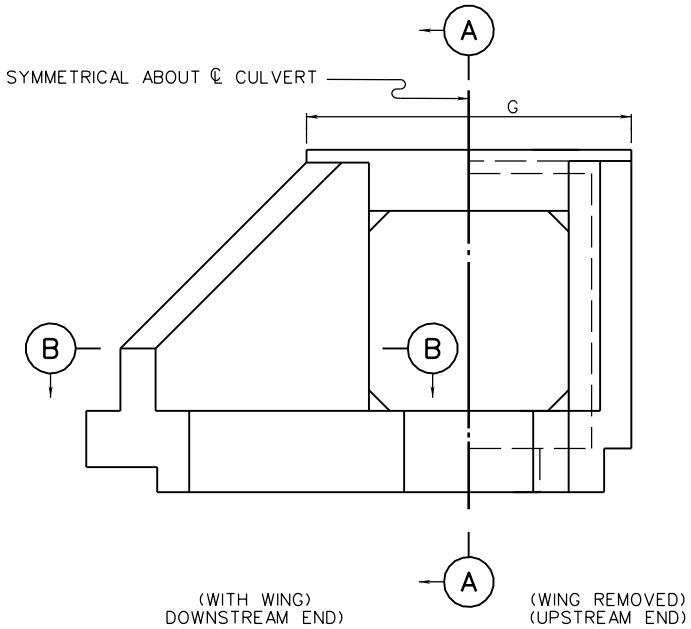

END ELEVATION

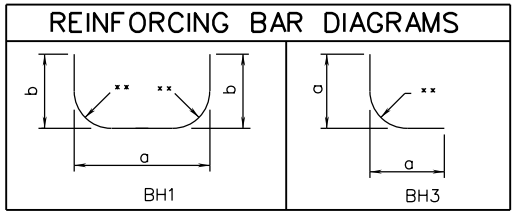

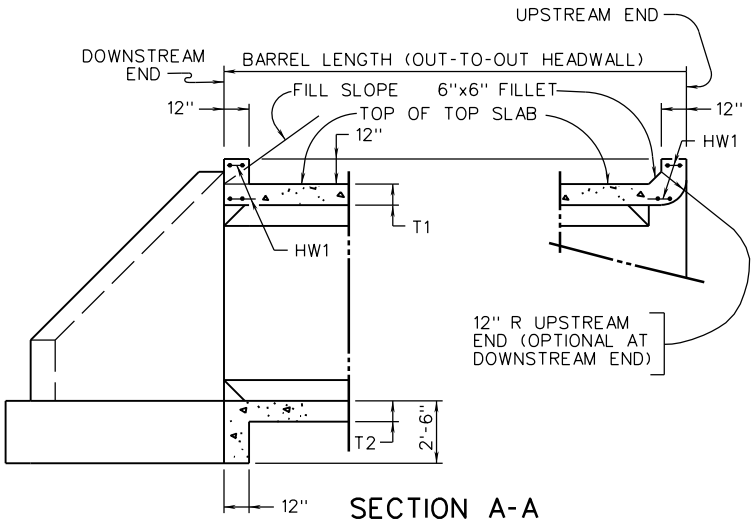

SECTION A-A
(WITH WING)

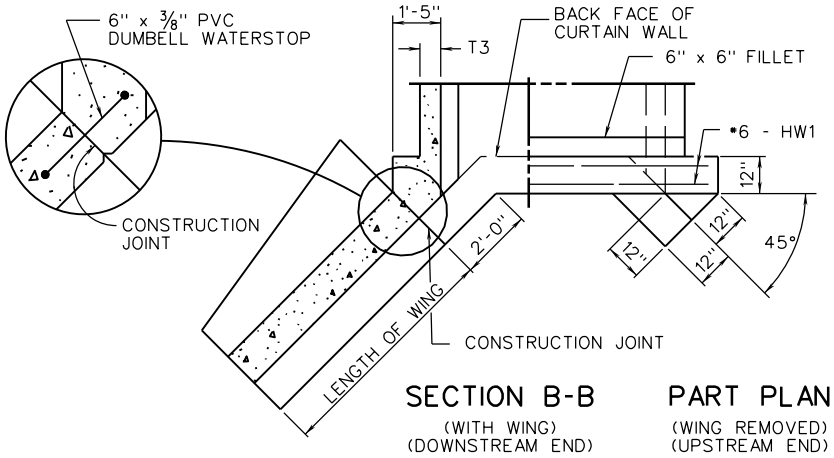

SECTION B-B
(WITH WING)
(DOWNSTREAM END)

PART PLAN
(WING REMOVED)
(UPSTREAM END)

SPECIFICATION REFERENCE	SINGLE BOX CULVERTS STANDARD DETAILS VIRGINIA DEPARTMENT OF TRANSPORTATION	VDOT ROAD AND BRIDGE STANDARDS	
		REVISION DATE 07/11	SHEET 2 OF 2 1002.02

BCS-02

FOR TYPICAL SECTION. NOTES AND OTHER DETAILS, REFER TO STANDARD BCS-DT.

DIMENSIONS					REINFORCING STEEL																						
SPAN	HGHT	T1	T2	T3							BH1					BH2			BH3				BV1				
(FT.)	(FT.)	TOP SLAB (IN.)	BOTTOM SLAB (IN.)	WALL (IN.)	A	B	C	D	E	F	SIZE	SPACING C-C	a	b	LENGTH	SIZE	SPACING C-C	LENGTH	SIZE	SPACING C-C	a	LENGTH	SIZE	SPACING C-C	LENGTH	NO. BL1 #4 BARS	NO. BL2 #3 BARS
3	3	8½"	8½"	8"	2	2'- 0"	4	2'- 0"	1	1'- 0"	4	12"	4'- 0"	2'- 8½"	8'-11"	5	12"	4'- 0"	4	12"	2'- 6"	4'- 9"	4	12"	4'- 1"	18	8
3	4	8½"	8½"	8"	2	2'- 0"	4	2'- 0"	2	2'- 0"	4	12"	4'- 0"	3'- 2½"	9'-11"	6	12"	4'- 0"	--	---	-----	-----	4	12"	5'- 1"	18	12
4	3	9"	9"	8"	3	3'- 0"	6	3'- 0"	1	1'- 0"	4	12"	5'- 0"	2'- 9"	10'- 0"	6	12"	5'- 0"	--	---	-----	-----	4	10½"	4'- 2"	23	8
4	4	9"	9"	8"	3	3'- 0"	6	3'- 0"	2	2'- 0"	4	12"	5'- 0"	3'- 3"	11'- 0"	6	12"	5'- 0"	--	---	-----	-----	4	12"	5'- 2"	23	12
4	5	9"	9"	8"	3	3'- 0"	6	3'- 0"	3	3'- 0"	4	12"	5'- 0"	3'- 9"	12'- 0"	6	12"	5'- 0"	--	---	-----	-----	4	12"	6'- 2"	23	16
4	6	9"	9"	8"	3	3'- 0"	6	3'- 0"	4	4'- 0"	4	11"	5'- 0"	4'- 3"	13'- 0"	6	11"	5'- 0"	--	---	-----	-----	4	12"	7'- 2"	23	20
5	3	9¼"	9¼"	8"	4	4'- 0"	8	4'- 0"	1	1'- 0"	4	11"	6'- 0"	2'- 9¼"	11'- 0"	6	11"	6'- 0"	--	---	-----	-----	4	12"	4'- 2"	28	8
5	4	9¼"	9¼"	8"	4	4'- 0"	8	4'- 0"	2	2'- 0"	4	11"	6'- 0"	3'- 3¼"	12'- 0"	6	11"	6'- 0"	--	---	-----	-----	4	12"	5'- 2"	28	12
5	5	9¼"	9¼"	8"	4	4'- 0"	8	4'- 0"	3	3'- 0"	4	10"	6'- 0"	3'- 9¼"	13'- 0"	6	10"	6'- 0"	--	---	-----	-----	4	12"	6'- 2"	28	16
5	6	9"	9"	8"	4	4'- 0"	8	4'- 0"	4	4'- 0"	4	10"	6'- 0"	4'- 3"	14'- 0"	6	10"	6'- 0"	--	---	-----	-----	4	12"	7'- 2"	28	20
5	7	9"	9"	8"	4	4'- 0"	8	4'- 0"	5	5'- 0"	4	9"	6'- 0"	4'- 9"	15'- 0"	6	9"	6'- 0"	--	---	-----	-----	4	12"	8'- 2"	28	24
6	4	9¼"	9¼"	8"	5	5'- 0"	10	5'- 0"	2	2'- 0"	4	9"	7'- 0"	3'- 3¼"	13'- 0"	6	9"	7'- 0"	--	---	-----	-----	4	12"	5'- 2"	33	12
6	5	9¼"	9¼"	8"	5	5'- 0"	10	5'- 0"	3	3'- 0"	4	9"	7'- 0"	3'- 9¼"	14'- 0"	6	9"	7'- 0"	--	---	-----	-----	4	12"	6'- 2"	33	16
6	6	9¼"	9¼"	8"	5	5'- 0"	10	5'- 0"	4	4'- 0"	4	9"	7'- 0"	4'- 3¼"	15'- 0"	6	9"	7'- 0"	--	---	-----	-----	4	12"	7'- 2"	33	20
6	7	9¼"	9¼"	8"	5	5'- 0"	10	5'- 0"	5	5'- 0"	4	8"	7'- 0"	4'- 9¼"	16'- 0"	6	8"	7'- 0"	--	---	-----	-----	4	12"	8'- 2"	33	24
6	8	9¼"	9¼"	8"	5	5'- 0"	10	5'- 0"	6	6'- 0"	4	12"	7'- 0"	5'- 3¼"	17'- 0"	8	12"	7'- 0"	4	12"	3'- 3"	6'- 4"	4	12"	9'- 2"	33	28
7	4	9½"	9½"	8"	6	6'- 0"	12	6'- 0"	2	2'- 0"	4	9"	8'- 0"	3'- 3½"	14'- 1"	6	9"	8'- 0"	--	---	-----	-----	4	12"	5'- 3"	38	12
7	6	9½"	9½"	8"	6	6'- 0"	12	6'- 0"	4	4'- 0"	4	8"	8'- 0"	4'- 3½"	16'- 1"	6	8"	8'- 0"	--	---	-----	-----	4	12"	7'- 3"	38	20
7	8	9½"	9½"	8"	6	6'- 0"	12	6'- 0"	6	6'- 0"	4	7"	8'- 0"	5'- 3½"	18'- 1"	6	7"	8'- 0"	--	---	-----	-----	4	12"	9'- 3"	38	28
7	10	9½"	9½"	8"	6	6'- 0"	12	6'- 0"	8	8'- 0"	4	6"	8'- 0"	6'- 3½"	20'- 1"	6	6"	8'- 0"	--	---	-----	-----	4	12"	11'- 3"	38	36
8	4	9¾"	9¾"	8"	7	7'- 0"	14	7'- 0"	2	2'- 0"	4	8"	9'- 0"	3'- 3¾"	15'- 1"	6	8"	9'- 0"	--	---	-----	-----	4	12"	5'- 3"	43	12
8	6	9¾"	9¾"	8"	7	7'- 0"	14	7'- 0"	4	4'- 0"	5	12"	9'- 0"	4'- 3¾"	17'- 0"	8	12"	9'- 0"	3	12"	3'- 6"	6'-10"	4	12"	7'- 3"	43	20
8	8	9¾"	9¾"	8"	7	7'- 0"	14	7'- 0"	6	6'- 0"	5	7"	9'- 0"	5'- 3¾"	19'- 0"	6	7"	9'- 0"	--	---	-----	-----	5	12"	9'- 3"	43	28
8	10	9½"	9½"	8"	7	7'- 0"	14	7'- 0"	8	8'- 0"	4	9"	9'- 0"	6'- 3½"	21'- 1"	8	9"	9'- 0"	4	9"	3'- 7"	6'-11"	4	12"	11'- 3"	43	36
9	4	9¾"	9¾"	8"	8	8'- 0"	16	8'- 0"	2	2'- 0"	6	12"	10'- 0"	3'- 7¼"	16'- 4"	8	12"	10'- 0"	5	12"	3'- 11"	7'- 5"	4	12"	5'- 3"	48	12
9	6	9¾"	9¾"	8"	8	8'- 0"	16	8'- 0"	4	4'- 0"	5	7"	10'- 0"	4'- 3¾"	18'- 0"	6	7"	10'- 0"	--	---	-----	-----	4	12"	7'- 3"	48	20
9	8	9¾"	9¾"	8"	8	8'- 0"	16	8'- 0"	6	6'- 0"	4	6"	10'- 0"	5'- 3¾"	20'- 1"	6	6"	10'- 0"	--	---	-----	-----	4	12"	9'- 3"	48	28
9	10	9¾"	9¾"	8"	8	8'- 0"	16	8'- 0"	8	8'- 0"	5	10½"	10'- 0"	6'- 3¾"	22'- 0"	8	10½"	10'- 0"	3	10½"	3'- 8"	7'- 3"	4	12"	11'- 3"	48	36
9	12	9¾"	9¾"	8"	8	8'- 0"	16	8'- 0"	10	10'- 0"	5	8"	10'- 0"	7'- 3¾"	24'- 0"	8	8"	10'- 0"	4	8"	4'- 1"	7'-11"	5	11½"	13'- 3"	48	44
10	4	10"	10"	8"	9	9'- 0"	18	9'- 0"	2	2'- 0"	4	7"	11'- 0"	3'- 6"	17'- 6"	6	7"	11'- 0"	4	7"	3'-10"	7'- 5"	4	12"	5'- 4"	53	12
10	6	10"	10"	8"	9	9'- 0"	18	9'- 0"	4	4'- 0"	5	10"	11'- 0"	4'- 9"	19'-10"	7	10"	11'- 0"	--	---	-----	-----	4	12"	7'- 4"	53	20
10	8	10"	10"	8"	9	9'- 0"	18	9'- 0"	6	6'- 0"	5	10"	11'- 0"	5'- 9"	21'-10"	8	10"	11'- 0"	3	10"	3'-10"	7'- 5"	4	12"	9'- 4"	53	28
10	10	10"	10"	8"	9	9'- 0"	18	9'- 0"	8	8'- 0"	4	8"	11'- 0"	6'- 6"	23'- 6"	7	8"	11'- 0"	4	8"	3'-10"	7'- 5"	4	12"	11'- 4"	53	36
10	12	10"	10"	8"	9	9'- 0"	18	9'- 0"	10	10'- 0"	4	7"	11'- 0"	7'- 6"	25'- 6"	8	7"	11'- 0"	4	7"	4'- 1"	7'-11"	5	12"	13'- 4"	53	44
12	6	10¼"	10¼"	8"	11	11'- 0"	22	11'- 0"	4	4'- 0"	6	9"	13'- 0"	5'- 0"	22'- 3"	8	9"	13'- 0"	4	9"	4'- 3"	8'- 5"	4	12"	7'- 5"	63	20
12	8	10"	10"	8"	11	11'- 0"	22	11'- 0"	6	6'- 0"	5	8"	13'- 0"	5'- 9"	23'-10"	8	8"	13'- 0"	3	8"	4'- 3"	8'- 5"	4	12"	9'- 4"	63	28
12	10	10"	10"	8"	11	11'- 0"	22	11'- 0"	8	8'- 0"	5	7"	13'- 0"	6'- 9"	25'-10"	7	7"	13'- 0"	--	---	-----	-----	4	12"	11'- 4"	63	36
12	12	10¼"	10¼"	8"	11	11'- 0"	22	11'- 0"	10	10'- 0"	5	8"	13'- 0"	7'- 9"	27'-11"	8	8"	13'- 0"	4	8"	4'- 3"	8'- 5"	5	12"	13'- 5"	63	44

A COPY OF THE ORIGINAL SEALED AND SIGNED DRAWING IS ON FILE IN THE CENTRAL OFFICE.

VDOT
ROAD AND BRIDGE STANDARDS

SHEET 1 OF 2 | REVISION DATE
1002.03 | 07/11

SINGLE BOX CULVERTS

0 TO 2 FT. FILLS

VIRGINIA DEPARTMENT OF TRANSPORTATION

SPECIFICATION REFERENCE

FOR TYPICAL SECTION, NOTES AND OTHER DETAILS, REFER TO STANDARD BCS-DT.

SPAN (FT.)	HGHT (FT.)	REINFORCING STEEL (LBS/LONG. JT)	QUAN./LF CONCRETE CLASS A4 (CY/LF)	QUAN./LF REINFORCING STEEL (LBS/LF)	HEADWALLS G HEADWALL LENGTH	HEADWALLS HW1 SIZE	HEADWALLS HW1 LENGTH	INLET CONCRETE CL. A4 (CY)	INLET REINFORCING STEEL (LBS)	OUTLET CONCRETE CL. A4 (CY)	OUTLET REINFORCING STEEL (LBS)	WINGWALL
3	3	17.854	0.413	54.850	5'-10"	6	5'- 6"	1.041	33.044	1.045	33.044	A
3	4	19.266	0.463	48.592	5'-10"	6	5'- 6"	1.134	33.044	1.137	33.044	C
4	3	22.029	0.482	53.114	6'-10"	6	6'- 6"	1.142	39.052	1.149	39.052	A
4	4	23.441	0.531	56.495	6'-10"	6	6'- 6"	1.235	39.052	1.242	39.052	C
4	5	24.853	0.580	60.671	6'-10"	6	6'- 6"	1.328	39.052	1.335	39.052	E
4	6	26.265	0.629	67.791	6'-10"	6	6'- 6"	1.420	39.052	1.427	39.052	G
5	3	26.204	0.547	62.973	7'-10"	6	7'- 6"	1.259	45.060	1.269	45.060	B
5	4	27.616	0.596	67.271	7'-10"	6	7'- 6"	1.351	45.060	1.362	45.060	D
5	5	29.028	0.645	75.429	7'-10"	6	7'- 6"	1.444	45.060	1.455	45.060	F
5	6	30.440	0.684	79.872	7'-10"	6	7'- 6"	1.518	45.060	1.529	45.060	G
5	7	31.852	0.732	89.391	7'-10"	6	7'- 6"	1.611	45.060	1.621	45.060	I
6	4	31.791	0.652	84.653	8'-10"	6	8'- 6"	1.449	51.068	1.463	51.068	D
6	5	33.203	0.701	89.275	8'-10"	6	8'- 6"	1.542	51.068	1.555	51.068	F
6	6	34.615	0.750	93.896	8'-10"	6	8'- 6"	1.634	51.068	1.648	51.068	H
6	7	36.027	0.798	105.585	8'-10"	6	8'- 6"	1.727	51.068	1.741	51.068	J
6	8	37.439	0.846	124.695	8'-10"	6	8'- 6"	1.820	51.068	1.833	51.068	L
7	4	35.966	0.721	94.040	9'-10"	6	9'- 6"	1.545	57.076	1.562	57.076	D
7	6	38.790	0.818	110.869	9'-10"	6	9'- 6"	1.730	57.076	1.747	57.076	H
7	8	41.614	0.916	130.884	9'-10"	6	9'- 6"	1.915	57.076	1.933	57.076	L
7	10	44.438	1.012	155.677	9'-10"	6	9'- 6"	2.101	57.076	2.118	57.076	P
8	4	40.141	0.793	111.031	10'-10"	6	10'- 6"	1.639	63.084	1.659	63.084	D
8	6	42.965	0.889	142.409	10'-10"	6	10'- 6"	1.824	63.084	1.845	63.084	H
8	8	45.789	0.985	175.199	10'-10"	6	10'- 6"	2.010	63.084	2.030	63.084	L
8	10	48.613	1.069	188.158	10'-10"	6	10'- 6"	2.197	63.084	2.218	63.084	P
9	4	44.316	0.848	179.518	11'-10"	6	11'- 6"	1.735	69.092	1.758	69.092	D
9	6	47.140	0.948	159.791	11'-10"	6	11'- 6"	1.920	69.092	1.944	69.092	H
9	8	49.964	1.046	168.693	11'-10"	6	11'- 6"	2.105	69.092	2.129	69.092	L
9	10	52.788	1.143	189.675	11'-10"	6	11'- 6"	2.291	69.092	2.315	69.092	P
9	12	55.612	1.236	269.973	11'-10"	6	11'- 6"	2.476	69.092	2.500	69.092	T
10	4	48.491	0.925	180.133	12'-10"	6	12'- 6"	1.826	75.100	1.853	75.100	D
10	6	51.315	1.026	158.894	12'-10"	6	12'- 6"	2.012	75.100	2.039	75.100	H
10	8	54.139	1.121	200.152	12'-10"	6	12'- 6"	2.197	75.100	2.224	75.100	L
10	10	56.963	1.219	212.453	12'-10"	6	12'- 6"	2.383	75.100	2.410	75.100	P
10	12	59.787	1.313	279.378	12'-10"	6	12'- 6"	2.568	75.100	2.595	75.100	T
12	6	59.665	1.161	275.345	14'-10"	6	14'- 6"	2.197	87.116	2.230	87.116	H
12	8	62.489	1.239	268.938	14'-10"	6	14'- 6"	2.387	87.116	2.421	87.116	L
12	10	65.313	1.339	258.134	14'-10"	6	14'- 6"	2.573	87.116	2.606	87.116	P
12	12	68.137	1.454	318.809	14'-10"	6	14'- 6"	2.753	87.116	2.786	87.116	T

A COPY OF THE ORIGINAL SEALED AND SIGNED DRAWING IS ON FILE IN THE CENTRAL OFFICE.

SPECIFICATION REFERENCE

SINGLE BOX CULVERTS

0 TO 2 FT. FILLS

VIRGINIA DEPARTMENT OF TRANSPORTATION

VDOT

ROAD AND BRIDGE STANDARDS

REVISION DATE 07/11

SHEET 2 OF 2

1002.04

BCS-05

FOR TYPICAL SECTION, NOTES AND OTHER DETAILS, REFER TO STANDARD BCS-DT.

DIMENSIONS					REINFORCING STEEL																						
SPAN	HGHT	T1	T2	T3							BH1					BH2			BH3				BV1				
(FT.)	(FT.)	TOP SLAB (IN.)	BOTTOM SLAB (IN.)	WALL (IN.)	A	B	C	D	E	F	SIZE	SPACING C-C	a	b	LENGTH	SIZE	SPACING C-C	LENGTH	SIZE	SPACING C-C	a	LENGTH	SIZE	SPACING C-C	LENGTH	NO. BL1 #4 BARS	NO. BL2 #3 BARS
3	3	8"	8"	8"	2	2'- 0"	2	2'- 0"	1	1'- 0"	4	12"	4'- 0"	2'- 8"	8'-10"	4	12"	4'- 0"	--	---	-----	-----	4	12"	4'- 0"	16	8
3	4	8"	8"	8"	2	2'- 0"	2	2'- 0"	2	2'- 0"	4	12"	4'- 0"	3'- 2"	9'-10"	4	12"	4'- 0"	--	---	-----	-----	4	12"	5'- 0"	16	12
4	3	8"	8"	8"	3	3'- 0"	3	3'- 0"	1	1'- 0"	4	12"	5'- 0"	2'- 8"	9'-10"	5	12"	5'- 0"	--	---	-----	-----	4	12"	4'- 0"	20	8
4	4	8"	8"	8"	3	3'- 0"	3	3'- 0"	2	2'- 0"	4	12"	5'- 0"	3'- 2"	10'-10"	5	12"	5'- 0"	--	---	-----	-----	4	12"	5'- 0"	20	12
4	5	8"	8"	8"	3	3'- 0"	3	3'- 0"	3	3'- 0"	4	12"	5'- 0"	3'- 8"	11'-10"	5	12"	5'- 0"	--	---	-----	-----	4	12"	6'- 0"	20	16
4	6	8"	8"	8"	3	3'- 0"	3	3'- 0"	4	4'- 0"	4	12"	5'- 0"	4'- 2"	12'-10"	5	12"	5'- 0"	--	---	-----	-----	4	12"	7'- 0"	20	20
5	3	8"	8"	8"	4	4'- 0"	4	4'- 0"	1	1'- 0"	4	12"	6'- 0"	2'- 8"	10'-10"	5	12"	6'- 0"	4	12"	2'- 6"	4'- 9"	4	12"	4'- 0"	24	8
5	4	8"	8"	8"	4	4'- 0"	4	4'- 0"	2	2'- 0"	4	12"	6'- 0"	3'- 2"	11'-10"	5	12"	6'- 0"	--	---	-----	-----	4	12"	5'- 0"	24	12
5	5	8"	8"	8"	4	4'- 0"	4	4'- 0"	3	3'- 0"	4	12"	6'- 0"	3'- 8"	12'-10"	5	12"	6'- 0"	--	---	-----	-----	4	12"	6'- 0"	24	16
5	6	8"	8"	8"	4	4'- 0"	4	4'- 0"	4	4'- 0"	4	12"	6'- 0"	4'- 2"	13'-10"	6	12"	6'- 0"	--	---	-----	-----	4	12"	7'- 0"	24	20
5	7	8"	8"	8"	4	4'- 0"	4	4'- 0"	5	5'- 0"	4	12"	6'- 0"	4'- 8"	14'-10"	6	12"	6'- 0"	--	---	-----	-----	4	12"	8'- 0"	24	24
6	4	8"	8"	8"	5	5'- 0"	5	5'- 0"	2	2'- 0"	5	12"	7'- 0"	3'- 2"	12'- 8"	6	12"	7'- 0"	--	---	-----	-----	4	12"	5'- 0"	28	12
6	5	8"	8"	8"	5	5'- 0"	5	5'- 0"	3	3'- 0"	4	12"	7'- 0"	3'- 8"	13'-10"	6	12"	7'- 0"	4	12"	2'- 8 3/8"	5'- 2"	4	12"	6'- 0"	28	16
6	6	8"	8"	8"	5	5'- 0"	5	5'- 0"	4	4'- 0"	4	12"	7'- 0"	4'- 2"	14'-10"	6	12"	7'- 0"	4	12"	2'- 8 3/8"	5'- 2"	4	12"	7'- 0"	28	20
6	7	8"	8"	8"	5	5'- 0"	5	5'- 0"	5	5'- 0"	4	10"	7'- 0"	4'- 8"	15'-10"	6	10"	7'- 0"	4	10"	2'-11"	5'- 8"	4	12"	8'- 0"	28	24
6	8	8"	8"	8"	5	5'- 0"	5	5'- 0"	6	6'- 0"	4	9"	7'- 0"	5'- 2"	16'-10"	6	9"	7'- 0"	4	9"	3'- 2"	6'- 2"	4	12"	9'- 0"	28	28
7	4	8"	8"	8"	6	6'- 0"	6	6'- 0"	2	2'- 0"	5	11"	8'- 0"	3'- 2"	13'- 8"	6	11"	8'- 0"	--	---	-----	-----	4	12"	5'- 0"	32	12
7	6	8"	8"	8"	6	6'- 0"	6	6'- 0"	4	4'- 0"	4	9"	8'- 0"	4'- 2"	15'-10"	6	9"	8'- 0"	4	9"	2'-10 3/4"	5'- 6"	4	12"	7'- 0"	32	20
7	8	8"	8"	8"	6	6'- 0"	6	6'- 0"	6	6'- 0"	4	8"	8'- 0"	5'- 2"	17'-10"	6	8"	8'- 0"	3	8"	3'- 2"	6'- 2"	4	12"	9'- 0"	32	28
7	10	8"	8"	8"	6	6'- 0"	6	6'- 0"	8	8'- 0"	5	6"	8'- 0"	6'- 2"	19'- 8"	6	6"	8'- 0"	--	---	-----	-----	5	12"	11'- 0"	32	36
8	4	8"	8"	8"	7	7'- 0"	7	7'- 0"	2	2'- 0"	5	9"	9'- 0"	3'- 2"	14'- 8"	6	9"	9'- 0"	3	9"	3'- 2"	6'- 2"	4	11 1/2"	5'- 0"	36	12
8	6	8"	8"	8"	7	7'- 0"	7	7'- 0"	4	4'- 0"	4	8"	9'- 0"	4'- 2"	16'-10"	6	8"	9'- 0"	4	8"	3'- 2"	6'- 2"	4	12"	7'- 0"	36	20
8	8	8"	8"	8"	7	7'- 0"	7	7'- 0"	6	6'- 0"	5	7"	9'- 0"	5'- 2"	18'- 8"	6	7"	9'- 0"	--	---	-----	-----	4	12"	9'- 0"	36	28
8	10	8"	8"	8"	7	7'- 0"	7	7'- 0"	8	8'- 0"	5	11"	9'- 0"	6'- 2"	20'- 8"	8	11"	9'- 0"	4	11"	3'- 6"	6'- 9"	5	12"	11'- 0"	36	36
9	4	8"	8"	8"	8	8'- 0"	8	8'- 0"	2	2'- 0"	5	8"	10'- 0"	3'- 2"	15'- 8"	6	8"	10'- 0"	3	8"	3'- 3 5/8"	6'- 5"	4	8"	5'- 0"	40	12
9	6	8"	8"	8"	8	8'- 0"	8	8'- 0"	4	4'- 0"	4	7"	10'- 0"	4'- 2"	17'-10"	6	7"	10'- 0"	4	7"	3'- 3 5/8"	6'- 4"	4	11"	7'- 0"	40	20
9	8	8 1/4"	8 1/4"	8"	8	8'- 0"	8	8'- 0"	6	6'- 0"	5	10 1/2"	10'- 0"	5'- 2 1/4"	19'- 9"	8	10 1/2"	10'- 0"	3	10 1/2"	3'- 3 5/8"	6'- 5"	4	12"	9'- 0"	40	28
9	10	8"	8"	8"	8	8'- 0"	8	8'- 0"	8	8'- 0"	5	10"	10'- 0"	6'- 2"	21'- 8"	8	10"	10'- 0"	4	10"	3'- 6"	6'- 9"	5	12"	11'- 0"	40	36
9	12	8 1/4"	8 1/4"	8"	8	8'- 0"	8	8'- 0"	10	10'- 0"	5	9 1/2"	10'- 0"	7'- 2 1/4"	23'- 9"	8	9 1/2"	10'- 0"	3	9 1/2"	3'-11"	7'- 9"	6	11 1/2"	13'- 0"	40	44
10	4	8 3/4"	8 3/4"	8"	9	9'- 0"	9	9'- 0"	2	2'- 0"	6	7"	11'- 0"	3'- 2 3/4"	16'- 8"	6	7"	11'- 0"	--	---	-----	-----	5	9 1/2"	5'- 2"	44	12
10	6	8 3/4"	8 3/4"	8"	9	9'- 0"	9	9'- 0"	4	4'- 0"	6	10"	11'- 0"	4'- 2 3/4"	18'- 8"	8	10"	11'- 0"	--	---	-----	-----	4	9"	7'- 2"	44	20
10	8	8 3/4"	8 3/4"	8"	9	9'- 0"	9	9'- 0"	6	6'- 0"	6	6"	11'- 0"	5'- 2 3/4"	20'- 8"	6	6"	11'- 0"	--	---	-----	-----	4	10"	9'- 2"	44	28
10	10	8 3/4"	8 3/4"	8"	9	9'- 0"	9	9'- 0"	8	8'- 0"	6	9 1/2"	11'- 0"	6'- 2 3/4"	22'- 8"	8	9 1/2"	11'- 0"	3	9 1/2"	3'- 6"	6'-10"	4	9"	11'- 2"	44	36
10	12	9 1/4"	9 1/4"	8"	9	9'- 0"	9	9'- 0"	10	10'- 0"	5	8 1/2"	11'- 0"	7'- 3 1/4"	24'-11"	8	8 1/2"	11'- 0"	4	8 1/2"	4'- 1"	7'-11"	6	12"	13'- 2"	44	44
12	6	9 1/2"	9 1/2"	8"	11	11'- 0"	11	11'- 0"	4	4'- 0"	6	8"	13'- 0"	4'- 3 1/2"	20'- 9"	7	8"	13'- 0"	4	8"	3'-10 3/4"	7'- 6"	4	6 1/2"	7'- 3"	52	20
12	8	9 3/4"	9 3/4"	8"	11	11'- 0"	11	11'- 0"	6	6'- 0"	6	8"	13'- 0"	5'- 7 1/4"	23'- 4"	8	8"	13'- 0"	3	8"	3'-10 3/4"	7'- 7"	4	8 1/2"	9'- 3"	52	28
12	10	9 3/4"	9 3/4"	8"	11	11'- 0"	11	11'- 0"	8	8'- 0"	5	8"	13'- 0"	6'- 3 3/4"	25'- 0"	8	8"	13'- 0"	4	8"	3'-10 3/4"	7'- 6"	4	12"	11'- 3"	52	36
12	12	10 1/2"	10 1/2"	8"	11	11'- 0"	11	11'- 0"	10	10'- 0"	6	7"	13'- 0"	7'- 8"	27'- 7"	8	7"	13'- 0"	--	---	-----	-----	6	12"	13'- 5"	52	44

A COPY OF THE ORIGINAL SEALED AND SIGNED DRAWING IS ON FILE IN THE CENTRAL OFFICE.

VDOT
ROAD AND BRIDGE STANDARDS

SHEET 1 OF 2 | REVISION DATE
1002.05 | 07/11

SINGLE BOX CULVERTS

2 TO 5 FT. FILLS

VIRGINIA DEPARTMENT OF TRANSPORTATION

SPECIFICATION REFERENCE

FOR TYPICAL SECTION, NOTES AND OTHER DETAILS, REFER TO STANDARD BCS-DT.

SPAN (FT.)	HGHT (FT.)	REINFORCING STEEL (LBS/LONG. JT)	QUAN./LF CONCRETE CLASS A4 (CY/LF)	QUAN./LF REINFORCING STEEL (LBS/LF)	HEADWALLS G HEADWALL LENGTH	HEADWALLS HW1 SIZE	HEADWALLS HW1 LENGTH	INLET CONCRETE CL. A4 (CY)	INLET REINFORCING STEEL (LBS)	OUTLET CONCRETE CL. A4 (CY)	OUTLET REINFORCING STEEL (LBS)	WINGWALL
3	3	16.184	0.401	36.185	5'-10"	6	5'- 6"	1.038	33.044	1.042	33.044	A
3	4	17.596	0.450	40.361	5'-10"	6	5'- 6"	1.131	33.044	1.134	33.044	C
4	3	19.524	0.450	45.279	6'-10"	6	6'- 6"	1.139	39.052	1.146	39.052	A
4	4	20.936	0.499	49.455	6'-10"	6	6'- 6"	1.232	39.052	1.239	39.052	C
4	5	22.348	0.548	53.631	6'-10"	6	6'- 6"	1.324	39.052	1.332	39.052	E
4	6	23.760	0.597	57.807	6'-10"	6	6'- 6"	1.417	39.052	1.424	39.052	G
5	3	22.864	0.498	64.065	7'-10"	6	7'- 6"	1.240	45.060	1.251	45.060	A
5	4	24.276	0.548	55.549	7'-10"	6	7'- 6"	1.333	45.060	1.343	45.060	C
5	5	25.688	0.597	59.725	7'-10"	6	7'- 6"	1.426	45.060	1.436	45.060	E
5	6	27.100	0.645	69.409	7'-10"	6	7'- 6"	1.518	45.060	1.529	45.060	G
5	7	28.512	0.695	73.585	7'-10"	6	7'- 6"	1.611	45.060	1.621	45.060	I
6	4	27.616	0.595	77.347	8'-10"	6	8'- 6"	1.434	51.068	1.448	51.068	C
6	5	29.028	0.644	86.051	8'-10"	6	8'- 6"	1.527	51.068	1.541	51.068	E
6	6	30.440	0.693	90.227	8'-10"	6	8'- 6"	1.620	51.068	1.633	51.068	G
6	7	31.852	0.741	109.627	8'-10"	6	8'- 6"	1.712	51.068	1.726	51.068	I
6	8	33.264	0.789	124.645	8'-10"	6	8'- 6"	1.805	51.068	1.819	51.068	K
7	4	30.956	0.644	89.885	9'-10"	6	9'- 6"	1.535	57.076	1.552	57.076	C
7	6	33.780	0.741	118.090	9'-10"	6	9'- 6"	1.721	57.076	1.738	57.076	G
7	8	36.604	0.838	132.362	9'-10"	6	9'- 6"	1.906	57.076	1.923	57.076	K
7	10	39.428	0.933	190.758	9'-10"	6	9'- 6"	2.092	57.076	2.109	57.076	O
8	4	34.296	0.691	126.785	10'-10"	6	10'- 6"	1.636	63.084	1.657	63.084	C
8	6	37.120	0.788	142.648	10'-10"	6	10'- 6"	1.822	63.084	1.842	63.084	G
8	8	39.944	0.886	159.699	10'-10"	6	10'- 6"	2.007	63.084	2.028	63.084	K
8	10	42.768	0.983	183.378	10'-10"	6	10'- 6"	2.193	63.084	2.213	63.084	O
9	4	37.636	0.738	149.809	11'-10"	6	11'- 6"	1.738	69.092	1.761	69.092	C
9	6	40.460	0.836	165.793	11'-10"	6	11'- 6"	1.923	69.092	1.947	69.092	G
9	8	43.284	0.950	168.414	11'-10"	6	11'- 6"	2.105	69.092	2.129	69.092	K
9	10	46.108	1.030	206.737	11'-10"	6	11'- 6"	2.294	69.092	2.318	69.092	O
9	12	48.932	1.143	231.984	11'-10"	6	11'- 6"	2.476	69.092	2.500	69.092	S
10	4	40.976	0.837	189.993	12'-10"	6	12'- 6"	1.827	75.100	1.854	75.100	C
10	6	43.800	0.936	187.456	12'-10"	6	12'- 6"	2.013	75.100	2.040	75.100	G
10	8	46.624	1.030	244.869	12'-10"	6	12'- 6"	2.198	75.100	2.225	75.100	K
10	10	49.448	1.130	239.860	12'-10"	6	12'- 6"	2.383	75.100	2.411	75.100	O
10	12	52.272	1.261	276.287	12'-10"	6	12'- 6"	2.580	75.100	2.607	75.100	T
12	6	50.480	1.100	263.413	14'-10"	6	14'- 6"	2.213	87.116	2.246	87.116	H
12	8	53.304	1.218	286.836	14'-10"	6	14'- 6"	2.393	87.116	2.426	87.116	L
12	10	56.128	1.317	275.717	14'-10"	6	14'- 6"	2.578	87.116	2.612	87.116	P
12	12	58.952	1.472	350.844	14'-10"	6	14'- 6"	2.747	87.116	2.781	87.116	T

A COPY OF THE ORIGINAL SEALED AND SIGNED DRAWING IS ON FILE IN THE CENTRAL OFFICE.

SPECIFICATION REFERENCE

SINGLE BOX CULVERTS

2 TO 5 FT. FILLS

VIRGINIA DEPARTMENT OF TRANSPORTATION

VDOT

ROAD AND BRIDGE STANDARDS

REVISION DATE 07/11

SHEET 2 OF 2

1002.06

BCS-10

FOR TYPICAL SECTION, NOTES AND OTHER DETAILS, REFER TO STANDARD BCS-DT.

DIMENSIONS					REINFORCING STEEL																						
SPAN	HGHT	T1	T2	T3							BH1					BH2			BH3				BV1				
(FT.)	(FT.)	TOP SLAB (IN.)	BOTTOM SLAB (IN.)	WALL (IN.)	A	B	C	D	E	F	SIZE	SPACING C-C	a	b	LENGTH	SIZE	SPACING C-C	LENGTH	SIZE	SPACING C-C	a	LENGTH	SIZE	SPACING C-C	LENGTH	NO. BL1 #4 BARS	NO. BL2 #3 BARS
3	3	8"	8"	8"	2	2'- 0"	2	2'- 0"	1	1'- 0"	4	12"	4'- 0"	2'- 8"	8'-10"	4	12"	4'- 0"	--	---	-----	-----	4	12"	4'- 0"	16	8
3	4	8"	8"	8"	2	2'- 0"	2	2'- 0"	2	2'- 0"	4	12"	4'- 0"	3'- 2"	9'-10"	4	12"	4'- 0"	--	---	-----	-----	4	12"	5'- 0"	16	12
4	3	8"	8"	8"	3	3'- 0"	3	3'- 0"	1	1'- 0"	4	11½"	5'- 0"	2'- 8"	9'-10"	4	11½"	5'- 0"	--	---	-----	-----	4	12"	4'- 0"	20	8
4	4	8"	8"	8"	3	3'- 0"	3	3'- 0"	2	2'- 0"	4	11"	5'- 0"	3'- 2"	10'-10"	4	11"	5'- 0"	--	---	-----	-----	4	12"	5'- 0"	20	12
4	5	8"	8"	8"	3	3'- 0"	3	3'- 0"	3	3'- 0"	4	12"	5'- 0"	3'- 8"	11'-10"	5	12"	5'- 0"	3	12"	2'- 3⅝"	4'- 5"	4	12"	6'- 0"	20	16
4	6	8"	8"	8"	3	3'- 0"	3	3'- 0"	4	4'- 0"	4	12"	5'- 0"	4'- 2"	12'-10"	5	12"	5'- 0"	3	12"	2'- 9"	5'- 5"	4	12"	7'- 0"	20	20
5	3	8"	8"	8"	4	4'- 0"	4	4'- 0"	1	1'- 0"	4	12"	6'- 0"	2'- 8"	10'-10"	5	12"	6'- 0"	--	---	-----	-----	4	12"	4'- 0"	24	8
5	4	8"	8"	8"	4	4'- 0"	4	4'- 0"	2	2'- 0"	4	11½"	6'- 0"	3'- 2"	11'-10"	5	11½"	6'- 0"	--	---	-----	-----	4	12"	5'- 0"	24	12
5	5	8"	8"	8"	4	4'- 0"	4	4'- 0"	3	3'- 0"	4	11"	6'- 0"	3'- 8"	12'-10"	5	11"	6'- 0"	--	---	-----	-----	4	12"	6'- 0"	24	16
5	6	8"	8"	8"	4	4'- 0"	4	4'- 0"	4	4'- 0"	4	10½"	6'- 0"	4'- 2"	13'-10"	5	10½"	6'- 0"	--	---	-----	-----	4	12"	7'- 0"	24	20
5	7	8"	8"	8"	4	4'- 0"	4	4'- 0"	5	5'- 0"	4	10"	6'- 0"	4'- 8"	14'-10"	5	10"	6'- 0"	--	---	-----	-----	4	12"	8'- 0"	24	24
6	4	8"	8"	8"	5	5'- 0"	5	5'- 0"	2	2'- 0"	4	9½"	7'- 0"	3'- 2"	12'-10"	5	9½"	7'- 0"	--	---	-----	-----	4	12"	5'- 0"	28	12
6	5	8"	8"	8"	5	5'- 0"	5	5'- 0"	3	3'- 0"	4	11½"	7'- 0"	3'- 8"	13'-10"	6	11½"	7'- 0"	4	11½"	2'- 8⅜"	5'- 2"	4	12"	6'- 0"	28	16
6	6	8"	8"	8"	5	5'- 0"	5	5'- 0"	4	4'- 0"	4	11"	7'- 0"	4'- 2"	14'-10"	6	11"	7'- 0"	3	11"	2'- 8⅜"	5'- 2"	4	12"	7'- 0"	28	20
6	7	8"	8"	8"	5	5'- 0"	5	5'- 0"	5	5'- 0"	4	10½"	7'- 0"	4'- 8"	15'-10"	6	10½"	7'- 0"	3	10½"	2'-11"	5'- 8"	4	12"	8'- 0"	28	24
6	8	8"	8"	8"	5	5'- 0"	5	5'- 0"	6	6'- 0"	4	10"	7'- 0"	5'- 2"	16'-10"	6	10"	7'- 0"	4	10"	3'- 2"	6'- 2"	5	12"	9'- 0"	28	28
7	4	8"	8"	8"	6	6'- 0"	6	6'- 0"	2	2'- 0"	5	10"	8'- 0"	3'- 2"	13'- 8"	6	10"	8'- 0"	3	10"	2'-10¾"	5'- 7"	4	9"	5'- 0"	32	12
7	6	8"	8"	8"	6	6'- 0"	6	6'- 0"	4	4'- 0"	4	9"	8'- 0"	4'- 2"	15'-10"	6	9"	8'- 0"	3	9"	2'-10¾"	5'- 7"	4	12"	7'- 0"	32	20
7	8	8"	8"	8"	6	6'- 0"	6	6'- 0"	6	6'- 0"	4	8½"	8'- 0"	5'- 2"	17'-10"	6	8½"	8'- 0"	3	8½"	3'- 2"	6'- 2"	4	12"	9'- 0"	32	28
7	10	8"	8"	8"	6	6'- 0"	6	6'- 0"	8	8'- 0"	4	7½"	8'- 0"	6'- 2"	19'-10"	6	7½"	8'- 0"	3	7½"	3'- 6"	6'- 9"	5	9"	11'- 0"	32	36
8	4	8"	8"	8"	7	7'- 0"	7	7'- 0"	2	2'- 0"	5	8½"	9'- 0"	3'- 2"	14'- 8"	6	8½"	9'- 0"	3	8½"	3'- 2"	6'- 2"	4	6"	5'- 0"	36	12
8	6	8"	8"	8"	7	7'- 0"	7	7'- 0"	4	4'- 0"	4	7½"	9'- 0"	4'- 2"	16'-10"	6	7½"	9'- 0"	3	7½"	3'- 2"	6'- 2"	4	9"	7'- 0"	36	20
8	8	8"	8"	8"	7	7'- 0"	7	7'- 0"	6	6'- 0"	4	7"	9'- 0"	5'- 2"	18'-10"	6	7"	9'- 0"	3	7"	3'- 2"	6'- 2"	4	12"	9'- 0"	36	28
8	10	8"	8"	8"	7	7'- 0"	7	7'- 0"	8	8'- 0"	4	6½"	9'- 0"	6'- 2"	20'-10"	6	6½"	9'- 0"	3	6½"	3'- 6"	6'- 9"	5	9"	11'- 0"	36	36
9	4	8"	8"	8"	8	8'- 0"	8	8'- 0"	2	2'- 0"	5	7½"	10'- 0"	3'- 2"	15'- 8"	6	7½"	10'- 0"	3	7½"	3'- 3⅝"	6'- 5"	4	5½"	5'- 0"	40	12
9	6	8¼"	8¼"	8"	8	8'- 0"	8	8'- 0"	4	4'- 0"	5	6½"	10'- 0"	4'- 2¼"	17'- 9"	6	6½"	10'- 0"	--	---	-----	-----	4	7½"	7'- 0"	40	20
9	8	8¼"	8¼"	8"	8	8'- 0"	8	8'- 0"	6	6'- 0"	4	6"	10'- 0"	5'- 2¼"	19'-10"	6	6"	10'- 0"	3	6"	3'- 3⅝"	6'- 5"	4	10½"	9'- 0"	40	28
9	10	8½"	8½"	8"	8	8'- 0"	8	8'- 0"	8	8'- 0"	5	7½"	10'- 0"	6'- 2½"	21'- 9"	7	7½"	10'- 0"	3	7½"	3'- 6"	6'- 9"	5	10"	11'- 1"	40	36
9	12	9"	9"	8"	8	8'- 0"	8	8'- 0"	10	10'- 0"	6	8½"	10'- 0"	7'- 3"	23'- 8"	8	8½"	10'- 0"	--	---	-----	-----	7	12"	13'- 2"	40	44
10	4	8¼"	8¼"	8"	9	9'- 0"	9	9'- 0"	2	2'- 0"	5	6½"	11'- 0"	3'- 2¼"	16'- 9"	6	6½"	11'- 0"	3	6½"	3'- 6"	6'-10"	5	6"	5'- 0"	44	12
10	6	8½"	8½"	8"	9	9'- 0"	9	9'- 0"	4	4'- 0"	6	7½"	11'- 0"	4'- 2½"	18'- 7"	7	7½"	11'- 0"	--	---	-----	-----	4	6"	7'- 1"	44	20
10	8	8¾"	8¾"	8"	9	9'- 0"	9	9'- 0"	6	6'- 0"	4	5½"	11'- 0"	5'- 2¾"	20'-11"	6	5½"	11'- 0"	3	5½"	3'- 6"	6'-10"	4	9"	9'- 2"	44	28
10	10	9¼"	9¼"	8"	9	9'- 0"	9	9'- 0"	8	8'- 0"	4	5"	11'- 0"	6'- 3¼"	23'- 0"	6	5"	11'- 0"	--	---	-----	-----	5	12"	11'- 2"	44	36
10	12	9¼"	9¼"	10"	9	9'- 0"	9	9'- 0"	10	10'- 0"	4	8"	11'- 4"	7'- 3¼"	25'- 4"	8	8"	11'- 0"	4	8"	4'- 1"	7'-11"	6	12"	13'- 2"	44	44
12	6	10¾"	10¾"	8"	11	11'- 0"	11	11'- 0"	4	4'- 0"	6	7½"	13'- 0"	4'- 4¾"	21'- 0"	8	7½"	13'- 0"	3	7½"	3'-10¾"	7'- 7"	4	5½"	7'- 5"	52	20
12	8	10¾"	10¾"	8"	11	11'- 0"	11	11'- 0"	6	6'- 0"	5	6"	13'- 0"	5'- 4¾"	23'- 2"	7	6"	13'- 0"	--	---	-----	-----	4	7½"	9'- 5"	52	28
12	10	11"	11"	8"	11	11'- 0"	11	11'- 0"	8	8'- 0"	5	7"	13'- 0"	6'- 5"	25'- 2"	8	7"	13'- 0"	3	7"	3'-10¾"	7'- 7"	4	10½"	11'- 6"	52	36
12	12	11¼"	11¼"	10"	11	11'- 0"	11	11'- 0"	10	10'- 0"	5	6½"	13'- 4"	7'- 5¼"	27'- 7"	8	6½"	13'- 0"	3	6½"	4'- 2"	8'- 1"	6	12"	13'- 6"	52	44

A COPY OF THE ORIGINAL SEALED AND SIGNED DRAWING IS ON FILE IN THE CENTRAL OFFICE.

VDOT
ROAD AND BRIDGE STANDARDS

SHEET 1 OF 2 | REVISION DATE
1002.07 | 07/11

SINGLE BOX CULVERTS

5 TO 10 FT. FILLS

VIRGINIA DEPARTMENT OF TRANSPORTATION

SPECIFICATION REFERENCE

FOR TYPICAL SECTION, NOTES AND OTHER DETAILS, REFER TO STANDARD BCS-DT.

SPAN (FT.)	HGHT (FT.)	REINFORCING STEEL (LBS/LONG. JT)	QUAN./LF CONCRETE CLASS A4 (CY/LF)	QUAN./LF REINFORCING STEEL (LBS/LF)	HEADWALLS G HEADWALL LENGTH	HEADWALLS HW1 SIZE	HEADWALLS HW1 LENGTH	INLET CONCRETE CL. A4 (CY)	INLET REINFORCING STEEL (LBS)	OUTLET CONCRETE CL. A4 (CY)	OUTLET REINFORCING STEEL (LBS)	WINGWALL
3	3	16.184	0.401	36.185	5'-10"	6	5'- 6"	1.038	33.044	1.042	33.044	A
3	4	17.596	0.450	40.361	5'-10"	6	5'- 6"	1.131	33.044	1.134	33.044	C
4	3	19.524	0.450	42.391	6'-10"	6	6'- 6"	1.139	39.052	1.146	39.052	A
4	4	20.936	0.499	47.628	6'-10"	6	6'- 6"	1.232	39.052	1.239	39.052	C
4	5	22.348	0.547	60.274	6'-10"	6	6'- 6"	1.324	39.052	1.332	39.052	E
4	6	23.760	0.596	67.580	6'-10"	6	6'- 6"	1.417	39.052	1.424	39.052	G
5	3	22.864	0.499	51.373	7'-10"	6	7'- 6"	1.240	45.060	1.251	45.060	A
5	4	24.276	0.548	56.781	7'-10"	6	7'- 6"	1.333	45.060	1.343	45.060	C
5	5	25.688	0.597	62.422	7'-10"	6	7'- 6"	1.426	45.060	1.436	45.060	E
5	6	27.100	0.646	68.330	7'-10"	6	7'- 6"	1.518	45.060	1.529	45.060	G
5	7	28.512	0.694	74.544	7'-10"	6	7'- 6"	1.611	45.060	1.621	45.060	I
6	4	27.616	0.596	69.998	8'-10"	6	8'- 6"	1.434	51.068	1.448	51.068	C
6	5	29.028	0.644	88.369	8'-10"	6	8'- 6"	1.527	51.068	1.541	51.068	E
6	6	30.440	0.693	88.612	8'-10"	6	8'- 6"	1.620	51.068	1.633	51.068	G
6	7	31.852	0.742	98.634	8'-10"	6	8'- 6"	1.712	51.068	1.726	51.068	I
6	8	33.264	0.790	122.571	8'-10"	6	8'- 6"	1.805	51.068	1.819	51.068	K
7	4	30.956	0.643	107.920	9'-10"	6	9'- 6"	1.535	57.076	1.552	57.076	C
7	6	33.780	0.741	109.692	9'-10"	6	9'- 6"	1.721	57.076	1.738	57.076	G
7	8	36.604	0.839	126.917	9'-10"	6	9'- 6"	1.906	57.076	1.923	57.076	K
7	10	39.428	0.935	165.192	9'-10"	6	9'- 6"	2.092	57.076	2.109	57.076	O
8	4	34.296	0.690	138.922	10'-10"	6	10'- 6"	1.636	63.084	1.657	63.084	C
8	6	37.120	0.788	140.651	10'-10"	6	10'- 6"	1.822	63.084	1.842	63.084	G
8	8	39.944	0.886	154.019	10'-10"	6	10'- 6"	2.007	63.084	2.028	63.084	K
8	10	42.768	0.982	190.266	10'-10"	6	10'- 6"	2.193	63.084	2.213	63.084	O
9	4	37.636	0.737	161.601	11'-10"	6	11'- 6"	1.738	69.092	1.761	69.092	C
9	6	40.460	0.851	173.018	11'-10"	6	11'- 6"	1.920	69.092	1.944	69.092	G
9	8	43.284	0.949	183.366	11'-10"	6	11'- 6"	2.105	69.092	2.129	69.092	K
9	10	46.108	1.061	226.058	11'-10"	6	11'- 6"	2.288	69.092	2.311	69.092	O
9	12	48.932	1.188	275.274	11'-10"	6	11'- 6"	2.467	69.092	2.491	69.092	S
10	4	40.976	0.801	199.247	12'-10"	6	12'- 6"	1.835	75.100	1.862	75.100	C
10	6	43.800	0.916	217.106	12'-10"	6	12'- 6"	2.016	75.100	2.043	75.100	G
10	8	46.624	1.033	211.738	12'-10"	6	12'- 6"	2.198	75.100	2.225	75.100	K
10	10	49.448	1.166	223.119	12'-10"	6	12'- 6"	2.394	75.100	2.421	75.100	P
10	12	52.272	1.429	253.959	12'-10"	6	12'- 6"	2.580	75.100	2.607	75.100	T
12	6	50.480	1.201	294.130	14'-10"	6	14'- 6"	2.186	87.116	2.219	87.116	H
12	8	53.304	1.301	268.332	14'-10"	6	14'- 6"	2.371	87.116	2.405	87.116	L
12	10	56.128	1.419	294.385	14'-10"	6	14'- 6"	2.551	87.116	2.585	87.116	P
12	12	58.952	1.705	351.150	14'-10"	6	14'- 6"	2.731	87.116	2.765	87.116	T

A COPY OF THE ORIGINAL SEALED AND SIGNED DRAWING IS ON FILE IN THE CENTRAL OFFICE.

SPECIFICATION REFERENCE

SINGLE BOX CULVERTS

5 TO 10 FT. FILLS

VIRGINIA DEPARTMENT OF TRANSPORTATION

VDOT

ROAD AND BRIDGE STANDARDS

REVISION DATE 07/11

SHEET 2 OF 2

1002.08

BCS-20

FOR TYPICAL SECTION, NOTES AND OTHER DETAILS, REFER TO STANDARD BCS-DT.

DIMENSIONS					REINFORCING STEEL																						
SPAN	HGHT	T1	T2	T3							BH1					BH2			BH3				BV1				
(FT.)	(FT.)	TOP SLAB (IN.)	BOTTOM SLAB (IN.)	WALL (IN.)	A	B	C	D	E	F	SIZE	SPACING C-C	a	b	LENGTH	SIZE	SPACING C-C	LENGTH	SIZE	SPACING C-C	a	LENGTH	SIZE	SPACING C-C	LENGTH	NO. BL1 #4 BARS	NO. BL2 #3 BARS
3	3	8"	8"	8"	2	2'-0"	2	2'-0"	1	1'-0"	4	12"	4'-0"	2'-8"	8'-10"	5	12"	4'-0"	3	12"	2'-2"	4'- 1"	4	12"	4'-0"	16	8
3	4	8"	8"	8"	2	2'-0"	2	2'-0"	2	2'-0"	4	12"	4'-0"	3'-2"	9'-10"	5	12"	4'-0"	--	---	-----	-----	4	12"	5'-0"	16	12
4	3	8"	8"	8"	3	3'-0"	3	3'-0"	1	1'-0"	4	10½"	5'-0"	2'-8"	9'-10"	5	10½"	5'-0"	--	---	-----	-----	4	12"	4'-0"	20	8
4	4	8"	8"	8"	3	3'-0"	3	3'-0"	2	2'-0"	4	10"	5'-0"	3'-2"	10'-10"	5	10"	5'-0"	--	---	-----	-----	4	12"	5'-0"	20	12
4	5	8"	8"	8"	3	3'-0"	3	3'-0"	3	3'-0"	4	9½"	5'-0"	3'-8"	11'-10"	5	9½"	5'-0"	--	---	-----	-----	4	12"	6'-0"	20	16
4	6	8"	8"	8"	3	3'-0"	3	3'-0"	4	4'-0"	4	9½"	5'-0"	4'-2"	12'-10"	5	9½"	5'-0"	--	---	-----	-----	4	12"	7'-0"	20	20
5	3	8"	8"	8"	4	4'-0"	4	4'-0"	1	1'-0"	5	10½"	6'-0"	2'-10"	11'-1"	6	10½"	6'-0"	--	---	-----	-----	4	9"	4'-0"	24	8
5	4	8"	8"	8"	4	4'-0"	4	4'-0"	2	2'-0"	4	10"	6'-0"	3'-2"	11'-10"	6	10"	6'-0"	3	10"	2'-6"	4'-10"	4	12"	5'-0"	24	12
5	5	8"	8"	8"	4	4'-0"	4	4'-0"	3	3'-0"	4	9½"	6'-0"	3'-8"	12'-10"	6	9½"	6'-0"	3	9½"	2'-6"	4'-10"	4	12"	6'-0"	24	16
5	6	8"	8"	8"	4	4'-0"	4	4'-0"	4	4'-0"	4	9"	6'-0"	4'-2"	13'-10"	6	9"	6'-0"	--	---	-----	-----	4	12"	7'-0"	24	20
5	7	8"	8"	8"	4	4'-0"	4	4'-0"	5	5'-0"	4	9"	6'-0"	4'-8"	14'-10"	6	9"	6'-0"	--	---	-----	-----	5	12"	8'-0"	24	24
6	4	8¾"	8¾"	8"	5	5'-0"	5	5'-0"	2	2'-0"	5	8"	7'-0"	3'-5"	13'-2"	6	8"	7'-0"	--	---	-----	-----	4	9"	5'-2"	28	12
6	5	8¾"	8¾"	8"	5	5'-0"	5	5'-0"	3	3'-0"	4	8"	7'-0"	3'-9"	14'-0"	6	8"	7'-0"	3	8"	2'-9"	5'- 3"	4	12"	6'-2"	28	16
6	6	8¾"	8¾"	8"	5	5'-0"	5	5'-0"	4	4'-0"	4	7½"	7'-0"	4'-3"	15'-0"	6	7½"	7'-0"	3	7½"	2'-10"	5'-4"	4	12"	7'-2"	28	20
6	7	8¾"	8¾"	8"	5	5'-0"	5	5'-0"	5	5'-0"	4	7½"	7'-0"	4'-9"	16'-0"	6	7½"	7'-0"	3	7½"	3'-0"	5'-9"	5	12"	8'-1"	28	24
6	8	8¾"	8¾"	8"	5	5'-0"	5	5'-0"	6	6'-0"	5	7"	7'-0"	5'-5"	17'-2"	6	7"	7'-0"	--	---	-----	-----	6	12"	9'-1"	28	28
7	4	9¾"	9¾"	8"	6	6'-0"	6	6'-0"	2	2'-0"	4	7"	8'-0"	3'-4"	14'-2"	6	7"	8'-0"	3	7"	2'-11"	5'-8"	4	7½"	5'-3"	32	12
7	6	10"	10"	8"	6	6'-0"	6	6'-0"	4	4'-0"	4	6½"	8'-0"	4'-4"	16'-2"	6	6½"	8'-0"	--	---	-----	-----	4	12"	7'-4"	32	20
7	8	10"	10"	8"	6	6'-0"	6	6'-0"	6	6'-0"	5	6½"	8'-0"	5'-6"	18'-5"	6	6½"	8'-0"	--	---	-----	-----	5	12"	9'-4"	32	28
7	10	10"	10"	8"	6	6'-0"	6	6'-0"	8	8'-0"	5	7½"	8'-0"	6'-6"	20'-5"	7	7½"	8'-0"	3	7½"	3'-8"	7'-2"	6	9½"	11'-4"	32	36
8	4	10¾"	10¾"	8"	7	7'-0"	7	7'-0"	2	2'-0"	4	6"	9'-0"	3'-5"	15'-4"	6	6"	9'-0"	3	6"	3'-2"	6'-1"	4	6½"	5'-5"	36	12
8	6	11"	11"	8"	7	7'-0"	7	7'-0"	4	4'-0"	5	7"	9'-0"	4'-8"	17'-7"	7	7"	9'-0"	--	---	-----	-----	4	11"	7'-6"	36	20
8	8	11¼"	11¼"	8"	7	7'-0"	7	7'-0"	6	6'-0"	5	9"	9'-0"	5'-8"	19'-7"	8	9"	9'-0"	3	9"	3'-5"	6'-7"	5	12"	9'-6"	36	28
8	10	11¼"	11¼"	8"	7	7'-0"	7	7'-0"	8	8'-0"	5	5½"	9'-0"	6'-8"	21'-7"	6	5½"	9'-0"	--	---	-----	-----	6	10½"	11'-6"	36	36
9	4	12"	12"	8"	8	8'-0"	8	8'-0"	2	2'-0"	4	5½"	10'-0"	3'-6"	16'-6"	6	5½"	10'-0"	3	5½"	3'-4"	6'-5"	4	6"	5'-8"	40	12
9	6	12¼"	12¼"	8"	8	8'-0"	8	8'-0"	4	4'-0"	5	8"	10'-0"	4'-9"	18'-9"	8	8"	10'-0"	--	---	-----	-----	4	10"	7'-9"	40	20
9	8	12¼"	12¼"	8"	8	8'-0"	8	8'-0"	6	6'-0"	4	6½"	10'-0"	5'-7"	20'-7"	7	6½"	10'-0"	3	6½"	3'-6"	6'-9"	5	12"	9'-8"	40	28
9	10	12½"	12½"	8"	8	8'-0"	8	8'-0"	8	8'-0"	5	6"	10'-0"	6'-9"	22'-10"	7	6"	10'-0"	--	---	-----	-----	7	12"	11'-8"	40	36
9	12	12½"	12½"	9"	8	8'-0"	8	8'-0"	10	10'-0"	6	7½"	10'-2"	7'-11"	25'-2"	8	7½"	10'-1"	3	7½"	4'-4"	8'-5"	5	5½"	13'-8"	40	44
10	4	13"	13"	8"	9	9'-0"	9	9'-0"	2	2'-0"	5	6"	11'-0"	3'-9"	17'-11"	7	6"	11'-0"	--	---	-----	-----	4	5"	5'-10"	44	12
10	6	13"	13"	8"	9	9'-0"	9	9'-0"	4	4'-0"	5	7½"	11'-0"	4'-9"	19'-11"	8	7½"	11'-0"	3	7½"	3'-6"	6'-10"	4	8"	7'-10"	44	20
10	8	13"	13"	8"	9	9'-0"	9	9'-0"	6	6'-0"	5	7½"	11'-0"	5'-9"	21'-11"	8	7½"	11'-0"	3	7½"	3'-7"	6'-11"	4	12"	9'-10"	44	28
10	10	13"	13"	8"	9	9'-0"	9	9'-0"	8	8'-0"	5	5½"	11'-0"	6'-9"	23'-11"	7	5½"	11'-0"	--	---	-----	-----	6	12"	11'-10"	44	36
10	12	13"	13"	9"	9	9'-0"	9	9'-0"	10	10'-0"	7	7"	11'-2"	8'-3"	26'-7"	8	7"	11'-1"	--	---	-----	-----	5	6"	13'-10"	44	44
12	6	15"	15"	8"	11	11'-0"	11	11'-0"	4	4'-0"	5	6½"	13'-0"	4'-11"	22'-3"	8	6½"	13'-0"	--	---	-----	-----	4	6"	8'-2"	52	20
12	8	15¼"	15¼"	8"	11	11'-0"	11	11'-0"	6	6'-0"	6	6"	13'-0"	6'-2"	24'-5"	8	6"	13'-0"	--	---	-----	-----	4	10"	10'-3"	52	28
12	10	15¼"	15¼"	8"	11	11'-0"	11	11'-0"	8	8'-0"	4	6"	13'-0"	6'-10"	26'-1"	8	6"	13'-0"	4	6"	4'-2"	8'-0"	6	12"	12'-2"	52	36
12	12	15¼"	15¼"	9½"	11	11'-0"	11	11'-0"	10	10'-0"	6	6"	13'-3"	8'-2"	28'-8"	8	6"	13'-3"	--	---	-----	-----	5	6½"	14'-2"	52	44

A COPY OF THE ORIGINAL SEALED AND SIGNED DRAWING IS ON FILE IN THE CENTRAL OFFICE

VDOT
ROAD AND BRIDGE STANDARDS

SHEET 1 OF 2

1002.09

REVISION DATE
07/11

SINGLE BOX CULVERTS

10 TO 20 FT. FILLS

VIRGINIA DEPARTMENT OF TRANSPORTATION

SPECIFICATION REFERENCE

FOR TYPICAL SECTION, NOTES AND OTHER DETAILS, REFER TO STANDARD BCS-DT.

BCS-20

SPAN (FT.)	HGHT (FT.)	REINFORCING STEEL (LBS/LONG. JT)	QUAN./LF CONCRETE CLASS A4 (CY/LF)	QUAN./LF REINFORCING STEEL (LBS/LF)	HEADWALLS G HEADWALL LENGTH	HEADWALLS HWI SIZE	HEADWALLS HWI LENGTH	HEADWALLS INLET CONCRETE CL. A4 (CY)	HEADWALLS INLET REINFORCING STEEL (LBS)	HEADWALLS OUTLET CONCRETE CL. A4 (CY)	HEADWALLS OUTLET REINFORCING STEEL (LBS)	HEADWALLS WINGWALL
3	3	16.184	0.400	46.498	5'-10"	6	5'-6"	1.038	33.044	1.042	33.044	A
3	4	17.596	0.450	44.657	5'-10"	6	5'-6"	1.131	33.044	1.134	33.044	C
4	3	19.524	0.449	50.604	6'-10"	6	6'-6"	1.139	39.052	1.146	39.052	A
4	4	20.936	0.498	56.391	6'-10"	6	6'-6"	1.232	39.052	1.239	39.052	C
4	5	22.348	0.547	62.489	6'-10"	6	6'-6"	1.324	39.052	1.332	39.052	E
4	6	23.760	0.596	67.017	6'-10"	6	6'-6"	1.417	39.052	1.424	39.052	G
5	3	22.864	0.497	75.669	7'-10"	6	7'-6"	1.240	45.060	1.251	45.060	A
5	4	24.276	0.546	79.112	7'-10"	6	7'-6"	1.333	45.060	1.343	45.060	C
5	5	25.688	0.595	86.230	7'-10"	6	7'-6"	1.426	45.060	1.436	45.060	E
5	6	27.100	0.644	84.196	7'-10"	6	7'-6"	1.518	45.060	1.529	45.060	G
5	7	28.512	0.693	94.817	7'-10"	6	7'-6"	1.611	45.060	1.621	45.060	I
6	4	27.616	0.627	108.307	8'-10"	6	8'-6"	1.432	51.068	1.446	51.068	C
6	5	29.028	0.676	107.430	8'-10"	6	8'-6"	1.524	51.068	1.538	51.068	E
6	6	30.440	0.725	117.454	8'-10"	6	8'-6"	1.617	51.068	1.631	51.068	G
6	7	31.852	0.773	129.488	8'-10"	6	8'-6"	1.710	51.068	1.724	51.068	I
6	8	33.264	0.821	157.284	8'-10"	6	8'-6"	1.803	51.068	1.816	51.068	K
7	4	30.956	0.731	129.127	9'-10"	6	9'-6"	1.543	57.076	1.560	57.076	D
7	6	33.780	0.843	126.868	9'-10"	6	9'-6"	1.727	57.076	1.744	57.076	H
7	8	36.604	0.938	170.365	9'-10"	6	9'-6"	1.912	57.076	1.929	57.076	L
7	10	39.428	1.033	219.296	9'-10"	6	9'-6"	2.098	57.076	2.115	57.076	P
8	4	34.296	0.846	159.600	10'-10"	6	10'-6"	1.630	63.084	1.650	63.084	D
8	6	37.120	0.958	172.840	10'-10"	6	10'-6"	1.813	63.084	1.833	63.084	H
8	8	39.944	1.070	190.718	10'-10"	6	10'-6"	1.996	63.084	2.016	63.084	L
8	10	42.768	1.165	238.930	10'-10"	6	10'-6"	2.181	63.084	2.202	63.084	P
9	4	37.636	0.990	186.271	11'-10"	6	11'-6"	1.707	69.092	1.731	69.092	D
9	6	40.460	1.105	190.592	11'-10"	6	11'-6"	1.889	69.092	1.913	69.092	H
9	8	43.284	1.202	207.534	11'-10"	6	11'-6"	2.075	69.092	2.098	69.092	L
9	10	46.108	1.312	270.322	11'-10"	6	11'-6"	2.257	69.092	2.281	69.092	P
9	12	48.932	1.492	338.890	11'-10"	6	11'-6"	2.442	69.092	2.466	69.092	T
10	4	40.976	1.132	222.972	12'-10"	6	12'-6"	1.780	75.100	1.807	75.100	D
10	6	43.800	1.229	235.180	12'-10"	6	12'-6"	1.966	75.100	1.993	75.100	H
10	8	46.624	1.328	242.383	12'-10"	6	12'-6"	2.151	75.100	2.178	75.100	L
10	10	49.448	1.423	291.088	12'-10"	6	12'-6"	2.337	75.100	2.364	75.100	P
10	12	52.272	1.601	398.098	12'-10"	6	12'-6"	2.522	75.100	2.549	75.100	T
12	6	50.480	1.551	284.965	14'-10"	6	14'-6"	2.094	87.116	2.128	87.116	H
12	8	53.304	1.665	354.490	14'-10"	6	14'-6"	2.293	87.116	2.326	87.116	M
12	10	56.128	1.764	343.084	14'-10"	6	14'-6"	2.478	87.116	2.512	87.116	Q
12	12	58.952	1.991	427.061	14'-10"	6	14'-6"	2.663	87.116	2.697	87.116	U

A COPY OF THE ORIGINAL SEALED AND SIGNED DRAWING IS ON FILE IN THE CENTRAL OFFICE

SPECIFICATION REFERENCE

SINGLE BOX CULVERTS

10 TO 20 FT. FILLS

VIRGINIA DEPARTMENT OF TRANSPORTATION

VDOT

ROAD AND BRIDGE STANDARDS

REVISION DATE 07/11

SHEET 2 OF 2

1002.10

BCS-30

FOR TYPICAL SECTION, NOTES AND OTHER DETAILS, REFER TO STANDARD BCS-DT.

DIMENSIONS					REINFORCING STEEL																						
SPAN	HGHT	T1	T2	T3							BH1					BH2			BH3				BV1				
(FT.)	(FT.)	TOP SLAB (IN.)	BOTTOM SLAB (IN.)	WALL (IN.)	A	B	C	D	E	F	SIZE	SPACING C-C	a	b	LENGTH	SIZE	SPACING C-C	LENGTH	SIZE	SPACING C-C	a	LENGTH	SIZE	SPACING C-C	LENGTH	NO. BL1 #4 BARS	NO. BL2 #3 BARS
3	3	8"	8"	8"	2	2'-0"	2	2'-0"	1	1'-0"	4	11½"	4'-0"	2'-8"	8'-10"	5	11½"	4'-0"	--	---	----	-----	4	12"	4'-0"	16	8
3	4	8"	8"	8"	2	2'-0"	2	2'-0"	2	2'-0"	4	11"	4'-0"	3'-2"	9'-10"	5	11"	4'-0"	--	---	----	-----	4	12"	5'-0"	16	12
4	3	8"	8"	8"	3	3'-0"	3	3'-0"	1	1'-0"	4	10½"	5'-0"	2'-8"	9'-10"	6	10½"	5'-0"	4	10½"	2'-4"	4'-5"	4	11½"	4'-0"	20	8
4	4	8"	8"	8"	3	3'-0"	3	3'-0"	2	2'-0"	4	10"	5'-0"	3'-2"	10'-10"	6	10"	5'-0"	3	10"	2'-4"	4'-5"	4	12"	5'-0"	20	12
4	5	8"	8"	8"	3	3'-0"	3	3'-0"	3	3'-0"	4	9½"	5'-0"	3'-8"	11'-10"	6	9½"	5'-0"	3	9½"	2'-6"	4'-10"	4	12"	6'-0"	20	16
4	6	8"	8"	8"	3	3'-0"	3	3'-0"	4	4'-0"	4	9½"	5'-0"	4'-2"	12'-10"	6	9½"	5'-0"	3	9½"	2'-9"	5'-3"	5	12"	7'-0"	20	20
5	3	9½"	9½"	8"	4	4'-0"	4	4'-0"	1	1'-0"	4	8½"	6'-0"	2'-10"	11'-1"	6	8½"	6'-0"	3	8½"	2'-6"	4'-10"	4	9"	4'-3"	24	8
5	4	9¾"	9¾"	8"	4	4'-0"	4	4'-0"	2	2'-0"	4	8"	6'-0"	3'-4"	12'-2"	6	8"	6'-0"	--	---	----	-----	4	12"	5'-3"	24	12
5	5	9¾"	9¾"	8"	4	4'-0"	4	4'-0"	3	3'-0"	4	8"	6'-0"	3'-10"	13'-2"	6	8"	6'-0"	--	---	----	-----	4	12"	6'-3"	24	16
5	6	9¾"	9¾"	8"	4	4'-0"	4	4'-0"	4	4'-0"	4	8"	6'-0"	4'-4"	14'-2"	6	8"	6'-0"	--	---	----	-----	5	12"	7'-3"	24	20
5	7	9¾"	9¾"	8"	4	4'-0"	4	4'-0"	5	5'-0"	4	8"	6'-0"	4'-10"	15'-2"	6	8"	6'-0"	--	---	----	-----	6	12"	8'-3"	24	24
6	4	11½"	11½"	8"	5	5'-0"	5	5'-0"	2	2'-0"	4	7"	7'-0"	3'-6"	13'-5"	6	7"	7'-0"	--	---	----	-----	4	12"	5'-7"	28	12
6	5	11½"	11½"	8"	5	5'-0"	5	5'-0"	3	3'-0"	4	6½"	7'-0"	4'-0"	14'-5"	6	6½"	7'-0"	--	---	----	-----	4	12"	6'-7"	28	16
6	6	11½"	11½"	8"	5	5'-0"	5	5'-0"	4	4'-0"	4	6½"	7'-0"	4'-6"	15'-5"	6	6½"	7'-0"	--	---	----	-----	4	12"	7'-7"	28	20
6	7	11½"	11½"	8"	5	5'-0"	5	5'-0"	5	5'-0"	4	6½"	7'-0"	5'-0"	16'-5"	6	6½"	7'-0"	--	---	----	-----	5	12"	8'-6"	28	24
6	8	11½"	11½"	8"	5	5'-0"	5	5'-0"	6	6'-0"	4	6½"	7'-0"	5'-6"	17'-5"	6	6½"	7'-0"	--	---	----	-----	6	10½"	9'-7"	28	28
7	4	13"	13"	8"	6	6'-0"	6	6'-0"	2	2'-0"	4	6"	8'-0"	3'-7"	14'-8"	6	6"	8'-0"	--	---	----	-----	4	10½"	5'-10"	32	12
7	6	13"	13"	8"	6	6'-0"	6	6'-0"	4	4'-0"	5	7½"	8'-0"	4'-9"	16'-11"	8	7½"	8'-0"	--	---	----	-----	4	12"	7'-10"	32	20
7	8	13"	13"	8"	6	6'-0"	6	6'-0"	6	6'-0"	5	7"	8'-0"	5'-9"	18'-11"	7	7"	8'-0"	--	---	----	-----	6	12"	9'-10"	32	28
7	10	13"	13"	9"	6	6'-0"	6	6'-0"	8	8'-0"	5	5½"	8'-2"	6'-9"	21'-1"	6	5½"	8'-1"	--	---	----	-----	5	5½"	11'-10"	32	36
8	4	13¾"	13¾"	8"	7	7'-0"	7	7'-0"	2	2'-0"	5	8"	9'-0"	3'-10"	16'-0"	8	8"	9'-0"	3	8"	3'-2"	6'-1"	4	8"	5'-11"	36	12
8	6	13¾"	13¾"	8"	7	7'-0"	7	7'-0"	4	4'-0"	4	8"	9'-0"	4'-8"	17'-10"	8	8"	9'-0"	3	8"	3'-3"	6'-2"	4	12"	7'-11"	36	20
8	8	13¾"	13¾"	8"	7	7'-0"	7	7'-0"	6	6'-0"	5	6"	9'-0"	5'-10"	20'-0"	7	6"	9'-0"	--	---	----	-----	6	12"	9'-11"	36	28
8	10	13½"	13½"	9½"	7	7'-0"	7	7'-0"	8	8'-0"	5	6"	9'-3"	6'-10"	22'-3"	7	6"	9'-3"	--	---	----	-----	5	6"	11'-11"	36	36
9	4	15¼"	15¼"	8"	8	8'-0"	8	8'-0"	2	2'-0"	4	7½"	10'-0"	3'-10"	17'-1"	8	7½"	10'-0"	4	7½"	3'-4"	6'-5"	4	7½"	6'-2"	40	12
9	6	15½"	15½"	8"	8	8'-0"	8	8'-0"	4	4'-0"	4	7½"	10'-0"	4'-10"	19'-1"	8	7½"	10'-0"	3	7½"	3'-4"	6'-6"	4	12"	8'-3"	40	20
9	8	15½"	15½"	8"	8	8'-0"	8	8'-0"	6	6'-0"	4	7½"	10'-0"	5'-10"	21'-1"	8	7½"	10'-0"	4	7½"	3'-9"	7'-3"	6	12"	10'-2"	40	28
9	10	15½"	15½"	9"	8	8'-0"	8	8'-0"	8	8'-0"	5	5½"	10'-0"	7'-0"	23'-6"	7	5½"	10'-1"	--	---	----	-----	5	6"	12'-2"	40	36
9	12	15¼"	15¼"	11"	8	8'-0"	8	8'-0"	10	10'-0"	6	5½"	10'-6"	8'-2"	25'-11"	7	5½"	10'-6"	--	---	----	-----	7	9"	14'-2"	40	44
10	4	17"	17"	8"	9	9'-0"	9	9'-0"	2	2'-0"	5	5½"	11'-0"	4'-2"	18'-7"	7	5½"	11'-0"	--	---	----	-----	4	7½"	6'-6"	44	12
10	6	17¼"	17¼"	8"	9	9'-0"	9	9'-0"	4	4'-0"	5	7"	11'-0"	5'-2"	20'-7"	8	7"	11'-0"	--	---	----	-----	4	12"	8'-6"	44	20
10	8	17¼"	17¼"	8"	9	9'-0"	9	9'-0"	6	6'-0"	5	7"	11'-0"	6'-2"	22'-7"	8	7"	11'-0"	--	---	----	-----	6	12"	10'-6"	44	28
10	10	17¼"	17¼"	9"	9	9'-0"	9	9'-0"	8	8'-0"	6	6½"	11'-2"	7'-4"	24'-11"	8	6½"	11'-1"	--	---	----	-----	5	6"	12'-6"	44	36
10	12	17"	17"	11"	9	9'-0"	9	9'-0"	10	10'-0"	6	6"	11'-6"	8'-3"	27'-3"	8	6"	11'-1"	--	---	----	-----	7	9½"	14'-5"	44	44
12	6	19½"	19½"	8"	11	11'-0"	11	11'-0"	4	4'-0"	4	5½"	13'-0"	5'-2"	22'-9"	8	5½"	13'-0"	--	---	----	-----	4	12"	8'-11"	52	20
12	8	20"	20"	8"	11	11'-0"	11	11'-0"	6	6'-0"	5	6"	13'-0"	6'-4"	25'-1"	8	6"	13'-0"	--	---	----	-----	5	12"	11'-0"	52	28
12	10	20¼"	20¼"	8½"	11	11'-0"	11	11'-0"	8	8'-0"	6	5½"	13'-0"	7'-7"	27'-4"	8	5½"	13'-0"	--	---	----	-----	6	9½"	13'-0"	52	36
12	12	20¼"	20¼"	11"	11	11'-0"	11	11'-0"	10	10'-0"	6	5½"	13'-6"	8'-7"	29'-9"	8	5½"	13'-6"	--	---	----	-----	7	9½"	15'-0"	52	44

A COPY OF THE ORIGINAL SEALED AND SIGNED DRAWING IS ON FILE IN THE CENTRAL OFFICE

VDOT
ROAD AND BRIDGE STANDARDS

SHEET 1 OF 2
1002.11

REVISION DATE
07/11

SINGLE BOX CULVERTS

20 TO 30 FT. FILLS

VIRGINIA DEPARTMENT OF TRANSPORTATION

SPECIFICATION REFERENCE

FOR TYPICAL SECTION, NOTES AND OTHER DETAILS, REFER TO STANDARD BCS-DT.

BCS-30

SPAN (FT.)	HGHT (FT.)	REINFORCING STEEL (LBS/LONG. JT)	QUAN./LF CONCRETE CLASS A4 (CY/LF)	QUAN./LF REINFORCING STEEL (LBS/LF)	HEADWALLS G HEADWALL LENGTH	HEADWALLS HWI SIZE	HEADWALLS HWI LENGTH	HEADWALLS INLET CONCRETE CL. A4 (CY)	HEADWALLS INLET REINFORCING STEEL (LBS)	HEADWALLS OUTLET CONCRETE CL. A4 (CY)	HEADWALLS OUTLET REINFORCING STEEL (LBS)	HEADWALLS WINGWALL
3	3	16.184	0.401	41.355	5'-10"	6	5'-6"	1.038	33.044	1.042	33.044	A
3	4	17.596	0.450	46.606	5'-10"	6	5'-6"	1.131	33.044	1.134	33.044	C
4	3	19.524	0.448	69.319	6'-10"	6	6'-6"	1.139	39.052	1.146	39.052	A
4	4	20.936	0.497	69.842	6'-10"	6	6'-6"	1.232	39.052	1.239	39.052	C
4	5	22.348	0.546	77.408	6'-10"	6	6'-6"	1.324	39.052	1.332	39.052	E
4	6	23.760	0.595	87.946	6'-10"	6	6'-6"	1.417	39.052	1.424	39.052	G
5	3	22.864	0.555	85.770	7'-10"	6	7'-6"	1.259	45.060	1.269	45.060	B
5	4	24.276	0.614	81.559	7'-10"	6	7'-6"	1.352	45.060	1.362	45.060	D
5	5	25.688	0.663	86.403	7'-10"	6	7'-6"	1.444	45.060	1.455	45.060	F
5	6	27.100	0.712	96.716	7'-10"	6	7'-6"	1.537	45.060	1.547	45.060	H
5	7	28.512	0.760	109.922	7'-10"	6	7'-6"	1.630	45.060	1.640	45.060	J
6	4	27.616	0.752	100.722	8'-10"	6	8'-6"	1.442	51.068	1.456	51.068	D
6	5	29.028	0.801	111.159	8'-10"	6	8'-6"	1.535	51.068	1.548	51.068	F
6	6	30.440	0.850	116.466	8'-10"	6	8'-6"	1.627	51.068	1.641	51.068	H
6	7	31.852	0.898	128.210	8'-10"	6	8'-6"	1.720	51.068	1.734	51.068	J
6	8	33.264	0.946	147.176	8'-10"	6	8'-6"	1.813	51.068	1.827	51.068	L
7	4	30.956	0.898	125.975	9'-10"	6	9'-6"	1.523	57.076	1.540	57.076	D
7	6	33.780	0.994	167.916	9'-10"	6	9'-6"	1.708	57.076	1.726	57.076	H
7	8	36.604	1.091	188.876	9'-10"	6	9'-6"	1.894	57.076	1.911	57.076	L
7	10	39.428	1.261	241.896	9'-10"	6	9'-6"	2.079	57.076	2.096	57.076	P
8	4	34.296	1.017	180.750	10'-10"	6	10'-6"	1.602	63.084	1.622	63.084	D
8	6	37.120	1.117	168.456	10'-10"	6	10'-6"	1.787	63.084	1.808	63.084	H
8	8	39.944	1.212	226.032	10'-10"	6	10'-6"	1.973	63.084	1.993	63.084	L
8	10	42.768	1.407	260.099	10'-10"	6	10'-6"	2.160	63.084	2.181	63.084	P
9	4	37.636	1.197	198.733	11'-10"	6	11'-6"	1.685	69.092	1.709	69.092	E
9	6	40.460	1.312	192.297	11'-10"	6	11'-6"	1.868	69.092	1.891	69.092	I
9	8	43.284	1.407	234.542	11'-10"	6	11'-6"	2.053	69.092	2.077	69.092	M
9	10	46.108	1.579	293.978	11'-10"	6	11'-6"	2.239	69.092	2.262	69.092	Q
9	12	48.932	1.846	389.542	11'-10"	6	11'-6"	2.383	69.092	2.406	69.092	U
10	4	40.976	1.410	236.138	12'-10"	6	12'-6"	1.737	75.100	1.764	75.100	E
10	6	43.800	1.527	228.503	12'-10"	6	12'-6"	1.919	75.100	1.946	75.100	I
10	8	46.624	1.624	258.918	12'-10"	6	12'-6"	2.104	75.100	2.131	75.100	M
10	10	49.448	1.795	349.512	12'-10"	6	12'-6"	2.290	75.100	2.317	75.100	Q
10	12	52.272	2.066	413.087	12'-10"	6	12'-6"	2.411	75.100	2.437	75.100	U
12	6	50.480	1.921	279.204	14'-10"	6	14'-6"	2.015	87.116	2.049	87.116	I
12	8	53.304	2.058	318.713	14'-10"	6	14'-6"	2.190	87.116	2.224	87.116	M
12	10	56.128	2.210	436.661	14'-10"	6	14'-6"	2.370	87.116	2.404	87.116	Q
12	12	58.952	2.548	488.548	14'-10"	6	14'-6"	2.485	87.116	2.518	87.116	U

A COPY OF THE ORIGINAL SEALED AND SIGNED DRAWING IS ON FILE IN THE CENTRAL OFFICE

SPECIFICATION REFERENCE

SINGLE BOX CULVERTS

20 TO 30 FT. FILLS

VIRGINIA DEPARTMENT OF TRANSPORTATION

VDOT

ROAD AND BRIDGE STANDARDS

REVISION DATE 07/11

SHEET 2 OF 2

1002.12

BCS-40

FOR TYPICAL SECTION, NOTES AND OTHER DETAILS, REFER TO STANDARD BCS-DT.

DIMENSIONS					REINFORCING STEEL																						
SPAN	HGHT	T1	T2	T3							BH1					BH2			BH3				BV1				
(FT.)	(FT.)	TOP SLAB (IN.)	BOTTOM SLAB (IN.)	WALL (IN.)	A	B	C	D	E	F	SIZE	SPACING C-C	a	b	LENGTH	SIZE	SPACING C-C	LENGTH	SIZE	SPACING C-C	a	LENGTH	SIZE	SPACING C-C	LENGTH	NO. BL1 #4 BARS	NO. BL2 #3 BARS
3	3	8"	8"	8"	2	2'-0"	2	2'-0"	1	1'-0"	4	9"	4'-0"	2'-8"	8'-10"	5	9"	4'-0"	3	9"	2'-2"	4'-1"	4	12"	4'-0"	16	8
3	4	8"	8"	8"	2	2'-0"	2	2'-0"	2	2'-0"	4	9"	4'-0"	3'-2"	9'-10"	5	9"	4'-0"	--	---	-----	-----	4	12"	5'-0"	16	12
4	3	9¼"	9¼"	8"	3	3'-0"	3	3'-0"	1	1'-0"	4	9"	5'-0"	2'-10"	10'-1"	6	9"	5'-0"	--	---	-----	-----	4	12"	4'-2"	20	8
4	4	9"	9"	8"	3	3'-0"	3	3'-0"	2	2'-0"	4	8½"	5'-0"	3'-3"	11'-0"	6	8½"	5'-0"	--	---	-----	-----	4	12"	5'-2"	20	12
4	5	9"	9"	8"	3	3'-0"	3	3'-0"	3	3'-0"	4	8½"	5'-0"	3'-9"	12'-0"	6	8½"	5'-0"	--	---	-----	-----	4	12"	6'-2"	20	16
4	6	9¼"	9¼"	8"	3	3'-0"	3	3'-0"	4	4'-0"	4	8½"	5'-0"	4'-4"	13'-1"	6	8½"	5'-0"	--	---	-----	-----	6	12"	7'-2"	20	20
5	3	11¾"	11¾"	8"	4	4'-0"	4	4'-0"	1	1'-0"	4	7½"	6'-0"	3'-0"	11'-6"	6	7½"	6'-0"	--	---	-----	-----	4	11½"	4'-7"	24	8
5	4	11¾"	11¾"	8"	4	4'-0"	4	4'-0"	2	2'-0"	4	7"	6'-0"	3'-6"	12'-6"	6	7"	6'-0"	--	---	-----	-----	4	12"	5'-7"	24	12
5	5	12"	12"	8"	4	4'-0"	4	4'-0"	3	3'-0"	4	7"	6'-0"	4'-0"	13'-6"	6	7"	6'-0"	--	---	-----	-----	4	12"	6'-8"	24	16
5	6	12"	12"	8"	4	4'-0"	4	4'-0"	4	4'-0"	4	7"	6'-0"	4'-6"	14'-6"	6	7"	6'-0"	--	---	-----	-----	5	12"	7'-8"	24	20
5	7	11¼"	11¼"	8"	4	4'-0"	4	4'-0"	5	5'-0"	4	7"	6'-0"	5'-0"	15'-5"	6	7"	6'-0"	--	---	-----	-----	6	10½"	8'-6"	24	24
6	4	13"	13"	8"	5	5'-0"	5	5'-0"	2	2'-0"	4	6"	7'-0"	3'-7"	13'-8"	6	6"	7'-0"	--	---	-----	-----	4	12"	5'-10"	28	12
6	5	13"	13"	8"	5	5'-0"	5	5'-0"	3	3'-0"	4	6"	7'-0"	4'-1"	14'-8"	6	6"	7'-0"	--	---	-----	-----	4	12"	6'-10"	28	16
6	6	13"	13"	8"	5	5'-0"	5	5'-0"	4	4'-0"	4	6"	7'-0"	4'-7"	15'-8"	6	6"	7'-0"	--	---	-----	-----	5	12"	7'-10"	28	20
6	7	13"	13"	8"	5	5'-0"	5	5'-0"	5	5'-0"	4	6"	7'-0"	5'-2"	16'-8"	6	6"	7'-0"	--	---	-----	-----	6	12"	8'-10"	28	24
6	8	13"	13"	8½"	5	5'-0"	5	5'-0"	6	6'-0"	4	6"	7'-1"	5'-8"	17'-9"	6	6"	7'-1"	--	---	-----	-----	6	10½"	9'-10"	28	28
7	4	14¾"	14¾"	8"	6	6'-0"	6	6'-0"	2	2'-0"	4	5"	8'-0"	3'-9"	15'-0"	6	5"	8'-0"	--	---	-----	-----	4	12"	6'-1"	32	12
7	6	14¾"	14¾"	8"	6	6'-0"	6	6'-0"	4	4'-0"	4	5"	8'-0"	4'-9"	17'-0"	6	5"	8'-0"	--	---	-----	-----	5	12"	8'-1"	32	20
7	8	14¾"	14¾"	8"	6	6'-0"	6	6'-0"	6	6'-0"	4	5"	8'-0"	5'-9"	19'-0"	6	5"	8'-0"	--	---	-----	-----	5	7½"	10'-1"	32	28
7	10	14½"	14½"	10½"	6	6'-0"	6	6'-0"	8	8'-0"	6	8"	8'-5"	7'-1"	21'-9"	8	8"	8'-4"	--	---	-----	-----	6	7"	12'-1"	32	36
8	4	17"	17"	8"	7	7'-0"	7	7'-0"	2	2'-0"	4	6"	9'-0"	3'-11"	16'-4"	7	6"	9'-0"	--	---	-----	-----	4	12"	6'-6"	36	12
8	6	17¼"	17¼"	8"	7	7'-0"	7	7'-0"	4	4'-0"	4	6"	9'-0"	5'-0"	18'-5"	7	6"	9'-0"	--	---	-----	-----	5	12"	8'-6"	36	20
8	8	17¼"	17¼"	8"	7	7'-0"	7	7'-0"	6	6'-0"	5	6"	9'-0"	6'-2"	20'-7"	7	6"	9'-0"	--	---	-----	-----	5	7"	10'-6"	36	28
8	10	17"	17"	10½"	7	7'-0"	7	7'-0"	8	8'-0"	6	7½"	9'-5"	7'-3"	23'-2"	8	7½"	9'-4"	--	---	-----	-----	6	7"	12'-5"	36	36
9	4	18¾"	18¾"	8"	8	8'-0"	8	8'-0"	2	2'-0"	4	5½"	10'-0"	4'-1"	17'-8"	7	5½"	10'-0"	--	---	-----	-----	4	12"	6'-9"	40	12
9	6	18¾"	18¾"	8"	8	8'-0"	8	8'-0"	4	4'-0"	4	5½"	10'-0"	5'-1"	19'-8"	7	5½"	10'-0"	--	---	-----	-----	4	12"	8'-9"	40	20
9	8	18¾"	18¾"	8"	8	8'-0"	8	8'-0"	6	6'-0"	4	5½"	10'-0"	6'-1"	21'-8"	7	5½"	10'-0"	--	---	-----	-----	5	7½"	10'-9"	40	28
9	10	18½"	18½"	10"	8	8'-0"	8	8'-0"	8	8'-0"	6	7"	10'-4"	7'-5"	24'-4"	8	7"	10'-3"	--	---	-----	-----	5	4½"	12'-8"	40	36
9	12	18½"	18½"	12½"	8	8'-0"	8	8'-0"	10	10'-0"	7	7"	10'-9"	8'-8"	27'-1"	8	7"	10'-9"	--	---	-----	-----	6	6"	14'-8"	40	44
10	4	20"	20"	8"	9	9'-0"	9	9'-0"	2	2'-0"	5	6½"	11'-0"	4'-5"	19'-1"	8	6½"	11'-0"	--	---	-----	-----	4	11"	7'-0"	44	12
10	6	20¼"	20¼"	8"	9	9'-0"	9	9'-0"	4	4'-0"	5	6½"	11'-0"	5'-5"	21'-1"	8	6½"	11'-0"	--	---	-----	-----	4	12"	9'-0"	44	20
10	8	20½"	20½"	8"	9	9'-0"	9	9'-0"	6	6'-0"	5	6"	11'-0"	6'-5"	23'-2"	8	6"	11'-0"	--	---	-----	-----	5	7½"	11'-1"	44	28
10	10	20¾"	20¾"	9½"	9	9'-0"	9	9'-0"	8	8'-0"	6	6"	11'-3"	7'-7"	25'-7"	8	6"	11'-3"	--	---	-----	-----	5	4½"	13'-1"	44	36
10	12	20½"	20½"	12½"	9	9'-0"	9	9'-0"	10	10'-0"	6	5½"	11'-9"	8'-7"	28'-1"	8	5½"	11'-9"	--	---	-----	-----	6	6"	15'-1"	44	44
12	6	23¼"	23¼"	8"	11	11'-0"	11	11'-0"	4	4'-0"	5	5½"	13'-0"	5'-8"	23'-7"	8	5½"	13'-0"	--	---	-----	-----	4	9½"	9'-6"	52	20
12	8	23¼"	23¼"	8"	11	11'-0"	11	11'-0"	6	6'-0"	5	5½"	13'-0"	6'-8"	25'-7"	8	5½"	13'-0"	--	---	-----	-----	5	8"	11'-6"	52	28
12	10	23"	23"	9½"	11	11'-0"	11	11'-0"	8	8'-0"	5	5"	13'-3"	7'-7"	27'-10"	8	5"	13'-3"	--	---	-----	-----	5	5"	13'-5"	52	36
12	12	22¾"	22¾"	12"	11	11'-0"	11	11'-0"	10	10'-0"	6	5"	13'-8"	8'-10"	30'-6"	8	5"	13'-7"	--	---	-----	-----	7	9½"	15'-7"	52	44

A COPY OF THE ORIGINAL SEALED AND SIGNED DRAWING IS ON FILE IN THE CENTRAL OFFICE

VDOT
ROAD AND BRIDGE STANDARDS

SHEET 1 OF 2 | REVISION DATE
1002.13 | 07/11

SINGLE BOX CULVERTS

30 TO 40 FT. FILLS

VIRGINIA DEPARTMENT OF TRANSPORTATION

SPECIFICATION REFERENCE

FOR TYPICAL SECTION, NOTES AND OTHER DETAILS, REFER TO STANDARD BCS-DT.

SPAN (FT.)	HGHT (FT.)	REINFORCING STEEL (LBS/LONG. JT)	QUAN./LF CONCRETE CLASS A4 (CY/LF)	QUAN./LF REINFORCING STEEL (LBS/LF)	HEADWALLS G HEADWALL LENGTH	HEADWALLS HWI SIZE	HEADWALLS HWI LENGTH	HEADWALLS INLET CONCRETE CL. A4 (CY)	HEADWALLS INLET REINFORCING STEEL (LBS)	HEADWALLS OUTLET CONCRETE CL. A4 (CY)	HEADWALLS OUTLET REINFORCING STEEL (LBS)	HEADWALLS WINGWALL
3	3	16.184	0.400	55.206	5'-10"	6	5'-6"	1.038	33.044	1.042	33.044	A
3	4	17.596	0.449	51.804	5'-10"	6	5'-6"	1.131	33.044	1.134	33.044	C
4	3	19.524	0.490	61.854	6'-10"	6	6'-6"	1.161	39.052	1.169	39.052	B
4	4	20.936	0.530	68.673	6'-10"	6	6'-6"	1.235	39.052	1.242	39.052	C
4	5	22.348	0.579	73.399	6'-10"	6	6'-6"	1.328	39.052	1.335	39.052	E
4	6	23.760	0.636	90.283	6'-10"	6	6'-6"	1.440	39.052	1.447	39.052	H
5	3	22.864	0.643	81.426	7'-10"	6	7'-6"	1.259	45.060	1.269	45.060	B
5	4	24.276	0.692	90.093	7'-10"	6	7'-6"	1.352	45.060	1.362	45.060	D
5	5	25.688	0.750	95.374	7'-10"	6	7'-6"	1.444	45.060	1.455	45.060	F
5	6	27.100	0.799	106.254	7'-10"	6	7'-6"	1.537	45.060	1.547	45.060	H
5	7	28.512	0.818	123.095	7'-10"	6	7'-6"	1.630	45.060	1.640	45.060	J
6	4	27.616	0.819	112.841	8'-10"	6	8'-6"	1.437	51.068	1.451	51.068	D
6	5	29.028	0.868	118.353	8'-10"	6	8'-6"	1.530	51.068	1.544	51.068	F
6	6	30.440	0.916	129.740	8'-10"	6	8'-6"	1.623	51.068	1.636	51.068	H
6	7	31.852	0.965	144.111	8'-10"	6	8'-6"	1.715	51.068	1.729	51.068	J
6	8	33.264	1.045	156.235	8'-10"	6	8'-6"	1.808	51.068	1.822	51.068	L
7	4	30.956	0.987	143.621	9'-10"	6	9'-6"	1.512	57.076	1.529	57.076	D
7	6	33.780	1.084	161.807	9'-10"	6	9'-6"	1.698	57.076	1.715	57.076	H
7	8	36.604	1.181	188.072	9'-10"	6	9'-6"	1.883	57.076	1.900	57.076	L
7	10	39.428	1.453	266.363	9'-10"	6	9'-6"	2.032	57.076	2.049	57.076	P
8	4	34.296	1.206	159.065	10'-10"	6	10'-6"	1.590	63.084	1.611	63.084	E
8	6	37.120	1.318	176.663	10'-10"	6	10'-6"	1.773	63.084	1.794	63.084	I
8	8	39.944	1.412	236.248	10'-10"	6	10'-6"	1.959	63.084	1.979	63.084	M
8	10	42.768	1.690	298.216	10'-10"	6	10'-6"	2.107	63.084	2.127	63.084	Q
9	4	37.636	1.421	186.129	11'-10"	6	11'-6"	1.642	69.092	1.666	69.092	E
9	6	40.460	1.519	197.639	11'-10"	6	11'-6"	1.828	69.092	1.851	69.092	I
9	8	43.284	1.615	230.749	11'-10"	6	11'-6"	2.013	69.092	2.037	69.092	M
9	10	46.108	1.851	336.193	11'-10"	6	11'-6"	2.162	69.092	2.185	69.092	Q
9	12	48.932	2.201	425.353	11'-10"	6	11'-6"	2.202	69.092	2.224	69.092	U
10	4	40.976	1.621	231.746	12'-10"	6	12'-6"	1.691	75.100	1.718	75.100	E
10	6	43.800	1.736	244.494	12'-10"	6	12'-6"	1.872	75.100	1.899	75.100	I
10	8	46.624	1.848	296.723	12'-10"	6	12'-6"	2.054	75.100	2.081	75.100	M
10	10	49.448	2.081	395.781	12'-10"	6	12'-6"	2.194	75.100	2.221	75.100	Q
10	12	52.272	2.461	463.231	12'-10"	6	12'-6"	2.236	75.100	2.262	75.100	U
12	6	50.480	2.227	324.329	14'-10"	6	14'-6"	1.953	87.116	1.987	87.116	J
12	8	53.304	2.323	356.451	14'-10"	6	14'-6"	2.138	87.116	2.172	87.116	N
12	10	56.128	2.523	431.964	14'-10"	6	14'-6"	2.287	87.116	2.320	87.116	R
12	12	58.952	2.942	534.328	14'-10"	6	14'-6"	2.327	87.116	2.359	87.116	V

A COPY OF THE ORIGINAL SEALED AND SIGNED DRAWING IS ON FILE IN THE CENTRAL OFFICE

SPECIFICATION REFERENCE

SINGLE BOX CULVERTS

30 TO 40 FT. FILLS

VIRGINIA DEPARTMENT OF TRANSPORTATION

VDOT

ROAD AND BRIDGE STANDARDS

REVISION DATE 07/11

SHEET 2 OF 2

1002.14

BCS-50

FOR TYPICAL SECTION, NOTES AND OTHER DETAILS, REFER TO STANDARD BCS-DT.

DIMENSIONS					REINFORCING STEEL																						
SPAN	HGHT	T1	T2	T3							BH1					BH2			BH3				BV1				
(FT.)	(FT.)	TOP SLAB (IN.)	BOTTOM SLAB (IN.)	WALL (IN.)	A	B	C	D	E	F	SIZE	SPACING C-C	a	b	LENGTH	SIZE	SPACING C-C	LENGTH	SIZE	SPACING C-C	a	LENGTH	SIZE	SPACING C-C	LENGTH	NO. BL1 #4 BARS	NO. BL2 #3 BARS
3	3	8"	8"	8"	2	2'- 0"	2	2'- 0"	1	1'- 0"	4	6"	4'- 0"	2'- 8"	8'-10"	6	10"	4'- 0"	4	10"	2'- 1¼"	3'-11"	4	12"	4'- 0"	16	8
3	4	8"	8"	8"	2	2'- 0"	2	2'- 0"	2	2'- 0"	4	6"	4'- 0"	3'- 2"	9'-10"	6	10"	4'- 0"	4	10"	2'- 1¼"	3'-11"	4	12"	5'- 0"	16	12
4	3	10¼"	10¼"	8"	3	3'- 0"	3	3'- 0"	1	1'- 0"	5	8½"	5'- 0"	2'-10¼"	10'- 2"	6	8"	5'- 0"	--	---	-----	-----	4	12"	4'- 5"	20	8
4	4	10¼"	10¼"	8"	3	3'- 0"	3	3'- 0"	2	2'- 0"	4	7"	5'- 0"	3'- 4"	11'- 2"	6	7½"	5'- 0"	--	---	-----	-----	4	12"	5'- 4"	20	12
4	5	10¼"	10¼"	8"	3	3'- 0"	3	3'- 0"	3	3'- 0"	4	8"	5'- 0"	3'-10¼"	12'- 2"	6	8"	5'- 0"	--	---	-----	-----	5	12"	6'- 5"	20	16
4	6	10¼"	10¼"	10"	3	3'- 0"	3	3'- 0"	4	4'- 0"	4	8"	5'- 0"	4'- 4¼"	13'- 2"	6	8"	5'- 0"	--	---	-----	-----	5	12"	7'- 5"	20	20
5	3	13"	13"	8"	4	4'- 0"	4	4'- 0"	1	1'- 0"	4	6½"	6'- 0"	3'- 1"	11'- 8"	6	6½"	6'- 0"	--	---	-----	-----	4	12"	4'-10"	24	8
5	4	13"	13"	8"	4	4'- 0"	4	4'- 0"	2	2'- 0"	4	6½"	6'- 0"	3'- 7"	12'- 8"	6	6½"	6'- 0"	--	---	-----	-----	4	12"	5'-10"	24	12
5	5	13"	13"	8"	4	4'- 0"	4	4'- 0"	3	3'- 0"	4	6½"	6'- 0"	4'- 1"	13'- 8"	6	6½"	6'- 0"	--	---	-----	-----	5	12"	6'-10"	24	16
5	6	12¼"	12¼"	8"	4	4'- 0"	4	4'- 0"	4	4'- 0"	4	6"	6'- 0"	4'- 6¼"	14'- 6"	6	6"	6'- 0"	--	---	-----	-----	5	10"	7'- 9"	24	20
5	7	12¼"	12¼"	10"	4	4'- 0"	4	4'- 0"	5	5'- 0"	4	6½"	6'- 0"	5'- ¼"	15'- 6"	6	6½"	6'- 0"	--	---	-----	-----	5	8"	8'- 9"	24	24
6	4	14½"	14½"	8"	5	5'- 0"	5	5'- 0"	2	2'- 0"	4	9"	7'- 0"	3'- 8½"	13'-11"	8	9"	7'- 0"	3	9"	2'- 8⅜"	5'- 2"	4	12"	6'- 1"	28	12
6	5	14½"	14½"	8"	5	5'- 0"	5	5'- 0"	3	3'- 0"	4	5"	7'- 0"	4'- 2½"	14'-11"	6	5"	7'- 0"	--	---	-----	-----	4	12"	7'- 1"	28	16
6	6	14¾"	14¾"	8¾"	5	5'- 0"	5	5'- 0"	4	4'- 0"	5	9"	7'- 0"	4'- 8¾"	15'-11"	8	9"	7'- 0"	3	9"	3'- 3"	6'- 4"	5	10"	8'- 1"	28	20
6	7	14¾"	14¾"	8"	5	5'- 0"	5	5'- 0"	5	5'- 0"	5	8½"	7'- 0"	5'- 2¾"	16'-10"	8	8½"	7'- 0"	3	8½"	3'- 6"	6'-10"	5	6"	9'- 1"	28	24
6	8	14½"	14½"	10"	5	5'- 0"	5	5'- 0"	6	6'- 0"	5	8½"	7'- 0"	5'- 8½"	17'- 9"	8	8½"	7'- 0"	3	8½"	3'- 8"	7'- 2"	5	6"	10'- 1"	28	28
7	4	17½"	17½"	8"	6	6'- 0"	6	6'- 0"	2	2'- 0"	5	8"	8'- 0"	3'-11½"	15'- 3"	8	8"	8'- 0"	--	---	-----	-----	4	12"	6'- 7"	32	12
7	6	17¾"	17¾"	8"	6	6'- 0"	6	6'- 0"	4	4'- 0"	5	8"	8'- 0"	4'-11¾"	17'- 5"	8	8"	8'- 0"	4	8"	2'-10¾"	5'- 6"	5	10"	8'- 7"	32	20
7	8	17½"	17½"	8¾"	6	6'- 0"	6	6'- 0"	6	6'- 0"	5	8"	8'- 0"	5'-11½"	19'- 3"	8	8"	8'- 0"	3	8"	3'-11"	7'- 7"	5	6"	10'- 7"	32	28
7	10	17½"	17½"	12"	6	6'- 0"	6	6'- 0"	8	8'- 0"	5	8"	8'- 0"	6'-11½"	21'- 3"	8	8"	8'- 0"	3	8"	4'- 4"	8'- 7"	7	9"	12'- 7"	32	36
8	4	18¼"	18¼"	8"	7	7'- 0"	7	7'- 0"	2	2'- 0"	5	5½"	9'- 0"	4'- ¼"	16'- 6"	7	5½"	9'- 0"	--	---	-----	-----	4	12"	6'- 9"	36	12
8	6	18½"	18½"	8"	7	7'- 0"	7	7'- 0"	4	4'- 0"	4	5½"	9'- 0"	5'- ½"	18'- 7"	7	5½"	9'- 0"	--	---	-----	-----	5	12"	8'- 9"	36	20
8	8	18¾"	18¾"	9"	7	7'- 0"	7	7'- 0"	6	6'- 0"	5	5½"	9'- 0"	6'- ¾"	20'- 6"	7	5½"	9'- 0"	--	---	-----	-----	5	5½"	10'- 9"	36	28
8	10	19"	19"	12"	7	7'- 0"	7	7'- 0"	8	8'- 0"	5	5½"	9'- 3½"	7'- 1"	22'-10"	7	5½"	9'- 3"	--	---	-----	-----	5	6"	12'-10"	36	36
9	4	20"	20"	8"	8	8'- 0"	8	8'- 0"	2	2'- 0"	5	6½"	10'- 0"	4'- 2"	17'- 8"	8	6½"	10'- 0"	--	---	-----	-----	4	12"	7'- 0"	40	12
9	6	20½"	20½"	8"	8	8'- 0"	8	8'- 0"	4	4'- 0"	5	6½"	10'- 0"	5'- 2½"	19'- 9"	8	6½"	10'- 0"	--	---	-----	-----	5	12"	9'- 1"	40	20
9	8	20¾"	20¾"	8½"	8	8'- 0"	8	8'- 0"	6	6'- 0"	5	6"	10'- 0"	6'- 2¾"	21'-10"	8	6"	10'- 0"	--	---	-----	-----	6	8"	11'- 1"	40	28
9	10	20¾"	20¾"	12"	8	8'- 0"	8	8'- 0"	8	8'- 0"	6	6½"	10'- 3½"	**7'- 6¼"**	24'- 7"	8	6½"	10'- 3"	--	---	-----	-----	5	6"	13'- 1"	40	36
9	12	21"	21"	14"	8	8'- 0"	8	8'- 0"	10	10'- 0"	6	5½"	10'- 6½"	8'- 6½"	26'-10"	8	5½"	10'- 6"	--	---	-----	-----	7	8"	15'- 2"	40	44
10	4	22½"	22½"	8"	9	9'- 0"	9	9'- 0"	2	2'- 0"	5	6"	11'- 0"	4'- 4½"	19'- 3"	8	6"	11'- 0"	--	---	-----	-----	4	12"	7'- 5"	44	12
10	6	22¼"	22¼"	8"	9	9'- 0"	9	9'- 0"	4	4'- 0"	5	6"	11'- 0"	5'- 4¼"	21'- 2"	8	6"	11'- 0"	--	---	-----	-----	5	12"	9'- 4"	44	20
10	8	22¼"	22¼"	8"	9	9'- 0"	9	9'- 0"	6	6'- 0"	5	6"	11'- 0"	6'- 4¼"	23'- 1"	8	6"	11'- 0"	--	---	-----	-----	5	5½"	11'- 4"	44	28
10	10	22"	22"	12"	9	9'- 0"	9	9'- 0"	8	8'- 0"	5	5½"	11'- 3½"	7'- 4"	25'- 4"	8	5½"	11'- 3"	--	---	-----	-----	5	5"	13'- 4"	44	36
10	12	22"	22"	14"	9	9'- 0"	9	9'- 0"	10	10'- 0"	7	5½"	11'- 6½"	8'-11"	28'- 5"	8	5½"	11'- 6"	--	---	-----	-----	6	6"	15'- 4"	44	44
12	6	27½"	27½"	8½"	11	11'- 0"	11	11'- 0"	4	4'- 0"	4	5"	13'- 1"	5'- 9½"	24'- 2"	8	5"	13'- 1"	--	---	-----	-----	5	12"	10'- 3"	52	20
12	8	27½"	27½"	8"	11	11'- 0"	11	11'- 0"	6	6'- 0"	5	5"	13'- 0"	6'-11½"	26'- 3"	8	5"	13'- 0"	--	---	-----	-----	6	7"	12'- 3"	52	28
12	10	27½"	27½"	12"	11	11'- 0"	11	11'- 0"	8	8'- 0"	5	4½"	13'- 3½"	7'-11½"	28'- 7"	8	4½"	13'- 3"	--	---	-----	-----	7	9½"	14'- 3"	52	36
12	12	27½"	27½"	14"	11	11'- 0"	11	11'- 0"	10	10'- 0"	6	4½"	13'- 6½"	9'- 1"	31'- 0"	8	4½"	13'- 6"	--	---	-----	-----	7	8"	16'- 3"	52	44

A COPY OF THE ORIGINAL SEALED AND SIGNED DRAWING IS ON FILE IN THE CENTRAL OFFICE.

VDOT
ROAD AND BRIDGE STANDARDS

SHEET 1 OF 2 | REVISION DATE
1002.15 | 07/11

SINGLE BOX CULVERTS

40 TO 50 FT. FILLS

VIRGINIA DEPARTMENT OF TRANSPORTATION

SPECIFICATION REFERENCE

FOR TYPICAL SECTION, NOTES AND OTHER DETAILS, REFER TO STANDARD BCS-DT.

SPAN (FT.)	HGHT (FT.)	REINFORCING STEEL (LBS/LONG. JT)	QUAN./LF CONCRETE CLASS A4 (CY/LF)	QUAN./LF REINFORCING STEEL (LBS/LF)	HEADWALLS G HEADWALL LENGTH	HEADWALLS HW I SIZE	HEADWALLS HW I LENGTH	INLET CONCRETE CL. A4 (CY)	INLET REINFORCING STEEL (LBS)	OUTLET CONCRETE CL. A4 (CY)	OUTLET REINFORCING STEEL (LBS)	WINGWALL
3	3	16.184	0.399	68.962	5'-10"	6	5'- 6"	1.038	33.044	1.042	33.044	A
3	4	17.596	0.448	74.625	5'-10"	6	5'- 6"	1.131	33.044	1.134	33.044	C
4	3	19.524	0.522	76.100	6'-10"	6	6'- 6"	1.165	39.052	1.172	39.052	B
4	4	20.936	0.571	75.683	6'-10"	6	6'- 6"	1.257	39.052	1.264	39.052	D
4	5	22.348	0.620	81.181	6'-10"	6	6'- 6"	1.350	39.052	1.357	39.052	F
4	6	23.760	0.764	86.910	6'-10"	6	6'- 6"	1.443	39.052	1.450	39.052	H
5	3	22.864	0.691	87.548	7'-10"	6	7'- 6"	1.259	45.060	1.269	45.060	B
5	4	24.276	0.740	92.854	7'-10"	6	7'- 6"	1.352	45.060	1.362	45.060	D
5	5	25.688	0.789	104.834	7'-10"	6	7'- 6"	1.444	45.060	1.455	45.060	F
5	6	27.100	0.808	119.650	7'-10"	6	7'- 6"	1.537	45.060	1.547	45.060	H
5	7	28.512	0.968	126.150	7'-10"	6	7'- 6"	1.630	45.060	1.640	45.060	J
6	4	27.616	0.887	116.334	8'-10"	6	8'- 6"	1.433	51.068	1.446	51.068	D
6	5	29.028	0.935	132.479	8'-10"	6	8'- 6"	1.525	51.068	1.539	51.068	F
6	6	30.440	1.038	155.252	8'-10"	6	8'- 6"	1.617	51.068	1.631	51.068	H
6	7	31.852	1.041	186.084	8'-10"	6	8'- 6"	1.710	51.068	1.724	51.068	J
6	8	33.264	1.207	195.354	8'-10"	6	8'- 6"	1.804	51.068	1.817	51.068	L
7	4	30.956	1.128	146.481	9'-10"	6	9'- 6"	1.514	57.076	1.531	57.076	E
7	6	33.780	1.236	194.910	9'-10"	6	9'- 6"	1.698	57.076	1.715	57.076	I
7	8	36.604	1.371	222.064	9'-10"	6	9'- 6"	1.885	57.076	1.902	57.076	M
7	10	39.428	1.735	257.787	9'-10"	6	9'- 6"	2.070	57.076	2.087	57.076	Q
8	4	34.296	1.276	195.772	10'-10"	6	10'- 6"	1.579	63.084	1.599	63.084	E
8	6	37.120	1.390	187.491	10'-10"	6	10'- 6"	1.762	63.084	1.782	63.084	I
8	8	39.944	1.566	261.160	10'-10"	6	10'- 6"	1.945	63.084	1.965	63.084	M
8	10	42.768	1.934	281.746	10'-10"	6	10'- 6"	1.987	63.084	2.006	63.084	Q
9	4	37.636	1.499	207.204	11'-10"	6	11'- 6"	1.627	69.092	1.650	69.092	E
9	6	40.460	1.628	231.090	11'-10"	6	11'- 6"	1.806	69.092	1.830	69.092	I
9	8	43.284	1.774	288.545	11'-10"	6	11'- 6"	1.988	69.092	2.012	69.092	M
9	10	46.108	2.166	334.834	11'-10"	6	11'- 6"	2.030	69.092	2.052	69.092	Q
9	12	48.932	2.515	436.543	11'-10"	6	11'- 6"	2.048	69.092	2.069	69.092	U
10	4	40.976	1.795	245.200	12'-10"	6	12'- 6"	1.671	75.100	1.698	75.100	F
10	6	43.800	1.874	266.040	12'-10"	6	12'- 6"	1.860	75.100	1.887	75.100	J
10	8	46.624	1.970	310.043	12'-10"	6	12'- 6"	2.046	75.100	2.073	75.100	N
10	10	49.448	2.385	361.147	12'-10"	6	12'- 6"	2.089	75.100	2.114	75.100	R
10	12	52.272	2.714	528.019	12'-10"	6	12'- 6"	2.109	75.100	2.133	75.100	V
12	6	50.480	2.610	314.113	14'-10"	6	14'- 6"	1.847	87.116	1.881	87.116	K
12	8	53.304	2.668	410.348	14'-10"	6	14'- 6"	2.065	87.116	2.099	87.116	O
12	10	56.128	3.123	476.112	14'-10"	6	14'- 6"	2.094	87.116	2.127	87.116	S
12	12	58.952	3.467	594.069	14'-10"	6	14'- 6"	2.106	87.116	2.137	87.116	W

A COPY OF THE ORIGINAL SEALED AND SIGNED DRAWING IS ON FILE IN THE CENTRAL OFFICE.

SPECIFICATION REFERENCE

SINGLE BOX CULVERTS

40 TO 50 FT. FILLS

VIRGINIA DEPARTMENT OF TRANSPORTATION

VDOT

ROAD AND BRIDGE STANDARDS

REVISION DATE 07/11

SHEET 2 OF 2

1002.16

BCD-DT

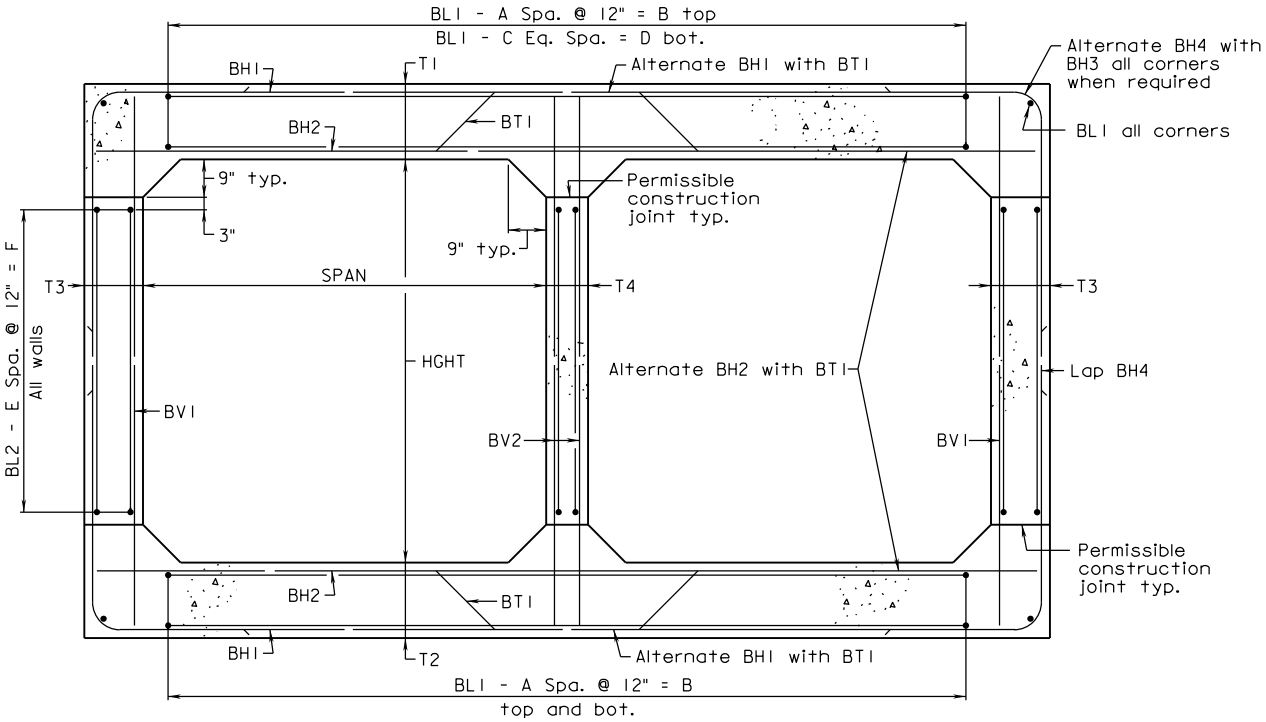

TYPICAL SECTION

A COPY OF THE ORIGINAL SEALED AND SIGNED DRAWING IS ON FILE IN THE CENTRAL OFFICE.

VDOT ROAD AND BRIDGE STANDARDS	DOUBLE BOX CULVERTS	SPECIFICATION REFERENCE
SHEET 1 OF 3	STANDARD DETAILS	
REVISION DATE	VIRGINIA DEPARTMENT OF TRANSPORTATION	
1003.01 07/11		

GENERAL NOTE

Capacity: AASHTO HI-93 Loading.

Specifications:

Construction - Va. Department of Transportation Road and Bridge Specifications.

Design - AASHTO LRFD Bridge Design Specifications, 5th Edition 2010; 2011 Interim Specifications; and VDOT Modifications.

All concrete shall be Class A4.

Deformed reinforcing bars shall conform to ASTM A615, Grade 60. All reinforcing bar dimensions on the detailed drawings are to centers of bars except where otherwise noted and are subject to fabrication and construction tolerances.

Construction joints shall be constructed and bonded in accordance with the current Road and Bridge Specifications.

Barrels more than 35' in length shall be poured in sections by providing vertical construction joints, not exceeding 25' between joints nor more than 30' from ends of barrels.

** All bends shall be made with a pin diameter as listed in TABLE A except for Bars BH3 and BH4 which shall have a pin diameter of 24 bar diameters.

Dimensions on bar diagrams are out-to-out of bars. Bars are straight and #4 size unless otherwise shown. BL2 shall be #3 size.

The number of BL1 and BL2 bars shown in the table is the number of longitudinal bars shown in the Typical Section and may not equal the total number of bars required. BL1 and BL2 shall have a lap of 30 bar diameters at splices. At construction joints, first placed bars shall project 30 bar diameters beyond the joint. Estimated QUAN./LF shown for reinforcing steel does not include quantity for laps of BL1 and BL2 bars. The additional weight per longitudinal lap is shown in the table.

The minimum cover of main reinforcing bars shall be 2½" from the face of the concrete for culverts under 0 to 2 foot fills and shall be 2" from the face of cencrete for all other culverts.

All reinforcing steel for culverts under 0 to 2 foot fills shall be Low Carbon/Chromium Reinforcing Steel conforming to ASTM A1035.

At the Contractor's option, BV1 and BV2 bars may be spliced at the permissible construction joint in order to facilitate construction. No additional compensation shall be provided for the increase in reinforcing steel quantity due to the splices.

Bar HW2 shall be 4" less than culvert height in length.

Headwall quantities shown assume wingwalls are to be built at a 45° angle to the headwall.

The designs are applicable to the fill height and other conditions indicated. Any change in the conditions invalidates these designs.

Wingwalls referenced by letter apply when the acceptable foundation level is the same for both box and wings. If foundation levels are different, the height of the wingwall shall be adjusted by selection of another lettered wingwall of appropriate height. For wingwall details, refer to standard series BCW for the appropriate fill slope.

For details of extending existing boxes, refer to Standard BCE-01.

For modification of details for skewed culverts, see the skewed box details included in the road plans.

This standard shall be used with the BCD standard series.

A COPY OF THE ORIGINAL SEALED AND SIGNED DRAWING IS ON FILE IN THE CENTRAL OFFICE.

SPECIFICATION REFERENCE	DOUBLE BOX CULVERTS STANDARD DETAILS VIRGINIA DEPARTMENT OF TRANSPORTATION	VDOT ROAD AND BRIDGE STANDARDS	
		REVISION DATE	SHEET 2 OF 3
		07/12	1003.02

BCD-DT

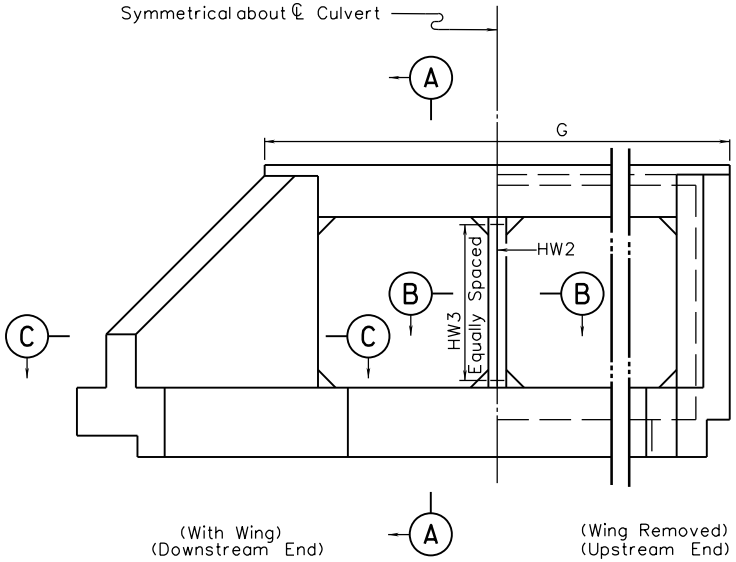

END ELEVATION

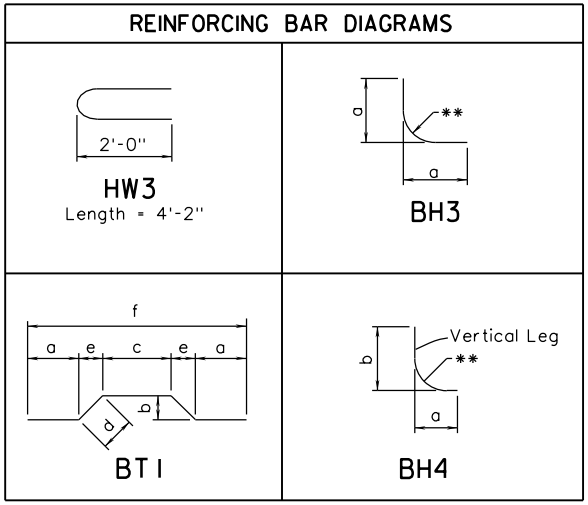

TABLE A	
Bar Size	Pin Dia.
*3	2¼"
*4	3"
*5	3¾"
*6	4½"
*7	5¼"
*8	6"
*9	9"

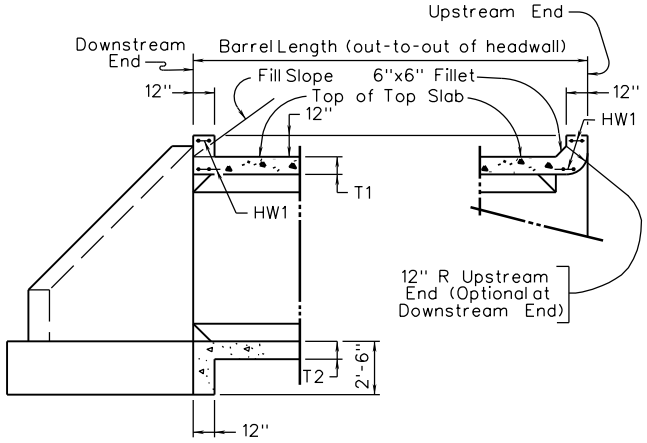

SECTION A-A
(With Wing)

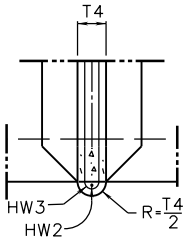

PART SECTION B-B
UPSTREAM END
(Optional at Downstream End)

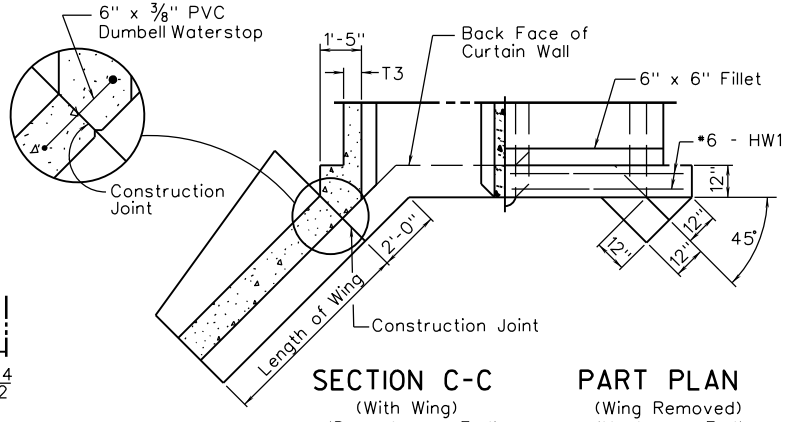

SECTION C-C
(With Wing)
(Downstream End)

PART PLAN
(Wing Removed)
(Upstream End)

VDOT
ROAD AND BRIDGE STANDARDS

SHEET 3 OF 3
1003.03

REVISION DATE
07/11

DOUBLE BOX CULVERTS

STANDARD DETAILS

VIRGINIA DEPARTMENT OF TRANSPORTATION

SPECIFICATION REFERENCE

BCD-DT

THIS PAGE INTENTIONALLY LEFT BLANK

SPECIFICATION REFERENCE	DOUBLE BOX CULVERTS STANDARD DETAILS VIRGINIA DEPARTMENT OF TRANSPORTATION	VDOT ROAD AND BRIDGE STANDARDS	
		REVISION DATE 07/11	SHEET 1 OF 1 1003.04

BCD-02

FOR TYPICAL SECTION, NOTES AND OTHER DETAILS, REFER TO STANDARD BCD-DT.

DIMENSIONS						REINFORCING STEEL																										
SPAN	HGHT	T1	T2	T3	T4							BH1			BH2			BH3				BH4					BV1			BV2		
(FT.)	(FT.)	TOP SLAB	BOTTOM SLAB	EXTERIOR WALL (IN.)	INTERIOR WALL (IN.)	A	B	C	D	E	F	SIZE	SPACING C-C	LENGTH	SIZE	SPACING C-C	LENGTH	SIZE	SPACING C-C	a	LENGTH	SIZE	SPACING C-C	a	b	LENGTH	SIZE	SPACING C-C	LENGTH	SIZE	SPACING C-C	LENGTH
3	3	8"	8"	8"	8"	6	6'- 0"	12	6'- 0"	1	1'- 0"	4	12"	7'- 6"	4	12"	7'- 8"	--	---	-----	-----	4	12"	2'- 1¼"	2'- 8"	4'- 6"	4	12"	4'- 0"	4	12"	4'- 0"
3	4	8¼"	8¼"	8"	8"	6	6'- 0"	12	6'- 0"	2	2'- 0"	4	12"	7'- 6"	4	12"	7'- 8"	--	---	-----	-----	4	12"	2'- 1¼"	3'- 2¼"	5'- 0"	4	12"	5'- 0"	4	12"	5'- 0"
4	3	8¼"	8¼"	8"	8"	8	8'- 0"	16	8'- 0"	1	1'- 0"	4	12"	9'- 1"	4	12"	9'- 8"	--	---	-----	-----	4	12"	2'- 3⅝"	2'- 8¼"	4'- 9"	4	10½"	4'- 0"	4	12"	4'- 0"
4	4	8½"	8½"	8"	8"	8	8'- 0"	16	8'- 0"	2	2'- 0"	4	12"	9'- 1"	4	12"	9'- 8"	--	---	-----	-----	4	12"	2'- 3⅝"	3'- 2½"	5'- 3"	4	12"	5'- 1"	4	12"	5'- 1"
4	5	8½"	8½"	8"	8"	8	8'- 0"	16	8'- 0"	3	3'- 0"	4	12"	9'- 1"	4	12"	9'- 8"	--	---	-----	-----	4	12"	2'- 3⅝"	3'- 8½"	5'- 9"	4	12"	6'- 1"	4	12"	6'- 1"
4	6	8½"	8½"	8"	8"	8	8'- 0"	16	8'- 0"	4	4'- 0"	4	12"	9'- 1"	4	12"	9'- 8"	--	---	-----	-----	4	12"	2'- 3⅝"	4'- 2½"	6'- 3"	4	12"	7'- 1"	4	12"	7'- 1"
5	3	8½"	8½"	8"	8"	10	10'- 0"	20	10'- 0"	1	1'- 0"	4	12"	10'- 8"	4	12"	11'- 8"	--	---	-----	-----	4	12"	2'- 6"	2'- 8½"	4'-11"	4	12"	4'- 1"	4	12"	4'- 1"
5	4	8½"	8½"	8"	8"	10	10'- 0"	20	10'- 0"	2	2'- 0"	4	11"	10'- 8"	4	11"	11'- 8"	--	---	-----	-----	4	11"	2'- 6"	3'- 2½"	5'- 5"	4	12"	5'- 1"	4	12"	5'- 1"
5	5	8½"	8½"	8"	8"	10	10'- 0"	20	10'- 0"	3	3'- 0"	4	11"	10'- 8"	4	11"	11'- 8"	--	---	-----	-----	4	11"	2'- 6"	3'- 8½"	5'-11"	4	12"	6'- 1"	4	12"	6'- 1"
5	6	8½"	8½"	8"	8"	10	10'- 0"	20	10'- 0"	4	4'- 0"	4	11"	10'- 8"	4	11"	11'- 8"	--	---	-----	-----	4	11"	2'- 6"	4'- 2½"	6'- 5"	4	12"	7'- 1"	4	12"	7'- 1"
5	7	8¾"	8¾"	8"	8"	10	10'- 0"	20	10'- 0"	5	5'- 0"	4	11"	10'- 8"	4	11"	11'- 8"	--	---	-----	-----	4	11"	2'- 6"	4'- 8¾"	7'- 0"	4	12"	8'- 2"	4	12"	8'- 2"
6	4	8½"	8½"	8"	8"	12	12'- 0"	24	12'- 0"	2	2'- 0"	4	10"	12'- 7"	4	10"	13'- 8"	--	---	-----	-----	4	10"	2'- 8⅜"	3'- 2½"	5'- 8"	4	12"	5'- 1"	4	12"	5'- 1"
6	5	8¾"	8¾"	8"	8"	12	12'- 0"	24	12'- 0"	3	3'- 0"	4	10"	12'- 7"	4	10"	13'- 8"	--	---	-----	-----	4	10"	2'- 8⅜"	3'- 8¾"	6'- 2"	4	12"	6'- 2"	4	12"	6'- 2"
6	6	8¾"	8¾"	8"	8"	12	12'- 0"	24	12'- 0"	4	4'- 0"	4	9"	12'- 7"	4	9"	13'- 8"	--	---	-----	-----	4	9"	2'- 8⅜"	4'- 2¾"	6'- 8"	4	12"	7'- 2"	4	12"	7'- 2"
6	7	8¾"	8¾"	8"	8"	12	12'- 0"	24	12'- 0"	5	5'- 0"	4	9"	12'- 7"	4	9"	13'- 8"	--	---	-----	-----	4	9"	2'- 8⅜"	4'- 8¾"	7'- 2"	4	12"	8'- 2"	4	12"	8'- 2"
6	8	8¾"	8¾"	8"	8"	12	12'- 0"	24	12'- 0"	6	6'- 0"	4	9"	12'- 7"	4	9"	13'- 8"	--	---	-----	-----	4	9"	2'- 8⅜"	5'- 2¾"	7'- 8"	4	12"	9'- 2"	4	12"	9'- 2"
7	4	8¾"	8¾"	8"	8"	14	14'- 0"	28	14'- 0"	2	2'- 0"	4	9"	14'- 7"	4	9"	15'- 8"	4	9"	2'-10¾"	5'- 6"	4	9"	2'-10¾"	3'- 2¾"	5'-10"	4	12"	5'- 2"	4	11"	5'- 2"
7	6	8¾"	8¾"	8"	8"	14	14'- 0"	28	14'- 0"	4	4'- 0"	4	8"	14'- 7"	4	8"	15'- 8"	4	8"	2'-10¾"	5'- 6"	4	8"	2'-10¾"	4'- 2¾"	6'-10"	4	12"	7'- 2"	4	11½"	7'- 2"
7	8	8¾"	8¾"	8"	8"	14	14'- 0"	28	14'- 0"	6	6'- 0"	4	8"	14'- 7"	4	8"	15'- 8"	4	8"	3'- 2"	6'- 0"	4	8"	2'-10¾"	5'- 2¾"	7'-10"	4	12"	9'- 2"	4	12"	9'- 2"
7	10	9"	9"	8"	8"	14	14'- 0"	28	14'- 0"	8	8'- 0"	5	12"	14'- 7"	5	12"	15'- 8"	4	12"	3'- 7"	6'-10"	5	12"	2'-10¾"	6'- 3"	8'-10"	4	12"	11'- 2"	4	12"	11'- 2"
8	4	8¾"	8¾"	8"	8"	16	16'- 0"	32	16'- 0"	2	2'- 0"	5	11"	16'- 4"	5	11"	17'- 8"	4	11"	3'- 1¼"	5'-11"	5	11"	3'- 1¼"	3'- 2¾"	6'- 0"	4	12"	5'- 2"	4	10"	5'- 2"
8	6	8¾"	8¾"	8"	8"	16	16'- 0"	32	16'- 0"	4	4'- 0"	5	11"	16'- 4"	5	11"	17'- 8"	4	11"	3'- 1¼"	5'-11"	5	11"	3'- 1¼"	4'- 2¾"	7'- 0"	4	12"	7'- 2"	4	10"	7'- 2"
8	8	9"	9"	8"	8"	16	16'- 0"	32	16'- 0"	6	6'- 0"	5	11"	16'- 4"	5	11"	17'- 8"	4	11"	3'- 1¼"	5'-11"	5	11"	3'- 1¼"	5'- 3"	8'- 0"	4	12"	9'- 2"	4	10½"	9'- 2"
8	10	9"	9"	8"	8"	16	16'- 0"	32	16'- 0"	8	8'- 0"	5	10"	16'- 4"	5	10"	17'- 8"	4	10"	3'- 7"	6'-10"	5	10"	3'- 1¼"	6'- 3"	9'- 0"	4	12"	11'- 2"	4	11"	11'- 2"
9	4	8¾"	8¾"	8"	8"	18	18'- 0"	36	18'- 0"	2	2'- 0"	5	10"	18'- 4"	5	10"	19'- 8"	4	10"	3'- 3⅝"	6'- 4"	5	10"	3'- 3⅝"	3'- 2¾"	6'- 2"	4	12"	5'- 2"	4	9"	5'- 2"
9	6	8¾"	8¾"	8"	8"	18	18'- 0"	36	18'- 0"	4	4'- 0"	5	9"	18'- 4"	5	9"	19'- 8"	4	9"	3'- 3⅝"	6'- 4"	5	9"	3'- 3⅝"	4'- 2¾"	7'- 2"	4	12"	7'- 2"	4	9½"	7'- 2"
9	8	9½"	9½"	8"	8"	18	18'- 0"	36	18'- 0"	6	6'- 0"	5	10"	18'- 4"	5	10"	19'- 8"	4	10"	3'- 3⅝"	6'- 4"	5	10"	3'- 3⅝"	5'- 3½"	8'- 3"	4	12"	9'- 3"	4	10"	9'- 3"
9	10	9¾"	9¾"	8"	8"	18	18'- 0"	36	18'- 0"	8	8'- 0"	5	9"	18'- 4"	5	9"	19'- 8"	4	9"	3'- 8"	6'-11"	5	9"	3'- 3⅝"	6'- 3¾"	9'- 3"	4	12"	11'- 3"	4	10½"	11'- 3"
9	12	9¾"	9¾"	8"	8"	18	18'- 0"	36	18'- 0"	10	10'- 0"	6	12"	18'- 4"	6	12"	19'- 8"	5	12"	4'- 1"	7'-11"	6	12"	3'-10"	7'- 7¼"	11'- 1"	5	12"	13'- 3"	4	11½"	13'- 3"
10	4	9½"	9½"	8"	8"	20	20'- 0"	40	20'- 0"	2	2'- 0"	5	9"	20'- 4"	5	9"	21'- 8"	4	9"	3'- 6"	6'- 9"	5	9"	3'- 6"	3'- 3½"	6'- 6"	4	12"	5'- 3"	4	8½"	5'- 3"
10	6	9½"	9½"	8"	8"	20	20'- 0"	40	20'- 0"	4	4'- 0"	5	9"	20'- 4"	5	9"	21'- 8"	4	9"	3'- 6"	6'- 9"	5	9"	3'- 6"	4'- 3½"	7'- 6"	4	12"	7'- 3"	4	9"	7'- 3"
10	8	9¾"	9¾"	8"	8"	20	20'- 0"	40	20'- 0"	6	6'- 0"	6	12"	20'- 4"	6	12"	21'- 8"	5	12"	3'- 6"	6'- 8"	6	12"	4'- 0"	5'- 7¼"	9'- 3"	4	12"	9'- 3"	4	10"	9'- 3"
10	10	9¾"	9¾"	8"	8"	20	20'- 0"	40	20'- 0"	8	8'- 0"	5	8"	20'- 4"	5	8"	21'- 8"	4	8"	3'- 6"	6'- 9"	5	8"	3'- 6"	6'- 3¾"	9'- 6"	4	12"	11'- 3"	4	10"	11'- 3"
10	12	10"	10"	8"	8"	20	20'- 0"	40	20'- 0"	10	10'- 0"	5	8"	20'- 4"	5	8"	21'- 8"	4	8"	4'- 1"	7'-11"	5	8"	3'- 6"	7'- 4"	10'- 6"	5	12"	13'- 4"	4	10"	13'- 4"
12	6	10½"	10½"	8"	8"	24	24'- 0"	48	24'- 0"	4	4'- 0"	6	12"	24'- 4"	6	12"	25'- 8"	5	12"	3'-10¾"	7'- 6"	6	12"	4'- 5"	4'- 8"	8'- 8"	4	12"	7'- 5"	4	8"	7'- 5"
12	8	10¾"	10¾"	8"	8"	24	24'- 0"	48	24'- 0"	6	6'- 0"	5	8"	24'- 4"	5	8"	25'- 8"	4	8"	3'-10¾"	7'- 6"	5	8"	3'-10¾"	5'- 4¾"	9'- 0"	4	12"	9'- 5"	4	9"	9'- 5"
12	10	10¾"	10¾"	8"	8"	24	24'- 0"	48	24'- 0"	8	8'- 0"	6	10"	24'- 4"	6	10"	25'- 8"	5	10"	3'-10¾"	7'- 6"	6	10"	4'- 5"	6'- 8¼"	10'- 9"	4	12"	11'- 5"	4	10"	11'- 5"
12	12	11"	11"	8"	8"	24	24'- 0"	48	24'- 0"	10	10'- 0"	6	9"	24'- 4"	5	9"	25'- 8"	5	9"	4'- 2"	8'- 0"	5	9"	3'-10¾"	7'- 5"	11'- 0"	5	12"	13'- 6"	4	10"	13'- 6"

A COPY OF THE ORIGINAL SEALED AND SIGNED DRAWING IS ON FILE IN THE CENTRAL OFFICE.

VDOT
ROAD AND BRIDGE STANDARDS

SHEET 1 OF 2 | REVISION DATE
1003.05 | 07/11

DOUBLE BOX CULVERTS

0 TO 2 FT. FILLS

VIRGINIA DEPARTMENT OF TRANSPORTATION

SPECIFICATION REFERENCE

BCD-02

FOR TYPICAL SECTION, NOTES AND OTHER DETAILS, REFER TO STANDARD BCD-DT.

SPAN (FT.)	HGHT (FT.)	REINFORCING STEEL BT1 SIZE	SPACING c-c	a	b	c	d	e	f	g	LENGTH	NO. BL1 #4 BARS	NO. BL2 #3 BARS	REINFORCING STEEL (LBS/LONG. JT)	QUAN./LF CONCRETE CLASS A4 (CY/LF)	REINFORCING STEEL (LBS/LF)	HEADWALLS G HEADWALL LENGTH	HW1 SIZE	HW1 LENGTH	NO. HW2 BARS	NO. HW3 BARS	INLET CONCRETE CL. A4 (CY)	INLET REINFORCING STEEL (LBS)	OUTLET CONCRETE CL. A4 (CY)	OUTLET REINFORCING STEEL (LBS)	WINGWALL
3	3	4	12"	2'- 8 7/8"	0'- 4 1/2"	1'- 6 5/8"	0'- 5 7/8"	0'- 3 3/4"	7'- 7 7/8"	-----	7'-11"	38	12	35.966	0.694	83.447	9'- 6"	6	9'- 2"	1	4	1.433	67.988	1.425	55.073	A
3	4	4	12"	2'- 8 3/4"	0'- 4 3/4"	1'- 6 3/8"	0'- 6 1/4"	0'- 4"	7'- 7 7/8"	-----	7'-11"	38	18	38.084	0.780	89.711	9'- 6"	6	9'- 2"	1	5	1.530	71.439	1.516	55.073	C
4	3	4	12"	3'- 6 3/8"	0'- 4 3/4"	1'-11 1/4"	0'- 6 1/4"	0'- 4"	9'- 8"	-----	9'-11"	48	12	44.316	0.807	99.018	11'- 6"	6	11'- 2"	1	4	1.632	80.004	1.631	67.089	A
4	4	4	12"	3'- 6 1/4"	0'- 5"	1'-11"	0'- 6 1/2"	0'- 4 1/4"	9'- 8"	-----	9'-11"	48	18	46.434	0.896	104.741	11'- 6"	6	11'- 2"	1	5	1.728	83.455	1.721	67.089	C
4	5	4	12"	3'- 6 1/4"	0'- 5"	1'-11"	0'- 6 1/2"	0'- 4 1/4"	9'- 8"	-----	9'-11"	48	24	48.552	0.970	111.005	11'- 6"	6	11'- 2"	1	6	1.827	86.907	1.813	67.089	E
4	6	4	12"	3'- 6 1/4"	0'- 5"	1'-11"	0'- 6 1/2"	0'- 4 1/4"	9'- 8"	-----	9'-11"	48	30	50.670	1.044	117.269	11'- 6"	6	11'- 2"	1	7	1.926	90.358	1.906	67.089	G
5	3	4	12"	4'- 3 7/8"	0'- 5"	2'- 3 3/4"	0'- 6 1/2"	0'- 4 1/4"	11'- 8"	-----	11'-11"	58	12	52.666	0.927	113.062	13'- 6"	6	13'- 2"	1	4	1.828	92.020	1.834	79.105	A
5	4	4	11"	4'- 3 7/8"	0'- 5"	2'- 3 3/4"	0'- 6 1/2"	0'- 4 1/4"	11'- 8"	-----	11'-11"	58	18	54.784	1.000	124.802	13'- 6"	6	13'- 2"	1	5	1.927	95.471	1.927	79.105	C
5	5	4	11"	4'- 3 7/8"	0'- 5"	2'- 3 3/4"	0'- 6 1/2"	0'- 4 1/4"	11'- 8"	-----	11'-11"	58	24	56.902	1.073	131.187	13'- 6"	6	13'- 2"	1	6	2.026	98.923	2.019	79.105	E
5	6	4	11"	4'- 3 7/8"	0'- 5"	2'- 3 3/4"	0'- 6 1/2"	0'- 4 1/4"	11'- 8"	-----	11'-11"	58	30	59.020	1.147	137.572	13'- 6"	6	13'- 2"	1	7	2.125	102.374	2.112	79.105	G
5	7	4	11"	4'- 3 3/4"	0'- 5 1/4"	2'- 3 1/2"	0'- 6 7/8"	0'- 4 1/2"	11'- 8"	-----	12'- 0"	58	36	61.138	1.239	144.545	13'- 6"	6	13'- 2"	1	8	2.220	105.825	2.200	79.105	I
6	4	4	10"	5'- 1 1/2"	0'- 5"	2'- 8 1/2"	0'- 6 1/2"	0'- 4 1/4"	13'- 8"	-----	13'-11"	68	18	63.134	1.103	152.761	15'- 6"	6	15'- 2"	1	5	2.127	107.487	2.133	91.121	C
6	5	4	10"	5'- 1 3/8"	0'- 5 1/4"	2'- 8 1/4"	0'- 6 7/8"	0'- 4 1/2"	13'- 8"	-----	14'- 0"	68	24	65.252	1.198	159.848	15'- 6"	6	15'- 2"	1	6	2.220	110.939	2.219	91.121	E
6	6	4	9"	5'- 1 3/8"	0'- 5 1/4"	2'- 8 1/4"	0'- 6 7/8"	0'- 4 1/2"	13'- 8"	-----	14'- 0"	68	30	67.370	1.271	178.326	15'- 6"	6	15'- 2"	1	7	2.319	114.390	2.312	91.121	G
6	7	4	9"	5'- 1 3/8"	0'- 5 1/4"	2'- 8 1/4"	0'- 6 7/8"	0'- 4 1/2"	13'- 8"	-----	14'- 0"	68	36	69.488	1.344	184.438	15'- 6"	6	15'- 2"	1	8	2.417	117.841	2.405	91.121	I
6	8	4	9"	5'- 1 3/8"	0'- 5 1/4"	2'- 8 1/4"	0'- 6 7/8"	0'- 4 1/2"	13'- 8"	-----	14'- 0"	68	42	71.606	1.418	191.367	15'- 6"	6	15'- 2"	1	9	2.516	121.293	2.498	91.121	K
7	4	4	9"	5'-11"	0'- 5 1/4"	3'- 1 1/8"	0'- 6 7/8"	0'- 4 1/2"	15'- 8 1/8"	-----	16'- 0"	78	18	71.484	1.229	203.219	17'- 6"	6	17'- 2"	1	5	2.318	119.503	2.331	103.137	C
7	6	4	8"	5'-11"	0'- 5 1/4"	3'- 1 1/8"	0'- 6 7/8"	0'- 4 1/2"	15'- 8 1/8"	-----	16'- 0"	78	30	75.720	1.375	231.339	17'- 6"	6	17'- 2"	1	7	2.516	126.406	2.516	103.137	G
7	8	4	8"	5'-11"	0'- 5 1/4"	3'- 1 1/8"	0'- 6 7/8"	0'- 4 1/2"	15'- 8 1/8"	-----	16'- 0"	78	42	79.956	1.521	247.159	17'- 6"	6	17'- 2"	1	9	2.714	133.309	2.702	103.137	K
7	10	5	12"	5'-10 7/8"	0'- 5 5/8"	3'- 7/8"	0'- 7 3/8"	0'- 4 3/4"	15'- 8 1/8"	-----	16'- 0"	78	54	84.192	1.693	259.878	17'- 6"	6	17'- 2"	1	11	2.904	140.211	2.880	103.137	O
8	4	5	11"	6'- 8 1/2"	0'- 5 3/8"	3'- 5 7/8"	0'- 7"	0'- 4 1/2"	17'- 7 7/8"	-----	17'-11"	88	18	79.834	1.333	249.914	19'- 6"	6	19'- 2"	1	5	2.516	131.519	2.535	115.153	C
8	6	5	11"	6'- 8 1/2"	0'- 5 3/8"	3'- 5 7/8"	0'- 7"	0'- 4 1/2"	17'- 7 7/8"	-----	17'-11"	88	30	84.070	1.480	265.269	19'- 6"	6	19'- 2"	1	7	2.714	138.422	2.721	115.153	G
8	8	5	11"	6'- 8 3/8"	0'- 5 5/8"	3'- 5 5/8"	0'- 7 3/8"	0'- 4 3/4"	17'- 7 7/8"	-----	18'- 0"	88	42	88.306	1.655	280.192	19'- 6"	6	19'- 2"	1	9	2.903	145.325	2.897	115.153	K
8	10	5	10"	6'- 8 3/8"	0'- 5 5/8"	3'- 5 5/8"	0'- 7 3/8"	0'- 4 3/4"	17'- 7 7/8"	-----	18'- 0"	88	54	92.542	1.800	313.547	19'- 6"	6	19'- 2"	1	11	3.101	152.227	3.083	115.153	O
9	4	5	10"	7'- 6 1/8"	0'- 5 3/8"	3'-10 3/4"	0'- 7"	0'- 4 1/2"	19'- 8"	-----	20'- 0"	98	18	88.184	1.438	290.162	21'- 6"	6	21'- 2"	1	5	2.714	143.535	2.740	127.169	C
9	6	5	9"	7'- 6 1/8"	0'- 5 3/8"	3'-10 3/4"	0'- 7"	0'- 4 1/2"	19'- 8"	-----	20'- 0"	98	30	92.420	1.584	322.802	21'- 6"	6	21'- 2"	1	7	2.912	150.438	2.925	127.169	G
9	8	5	10"	7'- 5 3/4"	0'- 6 1/8"	3'-10"	0'- 8 1/8"	0'- 5 1/4"	19'- 8"	-----	20'- 0"	98	42	96.656	1.825	321.303	21'- 6"	6	21'- 2"	1	9	3.096	157.341	3.097	127.169	L
9	10	5	9"	7'- 5 5/8"	0'- 6 3/8"	3'- 9 3/4"	0'- 8 3/8"	0'- 5 1/2"	19'- 8"	-----	20'- 0"	98	54	100.892	2.000	361.853	21'- 6"	6	21'- 2"	1	11	3.284	164.243	3.272	127.169	P
9	12	6	12"	7'- 5 5/8"	0'- 6 1/2"	3'- 9 3/4"	0'- 8 1/2"	0'- 5 1/2"	19'- 8"	-----	20'- 0"	98	66	105.128	2.145	409.925	21'- 6"	6	21'- 2"	1	13	3.482	171.146	3.458	127.169	T
10	4	5	9"	8'- 3 3/8"	0'- 6 1/8"	4'- 2 3/4"	0'- 8 1/8"	0'- 5 1/4"	21'- 8"	-----	22'- 0"	108	18	96.534	1.645	333.154	23'- 6"	6	23'- 2"	1	5	2.894	155.551	2.926	139.185	D
10	6	5	9"	8'- 3 3/8"	0'- 6 1/8"	4'- 2 3/4"	0'- 8 1/8"	0'- 5 1/4"	21'- 8"	-----	22'- 0"	108	30	100.770	1.791	356.023	23'- 6"	6	23'- 2"	1	7	3.092	162.454	3.112	139.185	H
10	8	6	12"	8'- 3 1/4"	0'- 6 1/2"	4'- 2 1/2"	0'- 8 1/2"	0'- 5 1/2"	21'- 8"	-----	22'- 0"	108	42	105.006	1.970	395.204	23'- 6"	6	23'- 2"	1	9	3.277	169.357	3.285	139.185	L
10	10	5	8"	8'- 3 1/4"	0'- 6 3/8"	4'- 2 1/2"	0'- 8 3/8"	0'- 5 1/2"	21'- 8"	-----	22'- 0"	108	54	109.242	2.116	423.807	23'- 6"	6	23'- 2"	1	11	3.475	176.259	3.471	139.185	P
10	12	5	8"	8'- 3 1/8"	0'- 6 5/8"	4'- 2 1/4"	0'- 8 3/4"	0'- 5 3/4"	21'- 8"	-----	22'- 1"	108	66	113.478	2.296	454.858	23'- 6"	6	23'- 2"	1	13	3.661	183.162	3.644	139.185	T
12	6	6	12"	9'-10 1/8"	0'- 7 1/4"	4'-11 3/8"	0'- 9 5/8"	0'- 6 1/4"	25'- 8 1/8"	-----	26'- 1"	128	30	117.470	2.181	423.583	27'- 6"	6	27'- 2"	1	7	3.417	186.486	3.450	163.217	H
12	8	5	8"	9'-10"	0'- 7 3/8"	4'-11 1/8"	0'- 9 7/8"	0'- 6 1/2"	25'- 8 1/8"	-----	26'- 1"	128	42	121.706	2.366	468.309	27'- 6"	6	27'- 2"	1	9	3.600	193.389	3.621	163.217	L
12	10	6	10"	9'-10"	0'- 7 1/2"	4'-11 1/8"	0'- 9 7/8"	0'- 6 1/2"	25'- 8 1/8"	-----	26'- 1"	128	54	125.942	2.509	535.040	27'- 6"	6	27'- 2"	1	11	3.798	200.291	3.806	163.217	P
12	12	6	9"	9'- 9 7/8"	0'- 7 3/4"	4'-10 7/8"	0'-10 1/4"	0'- 6 3/4"	25'- 8 1/8"	-----	26'- 1"	128	66	130.178	2.696	546.448	27'- 6"	6	27'- 2"	1	13	3.980	207.194	3.976	163.217	T

A COPY OF THE ORIGINAL SEALED AND SIGNED DRAWING IS ON FILE IN THE CENTRAL OFFICE.

SPECIFICATION REFERENCE

DOUBLE BOX CULVERTS

0 TO 2 FT. FILLS

VIRGINIA DEPARTMENT OF TRANSPORTATION

VDOT

ROAD AND BRIDGE STANDARDS

REVISION DATE 01/15

SHEET 2 OF 2

1003.06

BCD-05

FOR TYPICAL SECTION, NOTES AND OTHER DETAILS, REFER TO STANDARD BCD-DT.

DIMENSIONS						REINFORCING STEEL																										
SPAN	HGHT	T1	T2	T3	T4							BH1			BH2			BH3				BH4					BV1			BV2		
(FT.)	(FT.)	TOP SLAB	BOTTOM SLAB	EXTERIOR WALL (IN.)	INTERIOR WALL (IN.)	A	B	C	D	E	F	SIZE	SPACING C-C	LENGTH	SIZE	SPACING C-C	LENGTH	SIZE	SPACING C-C	a	LENGTH	SIZE	SPACING C-C	a	b	LENGTH	SIZE	SPACING C-C	LENGTH	SIZE	SPACING C-C	LENGTH
3	3	8"	8"	8"	8"	6	6'- 0"	6	6'- 0"	1	1'- 0"	4	12"	7'- 6"	4	12"	7'- 8"	--	---	-----	-----	4	12"	2'- 1 1/4"	2'- 8"	4'- 6"	4	12"	4'- 0"	4	12"	4'- 0"
3	4	8"	8"	8"	8"	6	6'- 0"	6	6'- 0"	2	2'- 0"	4	12"	7'- 6"	4	12"	7'- 8"	--	---	-----	-----	4	12"	2'- 1 1/4"	3'- 2"	5'- 0"	4	12"	5'- 0"	4	12"	5'- 0"
4	3	8"	8"	8"	8"	8	8'- 0"	8	8'- 0"	1	1'- 0"	4	12"	9'- 1"	4	12"	9'- 8"	--	---	-----	-----	4	12"	2'- 3 5/8"	2'- 8"	4'- 8"	4	12"	4'- 0"	4	12"	4'- 0"
4	4	8"	8"	8"	8"	8	8'- 0"	8	8'- 0"	2	2'- 0"	4	12"	9'- 1"	4	12"	9'- 8"	--	---	-----	-----	4	12"	2'- 3 5/8"	3'- 2"	5'- 2"	4	12"	5'- 0"	4	12"	5'- 0"
4	5	8"	8"	8"	8"	8	8'- 0"	8	8'- 0"	3	3'- 0"	4	12"	9'- 1"	4	12"	9'- 8"	--	---	-----	-----	4	12"	2'- 3 5/8"	3'- 8"	5'- 8"	4	12"	6'- 0"	4	12"	6'- 0"
4	6	8"	8"	8"	8"	8	8'- 0"	8	8'- 0"	4	4'- 0"	4	12"	9'- 1"	4	12"	9'- 8"	--	---	-----	-----	4	12"	2'- 3 5/8"	4'- 2"	6'- 2"	4	12"	7'- 0"	4	12"	7'- 0"
5	3	8"	8"	8"	8"	10	10'- 0"	10	10'- 0"	1	1'- 0"	4	12"	10'- 8"	4	12"	11'- 8"	--	---	-----	-----	4	12"	2'- 6"	2'- 8"	4'-11"	4	12"	4'- 0"	4	12"	4'- 0"
5	4	8"	8"	8"	8"	10	10'- 0"	10	10'- 0"	2	2'- 0"	4	12"	10'- 8"	4	12"	11'- 8"	--	---	-----	-----	4	12"	2'- 6"	3'- 2"	5'- 5"	4	12"	5'- 0"	4	12"	5'- 0"
5	5	8"	8"	8"	8"	10	10'- 0"	10	10'- 0"	3	3'- 0"	4	12"	10'- 8"	4	12"	11'- 8"	--	---	-----	-----	4	12"	2'- 6"	3'- 8"	5'-11"	4	12"	6'- 0"	4	12"	6'- 0"
5	6	8"	8"	8"	8"	10	10'- 0"	10	10'- 0"	4	4'- 0"	4	12"	10'- 8"	4	12"	11'- 8"	--	---	-----	-----	4	12"	2'- 6"	4'- 2"	6'- 5"	4	12"	7'- 0"	4	12"	7'- 0"
5	7	8"	8"	8"	8"	10	10'- 0"	10	10'- 0"	5	5'- 0"	4	12"	10'- 8"	4	12"	11'- 8"	--	---	-----	-----	4	12"	2'- 6"	4'- 8"	6'-11"	4	12"	8'- 0"	4	12"	8'- 0"
6	4	8"	8"	8"	8"	12	12'- 0"	12	12'- 0"	2	2'- 0"	4	12"	12'- 7"	4	12"	13'- 8"	4	12"	2'- 8 3/8"	5'- 2"	4	12"	2'- 8 3/8"	3'- 2"	5'- 7"	4	12"	5'- 0"	4	12"	5'- 0"
6	5	8"	8"	8"	8"	12	12'- 0"	12	12'- 0"	3	3'- 0"	4	12"	12'- 7"	4	12"	13'- 8"	4	12"	2'- 8 3/8"	5'- 2"	4	12"	2'- 8 3/8"	3'- 8"	6'- 1"	4	12"	6'- 0"	4	12"	6'- 0"
6	6	8"	8"	8"	8"	12	12'- 0"	12	12'- 0"	4	4'- 0"	4	12"	12'- 7"	4	12"	13'- 8"	4	12"	2'- 8 3/8"	5'- 2"	4	12"	2'- 8 3/8"	4'- 2"	6'- 7"	4	12"	7'- 0"	4	12"	7'- 0"
6	7	8"	8"	8"	8"	12	12'- 0"	12	12'- 0"	5	5'- 0"	4	12"	12'- 7"	4	12"	13'- 8"	4	12"	2'-11"	5'- 8"	4	12"	2'- 8 3/8"	4'- 8"	7'- 1"	4	12"	8'- 0"	4	12"	8'- 0"
6	8	8"	8"	8"	8"	12	12'- 0"	12	12'- 0"	6	6'- 0"	4	12"	12'- 7"	4	12"	13'- 8"	4	12"	3'- 2"	6'- 2"	4	12"	2'- 8 3/8"	5'- 2"	7'- 7"	4	12"	9'- 0"	4	12"	9'- 0"
7	4	8"	8"	8"	8"	14	14'- 0"	14	14'- 0"	2	2'- 0"	4	11"	14'- 7"	4	11"	15'- 8"	--	---	-----	-----	5	11"	2'-10 3/4"	3'- 2"	5'- 9"	4	12"	5'- 0"	4	11 1/2"	5'- 0"
7	6	8"	8"	8"	8"	14	14'- 0"	14	14'- 0"	4	4'- 0"	4	11"	14'- 7"	4	11"	15'- 8"	--	---	-----	-----	5	11"	2'-10 3/4"	4'- 2"	6'- 9"	4	12"	7'- 0"	4	12"	7'- 0"
7	8	8"	8"	8"	8"	14	14'- 0"	14	14'- 0"	6	6'- 0"	4	10"	14'- 7"	4	10"	15'- 8"	4	10"	3'-2"	6'- 2"	4	10"	2'-10 3/4"	5'- 2"	7'-10"	4	12"	9'- 0"	4	12"	9'- 0"
7	10	8"	8"	8"	8"	14	14'- 0"	14	14'- 0"	8	8'- 0"	4	9"	14'- 7"	4	9"	15'- 8"	4	9"	3'- 6"	6'- 9"	4	9"	2'-10 3/4"	6'- 2"	8'-10"	5	12"	11'- 0"	4	12"	11'- 0"
8	4	8"	8"	8"	8"	16	16'- 0"	16	16'- 0"	2	2'- 0"	4	8"	16'- 4"	4	8"	17'- 8"	4	8"	3'- 1 1/4"	5'-11"	4	8"	3'- 1 1/4"	3'- 2"	6'- 0"	4	12"	5'- 0"	4	10"	5'- 0"
8	6	8"	8"	8"	8"	16	16'- 0"	16	16'- 0"	4	4'- 0"	5	11"	16'- 4"	5	11"	17'- 8"	4	11"	3'- 1 1/4"	5'-11"	5	11"	3'- 1 1/4"	4'- 2"	6'-11"	4	12"	7'- 0"	4	10"	7'- 0"
8	8	8"	8"	8"	8"	16	16'- 0"	16	16'- 0"	6	6'- 0"	5	11"	16'- 4"	5	11"	17'- 8"	4	11"	3'- 1 1/4"	5'-11"	5	11"	3'- 1 1/4"	5'- 2"	7'-11"	4	12"	9'- 0"	4	10"	9'- 0"
8	10	8"	8"	8"	8"	16	16'- 0"	16	16'- 0"	8	8'- 0"	5	10"	16'- 4"	5	10"	17'- 8"	4	10"	3'- 6"	6'- 9"	5	10"	3'- 1 1/4"	6'- 2"	8'-11"	5	12"	11'- 0"	4	10 1/2"	11'- 0"
9	4	8"	8"	8"	8"	18	18'- 0"	18	18'- 0"	2	2'- 0"	5	9"	18'- 4"	4	9"	19'- 8"	4	9"	3'- 3 5/8"	6'- 4"	5	9"	3'- 3 5/8"	3'- 2"	6'- 2"	4	12"	5'- 0"	4	9"	5'- 0"
9	6	8 1/4"	8 1/4"	8"	8"	18	18'- 0"	18	18'- 0"	4	4'- 0"	5	10"	18'- 4"	5	10"	19'- 8"	4	10"	3'- 3 5/8"	6'- 4"	5	10"	3'- 3 5/8"	4'- 2 1/4"	7'- 2"	4	12"	7'- 0"	4	10"	7'- 0"
9	8	8 1/2"	8 1/2"	8"	8"	18	18'- 0"	18	18'- 0"	6	6'- 0"	5	9"	18'- 4"	5	9"	19'- 8"	4	9"	3'- 3 5/8"	6'- 4"	5	9"	3'- 3 5/8"	5'- 2 1/2"	8'- 2"	4	12"	9'- 1"	4	10"	9'- 1"
9	10	9"	9"	8"	8"	18	18'- 0"	18	18'- 0"	8	8'- 0"	6	12"	18'- 4"	5	12"	19'- 8"	4	12"	3'- 7"	6'-10"	6	12"	3'-10"	6'- 7"	10'- 0"	5	12"	11'- 2"	4	10"	11'- 2"
9	12	9"	9"	8"	8"	18	18'- 0"	18	18'- 0"	10	10'- 0"	6	8"	18'- 4"	5	8"	19'- 8"	4	8"	4'- 0"	7'- 9"	5	8"	3'- 3 5/8"	7'- 3"	10'- 3"	5	8"	13'- 2"	4	11"	13'- 2"
10	4	8 1/2"	8 1/2"	8"	8"	20	20'- 0"	20	20'- 0"	2	2'- 0"	5	9"	20'- 4"	5	9"	21'- 8"	--	---	-----	-----	6	9"	4'- 0"	3'- 6"	7'- 2"	4	12"	5'- 1"	4	8"	5'- 1"
10	6	8 3/4"	8 3/4"	8"	8"	20	20'- 0"	20	20'- 0"	4	4'- 0"	5	9"	20'- 4"	5	9"	21'- 8"	4	9"	3'- 6"	6'- 9"	5	9"	3'- 6"	4'- 2 3/4"	7'- 5"	4	12"	7'- 2"	4	9"	7'- 2"
10	8	9"	9"	8"	8"	20	20'- 0"	20	20'- 0"	6	6'- 0"	6	12"	20'- 4"	6	12"	21'- 8"	4	12"	3'- 6"	6'- 9"	6	12"	4'- 0"	5'- 7"	9'- 2"	4	12"	9'- 2"	4	10"	9'- 2"
10	10	9 1/4"	9 1/4"	8"	8"	20	20'- 0"	20	20'- 0"	8	8'- 0"	5	8"	20'- 4"	5	8"	21'- 8"	4	8"	3'- 7 1/4"	6'-11"	5	8"	3'- 6"	6'- 3 1/4"	9'- 5"	4	10"	11'- 2"	4	10"	11'- 2"
10	12	9 3/4"	9 3/4"	8"	8"	20	20'- 0"	20	20'- 0"	10	10'- 0"	6	10"	20'- 4"	5	10"	21'- 8"	4	10"	4'- 1"	7'-11"	5	10"	3'- 6"	7'- 3 3/4"	10'- 6"	5	8"	13'- 3"	4	10"	13'- 3"
12	6	9 3/4"	9 3/4"	8"	8"	24	24'- 0"	24	24'- 0"	4	4'- 0"	5	8"	24'- 4"	5	8"	25'- 8"	4	8"	3'-10 3/4"	7'- 6"	5	8"	3'-10 3/4"	4'- 3 3/4"	7'-11"	4	12"	7'- 3"	4	7 1/2"	7'- 3"
12	8	9 3/4"	9 3/4"	8"	8"	24	24'- 0"	24	24'- 0"	6	6'- 0"	6	11"	24'- 4"	6	11"	25'- 8"	4	11"	3'-10 3/4"	7'- 6"	6	11"	4'- 5"	5'- 7 1/4"	9'- 8"	4	12"	9'- 3"	4	8"	9'- 3"
12	10	10 1/4"	10 1/4"	8"	8"	24	24'- 0"	24	24'- 0"	8	8'- 0"	6	9"	24'- 4"	6	9"	25'- 8"	4	9"	3'-10 3/4"	7'- 6"	6	9"	4'- 5"	6'- 7 3/4"	10'- 8"	4	10"	11'- 5"	4	10"	11'- 5"
12	12	10 1/4"	10 1/4"	8"	8"	24	24'- 0"	24	24'- 0"	10	10'- 0"	7	12"	24'- 4"	7	12"	25'- 8"	5	12"	4'- 1"	7'-11"	7	12"	4'-10"	7'-11 1/4"	12'- 3"	5	10"	13'- 5"	4	10"	13'- 5"

A COPY OF THE ORIGINAL SEALED AND SIGNED DRAWING IS ON FILE IN THE CENTRAL OFFICE.

VDOT
ROAD AND BRIDGE STANDARDS

SHEET 1 OF 2 | REVISION DATE
1003.07 | 07/11

DOUBLE BOX CULVERTS

2 TO 5 FT. FILLS

VIRGINIA DEPARTMENT OF TRANSPORTATION

SPECIFICATION REFERENCE

BCD-05

FOR TYPICAL SECTION, NOTES AND OTHER DETAILS, REFER TO STANDARD BCD-DT.

SPAN (FT.)	HGHT (FT.)	REINFORCING STEEL BT1 SIZE	SPACING c-c	a	b	c	d	e	f	g	LENGTH	NO. BL1 #4 BARS	NO. BL2 #3 BARS	REINFORCING STEEL (LBS/LONG. JT)	QUAN./LF CONCRETE CLASS A4 (CY/LF)	REINFORCING STEEL (LBS/LF)	HEADWALLS G HEADWALL LENGTH	HW1 SIZE	HW1 LENGTH	NO. HW2 BARS	NO. HW3 BARS	INLET CONCRETE CL. A4 (CY)	INLET REINFORCING STEEL (LBS)	OUTLET CONCRETE CL. A4 (CY)	OUTLET REINFORCING STEEL (LBS)	WINGWALL
3	3	4	12"	2'- 8 7/8"	0'- 4 1/2"	1'- 6 5/8"	0'- 5 7/8"	0'- 3 3/4"	7'- 7 7/8"	-----	7'-11"	32	12	30.956	0.695	79.439	9'- 6"	6	9'- 2"	1	4	1.433	67.988	1.425	55.073	A
3	4	4	12"	2'- 8 7/8"	0'- 4 1/2"	1'- 6 5/8"	0'- 5 7/8"	0'- 3 3/4"	7'- 7 7/8"	-----	7'-11"	32	18	33.074	0.768	85.703	9'- 6"	6	9'- 2"	1	5	1.531	71.439	1.517	55.073	C
4	3	4	12"	3'- 6 1/2"	0'- 4 1/2"	1'-11 1/2"	0'- 5 7/8"	0'- 3 3/4"	9'- 8"	-----	9'-11"	40	12	37.636	0.792	92.688	11'- 6"	6	11'- 2"	1	4	1.635	80.004	1.634	67.089	A
4	4	4	12"	3'- 6 1/2"	0'- 4 1/2"	1'-11 1/2"	0'- 5 7/8"	0'- 3 3/4"	9'- 8"	-----	9'-11"	40	18	39.754	0.866	98.952	11'- 6"	6	11'- 2"	1	5	1.734	83.455	1.726	67.089	C
4	5	4	12"	3'- 6 1/2"	0'- 4 1/2"	1'-11 1/2"	0'- 5 7/8"	0'- 3 3/4"	9'- 8"	-----	9'-11"	40	24	41.872	0.940	105.216	11'- 6"	6	11'- 2"	1	6	1.833	86.907	1.819	67.089	E
4	6	4	12"	3'- 6 1/2"	0'- 4 1/2"	1'-11 1/2"	0'- 5 7/8"	0'- 3 3/4"	9'- 8"	-----	9'-11"	40	30	43.990	1.013	111.480	11'- 6"	6	11'- 2"	1	7	1.932	90.358	1.912	67.089	G
5	3	4	12"	4'- 4 1/8"	0'- 4 1/2"	2'- 4 1/4"	0'- 5 7/8"	0'- 3 3/4"	11'- 8"	-----	11'-11"	48	12	44.316	0.890	106.159	13'- 6"	6	13'- 2"	1	4	1.837	92.020	1.843	79.105	A
5	4	4	12"	4'- 4 1/8"	0'- 4 1/2"	2'- 4 1/4"	0'- 5 7/8"	0'- 3 3/4"	11'- 8"	-----	11'-11"	48	18	46.434	0.964	112.423	13'- 6"	6	13'- 2"	1	5	1.936	95.471	1.935	79.105	C
5	5	4	12"	4'- 4 1/8"	0'- 4 1/2"	2'- 4 1/4"	0'- 5 7/8"	0'- 3 3/4"	11'- 8"	-----	11'-11"	48	24	48.552	1.037	118.687	13'- 6"	6	13'- 2"	1	6	2.035	98.923	2.028	79.105	E
5	6	4	12"	4'- 4 1/8"	0'- 4 1/2"	2'- 4 1/4"	0'- 5 7/8"	0'- 3 3/4"	11'- 8"	-----	11'-11"	48	30	50.670	1.111	124.951	13'- 6"	6	13'- 2"	1	7	2.134	102.374	2.121	79.105	G
5	7	4	12"	4'- 4 1/8"	0'- 4 1/2"	2'- 4 1/4"	0'- 5 7/8"	0'- 3 3/4"	11'- 8"	-----	11'-11"	48	36	52.788	1.185	131.215	13'- 6"	6	13'- 2"	1	8	2.233	105.825	2.214	79.105	I
6	4	4	12"	5'- 1 3/4"	0'- 4 1/2"	2'- 9"	0'- 5 7/8"	0'- 3 3/4"	13'- 8"	-----	13'-11"	56	18	53.114	1.060	143.938	15'- 6"	6	15'- 2"	1	5	2.138	107.487	2.144	91.121	C
6	5	4	12"	5'- 1 3/4"	0'- 4 1/2"	2'- 9"	0'- 5 7/8"	0'- 3 3/4"	13'- 8"	-----	13'-11"	56	24	55.232	1.134	150.390	15'- 6"	6	15'- 2"	1	6	2.237	110.939	2.237	91.121	E
6	6	4	12"	5'- 1 3/4"	0'- 4 1/2"	2'- 9"	0'- 5 7/8"	0'- 3 3/4"	13'- 8"	-----	13'-11"	56	30	57.350	1.207	156.842	15'- 6"	6	15'- 2"	1	7	2.336	114.390	2.330	91.121	G
6	7	4	12"	5'- 1 3/4"	0'- 4 1/2"	2'- 9"	0'- 5 7/8"	0'- 3 3/4"	13'- 8"	-----	13'-11"	56	36	59.468	1.281	164.656	15'- 6"	6	15'- 2"	1	8	2.435	117.841	2.423	91.121	I
6	8	4	12"	5'- 1 3/4"	0'- 4 1/2"	2'- 9"	0'- 5 7/8"	0'- 3 3/4"	13'- 8"	-----	13'-11"	56	42	61.586	1.354	172.470	15'- 6"	6	15'- 2"	1	9	2.534	121.293	2.515	91.121	K
7	4	4	11"	5'-11 3/8"	0'- 4 1/2"	3'- 1 7/8"	0'- 5 7/8"	0'- 3 3/4"	15'- 8 1/8"	-----	15'-11"	64	18	59.794	1.158	160.596	17'- 6"	6	17'- 2"	1	5	2.341	119.503	2.353	103.137	C
7	6	4	11"	5'-11 3/8"	0'- 4 1/2"	3'- 1 7/8"	0'- 5 7/8"	0'- 3 3/4"	15'- 8 1/8"	-----	15'-11"	64	30	64.030	1.305	175.066	17'- 6"	6	17'- 2"	1	7	2.539	126.406	2.539	103.137	G
7	8	4	10"	5'-11 3/8"	0'- 4 1/2"	3'- 1 7/8"	0'- 5 7/8"	0'- 3 3/4"	15'- 8 1/8"	-----	15'-11"	64	42	68.266	1.451	206.300	17'- 6"	6	17'- 2"	1	9	2.736	133.309	2.724	103.137	K
7	10	4	9"	5'-11 3/8"	0'- 4 1/2"	3'- 1 7/8"	0'- 5 7/8"	0'- 3 3/4"	15'- 8 1/8"	-----	15'-11"	64	54	72.502	1.596	246.489	17'- 6"	6	17'- 2"	1	11	2.934	140.211	2.910	103.137	O
8	4	4	8"	6'- 8 7/8"	0'- 4 1/2"	3'- 6 5/8"	0'- 5 7/8"	0'- 3 3/4"	17'- 7 7/8"	-----	17'-11"	72	18	66.474	1.251	230.979	19'- 6"	6	19'- 2"	1	5	2.543	131.519	2.562	115.153	C
8	6	5	11"	6'- 8 7/8"	0'- 4 5/8"	3'- 6 5/8"	0'- 6"	0'- 3 3/4"	17'- 7 7/8"	-----	17'-11"	72	30	70.710	1.398	253.162	19'- 6"	6	19'- 2"	1	7	2.741	138.422	2.748	115.153	G
8	8	5	11"	6'- 8 7/8"	0'- 4 5/8"	3'- 6 5/8"	0'- 6"	0'- 3 3/4"	17'- 7 7/8"	-----	17'-11"	72	42	74.946	1.545	268.516	19'- 6"	6	19'- 2"	1	9	2.939	145.325	2.933	115.153	K
8	10	5	10"	6'- 8 7/8"	0'- 4 5/8"	3'- 6 5/8"	0'- 6"	0'- 3 3/4"	17'- 7 7/8"	-----	17'-11"	72	54	79.182	1.690	309.929	19'- 6"	6	19'- 2"	1	11	3.137	152.227	3.119	115.153	O
9	4	5	9"	7'- 6 1/2"	0'- 4 5/8"	3'-11 1/2"	0'- 6"	0'- 3 3/4"	19'- 8"	-----	19'-11"	80	18	73.154	1.346	279.765	21'- 6"	6	21'- 2"	1	5	2.745	143.535	2.771	127.169	C
9	6	5	10"	7'- 6 3/8"	0'- 4 7/8"	3'-11 1/4"	0'- 6 1/4"	0'- 4"	19'- 8"	-----	19'-11"	80	30	77.390	1.524	291.536	21'- 6"	6	21'- 2"	1	7	2.933	150.438	2.946	127.169	G
9	8	5	9"	7'- 6 1/4"	0'- 5 1/8"	3'-11"	0'- 6 5/8"	0'- 4 1/4"	19'- 8"	-----	19'-11"	80	42	81.626	1.700	330.346	21'- 6"	6	21'- 2"	1	9	3.120	157.341	3.121	127.169	K
9	10	6	12"	7'- 6"	0'- 5 3/4"	3'-10 1/2"	0'- 7 1/2"	0'- 4 3/4"	19'- 8"	-----	20'- 0"	80	54	85.862	1.908	353.999	21'- 6"	6	21'- 2"	1	11	3.297	164.243	3.285	127.169	O
9	12	4	8"	7'- 6"	0'- 5 1/2"	3'-10 1/2"	0'- 7 1/4"	0'- 4 3/4"	19'- 8"	-----	20'- 0"	80	66	90.098	2.051	427.301	21'- 6"	6	21'- 2"	1	13	3.495	171.146	3.471	127.169	S
10	4	5	9"	8'- 3 7/8"	0'- 5 1/8"	4'- 3 3/4"	0'- 6 5/8"	0'- 4 1/4"	21'- 8"	-----	21'-11"	88	18	79.834	1.510	322.193	23'- 6"	6	23'- 2"	1	5	2.924	155.551	2.956	139.185	C
10	6	5	9"	8'- 3 3/4"	0'- 5 3/8"	4'- 3 1/2"	0'- 7"	0'- 4 1/2"	21'- 8"	-----	22'- 0"	88	30	84.070	1.690	341.263	23'- 6"	6	23'- 2"	1	7	3.109	162.454	3.129	139.185	G
10	8	6	12"	8'- 3 5/8"	0'- 5 3/4"	4'- 3 1/4"	0'- 7 1/2"	0'- 4 3/4"	21'- 8"	-----	22'- 0"	88	42	88.306	1.870	375.166	23'- 6"	6	23'- 2"	1	9	3.295	169.357	3.303	139.185	K
10	10	5	8"	8'- 3 1/2"	0'- 5 7/8"	4'- 3"	0'- 7 3/4"	0'- 5"	21'- 8"	-----	22'- 0"	88	54	92.542	2.049	412.716	23'- 6"	6	23'- 2"	1	11	3.499	176.259	3.495	139.185	P
10	12	6	10"	8'- 3 1/4"	0'- 6 1/2"	4'- 2 1/2"	0'- 8 1/2"	0'- 5 1/2"	21'- 8"	-----	22'- 0"	88	66	96.778	2.262	451.806	23'- 6"	6	23'- 2"	1	13	3.673	183.162	3.656	139.185	T
12	6	5	8"	9'-10 1/2"	0'- 6 3/8"	5'- 1/8"	0'- 8 3/8"	0'- 5 1/2"	25'- 8 1/8"	-----	26'- 0"	104	30	97.430	2.060	434.811	27'- 6"	6	27'- 2"	1	7	3.463	186.486	3.496	163.217	H
12	8	6	11"	9'-10 1/2"	0'- 6 1/2"	5'- 1/8"	0'- 8 1/2"	0'- 5 1/2"	25'- 8 1/8"	-----	26'- 0"	104	42	101.666	2.206	454.884	27'- 6"	6	27'- 2"	1	9	3.660	193.389	3.681	163.217	L
12	10	6	9"	9'-10 1/4"	0'- 7"	4'-11 5/8"	0'- 9 1/4"	0'- 6"	25'- 8 1/8"	-----	26'- 1"	104	54	105.902	2.428	550.271	27'- 6"	6	27'- 2"	1	11	3.828	200.291	3.837	163.217	P
12	12	7	12"	9'-10 1/4"	0'- 7 1/8"	4'-11 3/4"	0'- 9 1/4"	0'- 5 7/8"	25'- 8"	-----	26'- 1"	104	66	110.138	2.572	598.820	27'- 6"	6	27'- 2"	1	13	4.026	207.194	4.022	163.217	T

A COPY OF THE ORIGINAL SEALED AND SIGNED DRAWING IS ON FILE IN THE CENTRAL OFFICE.

SPECIFICATION REFERENCE

DOUBLE BOX CULVERTS

2 TO 5 FT. FILLS

VIRGINIA DEPARTMENT OF TRANSPORTATION

VDOT

ROAD AND BRIDGE STANDARDS

REVISION DATE 07/11

SHEET 2 OF 2

1003.08

BCD-10

FOR TYPICAL SECTION, NOTES AND OTHER DETAILS, REFER TO STANDARD BCD-DT.

DIMENSIONS						REINFORCING STEEL																										
SPAN	HGHT	T1	T2	T3	T4							BH1			BH2			BH3				BH4					BV1			BV2		
(FT.)	(FT.)	TOP SLAB	BOTTOM SLAB	EXTERIOR WALL (IN.)	INTERIOR WALL (IN.)	A	B	C	D	E	F	SIZE	SPACING C-C	LENGTH	SIZE	SPACING C-C	LENGTH	SIZE	SPACING C-C	a	LENGTH	SIZE	SPACING C-C	a	b	LENGTH	SIZE	SPACING C-C	LENGTH	SIZE	SPACING C-C	LENGTH
3	3	8"	8"	8"	8"	6	6'- 0"	6	6'- 0"	1	1'- 0"	4	12"	7'- 6"	4	12"	7'- 8"	--	---	-----	-----	4	12"	2'- 1¼"	2'- 8"	4'- 6"	4	12"	4'- 0"	4	12"	4'- 0"
3	4	8"	8"	8"	8"	6	6'- 0"	6	6'- 0"	2	2'- 0"	4	12"	7'- 6"	4	12"	7'- 8"	--	---	-----	-----	4	12"	2'- 1¼"	3'- 2"	5'- 0"	4	12"	5'- 0"	4	12"	5'- 0"
4	3	8"	8"	8"	8"	8	8'- 0"	8	8'- 0"	1	1'- 0"	4	12"	9'- 1"	4	12"	9'- 8"	--	---	-----	-----	4	12"	2'- 3⅝"	2'- 8"	4'- 8"	4	12"	4'- 0"	4	12"	4'- 0"
4	4	8"	8"	8"	8"	8	8'- 0"	8	8'- 0"	2	2'- 0"	4	12"	9'- 1"	4	12"	9'- 8"	--	---	-----	-----	4	12"	2'- 3⅝"	3'- 2"	5'- 2"	4	12"	5'- 0"	4	12"	5'- 0"
4	5	8"	8"	8"	8"	8	8'- 0"	8	8'- 0"	3	3'- 0"	4	12"	9'- 1"	4	12"	9'- 8"	--	---	-----	-----	4	12"	2'- 3⅝"	3'- 8"	5'- 8"	4	12"	6'- 0"	4	12"	6'- 0"
4	6	8"	8"	8"	8"	8	8'- 0"	8	8'- 0"	4	4'- 0"	4	12"	9'- 1"	4	12"	9'- 8"	--	---	-----	-----	4	12"	2'- 3⅝"	4'- 2"	6'- 2"	4	12"	7'- 0"	4	12"	7'- 0"
5	3	8"	8"	8"	8"	10	10'- 0"	10	10'- 0"	1	1'- 0"	4	12"	10'- 8"	4	12"	11'- 8"	--	---	-----	-----	4	12"	2'- 6"	2'- 8"	4'-11"	4	12"	4'- 0"	4	12"	4'- 0"
5	4	8"	8"	8"	8"	10	10'- 0"	10	10'- 0"	2	2'- 0"	4	12"	10'- 8"	4	12"	11'- 8"	--	---	-----	-----	4	12"	2'- 6"	3'- 2"	5'- 5"	4	12"	5'- 0"	4	12"	5'- 0"
5	5	8"	8"	8"	8"	10	10'- 0"	10	10'- 0"	3	3'- 0"	4	12"	10'- 8"	4	12"	11'- 8"	--	---	-----	-----	4	12"	2'- 6"	3'- 8"	5'-11"	4	12"	6'- 0"	4	12"	6'- 0"
5	6	8"	8"	8"	8"	10	10'- 0"	10	10'- 0"	4	4'- 0"	4	12"	10'- 8"	4	12"	11'- 8"	--	---	-----	-----	4	12"	2'- 6"	4'- 2"	6'- 5"	4	12"	7'- 0"	4	12"	7'- 0"
5	7	8"	8"	8"	8"	10	10'- 0"	10	10'- 0"	5	5'- 0"	4	12"	10'- 8"	4	12"	11'- 8"	--	---	-----	-----	4	12"	2'- 6"	4'- 8"	6'-11"	4	12"	8'- 0"	4	12"	8'- 0"
6	4	8"	8"	8"	8"	12	12'- 0"	12	12'- 0"	2	2'- 0"	4	12"	12'- 7"	4	12"	13'- 8"	--	---	-----	-----	4	12"	2'- 8⅜"	3'- 2"	5'- 7"	4	12"	5'- 0"	4	12"	5'- 0"
6	5	8"	8"	8"	8"	12	12'- 0"	12	12'- 0"	3	3'- 0"	4	12"	12'- 7"	4	12"	13'- 8"	--	---	-----	-----	4	12"	2'- 8⅜"	3'- 8"	6'- 1"	4	12"	6'- 0"	4	12"	6'- 0"
6	6	8"	8"	8"	8"	12	12'- 0"	12	12'- 0"	4	4'- 0"	4	12"	12'- 7"	4	12"	13'- 8"	--	---	-----	-----	4	12"	2'- 8⅜"	4'- 2"	6'- 7"	4	12"	7'- 0"	4	12"	7'- 0"
6	7	8"	8"	8"	8"	12	12'- 0"	12	12'- 0"	5	5'- 0"	4	12"	12'- 7"	4	12"	13'- 8"	--	---	-----	-----	4	12"	2'- 8⅜"	4'- 8"	7'- 1"	4	12"	8'- 0"	4	12"	8'- 0"
6	8	8"	8"	8"	8"	12	12'- 0"	12	12'- 0"	6	6'- 0"	4	12"	12'- 7"	4	12"	13'- 8"	3	12"	3'- 2"	6'- 2"	4	12"	2'- 8⅜"	5'- 2"	7'- 7"	4	12"	9'- 0"	4	12"	9'- 0"
7	4	8"	8"	8"	8"	14	14'- 0"	14	14'- 0"	2	2'- 0"	4	12"	14'- 7"	4	12"	15'- 8"	--	---	-----	-----	5	12"	2'-10¾"	3'- 2"	5'- 9"	4	12"	5'- 0"	4	12"	5'- 0"
7	6	8"	8"	8"	8"	14	14'- 0"	14	14'- 0"	4	4'- 0"	4	12"	14'- 7"	4	12"	15'- 8"	4	12"	2'-10¾"	5'- 6"	4	12"	2'-10¾"	4'- 2"	6'-10"	4	12"	7'- 0"	4	12"	7'- 0"
7	8	8"	8"	8"	8"	14	14'- 0"	14	14'- 0"	6	6'- 0"	4	12"	14'- 7"	4	12"	15'- 8"	4	12"	3'- 2"	6'- 2"	4	12"	2'-10¾"	5'- 2"	7'-10"	4	12"	9'- 0"	4	12"	9'- 0"
7	10	8"	8"	8"	8"	14	14'- 0"	14	14'- 0"	8	8'- 0"	4	11"	14'- 7"	4	11"	15'- 8"	--	---	-----	-----	5	11"	2'-10¾"	6'- 2"	8'- 9"	5	10"	11'- 0"	4	12"	11'- 0"
8	4	8¼"	8¼"	8"	8"	16	16'- 0"	16	16'- 0"	2	2'- 0"	4	10"	16'- 7"	4	10"	17'- 8"	--	---	-----	-----	5	10"	3'- 1¼"	3'- 2¼"	6'- 0"	4	9"	5'- 0"	4	12"	5'- 0"
8	6	8½"	8½"	8"	8"	16	16'- 0"	16	16'- 0"	4	4'- 0"	4	10"	16'- 7"	4	10"	17'- 8"	3	10"	3'- 1¼"	6'- 0"	4	10"	3'- 1¼"	4'- 2½"	7'- 1"	4	12"	7'- 1"	4	12"	7'- 1"
8	8	8¾"	8¾"	8"	8"	16	16'- 0"	16	16'- 0"	6	6'- 0"	4	9"	16'- 7"	4	9"	17'- 8"	3	9"	3'- 1¼"	6'- 0"	4	9"	3'- 1¼"	5'- 2¾"	8'- 1"	4	12"	9'- 2"	4	12"	9'- 2"
8	10	9"	9"	8"	8"	16	16'- 0"	16	16'- 0"	8	8'- 0"	5	10"	16'- 7"	4	10"	17'- 8"	--	---	-----	-----	5	10"	3'- 1¼"	6'- 3"	9'- 0"	5	11"	11'- 2"	4	12"	11'- 2"
9	4	9¼"	9¼"	8"	8"	18	18'- 0"	18	18'- 0"	2	2'- 0"	5	9"	18'- 7"	4	9"	19'- 8"	4	9"	3'- 3⅝"	6'- 4"	4	9"	3'- 3⅝"	3'- 3¼"	6'- 4"	4	8½"	5'- 2"	4	12"	5'- 2"
9	6	9½"	9½"	8"	8"	18	18'- 0"	18	18'- 0"	4	4'- 0"	5	9"	18'- 7"	4	9"	19'- 8"	3	9"	3'- 3⅝"	6'- 5"	4	9"	3'- 3⅝"	4'- 3½"	7'- 4"	4	12"	7'- 3"	4	12"	7'- 3"
9	8	9¾"	9¾"	8"	8"	18	18'- 0"	18	18'- 0"	6	6'- 0"	5	9"	18'- 7"	4	9"	19'- 8"	3	9"	3'- 3⅝"	6'- 5"	4	9"	3'- 3⅝"	5'- 3¾"	8'- 4"	4	12"	9'- 3"	4	12"	9'- 3"
9	10	9¾"	9¾"	8"	8"	18	18'- 0"	18	18'- 0"	8	8'- 0"	5	9"	18'- 7"	4	9"	19'- 8"	4	9"	3'- 8"	6'-11"	4	9"	3'- 3⅝"	6'- 3¾"	9'- 4"	5	12"	11'- 3"	4	12"	11'- 3"
9	12	10"	10"	8"	8"	18	18'- 0"	18	18'- 0"	10	10'- 0"	5	8"	18'- 7"	4	8"	19'- 8"	4	8"	4'- 1"	7'-11"	4	8"	3'- 3⅝"	7'- 4"	10'- 4"	5	7"	13'- 4"	4	12"	13'- 4"
10	4	10"	10"	8"	8"	20	20'- 0"	20	20'- 0"	2	2'- 0"	5	8"	20'- 4"	4	8"	21'- 8"	4	8"	3'- 6"	6'- 9"	4	8"	3'- 6"	3'- 4"	6'- 7"	4	8"	5'- 4"	4	12"	5'- 4"
10	6	10¼"	10¼"	8"	8"	20	20'- 0"	20	20'- 0"	4	4'- 0"	5	9"	20'- 4"	5	9"	21'- 8"	--	---	-----	-----	5	9"	3'- 6"	4'- 4¼"	7'- 6"	4	12"	7'- 5"	4	12"	7'- 5"
10	8	10½"	10½"	8"	8"	20	20'- 0"	20	20'- 0"	6	6'- 0"	5	9"	20'- 4"	5	9"	21'- 8"	--	---	-----	-----	5	9"	3'- 6"	5'- 4½"	8'- 7"	4	12"	9'- 5"	4	12"	9'- 5"
10	10	10¾"	10¾"	8"	8"	20	20'- 0"	20	20'- 0"	8	8'- 0"	5	10"	20'- 4"	5	10"	21'- 8"	3	10"	3'- 9"	7'- 4"	5	10"	3'- 6"	6'- 4¾"	9'- 7"	5	12"	11'- 5"	4	12"	11'- 5"
10	12	10¾"	10¾"	8"	8"	20	20'- 0"	20	20'- 0"	10	10'- 0"	5	10"	20'- 4"	5	10"	21'- 8"	4	10"	4'- 1"	7'-11"	5	10"	3'- 6"	7'- 4¾"	10'- 7"	5	6"	13'- 5"	4	12"	13'- 5"
12	6	12"	12"	8"	8"	24	24'- 0"	24	24'- 0"	4	4'- 0"	6	9"	24'- 7"	5	9"	25'- 8"	4	9"	3'-10¾"	7'- 6"	4	9"	3'-10¾"	4'- 6"	8'- 2"	4	11"	7'- 8"	4	12"	7'- 8"
12	8	12¼"	12¼"	8"	8"	24	24'- 0"	24	24'- 0"	6	6'- 0"	6	9"	24'- 7"	5	9"	25'- 8"	4	9"	3'-10¾"	7'- 6"	4	9"	3'-10¾"	5'- 6¼"	9'- 2"	4	12"	9'- 9"	4	12"	9'- 9"
12	10	12½"	12½"	8"	8"	24	24'- 0"	24	24'- 0"	8	8'- 0"	6	9"	24'- 7"	5	9"	25'- 8"	--	---	-----	-----	5	9"	3'-10¾"	6'- 6½"	10'- 1"	5	12"	11'- 9"	4	12"	11'- 9"
12	12	12½"	12½"	8"	8"	24	24'- 0"	24	24'- 0"	10	10'- 0"	6	9"	24'- 7"	6	9"	25'- 8"	--	---	-----	-----	6	9"	4'- 5"	7'-10"	11'-10"	5	8"	13'- 9"	4	12"	13'- 9"

A COPY OF THE ORIGINAL SEALED AND SIGNED DRAWING IS ON FILE IN THE CENTRAL OFFICE.

VDOT
ROAD AND BRIDGE STANDARDS

SHEET 1 OF 2 | REVISION DATE
1003.09 | 07/11

DOUBLE BOX CULVERTS

5 TO 10 FT. FILLS

VIRGINIA DEPARTMENT OF TRANSPORTATION

SPECIFICATION REFERENCE

BCD-10

FOR TYPICAL SECTION, NOTES AND OTHER DETAILS, REFER TO STANDARD BCD-DT.

SPAN (FT.)	HGHT (FT.)	REINFORCING STEEL BT1 SIZE	SPACING c-c	a	b	c	d	e	f	g	LENGTH	NO. BL1 #4 BARS	NO. BL2 #3 BARS	REINFORCING STEEL (LBS/LONG. JT)	QUAN./LF CONCRETE CLASS A4 (CY/LF)	REINFORCING STEEL (LBS/LF)	HEADWALLS G HEADWALL LENGTH	HW1 SIZE	HW1 LENGTH	NO. HW2 BARS	NO. HW3 BARS	INLET CONCRETE CL. A4 (CY)	INLET REINFORCING STEEL (LBS)	OUTLET CONCRETE CL. A4 (CY)	OUTLET REINFORCING STEEL (LBS)	WINGWALL
3	3	4	12"	2'- 8 7/8"	0'- 4 1/2"	1'- 6 5/8"	0'- 5 7/8"	0'- 3 3/4"	7'- 7 7/8"	-----	7'-11"	32	12	30.956	0.695	79.439	9'- 6"	6	9'- 2"	1	4	1.433	67.988	1.425	55.073	A
3	4	4	12"	2'- 8 7/8"	0'- 4 1/2"	1'- 6 5/8"	0'- 5 7/8"	0'- 3 3/4"	7'- 7 7/8"	-----	7'-11"	32	18	33.074	0.768	85.703	9'- 6"	6	9'- 2"	1	5	1.531	71.439	1.517	55.073	C
4	3	4	12"	3'- 6 1/2"	0'- 4 1/2"	1'-11 1/2"	0'- 5 7/8"	0'- 3 3/4"	9'- 8"	-----	9'-11"	40	12	37.636	0.792	92.688	11'- 6"	6	11'- 2"	1	4	1.635	80.004	1.634	67.089	A
4	4	4	12"	3'- 6 1/2"	0'- 4 1/2"	1'-11 1/2"	0'- 5 7/8"	0'- 3 3/4"	9'- 8"	-----	9'-11"	40	18	39.754	0.866	98.952	11'- 6"	6	11'- 2"	1	5	1.734	83.455	1.726	67.089	C
4	5	4	12"	3'- 6 1/2"	0'- 4 1/2"	1'-11 1/2"	0'- 5 7/8"	0'- 3 3/4"	9'- 8"	-----	9'-11"	40	24	41.872	0.940	105.216	11'- 6"	6	11'- 2"	1	6	1.833	86.907	1.819	67.089	E
4	6	4	12"	3'- 6 1/2"	0'- 4 1/2"	1'-11 1/2"	0'- 5 7/8"	0'- 3 3/4"	9'- 8"	-----	9'-11"	40	30	43.990	1.013	111.480	11'- 6"	6	11'- 2"	1	7	1.932	90.358	1.912	67.089	G
5	3	3	12"	4'- 4"	0'- 4 3/8"	2'- 4 1/8"	0'- 5 7/8"	0'- 3 7/8"	11'- 7 7/8"	-----	11'-11"	48	12	44.316	0.891	99.200	13'- 6"	6	13'- 2"	1	4	1.837	92.020	1.843	79.105	A
5	4	3	12"	4'- 4"	0'- 4 3/8"	2'- 4 1/8"	0'- 5 7/8"	0'- 3 7/8"	11'- 7 7/8"	-----	11'-11"	48	18	46.434	0.964	105.464	13'- 6"	6	13'- 2"	1	5	1.936	95.471	1.935	79.105	C
5	5	4	12"	4'- 4 1/8"	0'- 4 1/2"	2'- 4 1/4"	0'- 5 7/8"	0'- 3 3/4"	11'- 8"	-----	11'-11"	48	24	48.552	1.037	118.687	13'- 6"	6	13'- 2"	1	6	2.035	98.923	2.028	79.105	E
5	6	4	12"	4'- 4 1/8"	0'- 4 1/2"	2'- 4 1/4"	0'- 5 7/8"	0'- 3 3/4"	11'- 8"	-----	11'-11"	48	30	50.670	1.111	124.951	13'- 6"	6	13'- 2"	1	7	2.134	102.374	2.121	79.105	G
5	7	4	12"	4'- 4 1/8"	0'- 4 1/2"	2'- 4 1/4"	0'- 5 7/8"	0'- 3 3/4"	11'- 8"	-----	11'-11"	48	36	52.788	1.185	131.215	13'- 6"	6	13'- 2"	1	8	2.233	105.825	2.214	79.105	I
6	4	4	12"	5'- 1 3/4"	0'- 4 1/2"	2'- 9"	0'- 5 7/8"	0'- 3 3/4"	13'- 8"	-----	13'-11"	56	18	53.114	1.061	129.872	15'- 6"	6	15'- 2"	1	5	2.138	107.487	2.144	91.121	C
6	5	4	12"	5'- 1 3/4"	0'- 4 1/2"	2'- 9"	0'- 5 7/8"	0'- 3 3/4"	13'- 8"	-----	13'-11"	56	24	55.232	1.135	136.324	15'- 6"	6	15'- 2"	1	6	2.237	110.939	2.237	91.121	E
6	6	4	12"	5'- 1 3/4"	0'- 4 1/2"	2'- 9"	0'- 5 7/8"	0'- 3 3/4"	13'- 8"	-----	13'-11"	56	30	57.350	1.208	142.777	15'- 6"	6	15'- 2"	1	7	2.336	114.390	2.330	91.121	G
6	7	4	12"	5'- 1 3/4"	0'- 4 1/2"	2'- 9"	0'- 5 7/8"	0'- 3 3/4"	13'- 8"	-----	13'-11"	56	36	59.468	1.282	149.229	15'- 6"	6	15'- 2"	1	8	2.435	117.841	2.423	91.121	I
6	8	4	12"	5'- 1 3/4"	0'- 4 1/2"	2'- 9"	0'- 5 7/8"	0'- 3 3/4"	13'- 8"	-----	13'-11"	56	42	61.586	1.355	164.914	15'- 6"	6	15'- 2"	1	9	2.534	121.293	2.515	91.121	K
7	4	4	12"	5'-11 3/8"	0'- 4 1/2"	3'- 1 7/8"	0'- 5 7/8"	0'- 3 3/4"	15'- 8 1/8"	-----	15'-11"	64	18	59.794	1.158	152.712	17'- 6"	6	17'- 2"	1	5	2.341	119.503	2.353	103.137	C
7	6	4	12"	5'-11 3/8"	0'- 4 1/2"	3'- 1 7/8"	0'- 5 7/8"	0'- 3 3/4"	15'- 8 1/8"	-----	15'-11"	64	30	64.030	1.305	172.209	17'- 6"	6	17'- 2"	1	7	2.539	126.406	2.539	103.137	G
7	8	4	12"	5'-11 3/8"	0'- 4 1/2"	3'- 1 7/8"	0'- 5 7/8"	0'- 3 3/4"	15'- 8 1/8"	-----	15'-11"	64	42	68.266	1.452	186.929	17'- 6"	6	17'- 2"	1	9	2.736	133.309	2.724	103.137	K
7	10	4	11"	5'-11 3/8"	0'- 4 1/2"	3'- 1 7/8"	0'- 5 7/8"	0'- 3 3/4"	15'- 8 1/8"	-----	15'-11"	64	54	72.502	1.598	218.493	17'- 6"	6	17'- 2"	1	11	2.934	140.211	2.910	103.137	O
8	4	4	10"	6'- 8 3/4"	0'- 4 3/4"	3'- 6 3/8"	0'- 6 1/4"	0'- 4"	17'- 7 7/8"	-----	17'-11"	72	18	66.474	1.282	189.026	19'- 6"	6	19'- 2"	1	5	2.534	131.519	2.553	115.153	C
8	6	4	10"	6'- 8 5/8"	0'- 5"	3'- 6 1/8"	0'- 6 1/2"	0'- 4 1/4"	17'- 7 7/8"	-----	17'-11"	72	30	70.710	1.457	200.594	19'- 6"	6	19'- 2"	1	7	2.723	138.422	2.730	115.153	G
8	8	4	9"	6'- 8 1/2"	0'- 5 1/4"	3'- 5 7/8"	0'- 6 7/8"	0'- 4 1/2"	17'- 7 7/8"	-----	18'- 0"	72	42	74.946	1.631	230.003	19'- 6"	6	19'- 2"	1	9	2.912	145.325	2.906	115.153	K
8	10	4	10"	6'- 8 3/8"	0'- 5 1/2"	3'- 5 5/8"	0'- 7 1/4"	0'- 4 3/4"	17'- 7 7/8"	-----	18'- 0"	72	54	79.182	1.805	258.190	19'- 6"	6	19'- 2"	1	11	3.101	152.227	3.083	115.153	O
9	4	4	9"	7'- 5 7/8"	0'- 5 3/4"	3'-10 1/4"	0'- 7 5/8"	0'- 5"	19'- 8"	-----	20'- 0"	80	18	73.154	1.503	250.774	21'- 6"	6	21'- 2"	1	5	2.711	143.535	2.737	127.169	D
9	6	4	9"	7'- 5 3/4"	0'- 6"	3'-10"	0'- 8"	0'- 5 1/4"	19'- 8"	-----	20'- 0"	80	30	77.390	1.682	251.871	21'- 6"	6	21'- 2"	1	7	2.899	150.438	2.912	127.169	H
9	8	4	9"	7'- 5 5/8"	0'- 6 1/4"	3'- 9 3/4"	0'- 8 3/8"	0'- 5 1/2"	19'- 8"	-----	20'- 1"	80	42	81.626	1.860	266.494	21'- 6"	6	21'- 2"	1	9	3.086	157.341	3.087	127.169	L
9	10	4	9"	7'- 5 5/8"	0'- 6 1/4"	3'- 9 3/4"	0'- 8 3/8"	0'- 5 1/2"	19'- 8"	-----	20'- 1"	80	54	85.862	2.005	301.091	21'- 6"	6	21'- 2"	1	11	3.284	164.243	3.272	127.169	P
9	12	4	8"	7'- 5 1/2"	0'- 6 1/2"	3'- 9 1/2"	0'- 8 5/8"	0'- 5 3/4"	19'- 8"	-----	20'- 1"	80	66	90.098	2.179	363.528	21'- 6"	6	21'- 2"	1	13	3.471	171.146	3.447	127.169	T
10	4	4	8"	8'- 3 1/8"	0'- 6 1/2"	4'- 2 1/4"	0'- 8 5/8"	0'- 5 3/4"	21'- 8"	-----	22'- 1"	88	18	79.834	1.715	295.784	23'- 6"	6	23'- 2"	1	5	2.870	155.551	2.902	139.185	D
10	6	5	9"	8'- 3"	0'- 6 7/8"	4'- 2"	0'- 9 1/8"	0'- 6"	21'- 8"	-----	22'- 1"	88	30	84.070	1.896	317.091	23'- 6"	6	23'- 2"	1	7	3.055	162.454	3.075	139.185	H
10	8	5	9"	8'- 2 7/8"	0'- 7 1/8"	4'- 1 3/4"	0'- 9 1/2"	0'- 6 1/4"	21'- 8"	-----	22'- 1"	88	42	88.306	2.077	334.039	23'- 6"	6	23'- 2"	1	9	3.241	169.357	3.249	139.185	L
10	10	5	10"	8'- 2 3/4"	0'- 7 3/8"	4'- 1 1/2"	0'- 9 7/8"	0'- 6 1/2"	21'- 8"	-----	22'- 1"	88	54	92.542	2.258	344.909	23'- 6"	6	23'- 2"	1	11	3.427	176.259	3.422	139.185	P
10	12	5	10"	8'- 2 3/4"	0'- 7 3/8"	4'- 1 1/2"	0'- 9 7/8"	0'- 6 1/2"	21'- 8"	-----	22'- 1"	88	66	96.778	2.402	403.179	23'- 6"	6	23'- 2"	1	13	3.625	183.162	3.608	139.185	T
12	6	5	9"	9'- 9 3/8"	0'- 8 5/8"	4'- 9 7/8"	0'-11 5/8"	0'- 7 3/4"	25'- 8 1/8"	-----	26'- 2"	104	30	97.430	2.423	407.615	27'- 6"	6	27'- 2"	1	7	3.326	186.486	3.359	163.217	H
12	8	5	9"	9'- 9 1/4"	0'- 8 7/8"	4'- 9 5/8"	1'- 0"	0'- 8"	25'- 8 1/8"	-----	26'- 3"	104	42	101.666	2.610	420.889	27'- 6"	6	27'- 2"	1	9	3.509	193.389	3.530	163.217	L
12	10	5	9"	9'- 9 1/8"	0'- 9 1/8"	4'- 9 3/8"	1'- 1/4"	0'- 8 1/4"	25'- 8 1/8"	-----	26'- 3"	104	54	105.902	2.797	434.886	27'- 6"	6	27'- 2"	1	11	3.691	200.291	3.700	163.217	P
12	12	5	9"	9'- 9 1/8"	0'- 9 1/8"	4'- 9 3/8"	1'- 1/4"	0'- 8 1/4"	25'- 8 1/8"	-----	26'- 3"	104	66	110.138	2.938	531.734	27'- 6"	6	27'- 2"	1	13	3.889	207.194	3.885	163.217	T

A COPY OF THE ORIGINAL SEALED AND SIGNED DRAWING IS ON FILE IN THE CENTRAL OFFICE.

SPECIFICATION REFERENCE

DOUBLE BOX CULVERTS

5 TO 10 FT. FILLS

VIRGINIA DEPARTMENT OF TRANSPORTATION

VDOT

ROAD AND BRIDGE STANDARDS

REVISION DATE 07/11

SHEET 2 OF 2

1003.10

BCD-20

FOR TYPICAL SECTION, NOTES AND OTHER DETAILS, REFER TO STANDARD BCD-DT.

DIMENSIONS						REINFORCING STEEL																										
SPAN	HGHT	T1	T2	T3	T4							BH1			BH2			BH3				BH4					BV1			BV2		
(FT.)	(FT.)	TOP SLAB	BOTTOM SLAB	EXTERIOR WALL (IN.)	INTERIOR WALL (IN.)	A	B	C	D	E	F	SIZE	SPACING C-C	LENGTH	SIZE	SPACING C-C	LENGTH	SIZE	SPACING C-C	a	LENGTH	SIZE	SPACING C-C	a	b	LENGTH	SIZE	SPACING C-C	LENGTH	SIZE	SPACING C-C	LENGTH
3	3	8"	8"	8"	8"	6	6'- 0"	6	6'- 0"	1	1'- 0"	4	12"	6'- 7"	4	12"	7'- 8"	--	---	-----	-----	4	12"	2'- 4"	2'- 9"	4'- 9"	4	12"	4'- 0"	4	12"	4'- 0"
3	4	8"	8"	8"	8"	6	6'- 0"	6	6'- 0"	2	2'- 0"	4	12"	6'- 7"	4	12"	7'- 8"	--	---	-----	-----	4	12"	2'- 4"	3'- 3"	5'- 3"	4	12"	5'- 0"	4	12"	5'- 0"
4	3	8"	8"	8"	8"	8	8'- 0"	8	8'- 0"	1	1'- 0"	4	12"	8'- 7"	4	12"	9'- 8"	--	---	-----	-----	4	12"	2'- 4"	2'- 9"	4'- 9"	4	12"	4'- 0"	4	12"	4'- 0"
4	4	8"	8"	8"	8"	8	8'- 0"	8	8'- 0"	2	2'- 0"	4	12"	8'- 7"	4	12"	9'- 8"	--	---	-----	-----	4	12"	2'- 4"	3'- 3"	5'- 3"	4	12"	5'- 0"	4	12"	5'- 0"
4	5	8"	8"	8"	8"	8	8'- 0"	8	8'- 0"	3	3'- 0"	4	12"	8'- 7"	4	12"	9'- 8"	--	---	-----	-----	4	12"	2'- 4"	3'- 9"	5'- 9"	4	12"	6'- 0"	4	12"	6'- 0"
4	6	8"	8"	8"	8"	8	8'- 0"	8	8'- 0"	4	4'- 0"	4	12"	8'- 7"	4	12"	9'- 8"	--	---	-----	-----	4	12"	2'- 4"	4'- 3"	6'- 3"	4	12"	7'- 0"	4	12"	7'- 0"
5	3	8"	8"	8"	8"	10	10'- 0"	10	10'- 0"	1	1'- 0"	4	12"	10'- 7"	4	12"	11'- 8"	4	12"	2'- 6"	4'- 9"	4	12"	2'- 4"	2'- 9"	4'- 9"	4	12"	4'- 0"	4	12"	4'- 0"
5	4	8"	8"	8"	8"	10	10'- 0"	10	10'- 0"	2	2'- 0"	4	12"	10'- 7"	4	12"	11'- 8"	3	12"	2'- 6"	4'-10"	4	12"	2'- 4"	3'- 3"	5'- 3"	4	12"	5'- 0"	4	12"	5'- 0"
5	5	8"	8"	8"	8"	10	10'- 0"	10	10'- 0"	3	3'- 0"	4	12"	10'- 7"	4	12"	11'- 8"	3	12"	2'- 6"	4'-10"	4	12"	2'- 4"	3'- 9"	5'- 9"	4	12"	6'- 0"	4	12"	6'- 0"
5	6	8"	8"	8"	8"	10	10'- 0"	10	10'- 0"	4	4'- 0"	4	12"	10'- 7"	4	12"	11'- 8"	3	12"	2'- 9"	5'-3"	4	12"	2'- 4"	4'- 3"	6'- 3"	4	12"	7'- 0"	4	12"	7'- 0"
5	7	8"	8"	8"	8"	10	10'- 0"	10	10'- 0"	5	5'- 0"	4	12"	10'- 7"	4	12"	11'- 8"	4	12"	2'- 11"	5'- 7"	4	12"	2'- 4"	4'- 9"	6'- 9"	5	12"	8'- 0"	4	12"	8'- 0"
6	4	9¼"	9¼"	8"	8"	12	12'- 0"	12	12'- 0"	2	2'- 0"	4	12"	12'- 7"	4	12"	13'- 8"	4	12"	2'- 9"	5'- 2"	4	12"	2'- 4"	3'- 4"	5'- 4"	4	12"	5'- 2"	4	12"	5'- 2"
6	5	9½"	9½"	8"	8"	12	12'- 0"	12	12'- 0"	3	3'- 0"	4	12"	12'- 7"	4	12"	13'- 8"	4	12"	2'- 9"	5'- 2"	4	12"	2'- 4"	3'- 10"	5'- 10"	4	12"	6'- 3"	4	12"	6'- 3"
6	6	9½"	9½"	8"	8"	12	12'- 0"	12	12'- 0"	4	4'- 0"	4	12"	12'- 7"	4	12"	13'- 8"	4	12"	2'- 10"	5'- 5"	4	12"	2'- 4"	4'- 4"	6'- 4"	4	12"	7'- 3"	4	12"	7'- 3"
6	7	9½"	9½"	8"	8"	12	12'- 0"	12	12'- 0"	5	5'- 0"	4	12"	12'- 7"	4	12"	13'- 8"	4	12"	3'- 1"	5'- 10"	4	12"	2'- 4"	4'- 10"	6'- 10"	5	12"	8'- 3"	4	12"	8'- 3"
6	8	9¾"	9¾"	8"	8"	12	12'- 0"	12	12'- 0"	6	6'- 0"	4	12"	12'- 7"	4	12"	13'- 8"	4	12"	3'- 3"	6'- 3"	4	12"	2'- 4"	5'- 4"	7'- 5"	5	12"	9'- 3"	4	12"	9'- 3"
7	4	10½"	10½"	8"	8"	14	14'- 0"	14	14'- 0"	2	2'- 0"	4	10"	14'- 7"	4	10"	15'- 8"	3	10"	2'- 11"	5'- 8"	4	10"	2'- 4"	3'- 5"	5'- 5"	4	12"	5'- 5"	4	12"	5'- 5"
7	6	10¾"	10¾"	8"	8"	14	14'- 0"	14	14'- 0"	4	4'- 0"	4	10"	14'- 7"	4	10"	15'- 8"	--	---	-----	-----	4	10"	2'- 4"	4'- 5"	6'- 6"	4	12"	7'- 5"	4	12"	7'- 5"
7	8	11"	11"	8"	8"	14	14'- 0"	14	14'- 0"	6	6'- 0"	4	10"	14'- 7"	4	10"	15'- 8"	3	10"	3'- 5"	6'- 7"	4	10"	2'- 4"	5'- 6"	7'- 6"	5	12"	9'- 6"	4	12"	9'- 6"
7	10	11¼"	11¼"	8"	8"	14	14'- 0"	14	14'- 0"	8	8'- 0"	4	10"	14'- 4"	4	10"	15'- 8"	3	10"	3'-10"	7'- 5"	5	10"	2'- 6"	6'- 8"	8'- 9"	6	10½"	11'- 6"	4	12"	11'- 6"
8	4	11¾"	11¾"	8"	8"	16	16'- 0"	16	16'- 0"	2	2'- 0"	5	9"	16'- 7"	4	9"	17'- 8"	3	9"	3'- 2"	6'- 1"	4	9"	2'- 9"	3'- 6"	6'- 0"	4	12"	5'- 7"	4	12"	5'- 7"
8	6	12"	12"	8"	8"	16	16'- 0"	16	16'- 0"	4	4'- 0"	5	9"	16'- 7"	4	9"	17'- 8"	--	---	-----	-----	4	9"	2'- 9"	4'- 6"	7'- 0"	4	12"	7'- 8"	4	12"	7'- 8"
8	8	12¼"	12¼"	8"	8"	16	16'- 0"	16	16'- 0"	6	6'- 0"	5	9"	16'- 7"	4	9"	17'- 8"	3	9"	3'- 6"	6'- 9"	4	9"	2'- 9"	5'- 7"	8'- 0"	5	12"	9'- 8"	4	12"	9'- 8"
8	10	12½"	12½"	8"	8"	16	16'- 0"	16	16'- 0"	8	8'- 0"	5	9"	16'- 7"	4	9"	17'- 8"	4	9"	3'- 11"	7'- 6"	4	9"	2'- 9"	6'- 7"	9'- 0"	5	7"	11'- 9"	4	12"	11'- 9"
9	4	13"	13"	8"	8"	18	18'- 0"	18	18'- 0"	2	2'- 0"	5	9"	18'- 7"	5	9"	19'- 8"	3	9"	3'- 4"	6'- 5"	4	9"	2'- 9"	3'- 7"	6'- 1"	4	11½"	5'- 9"	4	12"	5'- 9"
9	6	13¼"	13¼"	8"	8"	18	18'- 0"	18	18'- 0"	4	4'- 0"	5	9"	18'- 7"	5	9"	19'- 8"	--	---	-----	-----	4	9"	2'- 9"	4'- 8"	7'- 1"	4	12"	7'-10"	4	12"	7'-10"
9	8	13¼"	13¼"	8"	8"	18	18'- 0"	18	18'- 0"	6	6'- 0"	5	9"	18'- 7"	5	9"	19'- 8"	3	9"	3'- 7"	6'- 11"	4	9"	2'- 9"	5'- 8"	8'- 1"	5	12"	9'-10"	4	12"	9'-10"
9	10	13½"	13½"	8"	8"	18	18'- 0"	18	18'- 0"	8	8'- 0"	5	9"	18'- 4"	5	9"	19'- 8"	3	9"	4'- 0"	7'- 9"	5	9"	2'- 11"	6'- 10"	9'- 4"	5	7½"	11'-11"	4	12"	11'-11"
9	12	13¾"	13¾"	9½"	8"	18	18'- 0"	18	18'- 0"	10	10'- 0"	5	9"	18'- 4"	5	9"	19'- 11"	3	9"	4'- 5"	8'- 7"	6	9"	3'- 0"	8'- 0"	10'- 7"	5	4½"	13'-11"	4	12"	13'-11"
10	4	14½"	14½"	8"	8"	20	20'- 0"	20	20'- 0"	2	2'- 0"	6	9"	20'- 7"	5	9"	21'- 8"	3	9"	3'- 6"	6'-10"	4	9"	3'- 2"	3'- 9"	6'- 7"	4	11½"	6'- 0"	4	12"	6'- 0"
10	6	15"	15"	8"	8"	20	20'- 0"	20	20'- 0"	4	4'- 0"	6	9"	20'- 7"	5	9"	21'- 8"	3	9"	3'- 6"	6'-10"	4	9"	3'- 2"	4'- 9"	7'- 8"	4	12"	8'- 2"	4	12"	8'- 2"
10	8	14¾"	14¾"	8"	8"	20	20'- 0"	20	20'- 0"	6	6'- 0"	6	9"	20'- 7"	5	9"	21'- 8"	3	9"	3'- 8"	7'- 2"	4	9"	3'- 2"	5'- 9"	8'- 8"	5	12"	10'- 1"	4	12"	10'- 1"
10	10	15"	15"	8"	8"	20	20'- 0"	20	20'- 0"	8	8'- 0"	6	9"	20'- 4"	5	9"	21'- 8"	3	9"	4'- 1"	8'- 0"	5	9"	3'- 4"	7'- 0"	9'- 11"	5	7½"	12'- 2"	4	12"	12'- 2"
10	12	15"	15"	9½"	8"	20	20'- 0"	20	20'- 0"	10	10'- 0"	6	9"	20'- 4"	5	9"	21'- 11"	3	9"	4'- 6"	8'- 10"	6	9"	3'- 5"	8'- 1"	11'- 1"	5	4½"	14'- 2"	4	12"	14'- 2"
12	6	17¾"	17¾"	8"	8"	24	24'- 0"	24	24'- 0"	4	4'- 0"	6	8"	24'- 7"	5	8"	25'- 8"	--	---	-----	-----	4	8"	3'- 2"	5'- 0"	7'- 11"	4	12"	8'- 7"	4	12"	8'- 7"
12	8	17¾"	17¾"	8"	8"	24	24'- 0"	24	24'- 0"	6	6'- 0"	6	8"	24'- 7"	5	8"	25'- 8"	--	---	-----	-----	4	8"	3'- 2"	6'- 0"	8'- 11"	5	12"	10'- 7"	4	12"	10'- 7"
12	10	18"	18"	8"	8"	24	24'- 0"	24	24'- 0"	8	8'- 0"	6	8"	24'- 7"	5	8"	25'- 8"	4	8"	4'- 4"	8'- 5"	4	8"	3'- 2"	7'- 0"	9'- 11"	5	7"	12'- 8"	4	12"	12'- 8"
12	12	18"	18"	9½"	8"	24	24'- 0"	24	24'- 0"	10	10'- 0"	6	8"	24'- 7"	5	8"	25'- 11"	4	8"	4'- 9"	9'- 3"	5	8"	3'- 4"	8'- 3"	11'- 2"	5	4½"	14'- 8"	4	11½"	14'- 8"

A COPY OF THE ORIGINAL SEALED AND SIGNED DRAWING IS ON FILE IN THE CENTRAL OFFICE.

VDOT
ROAD AND BRIDGE STANDARDS

SHEET 1 OF 2 | REVISION DATE
1003.11 | 07/11

DOUBLE BOX CULVERTS

10 TO 20 FT. FILLS

VIRGINIA DEPARTMENT OF TRANSPORTATION

SPECIFICATION REFERENCE

BCD-20

FOR TYPICAL SECTION, NOTES AND OTHER DETAILS, REFER TO STANDARD BCD-DT.

SPAN (FT.)	HGHT (FT.)	REINFORCING STEEL BT1 SIZE	SPACING c-c	a	b	c	d	e	f	g	LENGTH	NO. BL1 #4 BARS	NO. BL2 #3 BARS	REINFORCING STEEL (LBS/LONG. JT)	QUAN./LF CONCRETE CLASS A4 (CY/LF)	REINFORCING STEEL (LBS/LF)	HEADWALLS G HEADWALL LENGTH	HW1 SIZE	HW1 LENGTH	NO. HW2 BARS	NO. HW3 BARS	INLET CONCRETE CL. A4 (CY)	INLET REINFORCING STEEL (LBS)	OUTLET CONCRETE CL. A4 (CY)	OUTLET REINFORCING STEEL (LBS)	WINGWALL
3	3	4	12"	2'- 7"	0'- 4"	1'- 10"	0'- 5 1/8"	0'- 3 1/4"	7'- 8"	-----	7'-10"	32	12	30.956	0.695	78.691	9'- 6"	6	9'- 2"	1	4	1.433	67.988	1.425	55.073	A
3	4	4	12"	2'- 7"	0'- 4"	1'- 10"	0'- 5 1/8"	0'- 3 1/4"	7'- 8"	-----	7'-10"	32	18	33.065	0.768	84.955	9'- 6"	6	9'- 2"	1	5	1.531	71.439	1.517	55.073	C
4	3	4	12"	3'- 5"	0'- 4"	2'- 3"	0'- 5 1/8"	0'- 3 1/4"	9'- 8"	-----	9'-10"	40	12	37.636	0.792	92.051	11'- 6"	6	11'- 2"	1	4	1.635	80.004	1.634	67.089	A
4	4	4	12"	3'- 5"	0'- 4"	2'- 3"	0'- 5 1/8"	0'- 3 1/4"	9'- 8"	-----	9'-10"	40	18	39.745	0.866	98.315	11'- 6"	6	11'- 2"	1	5	1.734	83.455	1.726	67.089	C
4	5	4	12"	3'- 5"	0'- 4"	2'- 3"	0'- 5 1/8"	0'- 3 1/4"	9'- 8"	-----	9'-10"	40	24	41.860	0.940	104.579	11'- 6"	6	11'- 2"	1	6	1.833	86.907	1.819	67.089	E
4	6	4	12"	3'- 5"	0'- 4"	2'- 3"	0'- 5 1/8"	0'- 3 1/4"	9'- 8"	-----	9'-10"	40	30	43.975	1.013	110.843	11'- 6"	6	11'- 2"	1	7	1.932	90.358	1.912	67.089	G
5	3	4	12"	4'- 2"	0'- 4"	2'- 8"	0'- 5 1/8"	0'- 3 1/4"	11'- 8"	-----	11'-10"	48	12	44.310	0.891	98.023	13'- 6"	6	13'- 2"	1	4	1.837	92.020	1.843	79.105	A
5	4	4	12"	4'- 2"	0'- 4"	2'- 8"	0'- 5 1/8"	0'- 3 1/4"	11'- 8"	-----	11'-10"	48	18	46.425	0.965	98.856	13'- 6"	6	13'- 2"	1	5	1.936	95.471	1.935	79.105	C
5	5	4	12"	4'- 2"	0'- 4"	2'- 8"	0'- 5 1/8"	0'- 3 1/4"	11'- 8"	-----	11'-10"	48	24	48.540	1.038	105.120	13'- 6"	6	13'- 2"	1	6	2.035	98.923	2.028	79.105	E
5	6	4	12"	4'- 2"	0'- 4"	2'- 8"	0'- 5 1/8"	0'- 3 1/4"	11'- 8"	-----	11'-10"	48	30	50.655	1.112	111.986	13'- 6"	6	13'- 2"	1	7	2.134	102.374	2.121	79.105	G
5	7	4	12"	4'- 2"	0'- 4"	2'- 8"	0'- 5 1/8"	0'- 3 1/4"	11'- 8"	-----	11'-10"	48	36	52.770	1.185	131.216	13'- 6"	6	13'- 2"	1	8	2.233	105.825	2.214	79.105	I
6	4	4	12"	4'- 11"	0'- 5 1/4"	3'- 0"	0'- 7"	0'- 4 1/2"	13'- 8"	-----	13'-11"	56	18	53.105	1.168	139.704	15'- 6"	6	15'- 2"	1	5	2.127	107.487	2.133	91.121	D
6	5	4	12"	4'- 11"	0'- 5 1/2"	3'- 0"	0'- 7 1/4"	0'- 4 3/4"	13'- 8"	-----	13'-11"	56	24	55.220	1.264	146.158	15'- 6"	6	15'- 2"	1	6	2.220	110.939	2.220	91.121	F
6	6	4	12"	4'- 11"	0'- 5 1/2"	3'- 0"	0'- 7 1/4"	0'- 4 3/4"	13'- 8"	-----	13'-11"	56	30	57.335	1.337	153.090	15'- 6"	6	15'- 2"	1	7	2.319	114.390	2.313	91.121	H
6	7	4	12"	4'- 11"	0'- 5 1/2"	3'- 0"	0'- 7 1/4"	0'- 4 3/4"	13'- 8"	-----	13'-11"	56	36	59.450	1.410	166.611	15'- 6"	6	15'- 2"	1	8	2.418	117.841	2.406	91.121	J
6	8	4	12"	4'- 10"	0'- 5 3/4"	3'- 0"	0'- 7 5/8"	0'- 5"	13'- 8"	-----	14'- 0"	56	42	61.586	1.505	175.026	15'- 6"	6	15'- 2"	1	9	2.511	121.293	2.492	91.121	L
7	4	4	10"	5'- 7"	0'- 6 1/2"	3'- 5"	0'- 8 3/4"	0'- 5 3/4"	15'- 8"	-----	16'- 0"	64	18	59.785	1.404	165.663	17'- 6"	6	17'- 2"	1	5	2.285	119.503	2.297	103.137	D
7	6	4	10"	5'- 7"	0'- 6 3/4"	3'- 5"	0'- 9"	0'- 6"	15'- 8"	-----	16'- 0"	64	30	64.015	1.577	168.822	17'- 6"	6	17'- 2"	1	7	2.475	126.406	2.475	103.137	H
7	8	4	10"	5'- 7"	0'- 7"	3'- 5"	0'- 9 3/8"	0'- 6 1/4"	15'- 8"	-----	16'- 1"	64	42	68.245	1.747	200.948	17'- 6"	6	17'- 2"	1	9	2.666	133.309	2.653	103.137	L
7	10	4	10"	5'- 6"	0'- 7 1/4"	3'- 5"	0'- 9 3/4"	0'- 6 1/2"	15'- 8"	-----	16'- 1"	64	54	72.475	1.916	248.796	17'- 6"	6	17'- 2"	1	11	2.856	140.211	2.831	103.137	P
8	4	4	9"	6'- 3"	0'- 7 3/4"	3'- 10"	0'-10 1/2"	0'- 7"	17'- 8"	-----	18'- 1"	72	18	66.465	1.669	212.942	19'- 6"	6	19'- 2"	1	5	2.427	131.519	2.446	115.153	D
8	6	4	9"	6'- 3"	0'- 8"	3'- 10"	0'-10 7/8"	0'- 7 1/4"	17'- 8"	-----	18'- 1"	72	30	70.695	1.845	214.543	19'- 6"	6	19'- 2"	1	7	2.616	138.422	2.622	115.153	H
8	8	4	9"	6'- 3"	0'- 8 1/4"	3'- 10"	0'-11 1/8"	0'- 7 1/2"	17'- 8"	-----	18'- 2"	72	42	74.925	2.018	248.913	19'- 6"	6	19'- 2"	1	9	2.804	145.325	2.799	115.153	L
8	10	4	9"	6'- 3"	0'- 8 1/2"	3'- 10"	0'-11 1/2"	0'- 7 3/4"	17'- 8"	-----	18'- 2"	72	54	79.155	2.191	294.798	19'- 6"	6	19'- 2"	1	11	2.993	152.227	2.975	115.153	P
9	4	5	9"	7'- 0"	0'- 9"	4'- 3"	1'- 1/8"	0'- 8 1/8"	19'- 8"	-----	20'- 2"	80	18	73.145	1.964	273.054	21'- 6"	6	21'- 2"	1	5	2.553	143.535	2.579	127.169	D
9	6	5	9"	7'- 0"	0'- 9 1/4"	4'- 3"	1'- 1/2"	0'- 8 3/8"	19'- 8"	-----	20'- 2"	80	30	77.375	2.143	273.531	21'- 6"	6	21'- 2"	1	7	2.740	150.438	2.754	127.169	H
9	8	5	9"	7'- 0"	0'- 9 1/4"	4'- 3"	1'- 1/2"	0'- 8 3/8"	19'- 8"	-----	20'- 2"	80	42	81.605	2.288	308.145	21'- 6"	6	21'- 2"	1	9	2.938	157.341	2.939	127.169	L
9	10	5	9"	6'- 11"	0'- 9 1/2"	4'- 3"	1'- 7/8"	0'- 8 5/8"	19'- 8"	-----	20'- 3"	80	54	85.835	2.464	358.625	21'- 6"	6	21'- 2"	1	11	3.126	164.243	3.114	127.169	P
9	12	5	9"	7'- 1"	0'- 9 3/4"	4'- 3"	1'- 1 1/8"	0'- 8 7/8"	19'- 11"	-----	20'- 6"	80	66	90.065	2.769	439.648	21'- 6"	6	21'- 2"	1	13	3.313	171.146	3.289	127.169	T
10	4	5	9"	7'- 8"	0'-10 1/2"	4'- 8"	1'- 2 1/4"	0'- 9 5/8"	21'- 8"	-----	22'- 3"	88	18	79.825	2.324	323.981	23'- 6"	6	23'- 2"	1	5	2.652	155.551	2.685	139.185	D
10	6	5	9"	7'- 7"	0'-11"	4'- 8"	1'- 3"	0'-10 1/8"	21'- 8"	-----	22'- 4"	88	30	84.055	2.539	337.513	23'- 6"	6	23'- 2"	1	7	2.850	162.454	2.870	139.185	H
10	8	5	9"	7'- 8"	0'-10 3/4"	4'- 8"	1'- 2 5/8"	0'- 9 7/8"	21'- 8"	-----	22'- 4"	88	42	88.285	2.652	358.944	23'- 6"	6	23'- 2"	1	9	3.036	169.357	3.043	139.185	L
10	10	5	9"	7'- 7"	0'-11"	4'- 8"	1'- 3"	0'-10 1/8"	21'- 8"	-----	22'- 4"	88	54	92.515	2.830	410.490	23'- 6"	6	23'- 2"	1	11	3.221	176.259	3.217	139.185	P
10	12	5	9"	7'- 9"	0'-11"	4'- 8"	1'- 3"	0'-10 1/8"	21'- 11"	-----	22'- 7"	88	66	96.745	3.106	492.783	23'- 6"	6	23'- 2"	1	13	3.419	183.162	3.402	139.185	T
12	6	6	8"	9'- 0"	1'- 1 3/4"	5'- 5"	1'- 6 3/4"	1'- 3/4"	25'- 8"	-----	26'- 6"	104	30	97.415	3.343	445.840	27'- 6"	6	27'- 2"	1	7	2.996	186.486	3.029	163.217	I
12	8	6	8"	9'- 0"	1'- 1 3/4"	5'- 5"	1'- 6 3/4"	1'- 3/4"	25'- 8"	-----	26'- 6"	104	42	101.645	3.489	467.673	27'- 6"	6	27'- 2"	1	9	3.194	193.389	3.215	163.217	M
12	10	6	8"	9'- 0"	1'- 2"	5'- 5"	1'- 7 1/8"	1'- 1"	25'- 8"	-----	26'- 6"	104	54	105.875	3.672	535.887	27'- 6"	6	27'- 2"	1	11	3.376	200.291	3.385	163.217	Q
12	12	6	8"	9'- 2"	1'- 2"	5'- 5"	1'- 7 1/8"	1'- 1"	25'-11"	-----	26'- 9"	104	66	110.105	3.954	615.152	27'- 6"	6	27'- 2"	1	13	3.574	207.194	3.570	163.217	U

A COPY OF THE ORIGINAL SEALED AND SIGNED DRAWING IS ON FILE IN THE CENTRAL OFFICE.

SPECIFICATION REFERENCE

DOUBLE BOX CULVERTS

10 TO 20 FT. FILLS

VIRGINIA DEPARTMENT OF TRANSPORTATION

VDOT

ROAD AND BRIDGE STANDARDS

REVISION DATE 08/14

SHEET 2 OF 2

1003.12

BCD-30

FOR TYPICAL SECTION, NOTES AND OTHER DETAILS, REFER TO STANDARD BCD-DT.

DIMENSIONS						REINFORCING STEEL																										
SPAN	HGHT	T1	T2	T3	T4							BH1			BH2			BH3				BH4					BV1			BV2		
(FT.)	(FT.)	TOP SLAB	BOTTOM SLAB	EXTERIOR WALL (IN.)	INTERIOR WALL (IN.)	A	B	C	D	E	F	SIZE	SPACING C-C	LENGTH	SIZE	SPACING C-C	LENGTH	SIZE	SPACING C-C	a	LENGTH	SIZE	SPACING C-C	a	b	LENGTH	SIZE	SPACING C-C	LENGTH	SIZE	SPACING C-C	LENGTH
3	3	8"	8"	8"	8"	6	6'- 0"	6	6'- 0"	1	1'- 0"	4	12"	6'- 7"	4	12"	7'- 8"	--	---	-----	-----	4	12"	2'- 4"	2'- 9"	4'- 9"	4	12"	4'- 0"	4	12"	4'- 0"
3	4	8"	8"	8"	8"	6	6'- 0"	6	6'- 0"	2	2'- 0"	4	12"	6'- 7"	4	12"	7'- 8"	--	---	-----	-----	4	12"	2'- 4"	3'- 3"	5'- 3"	4	12"	5'- 0"	4	12"	5'- 0"
4	3	8½"	8½"	8"	8"	8	8'- 0"	8	8'- 0"	1	1'- 0"	4	12"	8'- 7"	4	12"	9'- 8"	--	---	-----	-----	4	12"	2'- 4"	2'- 9"	4'- 9"	4	12"	4'- 0"	4	12"	4'- 0"
4	4	8½"	8½"	8"	8"	8	8'- 0"	8	8'- 0"	2	2'- 0"	4	12"	8'- 7"	4	12"	9'- 8"	--	---	-----	-----	4	12"	2'- 4"	3'- 3"	5'- 3"	4	12"	5'- 0"	4	12"	5'- 0"
4	5	8¾"	8¾"	8"	8"	8	8'- 0"	8	8'- 0"	3	3'- 0"	4	12"	8'- 7"	4	12"	9'- 8"	--	---	-----	-----	4	12"	2'- 4"	3'- 9"	5'- 10"	4	12"	6'- 1"	4	12"	6'- 1"
4	6	8¾"	8¾"	8"	8"	8	8'- 0"	8	8'- 0"	4	4'- 0"	4	12"	8'- 7"	4	12"	9'- 8"	--	---	-----	-----	4	12"	2'- 4"	4'- 3"	6'- 4"	5	12"	7'- 1"	4	12"	7'- 1"
5	3	10¼"	10¼"	8"	8"	10	10'- 0"	10	10'- 0"	1	1'- 0"	4	12"	10'- 7"	4	12"	11'- 8"	--	---	-----	-----	4	12"	2'- 4"	2'- 11"	4'- 11"	4	12"	4'- 4"	4	12"	4'- 4"
5	4	10¼"	10¼"	8"	8"	10	10'- 0"	10	10'- 0"	2	2'- 0"	4	12"	10'- 7"	4	12"	11'- 8"	--	---	-----	-----	4	12"	2'- 4"	3'- 5"	5'- 5"	4	12"	5'- 4"	4	12"	5'- 4"
5	5	10¼"	10¼"	8"	8"	10	10'- 0"	10	10'- 0"	3	3'- 0"	4	12"	10'- 7"	4	12"	11'- 8"	--	---	-----	-----	4	12"	2'- 4"	3'- 11"	5'- 11"	4	12"	6'- 4"	4	12"	6'- 4"
5	6	10¼"	10¼"	8"	8"	10	10'- 0"	10	10'- 0"	4	4'- 0"	4	12"	10'- 7"	4	12"	11'- 8"	3	12"	2'- 11"	5'- 7"	4	12"	2'- 4"	4'- 5"	6'- 5"	5	12"	7'- 4"	4	12"	7'- 4"
5	7	10¼"	10¼"	8"	8"	10	10'- 0"	10	10'- 0"	5	5'- 0"	4	12"	10'- 7"	4	12"	11'- 8"	4	12"	3'- 2"	5'- 11"	4	12"	2'- 4"	4'- 11"	6'- 11"	5	12"	8'- 4"	4	12"	8'- 4"
6	4	12¼"	12¼"	8"	8"	12	12'- 0"	12	12'- 0"	2	2'- 0"	4	11"	12'- 7"	4	11"	13'- 8"	--	---	-----	-----	4	11"	2'- 4"	3'- 7"	5'- 7"	4	12"	5'- 8"	4	12"	5'- 8"
6	5	12¼"	12¼"	8"	8"	12	12'- 0"	12	12'- 0"	3	3'- 0"	4	11"	12'- 7"	4	11"	13'- 8"	--	---	-----	-----	4	11"	2'- 4"	4'- 1"	6'- 1"	4	12"	6'- 8"	4	12"	6'- 8"
6	6	12"	12"	8"	8"	12	12'- 0"	12	12'- 0"	4	4'- 0"	4	11"	12'- 7"	4	11"	13'- 8"	3	11"	3'- 1"	5'- 11"	4	11"	2'- 4"	4'- 6"	6'- 7"	4	12"	7'- 8"	4	12"	7'- 8"
6	7	12"	12"	8"	8"	12	12'- 0"	12	12'- 0"	5	5'- 0"	4	10"	12'- 7"	4	10"	13'- 8"	3	10"	3'- 3"	6'- 4"	4	10"	2'- 4"	5'- 0"	7'- 1"	5	12"	8'- 8"	4	12"	8'- 8"
6	8	12"	12"	8"	8"	12	12'- 0"	12	12'- 0"	6	6'- 0"	4	10"	12'- 4"	4	10"	13'- 8"	--	---	-----	-----	5	10"	2'- 6"	5'- 9"	7'- 10"	5	8"	9'- 8"	4	12"	9'- 8"
7	4	13¾"	13¾"	8"	8"	14	14'- 0"	14	14'- 0"	2	2'- 0"	5	9"	14'- 7"	4	9"	15'- 8"	--	---	-----	-----	4	9"	2'- 9"	3'- 8"	6'- 2"	4	12"	5'- 11"	4	12"	5'- 11"
7	6	13¾"	13¾"	8"	8"	14	14'- 0"	14	14'- 0"	4	4'- 0"	5	9"	14'- 7"	4	9"	15'- 8"	--	---	-----	-----	4	9"	2'- 9"	4'- 8"	7'- 2"	4	12"	7'- 11"	4	12"	7'- 11"
7	8	13¾"	13¾"	8"	8"	14	14'- 0"	14	14'- 0"	6	6'- 0"	5	9"	14'- 7"	4	9"	15'- 8"	3	9"	3'- 7"	7'- 0"	4	9"	2'- 9"	5'- 8"	8'- 2"	5	8½"	9'- 11"	4	12"	9'- 11"
7	10	13¾"	13¾"	9½"	8"	14	14'- 0"	14	14'- 0"	8	8'- 0"	5	9"	14'- 7"	4	9"	15'- 11"	3	9"	4'- 0"	7'-10"	5	9"	2'- 11"	6'- 10"	9'- 4"	5	5"	11'- 11"	4	12"	11'- 11"
8	4	15½"	15½"	8"	8"	16	16'- 0"	16	16'- 0"	2	2'- 0"	5	8"	16' -7"	4	8"	17'- 8"	--	---	-----	-----	4	8"	2'- 9"	3'-10"	6'- 3"	4	12"	6'- 3"	4	12"	6'- 3"
8	6	15½"	15½"	8"	8"	16	16'- 0"	16	16'- 0"	4	4'- 0"	5	8"	16'- 7"	4	8"	17'- 8"	--	---	-----	-----	4	8"	2'- 9"	4'-10"	7'- 3"	4	12"	8'- 3"	4	12"	8'- 3"
8	8	15½"	15½"	8"	8"	16	16'- 0"	16	16'- 0"	6	6'- 0"	5	8"	16'- 7"	4	8"	17'- 8"	3	8"	3'- 9"	7'- 4"	4	8"	2'- 9"	5'-10"	8'- 3"	5	8½"	10'- 3"	4	12"	10'- 3"
8	10	15½"	15½"	9"	8"	16	16'- 0"	16	16'- 0"	8	8'- 0"	5	8"	16'- 6"	4	8"	17'- 9"	3	8"	4'- 2"	8'- 1"	5	8"	2'- 11"	7'- 0"	9'- 6"	5	5"	12'- 3"	4	12"	12'- 3"
9	4	17¼"	17¼"	8"	8"	18	18'- 0"	18	18'- 0"	2	2'- 0"	6	9"	18'- 7"	5	9"	19'- 8"	--	---	-----	-----	4	9"	3'- 2"	4'- 0"	6'- 10"	4	12"	6'- 6"	4	11"	6'- 6"
9	6	17¼"	17¼"	8"	8"	18	18'- 0"	18	18'- 0"	4	4'- 0"	6	9"	18'- 7"	5	9"	19'- 8"	--	---	-----	-----	4	9"	3'- 2"	5'- 0"	7'- 10"	4	12"	8'- 6"	4	11"	8'- 6"
9	8	17½"	17½"	8"	8"	18	18'- 0"	18	18'- 0"	6	6'- 0"	6	9"	18"- 7"	5	9"	19'- 8"	3	9"	3'- 11"	7'- 8"	4	9"	3'- 2"	6'- 0"	8'- 10"	5	8"	10'- 6"	4	11"	10'- 6"
9	10	17½"	17½"	9"	8"	18	18'- 0"	18	18'- 0"	8	8'- 0"	6	9"	18'- 9"	5	9"	19'- 9"	4	9"	4'- 4"	8'- 4"	4	9"	3'- 2"	7'- 0"	9'- 10"	6	7½"	12'- 6"	4	11"	12'- 6"
9	12	17½"	17½"	11"	8"	18	18'- 0"	18	18'- 0"	10	10'- 0"	6	9"	18'- 7"	5	9"	20'- 2"	3	9"	4'- 9"	9'- 3"	6	9"	3'- 5"	8'- 4"	11'- 4"	5	5½"	14'- 6"	4	11"	14'- 6"
10	4	19"	19"	8"	8"	20	20'- 0"	20	20'- 0"	2	2'- 0"	6	8"	20'- 7"	4	8"	21'- 8"	--	---	-----	-----	4	8"	2'- 9"	4'- 1"	6'- 7"	4	12"	6'- 9"	4	10"	6'- 9"
10	6	18¾"	18¾"	8"	8"	20	20'- 0"	20	20'- 0"	4	4'- 0"	6	9"	20'- 7'	5	9"	21'- 8"	--	---	-----	-----	4	9"	3'- 2"	5'- 1"	8'- 0"	4	12"	8'- 9"	4	10"	8'- 9"
10	8	18¾"	18¾"	8"	8"	20	20'- 0"	20	20'- 0"	6	6'- 0"	6	9"	20'- 7"	5	9"	21'- 8"	3	9"	4'- 0"	7'-10"	4	9"	3'- 2"	6'- 1"	9'- 0"	5	8½"	10'- 9"	4	10"	10'- 9"
10	10	19"	19"	9"	8"	20	20'- 0"	20	20'- 0"	8	8'- 0"	6	9"	20'- 6"	5	9"	21'- 9"	3	9"	4'- 6"	8'- 8"	5	9"	3'- 4"	7'- 3"	10'- 3"	6	7½"	12'- 9"	4	10"	12'- 9"
10	12	19¼"	19¼"	11"	8"	20	20'- 0"	20	20'- 0"	10	10'- 0"	6	9"	20'- 7"	5	9"	22'- 2"	3	9"	4'- 11"	9'- 6"	6	9"	3'- 5"	8'- 6"	11'- 6"	7	10½"	14'-10"	4	10"	14'-10"
12	6	22¼"	22¼"	8"	8"	24	24'- 0"	24	24'- 0"	4	4'- 0"	7	9"	24' -7"	6	9"	25'- 8"	--	---	-----	-----	4	9"	3'-10"	5'- 5"	8'- 11"	4	12"	9'- 4"	4	10"	9'- 4"
12	8	22¼"	22¼"	8"	8"	24	24'- 0"	24	24'- 0"	6	6'- 0"	7	9"	24'- 7"	6	9"	25'- 8"	3	9"	4'- 4"	8'- 5"	4	9"	3'-10"	6'- 5"	9' -11"	5	8"	11'- 4"	4	10"	11'- 4"
12	10	22¼"	22¼"	8½"	8"	24	24'- 0"	24	24'- 0"	8	8'- 0"	7	9"	24'- 5"	6	9"	25'- 9"	3	9"	4'- 9"	9'- 3"	5	9"	4'- 0"	7'- 7"	11'- 2"	6	7½"	13'- 4"	4	10"	13'- 4"
12	12	22½"	22½"	11"	8"	24	24'- 0"	24	24'- 0"	10	10'- 0"	7	9"	24'- 7"	6	9"	26'- 2"	3	9"	5'- 2"	10'- 1"	6	9"	4'- 1"	8'- 9"	12'- 5"	6	7½"	15'- 5"	4	10"	15'- 5"

A COPY OF THE ORIGINAL SEALED AND SIGNED DRAWING IS ON FILE IN THE CENTRAL OFFICE.

VDOT
ROAD AND BRIDGE STANDARDS

SHEET 1 OF 2 | REVISION DATE
1003.13 | 07/11

DOUBLE BOX CULVERTS

20 TO 30 FT. FILLS

VIRGINIA DEPARTMENT OF TRANSPORTATION

SPECIFICATION REFERENCE

BCD-30

FOR TYPICAL SECTION, NOTES AND OTHER DETAILS, REFER TO STANDARD BCD-DT.

		REINFORCING STEEL													QUAN./LF		HEADWALLS								
SPAN	HGHT	BT1															G	HW1							
(FT.)	(FT.)	SIZE	SPACING c-c	a	b	c	d	e	f	g	LENGTH	NO. BL1 #4 BARS	NO. BL2 #3 BARS	REINFORCING STEEL (LBS/LONG. JT)	CONCRETE CLASS A4 (CY/LF)	REINFORCING STEEL (LBS/LF)	HEADWALL LENGTH	SIZE	LENGTH	NO. HW2 BARS	NO. HW3 BARS	INLET CONCRETE CL. A4 (CY)	INLET REINFORCING STEEL (LBS)	OUTLET CONCRETE CL. A4 (CY)	OUTLET REINFORCING STEEL (LBS)	WINGWALL
3	3	4	12"	2'- 7"	0'- 4"	1'- 10"	0'- 5 1/8"	0'- 3 1/4"	7'- 8"	-----	7'-10"	32	12	30.950	0.695	78.691	9'- 6"	6	9'- 2"	1	4	1.433	67.988	1.425	55.073	A
3	4	4	12"	2'- 7"	0'- 4"	1'- 10"	0'- 5 1/8"	0'- 3 1/4"	7'- 8"	-----	7'-10"	32	18	33.065	0.768	84.955	9'- 6"	6	9'- 2"	1	5	1.531	71.439	1.517	55.073	C
4	3	4	12"	3'- 4"	0'- 4 1/2"	2'- 3"	0'- 5 7/8"	0'- 3 3/4"	9'- 8"	-----	9'-11"	40	12	37.636	0.823	92.431	11'- 6"	6	11'- 2"	1	4	1.629	80.004	1.628	67.089	A
4	4	4	12"	3'- 4"	0'- 4 1/2"	2'- 3"	0'- 5 7/8"	0'- 3 3/4"	9'- 8"	-----	9'-11"	40	18	39.745	0.897	98.695	11'- 6"	6	11'- 2"	1	5	1.728	83.455	1.721	67.089	C
4	5	4	12"	3'- 4"	0'- 4 3/4"	2'- 3"	0'- 6 1/4"	0'- 4"	9'- 8"	-----	9'-11"	40	24	41.860	0.986	105.149	11'- 6"	6	11'- 2"	1	6	1.824	86.907	1.811	67.089	E
4	6	4	12"	3'- 4"	0'- 4 3/4"	2'- 3"	0'- 6 1/4"	0'- 4"	9'- 8"	-----	9'-11"	40	30	43.975	1.059	116.756	11'- 6"	6	11'- 2"	1	7	1.923	90.358	1.903	67.089	G
5	3	4	12"	4'- 0"	0'- 6 1/4"	2'- 8"	0'- 8 3/8"	0'- 5 1/2"	11'- 8"	-----	12'- 0"	48	12	44.316	1.058	87.080	13'- 6"	6	13'- 2"	1	4	1.816	92.020	1.822	79.105	B
5	4	4	12"	4'- 0"	0'- 6 1/4"	2'- 8"	0'- 8 3/8"	0'- 5 1/2"	11'- 8"	-----	12'- 0"	48	18	46.425	1.132	93.344	13'- 6"	6	13'- 2"	1	5	1.915	95.471	1.915	79.105	D
5	5	4	12"	4'- 0"	0'- 6 1/4"	2'- 8"	0'- 8 3/8"	0'- 5 1/2"	11'- 8"	-----	12'- 0"	48	24	48.540	1.205	99.608	13'- 6"	6	13'- 2"	1	6	2.014	98.923	2.007	79.105	F
5	6	4	12"	4'- 0"	0'- 6 1/4"	2'- 8"	0'- 8 3/8"	0'- 5 1/2"	11'- 8"	-----	12'- 0"	48	30	50.655	1.278	119.790	13'- 6"	6	13'- 2"	1	7	2.113	102.374	2.100	79.105	H
5	7	4	12"	4'- 0"	0'- 6 1/4"	2'- 8"	0'- 8 3/8"	0'- 5 1/2"	11'- 8"	-----	12'- 0"	48	36	52.770	1.351	134.208	13'- 6"	6	13'- 2"	1	8	2.212	105.825	2.193	79.105	J
6	4	4	11"	4'- 8"	0'- 8 1/4"	3'- 0"	0'-11 1/8"	0'- 7 1/2"	13'- 8"	-----	14'- 2"	56	18	53.105	1.428	134.521	15'- 6"	6	15'- 2"	1	5	2.056	107.487	2.062	91.121	D
6	5	4	11"	4'- 8"	0'- 8 1/4"	3'- 0"	0'-11 1/8"	0'- 7 1/2"	13'- 8"	-----	14'- 2"	56	24	55.220	1.502	140.907	15'- 6"	6	15'- 2"	1	6	2.155	110.939	2.155	91.121	F
6	6	4	11"	4'- 8"	0'- 8"	3'- 0"	0'-10 7/8"	0'- 7 1/4"	13'- 8"	-----	14'- 1"	56	30	57.335	1.553	156.722	15'- 6"	6	15'- 2"	1	7	2.260	114.390	2.254	91.121	H
6	7	4	10"	4'- 8"	0'- 8"	3'- 0"	0'-10 7/8"	0'- 7 1/4"	13'- 8"	-----	14'- 1"	56	36	59.468	1.625	179.230	15'- 6"	6	15'- 2"	1	8	2.359	117.841	2.347	91.121	J
6	8	4	10"	4'- 8"	0'- 8"	3'- 0"	0'-10 7/8"	0'- 7 1/4"	13'- 8"	-----	14'- 1"	56	42	61.586	1.698	199.576	15'- 6"	6	15'- 2"	1	9	2.458	121.293	2.439	91.121	L
7	4	4	9"	5'- 4"	0'- 9 3/4"	3'- 5"	1'- 1 1/4"	0'- 9"	15'- 8"	-----	16'- 3"	64	18	59.785	1.724	184.605	17'- 6"	6	17'- 2"	1	5	2.188	119.503	2.200	103.137	D
7	6	4	9"	5'- 4"	0'- 9 3/4"	3'- 5"	1'- 1 1/4"	0'- 9"	15'- 8"	-----	16'- 3"	64	30	64.015	1.871	198.024	17'- 6"	6	17'- 2"	1	7	2.386	126.406	2.386	103.137	H
7	8	4	9"	5'- 4"	0'- 9 3/4"	3'- 5"	1'- 1 1/4"	0'- 9"	15'- 8"	-----	16'- 3"	64	42	68.245	2.016	241.421	17'- 6"	6	17'- 2"	1	9	2.584	133.309	2.571	103.137	L
7	10	4	9"	5'- 5"	0'- 9 3/4"	3'- 5"	1'- 1 1/4"	0'- 9"	15'-11"	-----	16'- 6"	64	54	72.475	2.273	304.636	17'- 6"	6	17'- 2"	1	11	2.781	140.211	2.757	103.137	P
8	4	4	8"	6'- 0"	0'-11 1/2"	3'-10"	1'- 3 3/4"	0'-10 3/4"	17'- 8"	-----	18'- 4"	72	18	66.465	2.085	220.724	19'- 6"	6	19'- 2"	1	5	2.310	131.519	2.329	115.153	E
8	6	4	8"	6'- 0"	0'-11 1/2"	3'-10"	1'- 3 3/4"	0'-10 3/4"	17'- 8"	-----	18'- 4"	72	30	70.695	2.232	234.588	19'- 6"	6	19'- 2"	1	7	2.508	138.422	2.515	115.153	I
8	8	4	8"	6'- 0"	0'-11 1/2"	3'-10"	1'- 3 3/4"	0'-10 3/4"	17'- 8"	-----	18'- 4"	72	42	74.925	2.377	281.303	19'- 6"	6	19'- 2"	1	9	2.706	145.325	2.700	115.153	M
8	10	4	8"	6'- 1"	0'-11 1/2"	3'-10"	1'- 3 3/4"	0'-10 3/4"	17'- 9"	-----	18'- 6"	72	54	79.155	2.598	348.038	19'- 6"	6	19'- 2"	1	11	2.904	152.227	2.886	115.153	Q
9	4	5	9"	6'- 8"	1'- 1 1/4"	4'- 3"	1'- 6 1/8"	1'- 3/8"	19'- 8"	-----	20'- 6"	80	18	73.145	2.487	288.872	21'- 6"	6	21'- 2"	1	5	2.393	143.535	2.418	127.169	E
9	6	5	9"	6'- 8"	1'- 1 1/4"	4'- 3"	1'- 6 1/8"	1'- 3/8"	19'- 8"	-----	20'- 6"	80	30	77.375	2.635	302.533	21'- 6"	6	21'- 2"	1	7	2.590	150.438	2.604	127.169	I
9	8	5	9"	6'- 7"	1'- 1 1/2"	4'- 3"	1'- 6 1/2"	1'- 5/8"	19'- 8"	-----	20'- 6"	80	42	81.605	2.810	350.619	21'- 6"	6	21'- 2"	1	9	2.778	157.341	2.779	127.169	M
9	10	5	9"	6'- 8"	1'- 1 1/2"	4'- 3"	1'- 6 1/2"	1'- 5/8"	19'- 9"	-----	20'- 8"	80	54	85.835	3.034	404.994	21'- 6"	6	21'- 2"	1	11	2.976	164.243	2.964	127.169	Q
9	12	5	9"	6'- 10"	1'- 1 1/2"	4'- 3"	1'- 6 1/2"	1'- 5/8"	20'- 2"	-----	21- 0"	80	66	90.065	3.374	463.575	21'- 6"	6	21'- 2"	1	13	3.128	171.146	3.104	127.169	U
10	4	5	8"	7'- 3"	1'- 3"	4'- 8"	1'- 8 5/8"	1'- 2 1/8"	21'- 8"	-----	22'- 7"	88	18	79.825	2.938	289.339	23'- 6"	6	23'- 2"	1	5	2.477	155.551	2.510	139.185	E
10	6	6	9"	7'- 4"	1'- 2 3/4"	4'- 8"	1'- 8 1/8"	1'- 1 3/4"	21'- 8"	-----	22'- 7"	88	30	84.055	3.047	357.346	23'- 6"	6	23'- 2"	1	7	2.663	162.454	2.683	139.185	I
10	8	6	9"	7'- 4"	1'- 2 3/4"	4'- 8"	1'- 8 1/8"	1'- 1 3/4"	21'- 8"	-----	22'- 7"	88	42	88.285	3.192	404.290	23'- 6"	6	23'- 2"	1	9	2.861	169.357	2.869	139.185	M
10	10	6	9"	7'- 5"	1'- 3"	4'- 8"	1'- 8 1/2"	1'- 2"	21'- 9"	-----	22'- 9"	88	54	92.515	3.450	469.281	23'- 6"	6	23'- 2"	1	11	3.047	176.259	3.042	139.185	Q
10	12	6	9"	7'- 6"	1'- 3 1/4"	4'- 8"	1'- 8 7/8"	1'- 2 1/4"	22'- 2"	-----	23'- 1"	88	66	96.745	3.828	524.134	23'- 6"	6	23'- 2"	1	13	3.186	183.162	3.168	139.185	U
12	6	7	9"	8'- 8"	1'- 6 1/4"	5'- 5"	2'- 1"	1'- 5"	25'- 8"	-----	26'- 9"	104	30	97.415	4.059	522.958	27'- 6"	6	27'- 2"	1	7	2.741	186.486	2.775	163.217	J
12	8	7	9"	8'- 8"	1'- 6 1/4"	5'- 5"	2'- 1"	1'- 5"	25'- 8"	-----	26'- 9"	104	42	101.645	4.204	574.103	27'- 6"	6	27'- 2"	1	9	2.939	193.389	2.960	163.217	N
12	10	7	9"	8'- 8"	1'- 6 1/4"	5'- 5"	2'- 1"	1'- 5"	25'- 9"	-----	26'-10"	104	54	105.875	4.389	638.521	27'- 6"	6	27'- 2"	1	11	3.137	200.291	3.145	163.217	R
12	12	7	9"	8'- 11"	1'- 6 1/2"	5'- 5"	2'- 1/4"	1'- 5 1/4"	26'- 2"	-----	27'- 4"	104	66	110.105	4.822	699.915	27'- 6"	6	27'- 2"	1	13	3.271	207.194	3.267	163.217	V

A COPY OF THE ORIGINAL SEALED AND SIGNED DRAWING IS ON FILE IN THE CENTRAL OFFICE.

SPECIFICATION REFERENCE

DOUBLE BOX CULVERTS

20 TO 30 FT. FILLS

VIRGINIA DEPARTMENT OF TRANSPORTATION

VDOT

ROAD AND BRIDGE STANDARDS

REVISION DATE 07/11

SHEET 2 OF 2

1003.14

BCD-40

FOR TYPICAL SECTION, NOTES AND OTHER DETAILS, REFER TO STANDARD BCD-DT.

DIMENSIONS						REINFORCING STEEL																										
SPAN	HGHT	T1	T2	T3	T4							BH1			BH2			BH3				BH4					BV1			BV2		
(FT.)	(FT.)	TOP SLAB	BOTTOM SLAB	EXTERIOR WALL (IN.)	INTERIOR WALL (IN.)	A	B	C	D	E	F	SIZE	SPACING C-C	LENGTH	SIZE	SPACING C-C	LENGTH	SIZE	SPACING C-C	a	LENGTH	SIZE	SPACING C-C	a	b	LENGTH	SIZE	SPACING C-C	LENGTH	SIZE	SPACING C-C	LENGTH
3	3	8"	8"	8"	8"	6	6'- 0"	6	6'- 0"	1	1'- 0"	4	12"	6'- 7"	4	12"	7'- 8"	4	12"	2'- 2"	4'- 0"	4	12"	2'- 4"	2'- 9"	4'- 9"	4	12"	4'- 0"	4	12"	4'- 0"
3	4	8"	8"	8"	8"	6	6'- 0"	6	6'- 0"	2	2'- 0"	4	12"	6'- 7"	4	12"	7'- 8"	3	12"	2'- 4"	4'- 5"	4	12"	2'- 4"	3'- 3"	5'- 3"	4	12"	5'- 0"	4	12"	5'- 0"
4	3	10"	10"	8"	8"	8	8'- 0"	8	8'- 0"	1	1'- 0"	4	12"	8'- 7"	4	12"	9'- 8"	--	---	-----	-----	4	12"	2'- 4"	2'-10"	4'- 11"	4	12"	4'- 3"	4	12"	4'- 3"
4	4	10"	10"	8"	8"	8	8'- 0"	8	8'- 0"	2	2'- 0"	4	12"	8'- 7"	4	12"	9'- 8"	--	---	-----	-----	4	12"	2'- 4"	3'- 4"	5'- 5"	4	12"	5'- 3"	4	12"	5'- 3"
4	5	10"	10"	8"	8"	8	8'- 0"	8	8'- 0"	3	3'- 0"	4	12"	8'- 7"	4	12"	9'- 8"	--	---	-----	-----	4	12"	2'- 4"	3'-10"	5'- 11"	4	12"	6'- 3"	4	12"	6'- 3"
4	6	10"	10"	8"	8"	8	8'- 0"	8	8'- 0"	4	4'- 0"	4	12"	8'- 7"	4	12"	9'- 8"	3	12"	2'-11"	5'- 7"	4	12"	2'- 4"	4'- 4"	6'- 5"	5	12"	7'- 3"	4	12"	7'- 3"
5	3	12½"	12½"	8"	8"	10	10'- 0"	10	10'- 0"	1	1'- 0"	4	11"	10'- 7"	4	11"	11'- 8"	--	---	-----	-----	4	11"	2'- 4"	3'- 1"	5'- 1"	4	12"	4'- 9"	4	12"	4'- 9"
5	4	12½"	12½"	8"	8"	10	10'- 0"	10	10'- 0"	2	2'- 0"	4	11"	10'- 7"	4	11"	11'- 8"	--	---	-----	-----	4	11"	2'- 4"	3'- 7"	5'- 7"	4	12"	5'- 9"	4	12"	5'- 9"
5	5	12½"	12½"	8"	8"	10	10'- 0"	10	10'- 0"	3	3'- 0"	4	11"	10'- 7"	4	11"	11'- 8"	--	---	-----	-----	4	11"	2'- 4"	4'- 1"	6'- 1"	4	12"	6'- 9"	4	12"	6'- 9"
5	6	12¼"	12¼"	8"	8"	10	10'- 0"	10	10'- 0"	4	4'- 0"	4	11"	10'- 7"	4	11"	11'- 8"	3	11"	3'- 1"	5'-11"	4	11"	2'- 4"	4'- 7"	6'- 7"	5	12"	7'- 8"	4	12"	7'- 8"
5	7	12¼"	12¼"	8"	8"	10	10'- 0"	10	10'- 0"	5	5'- 0"	4	11"	10'- 7"	4	11"	11'- 8"	4	11"	3'- 4"	6'- 3"	4	11"	2'- 4"	5'- 1"	7'- 1"	5	8"	8'- 8"	4	12"	8'- 8"
6	4	14½"	14½"	8"	8"	12	12'- 0"	12	12'- 0"	2	2'- 0"	4	9"	12'- 7"	4	9"	13'- 8"	--	---	-----	-----	4	9"	2'- 4"	3'- 9"	5'- 9"	4	12"	6'- 0"	4	12"	6'- 0"
6	5	14½"	14½"	8"	8"	12	12'- 0"	12	12'- 0"	3	3'- 0"	4	9"	12'- 7"	4	9"	13'- 8"	--	---	-----	-----	4	9"	2'- 4"	4'- 3"	6'- 3"	4	12"	7'- 0"	4	12"	7'- 0"
6	6	14¼"	14¼"	8"	8"	12	12'- 0"	12	12'- 0"	4	4'- 0"	4	9"	12'- 7"	4	9"	13'- 8"	--	---	-----	-----	4	9"	2'- 4"	4'- 9"	6'- 9"	5	12"	8'- 0"	4	12"	8'- 0"
6	7	14¼"	14¼"	8"	8"	12	12'- 0"	12	12'- 0"	5	5'- 0"	4	9"	12'- 7"	4	9"	13'- 8"	3	9"	3'- 6"	6'- 8"	4	9"	2'- 4"	5'- 3"	7'- 3"	5	8"	9'- 0"	4	12"	9'- 0"
6	8	14¼"	14¼"	8½"	8"	12	12'- 0"	12	12'- 0"	6	6'- 0"	4	9"	12'- 5"	4	9"	13'- 9"	--	---	-----	-----	5	9"	2'- 6"	5'- 11"	8'- 0"	5	6"	10'- 0"	4	12"	10'- 0"
7	4	16½"	16½"	8"	8"	14	14'- 0"	14	14'- 0"	2	2'- 0"	5	8"	14'- 7"	4	8"	15'- 8"	--	---	-----	-----	4	8"	2'- 9"	3'- 11"	6'- 4"	4	12"	6'- 5"	4	11"	6'- 5"
7	6	16¼"	16¼"	8"	8"	14	14'- 0"	14	14'- 0"	4	4'- 0"	5	9"	14'- 7"	4	9"	15'- 8"	--	---	-----	-----	4	9"	2'- 9"	4'- 11"	7'- 4"	5	12"	8'- 4"	4	11"	8'- 4"
7	8	16¼"	16¼"	8"	8"	14	14'- 0"	14	14'- 0"	6	6'- 0"	5	9"	14'- 7"	5	9"	15'- 8"	3	9"	3'-10"	7'- 5"	4	9"	2'- 9"	5'- 11"	8'- 4"	5	6"	10'- 4"	4	11"	10'- 4"
7	10	16¼"	16¼"	10½"	8"	14	14'- 0"	14	14'- 0"	8	8'- 0"	5	9"	14'- 9"	5	9"	16'- 0"	3	9"	4'- 3"	8'- 3"	5	9"	2'- 11"	7'- 1"	9'- 7"	6	9"	12'- 4"	4	11"	12'- 4"
8	4	18½"	18½"	8"	8"	16	16'- 0"	16	16'- 0"	2	2'- 0"	6	9"	16'- 7"	5	9"	17'- 8"	--	---	-----	-----	4	9"	3'- 2"	4'- 1"	6'- 11"	4	12"	6'- 9"	4	10"	6'- 9"
8	6	18½"	18½"	8"	8"	16	16'- 0"	16	16'- 0"	4	4'- 0"	6	9"	16'- 7"	5	9"	17'- 8"	--	---	-----	-----	4	9"	3'- 2"	5'- 1"	7'- 11"	5	12"	8'- 9"	4	10"	8'- 9"
8	8	18¾"	18¾"	8½"	8"	16	16'- 0"	16	16'- 0"	6	6'- 0"	6	9"	16'- 5"	5	9"	17'- 9"	--	---	-----	-----	5	9"	3'- 4"	6'- 3"	9'- 2"	5	6"	10'- 9"	4	10"	10'- 9"
8	10	18½"	18½"	10½"	8"	16	16'- 0"	16	16'- 0"	8	8'- 0"	6	9"	16'- 6"	5	9"	18'- 0"	--	---	-----	-----	6	9"	3'- 5"	7'- 5"	10'- 5"	4	4"	12'- 9"	4	10"	12'- 9"
9	4	20½"	20½"	8"	8"	18	18'- 0"	18	18'- 0"	2	2'- 0"	6	9"	18'- 7"	5	9"	19'- 8"	--	---	-----	-----	4	9"	3'- 2"	4'- 3"	7'- 1"	4	12"	7'- 0"	4	10"	7'- 0"
9	6	20½"	20½"	8"	8"	18	18'- 0"	18	18'- 0"	4	4'- 0"	6	9"	18'- 7"	5	9"	19'- 8"	--	---	-----	-----	4	9"	3'- 2"	5'- 3"	8'- 1"	5	12"	9'- 0"	4	10"	9'- 0"
9	8	20¼"	20¼"	8"	8"	18	18'- 0"	18	18'- 0"	6	6'- 0"	6	9"	18'- 7"	5	9"	19'- 8"	3	9"	4'- 2"	8'- 1"	4	9"	3'- 2"	6'- 3"	9'- 1"	5	6"	11'- 0"	4	10"	11'- 0"
9	10	20"	20"	11"	8"	18	18'- 0"	18	18'- 0"	8	8'- 0"	6	9"	18'-10"	5	9"	20'- 2"	3	9"	4'- 6"	8'-10"	5	9"	3'- 4"	7'- 4"	10'- 4"	4	4"	13'- 0"	4	10"	13'- 0"
9	12	20½"	20½"	13"	8"	18	18'- 0"	18	18'- 0"	10	10'- 0"	6	9"	18'-11"	5	9"	20'- 6"	3	9"	5'- 0"	9'- 9"	6	9"	3'- 5"	8'- 7"	11'- 7"	6	7½"	15'- 0"	4	10"	15'- 0"
10	4	22¾"	22¾"	8"	8"	20	20'- 0"	20	20'- 0"	2	2'- 0"	6	8"	20'- 7"	5	8"	21'- 8"	--	---	-----	-----	4	8"	3'- 2"	4'- 5"	7'- 4"	4	12"	7'- 5"	4	10"	7'- 5"
10	6	22¾"	22¾"	8"	8"	20	20'- 0"	20	20'- 0"	4	4'- 0"	6	8"	20'- 7"	5	8"	21'- 8"	--	---	-----	-----	4	8"	3'- 2"	5'- 5"	8'- 4"	5	11½"	9'- 5"	4	10"	9'- 5"
10	8	22½"	22½"	8"	8"	20	20'- 0"	20	20'- 0"	6	6'- 0"	6	8"	20'- 7"	5	8"	21'- 8"	3	8"	4'- 4"	8'- 6"	4	8"	3'- 2"	6'- 5"	9'- 3"	6	9"	11'- 5"	4	10"	11'- 5"
10	10	22¼"	22¼"	10"	8"	20	20'- 0"	20	20'- 0"	8	8'- 0"	6	8"	20'- 8"	5	8"	22'- 0"	3	8"	4'- 9"	9'- 3"	5	8"	3'- 4"	7'- 7"	10'- 6"	5	6"	13'- 4"	4	10"	13'- 4"
10	12	22¼"	22¼"	12½"	8"	20	20'- 0"	20	20'- 0"	10	10'- 0"	7	9"	20'-10"	6	9"	22'- 5"	3	9"	5'- 2"	10'- 0"	6	9"	4'- 1"	8'- 9"	12'- 5"	6	7½"	15'- 4"	4	10"	15'- 4"
12	6	27½"	27½"	8"	8"	24	24'- 0"	24	24'- 0"	4	4'- 0"	7	9"	24'- 7"	6	9"	25'- 8"	--	---	-----	-----	4	9"	3'- 10"	5'- 10"	9'- 4"	5	10"	10'- 3"	4	8½"	10'- 3"
12	8	27"	27"	8"	8"	24	24'- 0"	24	24'- 0"	6	6'- 0"	7	9"	24'- 7"	6	9"	25'- 8"	3	9"	4'- 9"	9'- 3"	4	9"	3'- 10"	6'- 9"	10'- 4"	5	5½"	12'- 2"	4	8½"	12'- 2"
12	10	27"	27"	9½"	8"	24	24'- 0"	24	24'- 0"	8	8'- 0"	7	9"	24'- 7"	6	9"	25'-11"	3	9"	5'- 1"	10'- 0"	5	9"	4'- 0"	8'- 0"	11'- 7"	7	8"	14'- 2"	4	8½"	14'- 2"
12	12	26¾"	26¾"	12"	8"	24	24'- 0"	24	24'- 0"	10	10'- 0"	7	9"	24'- 9"	6	9"	26'- 3"	3	9"	5'- 6"	10'- 9"	6	9"	4'- 1"	9'- 1"	12'- 9"	5	5"	16'- 1"	4	8½"	16'- 1"

A COPY OF THE ORIGINAL SEALED AND SIGNED DRAWING IS ON FILE IN THE CENTRAL OFFICE.

VDOT
ROAD AND BRIDGE STANDARDS

SHEET 1 OF 2 | REVISION DATE
1003.15 | 07/11

DOUBLE BOX CULVERTS

30 TO 40 FT. FILLS

VIRGINIA DEPARTMENT OF TRANSPORTATION

SPECIFICATION REFERENCE

BCD-40

FOR TYPICAL SECTION, NOTES AND OTHER DETAILS, REFER TO STANDARD BCD-DT.

SPAN (FT.)	HGHT (FT.)	REINFORCING STEEL BT1 SIZE	SPACING c-c	a	b	c	d	e	f	g	LENGTH	NO. BL1 #4 BARS	NO. BL2 #3 BARS	REINFORCING STEEL (LBS/LONG. JT)	QUAN./LF CONCRETE CLASS A4 (CY/LF)	REINFORCING STEEL (LBS/LF)	HEADWALLS G HEADWALL LENGTH	HW1 SIZE	HW1 LENGTH	NO. HW2 BARS	NO. HW3 BARS	INLET CONCRETE CL. A4 (CY)	INLET REINFORCING STEEL (LBS)	OUTLET CONCRETE CL. A4 (CY)	OUTLET REINFORCING STEEL (LBS)	WINGWALL
3	3	4	12"	2'- 7"	0'- 4"	1'- 10"	0'- 5 1/8"	0'- 3 1/4"	7'- 8"	-----	7'-10"	32	12	30.950	0.694	89.205	9'- 6"	6	9'- 2"	1	4	1.433	67.988	1.425	55.073	A
3	4	4	12"	2'- 7"	0'- 4"	1'- 10"	0'- 5 1/8"	0'- 3 1/4"	7'- 8"	-----	7'-10"	32	18	33.065	0.768	91.575	9'- 6"	6	9'- 2"	1	5	1.531	71.439	1.517	55.073	C
4	3	4	12"	3'- 3"	0'- 6"	2'- 3"	0'- 8"	0'- 5 1/4"	9'- 8"	-----	10'- 0"	40	12	37.630	0.916	93.570	11'- 6"	6	11'- 2"	1	4	1.631	80.004	1.630	67.089	B
4	4	4	12"	3'- 3"	0'- 6"	2'- 3"	0'- 8"	0'- 5 1/4"	9'- 8"	-----	10'- 0"	40	18	39.754	0.989	99.834	11'- 6"	6	11'- 2"	1	5	1.730	83.455	1.722	67.089	D
4	5	4	12"	3'- 3"	0'- 6"	2'- 3"	0'- 8"	0'- 5 1/4"	9'- 8"	-----	10'- 0"	40	24	41.860	1.063	106.098	11'- 6"	6	11'- 2"	1	6	1.829	86.907	1.815	67.089	F
4	6	4	12"	3'- 3"	0'- 6"	2'- 3"	0'- 8"	0'- 5 1/4"	9'- 8"	-----	10'- 0"	40	30	43.975	1.136	126.186	11'- 6"	6	11'- 2"	1	7	1.928	90.358	1.908	67.089	H
5	3	4	11"	3'- 10"	0'- 8 1/2"	2'- 8"	0'-11 1/2"	0'- 7 3/4"	11'- 8"	-----	12'- 2"	48	12	44.316	1.224	94.204	13'- 6"	6	13'- 2"	1	4	1.786	92.020	1.791	79.105	B
5	4	4	11"	3'- 10"	0'- 8 1/2"	2'- 8"	0'-11 1/2"	0'- 7 3/4"	11'- 8"	-----	12'- 2"	48	18	46.425	1.298	100.590	13'- 6"	6	13'- 2"	1	5	1.885	95.471	1.884	79.105	D
5	5	4	11"	3'- 10"	0'- 8 1/2"	2'- 8"	0'-11 1/2"	0'- 7 3/4"	11'- 8"	-----	12'- 2"	48	24	48.540	1.372	106.975	13'- 6"	6	13'- 2"	1	6	1.984	98.923	1.977	79.105	F
5	6	4	11"	3'- 10"	0'- 8 1/4"	2'- 8"	0'-11 1/8"	0'- 7 1/2"	11'- 8"	-----	12'- 2"	48	30	50.655	1.425	128.640	13'- 6"	6	13'- 2"	1	7	2.078	102.374	2.065	79.105	H
5	7	4	11"	3'- 10"	0'- 8 1/4"	2'- 8"	0'-11 1/8"	0'- 7 1/2"	11'- 8"	-----	12'- 2"	48	36	52.770	1.498	153.361	13'- 6"	6	13'- 2"	1	8	2.177	105.825	2.158	79.105	J
6	4	4	9"	4'- 6"	0'-10 1/2"	3'- 0"	1'- 2 3/8"	0'- 9 3/4"	13'- 8"	-----	14'- 4"	56	18	53.105	1.621	153.154	15'- 6"	6	15'- 2"	1	5	2.009	107.487	2.015	91.121	D
6	5	4	9"	4'- 6"	0'-10 1/2"	3'- 0"	1'- 2 3/8"	0'- 9 3/4"	13'- 8"	-----	14'- 4"	56	24	55.220	1.695	159.864	15'- 6"	6	15'- 2"	1	6	2.102	110.939	2.102	91.121	F
6	6	4	9"	4'- 6"	0'-10 1/4"	3'- 0"	1'- 2"	0'- 9 1/2"	13'- 8"	-----	14'- 3"	56	30	57.335	1.746	172.388	15'- 6"	6	15'- 2"	1	7	2.207	114.390	2.201	91.121	H
6	7	4	9"	4'- 6"	0'-10 1/4"	3'- 0"	1'- 2"	0'- 9 1/2"	13'- 8"	-----	14'- 3"	56	36	59.450	1.818	202.599	15'- 6"	6	15'- 2"	1	8	2.306	117.841	2.293	91.121	J
6	8	4	9"	4'- 6"	0'-10 1/4"	3'- 0"	1'- 2"	0'- 9 1/2"	13'- 9"	-----	14'- 4"	56	42	61.565	1.922	224.956	15'- 6"	6	15'- 2"	1	9	2.405	121.293	2.386	91.121	L
7	4	4	8"	5'- 1"	1'- 0 1/2"	3'- 5"	1'- 5 1/8"	0'-11 3/4"	15'- 8"	-----	16'- 5"	64	18	59.785	1.994	202.803	17'- 6"	6	17'- 2"	1	5	2.132	119.503	2.144	103.137	E
7	6	5	9"	5'- 2"	1'- 0 1/4"	3'- 5"	1'- 4 3/4"	0'-11 3/8"	15'- 8"	-----	16'- 5"	64	30	64.015	2.116	223.899	17'- 6"	6	17'- 2"	1	7	2.330	126.406	2.330	103.137	I
7	8	5	9"	5'- 2"	1'- 0 1/4"	3'- 5"	1'- 4 3/4"	0'-11 3/8"	15'- 8"	-----	16'- 5"	64	42	68.245	2.259	291.161	17'- 6"	6	17'- 2"	1	9	2.528	133.309	2.515	103.137	M
7	10	4	9"	5'- 4"	1'- 0 1/4"	3'- 5"	1'- 4 7/8"	0'-11 1/2"	16'- 0"	-----	16'-10"	64	54	72.475	2.601	315.835	17'- 6"	6	17'- 2"	1	11	2.687	140.211	2.662	103.137	Q
8	4	5	9"	5'- 9"	1'- 2 1/2"	3'- 10"	1'- 7 7/8"	1'- 1 5/8"	17'- 8"	-----	18'- 7"	72	18	66.474	2.415	266.568	19'- 6"	6	19'- 2"	1	5	2.211	131.519	2.230	115.153	E
8	6	5	9"	5'- 9"	1'- 2 1/2"	3'- 10"	1'- 7 7/8"	1'- 1 5/8"	17'- 8"	-----	18'- 7"	72	30	70.695	2.562	287.084	19'- 6"	6	19'- 2"	1	7	2.400	138.422	2.407	115.153	I
8	8	5	9"	5'- 9"	1'- 2 3/4"	3'- 10"	1'- 8 1/4"	1'- 1 7/8"	17'- 9"	-----	18'- 8"	72	42	74.925	2.768	344.193	19'- 6"	6	19'- 2"	1	9	2.589	145.325	2.583	115.153	M
8	10	5	9"	5'- 11"	1'- 2 1/2"	3'- 10"	1'- 7 7/8"	1'- 1 5/8"	18'- 0"	-----	19'- 0"	72	54	79.155	3.052	392.132	19'- 6"	6	19'- 2"	1	11	2.756	152.227	2.737	115.153	Q
9	4	6	9"	6'- 5"	1'- 4 1/2"	4'- 3"	1'-10 5/8"	1'- 3 1/2"	19'- 8"	-----	20'- 8"	80	18	73.154	2.886	318.325	21'- 6"	6	21'- 2"	1	5	2.266	143.535	2.292	127.169	E
9	6	6	9"	6'- 5"	1'- 4 1/2"	4'- 3"	1'-10 5/8"	1'- 3 1/2"	19'- 8"	-----	20'- 8"	80	30	77.375	3.033	339.090	21'- 6"	6	21'- 2"	1	7	2.464	150.438	2.477	127.169	I
9	8	6	9"	6'- 5"	1'- 4 1/4"	4'- 3"	1'-10 1/4"	1'- 3 1/4"	19'- 8"	-----	20'- 8"	80	42	81.605	3.146	393.408	21'- 6"	6	21'- 2"	1	9	2.662	157.341	2.663	127.169	M
9	10	6	9"	6'- 8"	1'- 4"	4'- 3"	1'- 9 7/8"	1'- 3"	20'- 2"	-----	21'- 2"	80	54	85.835	3.507	437.714	21'- 6"	6	21'- 2"	1	11	2.829	164.243	2.818	127.169	Q
9	12	6	9"	6'- 10"	1'- 4 1/2"	4'- 3"	1'-10 5/8"	1'- 3 1/2"	20'- 6"	-----	21'- 6"	80	66	90.065	3.941	505.735	21'- 6"	6	21'- 2"	1	13	2.858	171.146	2.833	127.169	U
10	4	6	8"	7'- 0"	1'- 6 3/4"	4'- 8"	2'- 1 3/4"	1'- 5 3/4"	21'- 8"	-----	22'-10"	88	18	79.825	3.440	380.166	23'- 6"	6	23'- 2"	1	5	2.290	155.551	2.323	139.185	F
10	6	6	8"	7'- 0"	1'- 6 3/4"	4'- 8"	2'- 1 3/4"	1'- 5 3/4"	21'- 8"	-----	22'-10"	88	30	84.055	3.587	402.516	23'- 6"	6	23'- 2"	1	7	2.488	162.454	2.508	139.185	J
10	8	6	8"	7'- 0"	1'- 6 1/2"	4'- 8"	2'- 1 3/8"	1'- 5 1/2"	21'- 8"	-----	22'-10"	88	42	88.285	3.697	458.144	23'- 6"	6	23'- 2"	1	9	2.698	169.357	2.706	139.185	N
10	10	6	8"	7'- 2"	1'- 6 1/4"	4'- 8"	2'- 1 1/8"	1'- 5 1/4"	22'- 0"	-----	23'- 2"	88	54	92.515	3.976	508.710	23'- 6"	6	23'- 2"	1	11	2.866	176.259	2.861	139.185	R
10	12	6	9"	7'- 5"	1'- 6 1/4"	4'- 8"	2'- 1 1/8"	1'- 5 1/4"	22'- 5"	-----	23'- 7"	88	66	96.745	4.385	598.699	23'- 6"	6	23'- 2"	1	13	2.914	183.162	2.895	139.185	V
12	6	7	9"	8'- 3"	1'-11 1/2"	5'- 5"	2'- 8 3/8"	1'-10 1/4"	25'- 8"	-----	27'- 2"	104	30	97.415	4.900	543.924	27'- 6"	6	27'- 2"	1	7	2.468	186.486	2.501	163.217	J
12	8	7	9"	8'- 3"	1'-11"	5'- 5"	2'- 7 5/8"	1'- 9 3/4"	25'- 8"	-----	27'- 1"	104	42	101.645	4.964	603.378	27'- 6"	6	27'- 2"	1	9	2.681	193.389	2.702	163.217	N
12	10	7	9"	8'- 5"	1'-11"	5'- 5"	2'- 7 5/8"	1'- 9 3/4"	25'- 11"	-----	27'- 4"	104	54	105.875	5.241	674.441	27'- 6"	6	27'- 2"	1	11	2.835	200.291	2.843	163.217	R
12	12	7	9"	8'- 7"	1'-10 3/4"	5'- 5"	2'- 7 1/4"	1'- 9 1/2"	26'- 3"	-----	27'- 9"	104	66	110.138	5.617	720.581	27'- 6"	6	27'- 2"	1	13	2.860	207.194	2.855	163.217	V

A COPY OF THE ORIGINAL SEALED AND SIGNED DRAWING IS ON FILE IN THE CENTRAL OFFICE.

SPECIFICATION REFERENCE

DOUBLE BOX CULVERTS

30 TO 40 FT. FILLS

VIRGINIA DEPARTMENT OF TRANSPORTATION

VDOT

ROAD AND BRIDGE STANDARDS

REVISION DATE 07/11

SHEET 2 OF 2

1003.16

BCD-50

FOR TYPICAL SECTION, NOTES AND OTHER DETAILS, REFER TO STANDARD BCD-DT.

DIMENSIONS						REINFORCING STEEL																										
SPAN	HGHT	T1	T2	T3	T4							BH1			BH2			BH3				BH4					BV1			BV2		
(FT.)	(FT.)	TOP SLAB	BOTTOM SLAB	EXTERIOR WALL (IN.)	INTERIOR WALL (IN.)	A	B	C	D	E	F	SIZE	SPACING C-C	LENGTH	SIZE	SPACING C-C	LENGTH	SIZE	SPACING C-C	a	LENGTH	SIZE	SPACING C-C	a	b	LENGTH	SIZE	SPACING C-C	LENGTH	SIZE	SPACING C-C	LENGTH
3	3	9¼"	9¼"	8"	8"	6	6'- 0"	6	6'- 0"	1	1'- 0"	4	12"	6'- 7"	4	12"	7'- 8"	--	---	-----	-----	4	12"	2'- 4"	2'- 10"	4'- 10"	4	12"	4'- 2"	4	12"	4'- 2"
3	4	9¼"	9¼"	8"	8"	6	6'- 0"	6	6'- 0"	2	2'- 0"	4	12"	6'- 7"	4	12"	7'- 8"	--	---	-----	-----	4	12"	2'- 4"	3'- 4"	5'- 4"	4	12"	5'- 2"	4	12"	5'- 2"
4	3	11½"	11½"	8"	8"	8	8'- 0"	8	8'- 0"	1	1'- 0"	4	12"	8'- 7"	4	12"	9'- 8"	--	---	-----	-----	4	12"	2'- 4"	3'- 0"	5'- 0"	4	12"	4'- 6"	4	12"	4'- 6"
4	4	11½"	11½"	8"	8"	8	8'- 0"	8	8'- 0"	2	2'- 0"	4	12"	8'- 7"	4	12"	9'- 8"	--	---	-----	-----	4	12"	2'- 4"	3'- 6"	5'- 6"	4	12"	5'- 6"	4	12"	5'- 6"
4	5	11¼"	11¼"	8"	8"	8	8'- 0"	8	8'- 0"	3	3'- 0"	4	12"	8'- 7"	4	12"	9'- 8"	--	---	-----	-----	4	12"	2'- 4"	4'- 0"	6'- 0"	5	12"	6'- 6"	4	12"	6'- 6"
4	6	11¼"	11¼"	8"	8"	8	8'- 0"	8	8'- 0"	4	4'- 0"	4	12"	8'- 7"	4	12"	9'- 8"	4	12"	3'- 0"	5'- 9"	4	12"	2'- 4"	4'- 6"	6'- 6"	5	9"	7'- 6"	4	12"	7'- 6"
5	3	14½"	14½"	8"	8"	10	10'- 0"	10	10'- 0"	1	1'- 0"	4	10"	10'- 7"	4	10"	11'- 8"	--	---	-----	-----	4	10"	2'- 4"	3'- 3"	5'- 3"	4	12"	5'- 0"	4	12"	5'- 0"
5	4	14"	14"	8"	8"	10	10'- 0"	10	10'- 0"	2	2'- 0"	4	10"	10'- 7"	4	10"	11'- 8"	--	---	-----	-----	4	10"	2'- 4"	3'- 9"	5'- 9"	4	12"	6'- 0"	4	12"	6'- 0"
5	5	14"	14"	8"	8"	10	10'- 0"	10	10'- 0"	3	3'- 0"	4	10"	10'- 7"	4	10"	11'- 8"	--	---	-----	-----	4	10"	2'- 4"	4'- 3"	6'- 3"	5	12"	7'- 0"	4	12"	7'- 0"
5	6	13¾"	13¾"	8"	8"	10	10'- 0"	10	10'- 0"	4	4'- 0"	4	10"	10'- 7"	4	10"	11'- 8"	--	---	-----	-----	4	10"	2'- 4"	4'- 8"	6'- 9"	5	9"	7'- 11"	4	12"	7'- 11"
5	7	14"	14"	8½"	8"	10	10'- 0"	10	10'- 0"	5	5'- 0"	4	10"	10'- 5"	4	10"	11'- 9"	--	---	-----	-----	5	10"	2'- 6"	5'- 4"	7'- 6"	6	10½"	9'- 0"	4	12"	9'- 0"
6	4	16½"	16½"	8"	8"	12	12'- 0"	12	12'- 0"	2	2'- 0"	5	9"	12'- 7"	4	9"	13'- 8"	--	---	-----	-----	4	9"	2'- 9"	3'- 11"	6'- 4"	4	12"	6'- 5"	4	10"	6'- 5"
6	5	16½"	16½"	8"	8"	12	12'- 0"	12	12'- 0"	3	3'- 0"	5	9"	12'- 7"	4	9"	13'- 8"	--	---	-----	-----	4	9"	2'- 9"	4'- 5"	6'- 10"	5	12"	7'- 5"	4	10"	7'- 5"
6	6	16½"	16½"	8"	8"	12	12'- 0"	12	12'- 0"	4	4'- 0"	5	9"	12'- 7"	4	9"	13'- 8"	--	---	-----	-----	4	9"	2'- 9"	4'- 11"	7'- 4"	5	9"	8'- 5"	4	10½"	8'- 5"
6	7	16½"	16½"	8"	8"	12	12'- 0"	12	12'- 0"	5	5'- 0"	5	9"	12'- 7"	4	9"	13'- 8"	3	9"	3'- 8"	7'- 1"	4	9"	2'- 9"	5'- 5"	7'- 10"	5	6½"	9'- 5"	4	10"	9'- 5"
6	8	16½"	16½"	9½"	8"	12	12'- 0"	12	12'- 0"	6	6'- 0"	5	9"	12'- 7"	4	9"	13'- 11"	--	---	-----	-----	5	9"	2'- 11"	6'- 1"	8'- 7"	7	11½"	10'- 5"	4	10½"	10'- 5"
7	4	19"	19"	8"	8"	14	14'- 0"	14	14'- 0"	2	2'- 0"	6	9"	14'- 7"	5	9"	15'- 8"	--	---	-----	-----	4	9"	3'- 2"	4'- 1"	7'- 0"	4	12"	6'- 9"	4	10"	6'- 9"
7	6	18¾"	18¾"	8"	8"	14	14'- 0"	14	14'- 0"	4	4'- 0"	5	8"	14'- 7"	5	8"	15'- 8"	--	---	-----	-----	4	8"	2'- 9"	5'- 1"	7'- 7"	5	9"	8'- 9"	4	10"	8'- 9"
7	8	18¾"	18¾"	9"	8"	14	14'- 0"	14	14'- 0"	6	6'- 0"	5	8"	14'- 9"	5	8"	15'- 9"	3	8"	4'- 0"	7'- 10"	4	8"	2'- 9"	6'- 1"	8'- 7"	6	7½"	10'- 9"	4	10"	10'- 9"
7	10	19"	19"	12"	8"	14	14'- 0"	14	14'- 0"	8	8'- 0"	5	8"	15'- 0"	5	8"	16'- 3"	3	8"	4'- 6"	8'- 8"	5	8"	2'- 11"	7'- 3"	9'- 10"	7	9"	12'- 9"	4	10"	12'- 9"
8	4	21½"	21½"	8"	8"	16	16'- 0"	16	16'- 0"	2	2'- 0"	6	9"	16'- 7"	5	9"	17'- 8"	--	---	-----	-----	4	9"	3'- 2"	4'- 4"	7'- 2"	4	12"	7'- 3"	4	10"	7'- 3"
8	6	21"	21"	8"	8"	16	16'- 0"	16	16'- 0"	4	4'- 0"	6	9"	16'- 7"	5	9"	17'- 8"	--	---	-----	-----	4	9"	3'- 2"	5'- 3"	8'- 2"	5	8½"	9'- 2"	4	10"	9'- 2"
8	8	21½"	21½"	9"	8"	16	16'- 0"	16	16'- 0"	6	6'- 0"	6	9"	16'- 6"	5	9"	17'- 9"	--	---	-----	-----	5	9"	3'- 4"	6'- 6"	9'- 5"	6	7½"	11'- 3"	4	10"	11'- 3"
8	10	21½"	21½"	12"	8"	16	16'- 0"	16	16'- 0"	8	8'- 0"	6	9"	16'- 9"	5	9"	18'- 3"	--	---	-----	-----	6	9"	3'- 5"	7'- 8"	10'- 8"	4	4"	13'- 3"	4	10"	13'- 3"
9	4	24"	24"	8"	8"	18	18'- 0"	18	18'- 0"	2	2'- 0"	7	9"	18'- 7"	6	9"	19'- 8"	--	---	-----	-----	4	9"	3'- 10"	4'- 6"	8'- 1"	4	12"	7'- 8"	4	9"	7'- 8"
9	6	24"	24"	8"	8"	18	18'- 0"	18	18'- 0"	4	4'- 0"	6	9"	18'- 7"	6	9"	19'- 8"	--	---	-----	-----	4	9"	3'- 2"	5'- 6"	8'- 5"	5	8"	9'- 8"	4	9"	9'- 8"
9	8	24"	24"	8"	8"	18	18'- 0"	18	18'- 0"	6	6'- 0"	6	9"	18'- 7"	6	9"	19'- 8"	4	9"	4'- 6"	8'- 8"	4	9"	3'- 2"	6'- 6"	9'- 5"	5	4½"	11'- 8"	4	9"	11'- 8"
9	10	24"	24"	11½"	8"	18	18'- 0"	18	18'- 0"	8	8'- 0"	6	9"	18'-11"	6	9"	20'- 3"	3	9"	4'- 10"	9'- 6"	5	9"	3'- 4"	7'- 9"	10'- 8"	6	6"	13'- 8"	4	9"	13'- 8"
9	12	24"	24"	14"	8"	18	18'- 0"	18	18'- 0"	10	10'- 0"	6	9"	18'-10"	6	9"	20'- 8"	3	9"	5'- 3"	10'- 4"	7	9"	3'- 7"	9'- 1"	12'- 2"	7	9½"	15'- 8"	4	9"	15'- 8"
10	4	26½"	26½"	8"	8"	20	20'- 0"	20	20'- 0"	2	2'- 0"	7	8"	20'- 7"	6	8"	21'- 8"	--	---	-----	-----	4	8"	3'- 10"	4'- 9"	8'- 3"	4	12"	8'- 0"	4	8"	8'- 0"
10	6	26½"	26½"	8"	8"	20	20'- 0"	20	20'- 0"	4	4'- 0"	6	8"	20'- 7"	6	8"	21'- 8"	--	---	-----	-----	4	8"	3'- 2"	5'- 9"	8'- 7"	6	12"	10'- 0"	4	8"	10'- 0"
10	8	26½"	26½"	8"	8"	20	20'- 0"	20	20'- 0"	6	6'- 0"	6	8"	20'- 7"	6	8"	21'- 8"	3	8"	4'- 8"	9'- 2"	4	8"	3'- 2"	6'- 9"	9'- 7"	5	4½"	12'- 0"	4	8"	12'- 0"
10	10	26½"	26½"	11"	8"	20	20'- 0"	20	20'- 0"	8	8'- 0"	6	8"	20'-10"	6	8"	22'- 2"	3	8"	5'- 1"	9'- 11"	5	8"	3'- 4"	7'- 11"	10'- 10"	8	11½"	14'- 0"	4	8"	14'- 0"
10	12	26"	26"	14"	8"	20	20'- 0"	20	20'- 0"	10	10'- 0"	7	9"	20'-10"	7	9"	22'- 8"	--	---	-----	-----	7	9"	4'- 3"	9'- 3"	13'- 0"	8	12"	16'- 0"	4	8"	16'- 0"
12	6	31½"	31½"	8"	8"	24	24'- 0"	24	24'- 0"	4	4'- 0"	8	9"	24'- 7"	6	9"	25'- 8"	--	---	-----	-----	4	9"	4'- 10"	6'- 2"	10'- 8"	6	10½"	10'- 11"	5	10½"	10'- 11"
12	8	31½"	31½"	8"	8"	24	24'- 0"	24	24'- 0"	6	6'- 0"	7	9"	24'- 7"	6	9"	25'- 8"	3	9"	5'- 1"	10'- 0"	4	9"	3'- 10"	7'- 2"	10'- 8"	8	9"	12'- 11"	5	10½"	12'- 11"
12	10	31½"	31½"	9¾"	8"	24	24'- 0"	24	24'- 0"	8	8'- 0"	7	9"	24'- 8"	6	9"	25'-11"	3	9"	5'- 6"	10'- 9"	5	9"	4'- 0"	8'- 4"	11'- 11"	6	5½"	14'- 11"	5	10½"	14'- 11"
12	12	31"	31"	13½"	8"	24	24'- 0"	24	24'- 0"	10	10'- 0"	8	9"	25'- 0"	7	9"	26'- 6"	3	9"	5'- 10"	11'- 6"	6	9"	5'- 1"	9'- 6"	14'- 1"	8	12"	16'- 9"	5	10½"	16'- 9"

A COPY OF THE ORIGINAL SEALED AND SIGNED DRAWING IS ON FILE IN THE CENTRAL OFFICE.

VDOT
ROAD AND BRIDGE STANDARDS

SHEET 1 OF 2 | REVISION DATE
1003.17 | 07/11

DOUBLE BOX CULVERTS

40 TO 50 FT. FILLS

VIRGINIA DEPARTMENT OF TRANSPORTATION

SPECIFICATION REFERENCE

BCD-50

FOR TYPICAL SECTION, NOTES AND OTHER DETAILS, REFER TO STANDARD BCD-DT.

SPAN (FT.)	HGHT (FT.)	REINFORCING STEEL BT1 SIZE	SPACING c-c	a	b	c	d	e	f	g	LENGTH	NO. BL1 #4 BARS	NO. BL2 #3 BARS	REINFORCING STEEL (LBS/LONG. JT)	QUAN./LF CONCRETE CLASS A4 (CY/LF)	REINFORCING STEEL (LBS/LF)	HEADWALLS G HEADWALL LENGTH	HW1 SIZE	HW1 LENGTH	NO. HW2 BARS	NO. HW3 BARS	INLET CONCRETE CL. A4 (CY)	INLET REINFORCING STEEL (LBS)	OUTLET CONCRETE CL. A4 (CY)	OUTLET REINFORCING STEEL (LBS)	WINGWALL
3	3	4	12"	2'- 6"	0'- 5¼"	1'- 10"	0'- 7"	0'- 4½"	7'- 8"	-----	7'- 11"	32	12	30.956	0.756	79.640	9'- 6"	6	9'- 2"	1	4	1.445	67.988	1.437	55.073	B
3	4	4	12"	2'- 6"	0'- 5¼"	1'- 10"	0'- 7"	0'- 4½"	7'- 8"	-----	7'- 11"	32	18	33.065	0.830	85.904	9'- 6"	6	9'- 2"	1	5	1.544	71.439	1.530	55.073	D
4	3	4	12"	3'- 1"	0'- 7½"	2'- 3"	0'-10⅛"	0'- 6¾"	9'- 8"	-----	10'- 1"	40	12	37.636	1.008	94.710	11'- 6"	6	11'- 2"	1	4	1.614	80.004	1.613	67.089	B
4	4	4	12"	3'- 1"	0'- 7½"	2'- 3"	0'-10⅛"	0'- 6¾"	9'- 8"	-----	10'- 1"	40	18	39.745	1.082	100.974	11'- 6"	6	11'- 2"	1	5	1.716	83.455	1.708	67.089	D
4	5	4	12"	3'- 1"	0'- 7¼"	2'- 3"	0'- 9¾"	0'- 6½"	9'- 8"	-----	10'- 1"	40	24	41.860	1.140	111.954	11'- 6"	6	11'- 2"	1	6	1.815	86.907	1.801	67.089	F
4	6	4	12"	3'- 1"	0'- 7¼"	2'- 3"	0'- 9¾"	0'- 6½"	9'- 8"	-----	10'- 1"	40	30	43.975	1.212	139.379	11'- 6"	6	11'- 2"	1	7	1.913	90.358	1.894	67.089	H
5	3	4	10"	3'- 8"	0'-10½"	2'- 8"	1'- 2⅜"	0'- 9¾"	11'- 8"	-----	12'- 4"	48	12	44.310	1.372	102.348	13'- 6"	6	13'- 2"	1	4	1.755	92.020	1.761	79.105	B
5	4	4	10"	3'- 8"	0'-10"	2'- 8"	1'- 1⅝"	0'- 9¼"	11'- 8"	-----	12'- 3"	48	18	46.425	1.408	108.467	13'- 6"	6	13'- 2"	1	5	1.854	95.471	1.853	79.105	D
5	5	4	10"	3'- 8"	0'-10"	2'- 8"	1'- 1⅝"	0'- 9¼"	11'- 8"	-----	12'- 3"	48	24	48.540	1.482	120.249	13'- 6"	6	13'- 2"	1	6	1.953	98.923	1.946	79.105	F
5	6	4	10"	3'- 8"	0'- 9¾"	2'- 8"	1'- 1¼"	0'- 9"	11'- 8"	-----	12'- 3"	48	30	50.655	1.536	132.826	13'- 6"	6	13'- 2"	1	7	2.052	102.374	2.039	79.105	H
5	7	4	10"	3'- 9"	0'-10"	2'- 8"	1'- 1⅝"	0'- 9¼"	11'- 9"	-----	12'- 4"	48	36	52.770	1.656	161.030	13'- 6"	6	13'- 2"	1	8	2.155	105.825	2.136	79.105	J
6	4	4	9"	4'- 4"	1'- 0½"	3'- 0"	1'- 5⅛"	0'-11¾"	13'- 8"	-----	14'- 5"	56	18	53.105	1.793	170.667	15'- 6"	6	15'- 2"	1	5	1.980	107.487	1.986	91.121	E
6	5	4	9"	4'- 4"	1'- 0½"	3'- 0"	1'- 5⅛"	0'-11¾"	13'- 8"	-----	14'- 5"	56	24	55.220	1.866	183.206	15'- 6"	6	15'- 2"	1	6	2.085	110.939	2.085	91.121	G
6	6	4	9"	4'- 4"	1'- 0½"	3'- 0"	1'- 5⅛"	0'-11¾"	13'- 8"	-----	14'- 5"	56	30	57.335	1.939	196.142	15'- 6"	6	15'- 2"	1	7	2.184	114.390	2.178	91.121	I
6	7	4	9"	4'- 4"	1'- 0½"	3'- 0"	1'- 5⅛"	0'-11¾"	13'- 8"	-----	14'- 5"	56	36	59.450	2.010	229.353	15'- 6"	6	15'- 2"	1	8	2.283	117.841	2.270	91.121	K
6	8	4	9"	4'- 5"	1'- 0½"	3'- 0"	1'- 5⅛"	0'-11¾"	13'- 11"	-----	14'- 8"	56	42	61.565	2.183	247.076	15'- 6"	6	15'- 2"	1	9	2.388	121.293	2.369	91.121	M
7	4	5	9"	4'- 11"	1'- 3"	3'- 5"	1'- 8⅝"	1'- 2⅛"	15'- 8"	-----	16'- 7"	64	18	59.785	2.238	242.577	17'- 6"	6	17'- 2"	1	5	2.072	119.503	2.085	103.137	E
7	6	5	8"	4'- 11"	1'- 2¾"	3'- 5"	1'- 8¼"	1'- 1⅞"	15'- 8"	-----	16'- 7"	64	30	64.015	2.359	269.293	17'- 6"	6	17'- 2"	1	7	2.255	126.406	2.255	103.137	I
7	8	4	8"	5'- 0"	1'- 2¾"	3'- 5"	1'- 8⅜"	1'- 2"	15'- 9"	-----	16'- 9"	64	42	68.245	2.573	308.734	17'- 6"	6	17'- 2"	1	9	2.453	133.309	2.441	103.137	M
7	10	4	8"	5'- 3"	1'- 3"	3'- 5"	1'- 8¾"	1'- 2¼"	16'- 3"	-----	17'- 3"	64	54	72.475	2.998	366.819	17'- 6"	6	17'- 2"	1	11	2.526	140.211	2.500	103.137	Q
8	4	6	9"	5'- 6"	1'- 5½"	3'- 10"	2'- 0"	1'- 4½"	17'- 8"	-----	18'- 9"	72	18	66.465	2.746	292.460	19'- 6"	6	19'- 2"	1	5	2.121	131.519	2.141	115.153	E
8	6	6	9"	5'- 7"	1'- 5"	3'- 10"	1'-11¼"	1'- 4"	17'- 8"	-----	18'- 9"	72	30	70.695	2.837	320.630	19'- 6"	6	19'- 2"	1	7	2.328	138.422	2.335	115.153	I
8	8	5	9"	5'- 7"	1'- 5½"	3'- 10"	2'- 0⅛"	1'- 4⅝"	17'- 9"	-----	18'- 11"	72	42	74.925	3.109	356.576	19'- 6"	6	19'- 2"	1	9	2.526	145.325	2.520	115.153	M
8	10	5	9"	5'- 10"	1'- 5½"	3'- 10"	2'- 0⅛"	1'- 4⅝"	18'- 3"	-----	19'- 5"	72	54	79.155	3.518	399.907	19'- 6"	6	19'- 2"	1	11	2.580	152.227	2.561	115.153	Q
9	4	6	9"	6'- 1"	1'- 8"	4'- 3"	2'- 3½"	1'- 7"	19'- 8"	-----	20'- 11"	80	18	73.145	3.314	376.717	21'- 6"	6	21'- 2"	1	5	2.148	143.535	2.173	127.169	F
9	6	6	9"	6'- 1"	1'- 8"	4'- 3"	2'- 3½"	1'- 7"	19'- 8"	-----	20'- 11"	80	30	77.375	3.462	379.124	21'- 6"	6	21'- 2"	1	7	2.356	150.438	2.369	127.169	J
9	8	6	9"	6'- 1"	1'- 8"	4'- 3"	2'- 3½"	1'- 7"	19'- 8"	-----	20'- 11"	80	42	81.605	3.604	456.056	21'- 6"	6	21'- 2"	1	9	2.564	157.341	2.565	127.169	N
9	10	6	9"	6'- 5"	1'- 8"	4'- 3"	2'- 3½"	1'- 7"	20'- 3"	-----	21'- 6"	80	54	85.835	4.052	501.203	21'- 6"	6	21'- 2"	1	11	2.614	164.243	2.601	127.169	R
9	12	6	9"	6'- 7"	1'- 8"	4'- 3"	2'- 3½"	1'- 7"	20'- 8"	-----	21'- 11"	80	66	90.065	4.483	586.026	21'- 6"	6	21'- 2"	1	13	2.669	171.146	2.643	127.169	V
10	4	6	8"	6'- 8"	1'-10½"	4'- 8"	2'- 7⅛"	1'- 9½"	21'- 8"	-----	23'- 1"	88	18	79.825	3.944	453.636	23'- 6"	6	23'- 2"	1	5	2.157	155.551	2.190	139.185	F
10	6	6	8"	6'- 8"	1'-10½"	4'- 8"	2'- 7⅛"	1'- 9½"	21'- 8"	-----	23'- 1"	88	30	84.055	4.093	449.514	23'- 6"	6	23'- 2"	1	7	2.355	162.454	2.375	139.185	J
10	8	6	8"	6'- 8"	1'-10½"	4'- 8"	2'- 7⅛"	1'- 9½"	21'- 8"	-----	23'- 1"	88	42	88.285	4.235	519.462	23'- 6"	6	23'- 2"	1	9	2.565	169.357	2.573	139.185	N
10	10	6	8"	6'- 11"	1'-10½"	4'- 8"	2'- 7⅛"	1'- 9½"	22'- 2"	-----	23'- 7"	88	54	92.515	4.646	575.846	23'- 6"	6	23'- 2"	1	11	2.611	176.259	2.605	139.185	R
10	12	7	9"	7'- 3"	1'-10"	4'- 8"	2'- 6¼"	1'- 8¾"	22'- 8"	-----	24'- 0"	88	66	96.745	5.054	710.678	23'- 6"	6	23'- 2"	1	13	2.663	183.162	2.644	139.185	V
12	6	7	9"	7'- 11"	2'- 3½"	5'- 5"	3'- 2"	2'- 2¼"	25'- 8"	-----	27'- 5"	104	30	97.415	5.537	609.729	27'- 6"	6	27'- 2"	1	7	2.259	186.486	2.292	163.217	K
12	8	7	9"	7'- 11"	2'- 3½"	5'- 5"	3'- 2"	2'- 2¼"	25'- 8"	-----	27'- 5"	104	42	101.645	5.682	652.348	27'- 6"	6	27'- 2"	1	9	2.472	193.389	2.493	163.217	O
12	10	7	9"	8'- 0"	2'- 3½"	5'- 5"	3'- 2"	2'- 2¼"	25'- 11"	-----	27'- 9"	104	54	105.875	5.991	700.081	27'- 6"	6	27'- 2"	1	11	2.509	200.291	2.516	163.217	S
12	12	7	9"	8'- 5"	2'- 3"	5'- 5"	3'- 1⅜"	2'- 1¾"	26'- 6"	-----	28'- 4"	104	66	110.105	6.467	837.137	27'- 6"	6	27'- 2"	1	13	2.544	207.194	2.538	163.217	W

A COPY OF THE ORIGINAL SEALED AND SIGNED DRAWING IS ON FILE IN THE CENTRAL OFFICE.

SPECIFICATION REFERENCE

DOUBLE BOX CULVERTS

40 TO 50 FT. FILL

VIRGINIA DEPARTMENT OF TRANSPORTATION

VDOT

ROAD AND BRIDGE STANDARDS

REVISION DATE 07/11

SHEET 2 OF 2

1003.18

BCT-DT

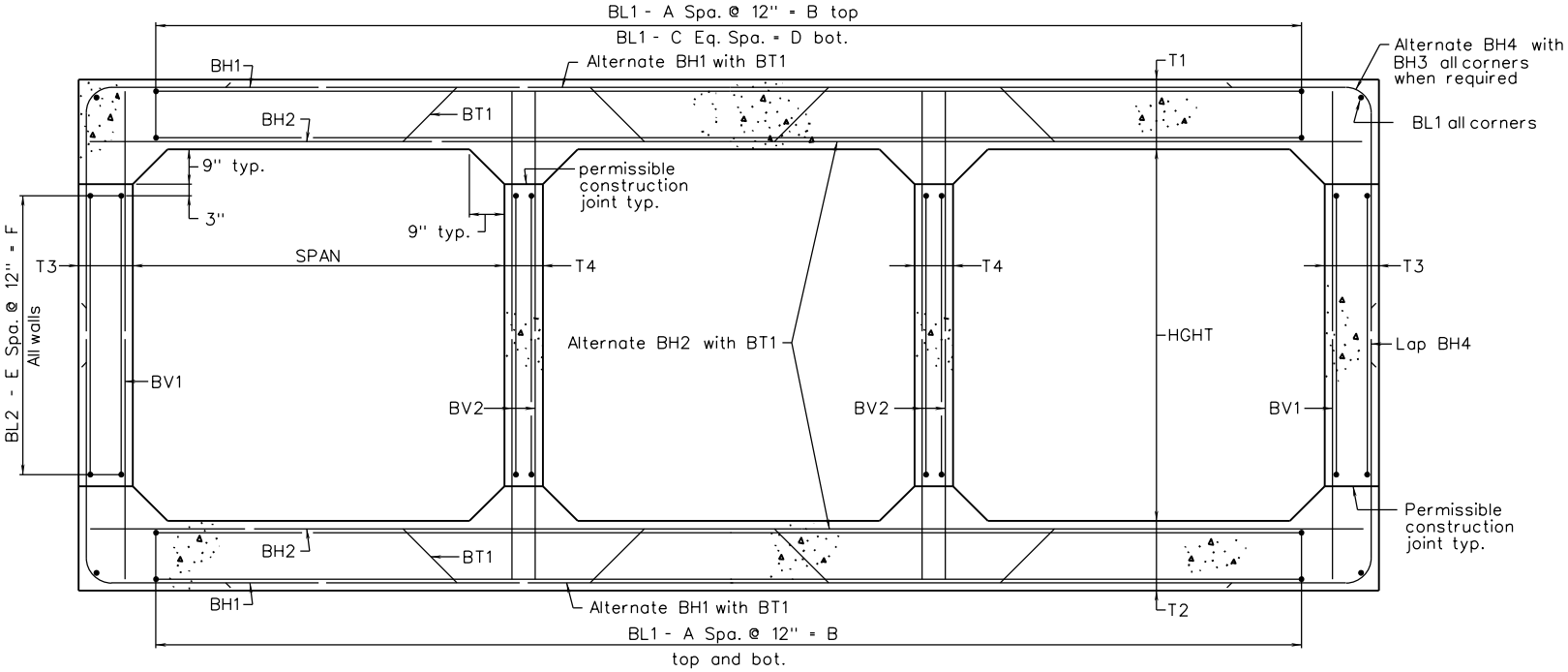

TYPICAL SECTION

A copy of the original sealed and signed drawing is on file in the central office.

VDOT ROAD AND BRIDGE STANDARDS	TRIPLE BOX CULVERTS STANDARD DETAILS VIRGINIA DEPARTMENT OF TRANSPORTATION	SPECIFICATION REFERENCE
SHEET 1 OF 3 / REVISION DATE		
1004.01 / 07/11		

GENERAL NOTE

Capacity: AASHTO HI-93 Loading.

Specifications:

Construction - Virginia Department of Transportation Road and Bridge Specifications.

Design - AASHTO LRFD Bridge Design Specifications, 5th Edition 2010; 2011 Interim Specifications; and VDOT Modifications.

All concrete shall be Class A4.

Deformed reinforcing bars shall conform to ASTM A615, Grade 60. All reinforcing bar dimensions on the detailed drawings are to centers of bars except where otherwise noted and are subject to fabrication and construction tolerances.

Construction joints shall be constructed and bonded in accordance with the current Road and Bridge Specifications.

Barrels more than 35' in length shall be poured in sections by providing vertical construction joints, not exceeding 25' between joints nor more than 30' from ends of barrels.

** All bends shall be made with a pin diameter as listed in TABLE A except for Bars BH3 and BH4 which shall have a pin diameter of 24 bar diameters.

Dimensions on bar diagrams are out-to-out of bars. Bars are straight and #4 size unless otherwise shown. BL2 shall be #3 size.

The number of BL1 and BL2 bars shown in the table is the number of longitudinal bars shown in the Typical Section and may not equal the total number of bars required. BL1 and BL2 shall have a lap of 30 bar diameters at splices. At construction joints, first placed bars shall project 30 bar diameters beyond the joint. Estimated QUAN./LF shown for reinforcing steel does not include quantity for laps of BL1 and BL2 bars. The additional weight per longitudinal lap is shown in the table.

The minimum cover of main reinforcing bars shall be 2½" from the face of the concrete for culverts under 0 to 2 foot fills and shall be 2" from the face of cencrete for all other culverts.

All reinforcing steel for culverts under 0 to 2 foot fills shall be Low Carbon/Chromium Reinforcing Steel conforming to ASTM A1035.

At the Contractor's option, BV1 and BV2 bars may be spliced at the permissible construction joint in order to facilitate construction. No additional compensation shall be provided for the increase in reinforcing steel quantity due to the splices.

Bar HW2 shall be 4" less than culvert height in length.

Headwall quantities shown assume wingwalls are to be built at a 45° angle to the headwall.

The designs are applicable to the fill height and other conditions indicated. Any change in the conditions invalidates these designs.

Wingwalls referenced by letter apply when the acceptable foundation level is the same for both box and wings. If foundation levels are different, the height of the wingwall shall be adjusted by selection of another lettered wingwall of appropriate height. For wingwall details, refer to standard series BCW for the appropriate fill slope.

For details of extending existing boxes, refer to Standard BCE-01.

For modification of details for skewed culverts, see the skewed box details included in the road plans.

This standard shall be used with the BCT standard series.

A COPY OF THE ORIGINAL SEALED AND SIGNED DRAWING IS ON FILE IN THE CENTRAL OFFICE.

SPECIFICATION REFERENCE	TRIPLE BOX CULVERTS STANDARD DETAILS VIRGINIA DEPARTMENT OF TRANSPORTATION	VDOT ROAD AND BRIDGE STANDARDS	
		REVISION DATE	SHEET 2 OF 3
		07/12	1004.02

BCT-DT

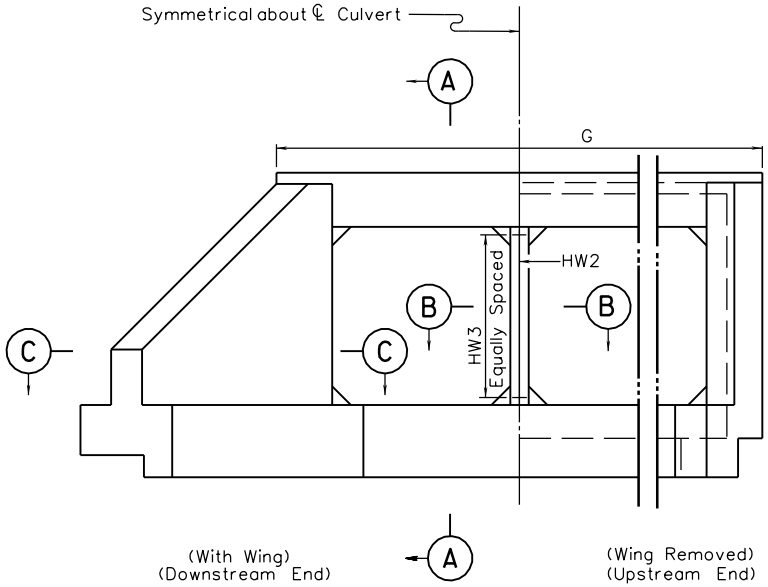

END ELEVATION

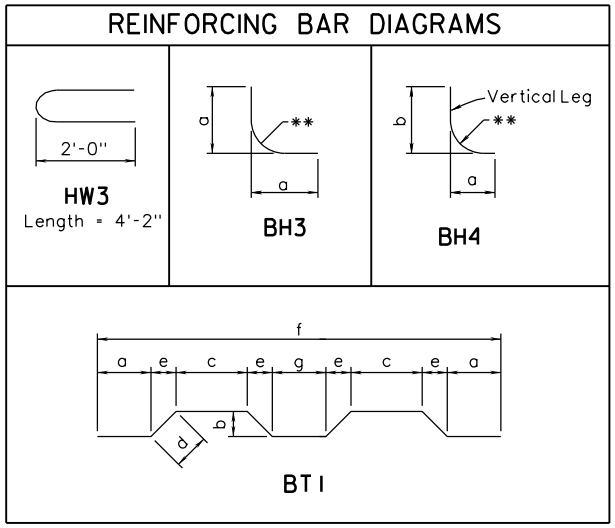

TABLE A	
Bar Size	Pin Dia.
#3	2¼"
#4	3"
#5	3¾"
#6	4½"
#7	5¼"
#8	6"
#9	9"

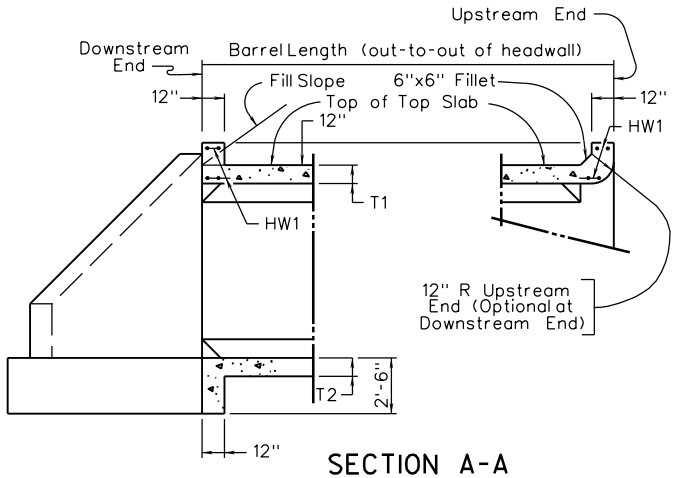

SECTION A-A
(With Wing)

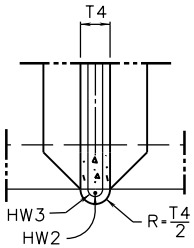

PART SECTION B-B
UPSTREAM END
(Optional at Downstream End)

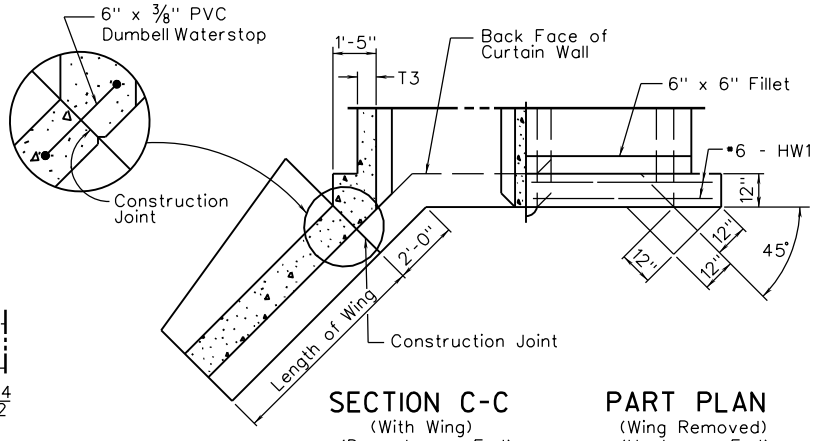

SECTION C-C
(With Wing)
(Downstream End)

PART PLAN
(Wing Removed)
(Upstream End)

VDOT
ROAD AND BRIDGE STANDARDS

SHEET 3 OF 3
1004.03

REVISION DATE
07/11

TRIPLE BOX CULVERTS

STANDARD DETAILS

VIRGINIA DEPARTMENT OF TRANSPORTATION

SPECIFICATION REFERENCE

BCT-DT

THIS PAGE INTENTIONALLY LEFT BLANK

SPECIFICATION REFERENCE	TRIPLE BOX CULVERTS STANDARD DETAILS VIRGINIA DEPARTMENT OF TRANSPORTATION	VDOT ROAD AND BRIDGE STANDARDS	
		REVISION DATE 07/11	SHEET 1 OF 1 1004.04

BCT-02

FOR TYPICAL SECTION, NOTES AND OTHER DETAILS, REFER TO STANDARD BCT-DT.

DIMENSIONS						REINFORCING STEEL																										
SPAN	HGHT	T1	T2	T3	T4							BH1			BH2			BH3				BH4					BV1			BV2		
(FT.)	(FT.)	TOP SLAB	BOTTOM SLAB	EXTERIOR WALL (IN.)	INTERIOR WALL (IN.)	A	B	C	D	E	F	SIZE	SPACING C-C	LENGTH	SIZE	SPACING C-C	LENGTH	SIZE	SPACING C-C	a	LENGTH	SIZE	SPACING C-C	a	b	LENGTH	SIZE	SPACING C-C	LENGTH	SIZE	SPACING C-C	LENGTH
3	3	8"	8"	8"	8"	9	9'- 0"	18	9'- 0"	1	1'- 0"	4	12"	11'- 2"	4	12"	11'- 4"	--	---	-----	-----	4	12"	2'- 1¼"	2'- 8"	4'-6"	4	12"	4'- 0"	4	12"	4'- 0"
3	4	8"	8"	8"	8"	9	9'- 0"	18	9'- 0"	2	2'- 0"	4	12"	11'- 2"	4	12"	11'- 4"	--	---	-----	-----	4	12"	2'- 1¼"	3'- 2"	5'-0"	4	12"	5'- 0"	4	12"	5'- 0"
4	3	8¼"	8¼"	8"	8"	12	12'- 0"	24	12'- 0"	1	1'- 0"	4	12"	13'- 9"	4	12"	14'- 4"	4	12"	2'- 3⅝"	4'- 4"	4	12"	2'- 3⅝"	2'- 8¼"	4'-9"	4	12"	4'- 0"	4	12"	4'- 0"
4	4	8¼"	8¼"	8"	8"	12	12'- 0"	24	12'- 0"	2	2'- 0"	4	12"	13'- 9"	4	12"	14'- 4"	4	12"	2'- 3⅝"	4'- 4"	4	12"	2'- 3⅝"	3'- 2¼"	5'-3"	4	12"	5'- 0"	4	12"	5'- 0"
4	5	8¼"	8¼"	8"	8"	12	12'- 0"	24	12'- 0"	3	3'- 0"	4	12"	13'- 9"	4	12"	14'- 4"	4	12"	2'- 6"	4'- 9"	4	12"	2'- 3⅝"	3'- 8¼"	5'-9"	4	12"	6'- 0"	4	12"	6'- 0"
4	6	8¼"	8¼"	8"	8"	12	12'- 0"	24	12'- 0"	4	4'- 0"	4	12"	13'- 9"	4	12"	14'- 4"	4	12"	2'- 9"	5'- 5"	4	12"	2'- 3⅝"	4'- 2¼"	6'-3"	4	12"	7'- 0"	4	12"	7'- 0"
5	3	8¼"	8¼"	8"	8"	15	15'- 0"	30	15'- 0"	1	1'- 0"	4	11"	16'- 4"	5	11"	17'- 4"	4	11"	2'- 6"	4'- 9"	4	11"	2'- 6"	2'- 8¼"	4'-11"	4	12"	4'- 0"	4	12"	4'- 0"
5	4	8¼"	8¼"	8"	8"	15	15'- 0"	30	15'- 0"	2	2'- 0"	4	10"	16'- 4"	4	10"	17'- 4"	4	10"	2'- 6"	4'- 9"	4	10"	2'- 6"	3'- 2¼"	5'-5"	4	12"	5'- 0"	4	10"	5'- 0"
5	5	8¼"	8¼"	8"	8"	15	15'- 0"	30	15'- 0"	3	3'- 0"	4	10"	16'- 4"	4	10"	17'- 4"	4	10"	2'- 6"	4'- 9"	4	10"	2'- 6"	3'- 8¼"	5'-11"	4	12"	6'- 0"	4	10"	6'- 0"
5	6	8¼"	8¼"	8"	8"	15	15'- 0"	30	15'- 0"	4	4'- 0"	4	10"	16'- 4"	4	10"	17'- 4"	4	10"	2'- 9"	5'- 5"	4	10"	2'- 6"	4'- 2¼"	6'-5"	4	12"	7'- 0"	4	10"	7'- 0"
5	7	8¼"	8¼"	8"	8"	15	15'- 0"	30	15'- 0"	5	5'- 0"	4	9"	16'- 4"	4	9"	17'- 4"	4	9"	2'-11"	5'- 8"	4	9"	2'- 6"	4'- 8¼"	6'-11"	4	12"	8'- 0"	4	10"	8'- 0"
6	4	9¾"	9¾"	8"	8"	18	18'- 0"	36	18'- 0"	2	2'- 0"	4	11"	19'- 3"	4	11"	20'- 4"	4	11"	2'- 8⅜"	5'- 2"	4	11"	2'- 8⅜"	3'- 3¾"	5'-9"	4	12"	5'- 3"	4	10"	5'- 3"
6	5	9¾"	9¾"	8"	8"	18	18'- 0"	36	18'- 0"	3	3'- 0"	4	10"	19'- 3"	4	10"	20'- 4"	4	10"	2'- 8⅜"	5'- 2"	4	10"	2'- 8⅜"	3'- 9¾"	6'-3"	4	12"	6'- 3"	4	10"	6'- 3"
6	6	9¾"	9¾"	8"	8"	18	18'- 0"	36	18'- 0"	4	4'- 0"	4	10"	19'- 3"	4	10"	20'- 4"	4	10"	2'-11"	5'- 8"	4	10"	2'- 8⅜"	4'- 3¾"	6'-9"	4	12"	7'- 3"	4	10"	7'- 3"
6	7	9¾"	9¾"	8"	8"	18	18'- 0"	36	18'- 0"	5	5'- 0"	4	9"	19'- 3"	4	9"	20'- 4"	4	9"	3'- 1"	5'-11"	4	9"	2'- 8⅜"	4'- 9¾"	7'-3"	4	12"	8'- 3"	4	10"	8'- 3"
6	8	9¾"	9¾"	8"	8"	18	18'- 0"	36	18'- 0"	6	6'- 0"	4	9"	19'- 3"	4	9"	20'- 4"	4	9"	3'- 4"	6'- 5"	4	9"	2'- 8⅜"	5'- 3¾"	7'-9"	4	12"	9'- 3"	4	10"	9'- 3"
7	4	9½"	9½"	8"	8"	21	21'- 0"	42	21'- 0"	2	2'- 0"	4	9"	22'- 3"	4	9"	23'- 4"	4	9"	2'-10¾"	5'- 6"	4	9"	2'-10¾"	3'- 3½"	5'-11"	4	12"	5'- 3"	4	9½"	5'- 3"
7	6	9½"	9½"	8"	8"	21	21'- 0"	42	21'- 0"	4	4'- 0"	4	9"	22'- 3"	5	9"	23'- 4"	4	9"	2'-10¾"	5'- 6"	4	9"	2'-10¾"	4'- 3½"	6'-11"	4	12"	7'- 3"	4	8½"	7'- 3"
7	8	9¾"	9¾"	8"	8"	21	21'- 0"	42	21'- 0"	6	6'- 0"	4	8"	22'- 3"	4	8"	23'- 4"	4	8"	3'- 4"	6'- 5"	4	8"	2'-10¾"	5'- 3¾"	7'-11"	4	12"	9'- 3"	4	9"	9'- 3"
7	10	9¾"	9¾"	8"	8"	21	21'- 0"	42	21'- 0"	8	8'- 0"	4	8"	22'- 3"	4	8"	23'- 4"	4	8"	3'- 8"	6'-11"	4	8"	2'-10¾"	6'- 3¾"	8'-11"	4	12"	11'- 3"	4	9"	11'- 3"
8	4	9"	9"	8"	8"	24	24'- 0"	48	24'- 0"	2	2'- 0"	4	8"	25'- 0"	4	8"	26'- 4"	4	8"	3'- 1¼"	5'-11"	4	8"	3'- 1¼"	3'- 3"	6'-1"	4	12"	5'- 2"	4	7½"	5'- 2"
8	6	9"	9"	8"	8"	24	24'- 0"	48	24'- 0"	4	4'- 0"	5	12"	25'- 0"	5	12"	26'- 4"	5	12"	3'- 1¼"	5'-11"	5	12"	3'- 1¼"	4'- 3"	7'-0"	4	12"	7'- 2"	4	7"	7'- 2"
8	8	9¼"	9¼"	8"	8"	24	24'- 0"	48	24'- 0"	6	6'- 0"	5	11"	25'- 0"	5	11"	26'- 4"	5	11"	3'- 4"	6'- 5"	5	11"	3'- 1¼"	5'- 3¼"	8'-1"	4	12"	9'- 2"	4	7"	9'- 2"
8	10	9¾"	9¾"	8"	8"	24	24'- 0"	48	24'- 0"	8	8'- 0"	5	10"	25'- 0"	5	10"	26'- 4"	5	10"	3'- 8"	6'-11"	5	10"	3'- 1¼"	6'- 3¾"	9'-1"	4	12"	11'- 3"	4	7½"	11'- 3"
9	4	9¼"	9¼"	8"	8"	27	27'- 0"	54	27'- 0"	2	2'- 0"	5	11"	28'- 0"	5	11"	29'- 4"	4	11"	3'- 3⅝"	6'- 4"	6	11"	3'-10"	3'- 7"	7'-0"	4	12"	5'- 2"	4	6½"	5'- 2"
9	6	9½"	9½"	8"	8"	27	27'- 0"	54	27'- 0"	4	4'- 0"	5	10"	28'- 0"	5	10"	29'- 4"	4	10"	3'- 3⅝"	6'- 4"	5	10"	3'- 3⅝"	4'- 3½"	7'-3"	4	12"	7'- 3"	4	6½"	7'- 3"
9	8	9½"	9½"	8"	8"	27	27'- 0"	54	27'- 0"	6	6'- 0"	5	10"	28'- 0"	5	10"	29'- 4"	5	10"	3'- 3⅝"	6'- 3"	5	10"	3'- 3⅝"	5'- 3½"	8'-3"	4	12"	9'- 3"	4	6½"	9'- 3"
9	10	9½"	9½"	8"	8"	27	27'- 0"	54	27'- 0"	8	8'- 0"	5	9"	28'- 0"	5	9"	29'- 4"	5	9"	3'- 8"	6'-11"	5	9"	3'- 3⅝"	6'- 3½"	9'-3"	4	12"	11'- 3"	4	6½"	11'- 3"
9	12	9¾"	9¾"	8"	8"	27	27'- 0"	54	27'- 0"	10	10'- 0"	6	12"	28'- 0"	6	12"	29'- 4"	6	12"	4'- 1"	7'-11"	6	12"	3'-10"	7'- 7"	11'-1"	5	11½"	13'- 3"	4	6½"	13'- 3"
10	4	9½"	9½"	8"	8"	30	30'- 0"	60	30'- 0"	2	2'- 0"	5	9"	31'- 0"	5	9"	32'- 4"	--	---	-----	-----	5	9"	3'- 6"	3'- 3½"	6'-6"	4	12"	5'- 3"	5	9½"	5'- 3"
10	6	9½"	9½"	8"	8"	30	30'- 0"	60	30'- 0"	4	4'- 0"	5	10"	31'- 0"	5	10"	32'- 4"	4	10"	3'- 6"	6'- 9"	5	10"	3'- 6"	4'- 3½"	7'-6"	4	12"	7'- 3"	5	9½"	7'- 3"
10	8	9½"	9½"	8"	8"	30	30'- 0"	60	30'- 0"	6	6'- 0"	5	9"	31'- 0"	5	9"	32'- 4"	4	9"	3'- 6"	6'- 9"	5	9"	3'- 6"	5'- 3½"	8'-6"	4	12"	9'- 3"	5	9½"	9'- 3"
10	10	9¾"	9¾"	8"	8"	30	30'- 0"	60	30'- 0"	8	8'- 0"	5	9"	31'- 0"	5	9"	32'- 4"	4	9"	3'- 8"	6'-11"	5	9"	3'- 6"	6'- 3¾"	9'-6"	4	12"	11'- 3"	4	6½"	11'- 3"
10	12	9¾"	9¾"	8"	8"	30	30'- 0"	60	30'- 0"	10	10'- 0"	6	12"	31'- 0"	6	12"	32'- 4"	4	12"	4'- 1"	7'-11"	6	12"	4'- 0"	7'- 7"	11'-3"	5	11½"	13'- 3"	4	7"	13'- 3"
12	6	10"	10"	8"	8"	36	36'- 0"	72	36'- 0"	4	4'- 0"	5	9"	37'- 0"	5	9"	38'- 4"	--	---	-----	-----	6	9"	4'- 5"	4'- 8"	8'- 8"	4	12"	7'- 4"	5	8"	7'- 4"
12	8	10"	10"	8"	8"	36	36'- 0"	72	36'- 0"	6	6'- 0"	6	12"	37'- 0"	6	12"	38'- 4"	--	---	-----	-----	7	12"	4'-10"	5'-11"	10'- 3"	4	12"	9'- 4"	5	8"	9'- 4"
12	10	10"	10"	8"	8"	36	36'- 0"	72	36'- 0"	8	8'- 0"	5	8"	37'- 0"	5	8"	38'- 4"	4	8"	3'-10¾"	7'- 6"	5	8"	3'-10¾"	6'- 4"	9'-11"	4	12"	11'- 4"	4	5½"	11'- 4"
12	12	10¼"	10¼"	8"	8"	36	36'- 0"	72	36'- 0"	10	10'- 0"	6	11"	37'- 0"	6	11"	38'- 4"	4	11"	4'- 1"	7'-11"	6	11"	4'- 5"	7'- 8"	11'- 8"	5	11½"	13'- 5"	4	6"	13'- 5"

A COPY OF THE ORIGINAL SEALED AND SIGNED DRAWING IS ON FILE IN THE CENTRAL OFFICE.

VDOT
ROAD AND BRIDGE STANDARDS

SHEET 1 OF 2 | REVISION DATE
1004.05 | 07/11

TRIPLE BOX CULVERTS

0 TO 2 FT. FILLS

VIRGINIA DEPARTMENT OF TRANSPORTATION

SPECIFICATION REFERENCE

BCT-02

FOR TYPICAL SECTION, NOTES AND OTHER DETAILS, REFER TO STANDARD BCT-DT.

SPAN (FT.)	HGHT (FT.)	REINFORCING STEEL BT1 SIZE	SPACING c-c	a	b	c	d	e	f	g	LENGTH	NO. BL1 #4 BARS	NO. BL2 #3 BARS	REINFORCING STEEL (LBS/LONG. JT)	QUAN./LF CONCRETE CLASS A4 (CY/LF)	REINFORCING STEEL (LBS/LF)	HEADWALLS G HEADWALL LENGTH	HW1 SIZE	HW1 LENGTH	NO. HW2 BARS	NO. HW3 BARS	INLET CONCRETE CL. A4 (CY)	INLET REINFORCING STEEL (LBS)	OUTLET CONCRETE CL. A4 (CY)	OUTLET REINFORCING STEEL (LBS)	WINGWALL
3	3	4	12"	2'- 8⅞"	0'- 4½"	1'- 6⅝"	0'- 5⅞"	0'- 3¾"	11'- 3⅞"	1'- 5⅞"	11'-10"	53	16	49.903	0.989	115.345	13'- 2"	6	12'-10"	2	8	1.827	102.932	1.808	77.103	A
3	4	4	12"	2'- 8⅞"	0'- 4½"	1'- 6⅝"	0'- 5⅞"	0'- 3¾"	11'- 3⅞"	1'- 5⅞"	11'-10"	53	24	52.727	1.087	123.697	13'- 2"	6	12'-10"	2	10	1.932	109.835	1.901	77.103	C
4	3	4	12"	3'- 6⅜"	0'- 4¾"	1'-11¼"	0'- 6¼"	0'- 4"	14'- 4"	2'- ¾"	14'-11"	68	16	62.428	1.157	149.191	16'- 2"	6	15'-10"	2	8	2.124	120.956	2.115	95.127	A
4	4	4	12"	3'- 6⅜"	0'- 4¾"	1'-11¼"	0'- 6¼"	0'- 4"	14'- 4"	2'- ¾"	14'-11"	68	24	65.252	1.255	157.543	16'- 2"	6	15'-10"	2	10	2.229	127.859	2.208	95.127	C
4	5	4	12"	3'- 6⅜"	0'- 4¾"	1'-11¼"	0'- 6¼"	0'- 4"	14'- 4"	2'- ¾"	14'-11"	68	32	68.076	1.353	171.947	16'- 2"	6	15'-10"	2	12	2.334	134.761	2.300	95.127	E
4	6	4	12"	3'- 6⅜"	0'- 4¾"	1'-11¼"	0'- 6¼"	0'- 4"	14'- 4"	2'- ¾"	14'-11"	68	40	70.900	1.451	182.365	16'- 2"	6	15'-10"	2	14	2.440	141.664	2.393	95.127	G
5	3	4	11"	4'- 4"	0'- 4¾"	2'- 4"	0'- 6¼"	0'- 4"	17'- 4"	2'- 8"	17'-11"	83	16	74.953	1.306	195.032	19'- 2"	6	18'-10"	2	8	2.425	138.980	2.426	113.151	A
5	4	4	10"	4'- 4"	0'- 4¾"	2'- 4"	0'- 6¼"	0'- 4"	17'- 4"	2'- 8"	17'-11"	83	24	77.777	1.404	202.477	19'- 2"	6	18'-10"	2	10	2.531	145.883	2.519	113.151	C
5	5	4	10"	4'- 4"	0'- 4¾"	2'- 4"	0'- 6¼"	0'- 4"	17'- 4"	2'- 8"	17'-11"	83	32	80.601	1.503	211.630	19'- 2"	6	18'-10"	2	12	2.636	152.785	2.611	113.151	E
5	6	4	10"	4'- 4"	0'- 4¾"	2'- 4"	0'- 6¼"	0'- 4"	17'- 4"	2'- 8"	17'-11"	83	40	83.425	1.600	229.318	19'- 2"	6	18'-10"	2	14	2.741	159.688	2.704	113.151	G
5	7	4	9"	4'- 4"	0'- 4¾"	2'- 4"	0'- 6¼"	0'- 4"	17'- 4"	2'- 8"	17'-11"	83	48	86.249	1.697	258.484	19'- 2"	6	18'-10"	2	16	2.846	166.591	2.797	113.151	I
6	4	4	11"	5'- ⅞"	0'- 6¼"	2'- 7¼"	0'- 8⅜"	0'- 5½"	20'- 4"	3'- 1¾"	21'- 1"	98	24	90.302	1.747	218.090	22'- 2"	6	21'-10"	2	10	2.784	163.907	2.782	131.175	D
6	5	4	10"	5'- ⅞"	0'- 6¼"	2'- 7¼"	0'- 8⅜"	0'- 5½"	20'- 4"	3'- 1¾"	21'- 1"	98	32	93.126	1.844	246.684	22'- 2"	6	21'-10"	2	12	2.889	170.809	2.875	131.175	F
6	6	4	10"	5'- ⅞"	0'- 6¼"	2'- 7¼"	0'- 8⅜"	0'- 5½"	20'- 4"	3'- 1¾"	21'- 1"	98	40	95.950	1.942	257.738	22'- 2"	6	21'-10"	2	14	2.994	177.712	2.968	131.175	H
6	7	4	9"	5'- ⅞"	0'- 6¼"	2'- 7¼"	0'- 8⅜"	0'- 5½"	20'- 4"	3'- 1¾"	21'- 1"	98	48	98.774	2.039	285.731	22'- 2"	6	21'-10"	2	16	3.099	184.615	3.060	131.175	J
6	8	4	9"	5'- ⅞"	0'- 6¼"	2'- 7¼"	0'- 8⅜"	0'- 5½"	20'- 4"	3'- 1¾"	21'- 1"	98	56	101.598	2.137	297.193	22'- 2"	6	21'-10"	2	18	3.204	191.517	3.153	131.175	L
7	4	4	9"	5'-10⅝"	0'- 6"	3'- ⅜"	0'- 8"	0'- 5¼"	23'- 4⅛"	3'- 9⅛"	24'- 1"	113	24	102.827	1.885	287.324	25'- 2"	6	24'-10"	2	10	3.085	181.931	3.093	149.199	D
7	6	4	9"	5'-10⅝"	0'- 6"	3'- ⅜"	0'- 8"	0'- 5¼"	23'- 4⅛"	3'- 9⅛"	24'- 1"	113	40	108.475	2.081	328.424	25'- 2"	6	24'-10"	2	14	3.295	195.736	3.278	149.199	H
7	8	4	8"	5'-10½"	0'- 6¼"	3'- ⅛"	0'- 8⅜"	0'- 5½"	23'- 4⅛"	3'- 8⅞"	24'- 1"	113	56	114.123	2.313	348.715	25'- 2"	6	24'-10"	2	18	3.492	209.541	3.450	149.199	L
7	10	4	8"	5'-10½"	0'- 6¼"	3'- ⅛"	0'- 8⅜"	0'- 5½"	23'- 4⅛"	3'- 8⅞"	24'- 1"	113	72	119.771	2.509	371.229	25'- 2"	6	24'-10"	2	22	3.702	223.347	3.636	149.199	P
8	4	4	8"	6'- 8⅜"	0'- 5½"	3'- 5⅝"	0'- 7¼"	0'- 4¾"	26'- 3⅞"	4'- 4⅞"	27'- 0"	128	24	115.352	1.976	337.721	28'- 2"	6	27'-10"	2	10	3.387	199.955	3.405	167.223	C
8	6	5	12"	6'- 8⅜"	0'- 5⅝"	3'- 5⅝"	0'- 7⅜"	0'- 4¾"	26'- 3⅞"	4'- 4⅞"	27'- 0"	128	40	121.000	2.171	368.255	28'- 2"	6	27'-10"	2	14	3.597	213.760	3.591	167.223	G
8	8	5	11"	6'- 8¼"	0'- 5⅞"	3'- 5⅜"	0'- 7¾"	0'- 5"	26'- 3⅞"	4'- 4⅝"	27'- 0"	128	56	126.648	2.406	415.143	28'- 2"	6	27'-10"	2	18	3.810	227.565	3.779	167.223	L
8	10	5	10"	6'- 8"	0'- 6⅜"	3'- 4⅞"	0'- 8⅜"	0'- 5½"	26'- 3⅞"	4'- 4⅛"	27'- 1"	128	72	132.296	2.683	460.552	28'- 2"	6	27'-10"	2	22	3.989	241.371	3.933	167.223	P
9	4	5	11"	7'- 5⅞"	0'- 5⅞"	3'-10¼"	0'- 7¾"	0'- 5"	29'- 4"	4'-11¾"	30'- 0"	143	24	127.877	2.183	409.438	31'- 2"	6	30'-10"	2	10	3.682	217.979	3.710	185.247	D
9	6	5	10"	7'- 5¾"	0'- 6⅛"	3'-10"	0'- 8⅛"	0'- 5¼"	29'- 4"	4'-11½"	30'- 1"	143	40	133.525	2.424	439.558	31'- 2"	6	30'-10"	2	14	3.874	231.784	3.877	185.247	H
9	8	5	10"	7'- 5¾"	0'- 6⅛"	3'-10"	0'- 8⅛"	0'- 5¼"	29'- 4"	4'-11½"	30'- 1"	143	56	139.173	2.619	474.426	31'- 2"	6	30'-10"	2	18	4.084	245.589	4.063	185.247	L
9	10	5	9"	7'- 5¾"	0'- 6⅛"	3'-10"	0'- 8⅛"	0'- 5¼"	29'- 4"	4'-11½"	30'- 1"	143	72	144.821	2.812	534.465	31'- 2"	6	30'-10"	2	22	4.295	259.395	4.248	185.247	P
9	12	6	12"	7'- 5⅝"	0'- 6½"	3'- 9¾"	0'- 8½"	0'- 5½"	29'- 4"	4'-11¼"	30'- 1"	143	88	150.469	3.050	605.750	31'- 2"	6	30'-10"	2	26	4.487	273.200	4.416	185.247	T
10	4	5	9"	8'- 3⅜"	0'- 6⅛"	4'- 2¾"	0'- 8⅛"	0'- 5¼"	32'- 4"	5'- 6¾"	33'- 1"	158	24	140.402	2.401	460.612	34'- 2"	6	33'-10"	2	10	3.953	236.003	3.991	203.271	D
10	6	5	10"	8'- 3⅜"	0'- 6⅛"	4'- 2¾"	0'- 8⅛"	0'- 5¼"	32'- 4"	5'- 6¾"	33'- 1"	158	40	146.050	2.597	477.560	34'- 2"	6	33'-10"	2	14	4.164	249.808	4.177	203.271	H
10	8	5	9"	8'- 3⅜"	0'- 6⅛"	4'- 2¾"	0'- 8⅛"	0'- 5¼"	32'- 4"	5'- 6¾"	33'- 1"	158	56	151.698	2.790	535.891	34'- 2"	6	33'-10"	2	18	4.374	263.613	4.362	203.271	L
10	10	5	9"	8'- 3¼"	0'- 6⅜"	4'- 2½"	0'- 8⅜"	0'- 5½"	32'- 4"	5'- 6½"	33'- 1"	158	72	157.346	3.037	558.313	34'- 2"	6	33'-10"	2	22	4.564	277.419	4.527	203.271	P
10	12	6	12"	8'- 3¼"	0'- 6½"	4'- 2½"	0'- 8½"	0'- 5½"	32'- 4"	5'- 6½"	33'- 1"	158	88	162.994	3.229	624.268	34'- 2"	6	33'-10"	2	26	4.774	291.224	4.713	203.271	T
12	6	5	9"	9'-10⅜"	0'- 6⅝"	4'-11⅞"	0'- 8¾"	0'- 5¾"	38'- 4⅛"	6'- 8⅝"	39'- 1"	188	40	171.100	3.060	593.399	40'- 2"	6	39'-10"	2	14	4.693	285.856	4.726	239.319	H
12	8	6	12"	9'-10⅜"	0'- 6¾"	4'-11⅞"	0'- 8⅞"	0'- 5¾"	38'- 4⅛"	6'- 8⅝"	39'- 1"	188	56	176.748	3.253	652.706	40'- 2"	6	39'-10"	2	18	4.903	299.661	4.912	239.319	L
12	10	5	8"	9'-10⅜"	0'- 6⅝"	4'-11⅞"	0'- 8¾"	0'- 5¾"	38'- 4⅛"	6'- 8⅝"	39'- 1"	188	72	182.396	3.446	703.628	40'- 2"	6	39'-10"	2	22	5.114	313.467	5.097	239.319	P
12	12	6	11"	9'-10¼"	0'- 7"	4'-11⅝"	0'- 9¼"	0'- 6"	38'- 4⅛"	6'- 8⅜"	39'- 2"	188	88	188.044	3.701	742.832	40'- 2"	6	39'-10"	2	26	5.299	327.272	5.257	239.319	T

A COPY OF THE ORIGINAL SEALED AND SIGNED DRAWING IS ON FILE IN THE CENTRAL OFFICE.

SPECIFICATION REFERENCE

TRIPLE BOX CULVERTS

0 TO 2 FT. FILLS

VIRGINIA DEPARTMENT OF TRANSPORTATION

VDOT

ROAD AND BRIDGE STANDARDS

REVISION DATE 08/14

SHEET 2 OF 2

1004.06

BCT-05

FOR TYPICAL SECTION, NOTES AND OTHER DETAILS, REFER TO STANDARD BCT-DT.

DIMENSIONS						REINFORCING STEEL																										
SPAN	HGHT	T1	T2	T3	T4							BH1			BH2			BH3				BH4					BV1			BV2		
(FT.)	(FT.)	TOP SLAB	BOTTOM SLAB	EXTERIOR WALL (IN.)	INTERIOR WALL (IN.)	A	B	C	D	E	F	SIZE	SPACING C-C	LENGTH	SIZE	SPACING C-C	LENGTH	SIZE	SPACING C-C	a	LENGTH	SIZE	SPACING C-C	a	b	LENGTH	SIZE	SPACING C-C	LENGTH	SIZE	SPACING C-C	LENGTH
3	3	8"	8"	8"	8"	9	9'- 0"	9	9'- 0"	1	1'- 0"	4	12"	11'- 2"	4	12"	11'- 4"	--	---	-----	-----	4	12"	2'- 1¼"	2'- 8"	4'- 6"	4	12"	4'- 0"	4	12"	4'- 0"
3	4	8"	8"	8"	8"	9	9'- 0"	9	9'- 0"	2	2'- 0"	4	12"	11'- 2"	4	12"	11'- 4"	--	---	-----	-----	4	12"	2'- 1¼"	3'- 2"	5'- 0"	4	12"	5'- 0"	4	12"	5'- 0"
4	3	8"	8"	8"	8"	12	12'- 0"	12	12'- 0"	1	1'- 0"	4	12"	13'- 9"	4	12"	14'- 4"	--	---	-----	-----	4	12"	2'- 3⅝"	2'- 8"	4'- 8"	4	12"	4'- 0"	4	12"	4'- 0"
4	4	8"	8"	8"	8"	12	12'- 0"	12	12'- 0"	2	2'- 0"	4	12"	13'- 9"	4	12"	14'- 4"	--	---	-----	-----	4	12"	2'- 3⅝"	3'- 2"	5'- 2"	4	12"	5'- 0"	4	12"	5'- 0"
4	5	8"	8"	8"	8"	12	12'- 0"	12	12'- 0"	3	3'- 0"	4	12"	13'- 9"	4	12"	14'- 4"	--	---	-----	-----	4	12"	2'- 3⅝"	3'- 8"	5'- 8"	4	12"	6'- 0"	4	12"	6'- 0"
4	6	8"	8"	8"	8"	12	12'- 0"	12	12'- 0"	4	4'- 0"	4	12"	13'- 9"	4	12"	14'- 4"	--	---	-----	-----	4	12"	2'- 3⅝"	4'- 2"	6'- 2"	4	12"	7'- 0"	4	12"	7'- 0"
5	3	8"	8"	8"	8"	15	15'- 0"	15	15'- 0"	1	1'- 0"	4	12"	16'- 4"	4	12"	17'- 4"	4	12"	2'- 6"	4'- 9"	4	12"	2'- 6"	2'- 8"	4'-11"	4	12"	4'- 0"	4	12"	4'- 0"
5	4	8"	8"	8"	8"	15	15'- 0"	15	15'- 0"	2	2'- 0"	4	12"	16'- 4"	4	12"	17'- 4"	4	12"	2'- 6"	4'- 9"	4	12"	2'- 6"	3'- 2"	5'- 5"	4	12"	5'- 0"	4	12"	5'- 0"
5	5	8"	8"	8"	8"	15	15'- 0"	15	15'- 0"	3	3'- 0"	4	12"	16'- 4"	4	12"	17'- 4"	4	12"	2'- 6"	4'- 9"	4	12"	2'- 6"	3'- 8"	5'-11"	4	12"	6'- 0"	4	12"	6'- 0"
5	6	8"	8"	8"	8"	15	15'- 0"	15	15'- 0"	4	4'- 0"	4	12"	16'- 4"	4	12"	17'- 4"	4	12"	2'- 9"	5'- 5"	4	12"	2'- 6"	4'- 2"	6'- 5"	4	12"	7'- 0"	4	12"	7'- 0"
5	7	8"	8"	8"	8"	15	15'- 0"	15	15'- 0"	5	5'- 0"	4	12"	16'- 4"	4	12"	17'- 4"	4	12"	2'-11"	5'- 8"	4	12"	2'- 6"	4'- 8"	6'-11"	4	12"	8'- 0"	4	12"	8'- 0"
6	4	8"	8"	8"	8"	18	18'- 0"	18	18'- 0"	2	2'- 0"	4	12"	19'- 3"	4	12"	20'- 4"	--	---	-----	-----	5	12"	2'- 8⅜"	3'- 2"	5'- 6"	4	12"	5'- 0"	4	11"	5'- 0"
6	5	8"	8"	8"	8"	18	18'- 0"	18	18'- 0"	3	3'- 0"	4	12"	19'- 3"	4	12"	20'- 4"	--	---	-----	-----	5	12"	2'- 8⅜"	3'- 8"	6'- 0"	4	12"	6'- 0"	4	11"	6'- 0"
6	6	8"	8"	8"	8"	18	18'- 0"	18	18'- 0"	4	4'- 0"	4	12"	19'- 3"	4	12"	20'- 4"	--	---	-----	-----	5	12"	2'- 8⅜"	4'- 2"	6'- 6"	4	12"	7'- 0"	4	11"	7'- 0"
6	7	8"	8"	8"	8"	18	18'- 0"	18	18'- 0"	5	5'- 0"	4	12"	19'- 3"	4	12"	20'- 4"	--	---	-----	-----	5	12"	2'- 8⅜"	4'- 8"	7'- 0"	4	12"	8'- 0"	4	11"	8'- 0"
6	8	8"	8"	8"	8"	18	18'- 0"	18	18'- 0"	6	6'- 0"	4	11"	19'- 3"	4	11"	20'- 4"	4	11"	3'- 2"	6'- 2"	4	11"	2'- 8⅜"	5'- 2"	7'- 7"	4	12"	9'- 0"	4	11½"	9'- 0"
7	4	8"	8"	8"	8"	21	21'- 0"	21	21'- 0"	2	2'- 0"	4	9"	22'- 3"	4	9"	23'- 4"	4	9"	2'-10¾"	5'- 6"	4	9"	2'-10¾"	3'- 2"	5'-10"	4	12"	5'- 0"	4	10"	5'- 0"
7	6	8"	8"	8"	8"	21	21'- 0"	21	21'- 0"	4	4'- 0"	4	9"	22'- 3"	4	9"	23'- 4"	4	9"	2'-10¾"	5'- 6"	4	9"	2'-10¾"	4'- 2"	6'-10"	4	12"	7'- 0"	4	10"	7'- 0"
7	8	8"	8"	8"	8"	21	21'- 0"	21	21'- 0"	6	6'- 0"	4	9"	22'- 3"	4	9"	23'- 4"	4	9"	3'- 2"	6'- 2"	4	9"	2'-10¾"	5'- 2"	7'-10"	4	12"	9'- 0"	4	10"	9'- 0"
7	10	8"	8"	8"	8"	21	21'- 0"	21	21'- 0"	8	8'- 0"	4	9"	22'- 3"	5	9"	23'- 4"	4	9"	3'- 6"	6'- 9"	4	9"	2'-10¾"	6'- 2"	8'-10"	5	12"	11'- 0"	4	10"	11'- 0"
8	4	8"	8"	8"	8"	24	24'- 0"	24	24'- 0"	2	2'- 0"	5	11"	25'- 0"	5	11"	26'- 4"	--	---	-----	-----	6	11"	3'- 7"	3'- 6"	6'- 8"	4	12"	5'- 0"	4	7½"	5'- 0"
8	6	8"	8"	8"	8"	24	24'- 0"	24	24'- 0"	4	4'- 0"	5	11"	25'- 0"	5	11"	26'- 4"	4	11"	3'- 1¼"	5'-11"	5	11"	3'- 1¼"	4'- 2"	6'-11"	4	12"	7'- 0"	4	7½"	7'- 0"
8	8	8"	8"	8"	8"	24	24'- 0"	24	24'- 0"	6	6'- 0"	5	11"	25'- 0"	5	11"	26'- 4"	4	11"	3'- 1¼"	5'-11"	5	11"	3'- 1¼"	5'- 2"	7'-11"	4	12"	9'- 0"	4	7½"	9'- 0"
8	10	8"	8"	8"	8"	24	24'- 0"	24	24'- 0"	8	8'- 0"	5	11"	25'- 0"	5	11"	26'- 4"	4	11"	3'- 6"	6'- 9"	6	11"	3'- 7"	6'- 6"	9'- 8"	4	9"	11'- 0"	4	8"	11'- 0"
9	4	9¼"	9¼"	8"	8"	27	27'- 0"	27	27'- 0"	2	2'- 0"	5	11"	28'- 0"	5	11"	29'- 4"	4	11"	3'- 3⅝"	6'- 4"	6	11"	3'-10"	3'- 7"	7'- 0"	4	12"	5'- 2"	4	7½"	5'- 2"
9	6	9½"	9½"	8"	8"	27	27'- 0"	27	27'- 0"	4	4'- 0"	5	10"	28'- 0"	5	10"	29'- 4"	4	10"	3'- 3⅝"	6'- 4"	5	10"	3'- 3⅝"	4'- 3½"	7'- 3"	4	12"	7'- 3"	4	7½"	7'- 3"
9	8	9½"	9½"	8"	8"	27	27'- 0"	27	27'- 0"	6	6'- 0"	5	10"	28'- 0"	5	10"	29'- 4"	5	10"	3'- 3⅝"	6'- 3"	5	10"	3'- 3⅝"	5'- 3½"	8'- 3"	4	12"	9'- 3"	4	7"	9'- 3"
9	10	9½"	9½"	8"	8"	27	27'- 0"	27	27'- 0"	8	8'- 0"	5	9"	28'- 0"	5	9"	29'- 4"	5	9"	3'- 8"	6'-11"	5	9"	3'- 3⅝"	6'- 3½"	9'- 3"	5	12"	11'- 3"	4	7"	11'- 3"
9	12	9¾"	9¾"	8"	8"	27	27'- 0"	27	27'- 0"	10	10'- 0"	5	9"	28'- 0"	5	9"	29'- 4"	5	9"	4'- 1"	7'-11"	5	9"	3'- 3⅝"	7'- 3¾"	10'- 3"	5	8"	13'- 3"	4	7½"	13'- 3"
10	4	9½"	9½"	8"	8"	30	30'- 0"	30	30'- 0"	2	2'- 0"	5	9"	31'- 0"	5	9"	32'- 4"	--	---	-----	-----	5	9"	3'- 6"	3'- 3½"	6'- 6"	4	12"	5'- 3"	5	10½"	5'- 3"
10	6	9½"	9½"	8"	8"	30	30'- 0"	30	30'- 0"	4	4'- 0"	5	10"	31'- 0"	5	10"	32'- 4"	4	10"	3'- 6"	6'- 9"	5	10"	3'- 6"	4'- 3½"	7'- 6"	4	12"	7'- 3"	4	6½"	7'- 3"
10	8	9½"	9½"	8"	8"	30	30'- 0"	30	30'- 0"	6	6'- 0"	5	9"	31'- 0"	5	9"	32'- 4"	4	9"	3'- 6"	6'- 9"	5	9"	3'- 6"	5'- 3½"	8'- 6"	4	12"	9'- 3"	4	7"	9'- 3"
10	10	9¾"	9¾"	8"	8"	30	30'- 0"	30	30'- 0"	8	8'- 0"	5	9"	31'- 0"	5	9"	32'- 4"	4	9"	3'- 8"	6'-11"	5	9"	3'- 6"	6'- 3¾"	9'- 6"	4	9"	11'- 3"	4	7½"	11'- 3"
10	12	9¾"	9¾"	8"	8"	30	30'- 0"	30	30'- 0"	10	10'- 0"	6	12"	31'- 0"	6	12"	32'- 4"	4	12"	4'- 1"	7'-11"	6	12"	4'- 0"	7'- 8"	11'- 3"	5	8"	13'- 3"	4	8"	13'- 3"
12	6	10"	10"	8"	8"	36	36'- 0"	36	36'- 0"	4	4'- 0"	5	9"	37'- 0"	5	9"	38'- 4"	--	---	-----	-----	6	9"	4'- 5"	4'- 8"	8'- 8"	4	12"	7'- 4"	5	9"	7'- 4"
12	8	10"	10"	8"	8"	36	36'- 0"	36	36'- 0"	6	6'- 0"	6	12"	37'- 0"	6	12"	38'- 4"	--	---	-----	-----	7	12"	4'-10"	5'-11"	10'- 3"	4	12"	9'- 4"	4	6"	9'- 4"
12	10	10"	10"	8"	8"	36	36'- 0"	36	36'- 0"	8	8'- 0"	5	8"	37'- 0"	5	8"	38'- 4"	4	8"	3'-10¾"	7'- 6"	5	8"	3'-10¾"	6'- 4"	9'-11"	4	10"	11'- 4"	5	9½"	11'- 4"
12	12	10¼"	10¼"	8"	8"	36	36'- 0"	36	36'- 0"	10	10'- 0"	6	11"	37'- 0"	6	11"	38'- 4"	4	11"	4'- 1"	7'-11"	6	11"	4'- 5"	7'- 8"	11'- 8"	5	8"	13'- 5"	4	6½"	13'- 5"

A COPY OF THE ORIGINAL SEALED AND SIGNED DRAWING IS ON FILE IN THE CENTRAL OFFICE.

VDOT
ROAD AND BRIDGE STANDARDS

SHEET 1 OF 2 | REVISION DATE
1004.07 | 07/11

TRIPLE BOX CULVERTS

2 TO 5 FT. FILLS

VIRGINIA DEPARTMENT OF TRANSPORTATION

SPECIFICATION REFERENCE

BCT-05

FOR TYPICAL SECTION, NOTES AND OTHER DETAILS, REFER TO STANDARD BCT-DT.

SPAN (FT.)	HGHT (FT.)	REINFORCING STEEL BT1 SIZE	SPACING c-c	a	b	c	d	e	f	g	LENGTH	NO. BL1 #4 BARS	NO. BL2 #3 BARS	REINFORCING STEEL (LBS/LONG. JT)	QUAN./LF CONCRETE CLASS A4 (CY/LF)	REINFORCING STEEL (LBS/LF)	HEADWALLS G HEADWALL LENGTH	HW1 SIZE	HW1 LENGTH	NO. HW2 BARS	NO. HW3 BARS	INLET CONCRETE CL. A4 (CY)	INLET REINFORCING STEEL (LBS)	OUTLET CONCRETE CL. A4 (CY)	OUTLET REINFORCING STEEL (LBS)	WINGWALL
3	3	4	12"	2'- 8⅞"	0'- 4½"	1'- 6⅝"	0'- 5⅞"	0'- 3¾"	11'- 3⅞"	1'- 5⅞"	11'-10"	44	16	42.388	0.989	109.333	13'- 2"	6	12'-10"	2	8	1.827	102.932	1.808	77.103	A
3	4	4	12"	2'- 8⅞"	0'- 4½"	1'- 6⅝"	0'- 5⅞"	0'- 3¾"	11'- 3⅞"	1'- 5⅞"	11'-10"	44	24	45.212	1.087	117.685	13'- 2"	6	12'-10"	2	10	1.932	109.835	1.901	77.103	C
4	3	4	12"	3'- 6½"	0'- 4½"	1'-11½"	0'- 5⅞"	0'- 3¾"	14'- 4"	2'- 1"	14'-10"	56	16	52.408	1.136	129.262	16'- 2"	6	15'-10"	2	8	2.131	120.956	2.121	95.127	A
4	4	4	12"	3'- 6½"	0'- 4½"	1'-11½"	0'- 5⅞"	0'- 3¾"	14'- 4"	2'- 1"	14'-10"	56	24	55.232	1.234	137.614	16'- 2"	6	15'-10"	2	10	2.236	127.859	2.214	95.127	C
4	5	4	12"	3'- 6½"	0'- 4½"	1'-11½"	0'- 5⅞"	0'- 3¾"	14'- 4"	2'- 1"	14'-10"	56	32	58.056	1.332	145.966	16'- 2"	6	15'-10"	2	12	2.341	134.761	2.307	95.127	E
4	6	4	12"	3'- 6½"	0'- 4½"	1'-11½"	0'- 5⅞"	0'- 3¾"	14'- 4"	2'- 1"	14'-10"	56	40	60.880	1.430	154.318	16'- 2"	6	15'-10"	2	14	2.446	141.664	2.399	95.127	G
5	3	4	12"	4'- 4⅛"	0'- 4½"	2'- 4¼"	0'- 5⅞"	0'- 3¾"	17'- 4"	2'- 8¼"	17'-10"	68	16	62.428	1.281	162.105	19'- 2"	6	18'-10"	2	8	2.434	138.980	2.435	113.151	A
5	4	4	12"	4'- 4⅛"	0'- 4½"	2'- 4¼"	0'- 5⅞"	0'- 3¾"	17'- 4"	2'- 8¼"	17'-10"	68	24	65.252	1.380	170.457	19'- 2"	6	18'-10"	2	10	2.539	145.883	2.527	113.151	C
5	5	4	12"	4'- 4⅛"	0'- 4½"	2'- 4¼"	0'- 5⅞"	0'- 3¾"	17'- 4"	2'- 8¼"	17'-10"	68	32	68.076	1.478	178.809	19'- 2"	6	18'-10"	2	12	2.644	152.785	2.620	113.151	E
5	6	4	12"	4'- 4⅛"	0'- 4½"	2'- 4¼"	0'- 5⅞"	0'- 3¾"	17'- 4"	2'- 8¼"	17'-10"	68	40	70.900	1.575	194.389	19'- 2"	6	18'-10"	2	14	2.750	159.688	2.713	113.151	G
5	7	4	12"	4'- 4⅛"	0'- 4½"	2'- 4¼"	0'- 5⅞"	0'- 3¾"	17'- 4"	2'- 8¼"	17'-10"	68	48	73.724	1.673	203.673	19'- 2"	6	18'-10"	2	16	2.855	166.591	2.806	113.151	I
6	4	4	12"	5'- 1¾"	0'- 4½"	2'- 9"	0'- 5⅞"	0'- 3¾"	20'- 4"	3'- 3½"	20'-10"	80	24	75.272	1.526	191.451	22'- 2"	6	21'-10"	2	10	2.843	163.907	2.841	131.175	C
6	5	4	12"	5'- 1¾"	0'- 4½"	2'- 9"	0'- 5⅞"	0'- 3¾"	20'- 4"	3'- 3½"	20'-10"	80	32	78.096	1.624	202.435	22'- 2"	6	21'-10"	2	12	2.948	170.809	2.934	131.175	E
6	6	4	12"	5'- 1¾"	0'- 4½"	2'- 9"	0'- 5⅞"	0'- 3¾"	20'- 4"	3'- 3½"	20'-10"	80	40	80.920	1.722	212.059	22'- 2"	6	21'-10"	2	14	3.053	177.712	3.026	131.175	G
6	7	4	12"	5'- 1¾"	0'- 4½"	2'- 9"	0'- 5⅞"	0'- 3¾"	20'- 4"	3'- 3½"	20'-10"	80	48	83.744	1.820	221.683	22'- 2"	6	21'-10"	2	16	3.158	184.615	3.119	131.175	I
6	8	4	11"	5'- 1¾"	0'- 4½"	2'- 9"	0'- 5⅞"	0'- 3¾"	20'- 4"	3'- 3½"	20'-10"	80	56	86.568	1.917	247.827	22'- 2"	6	21'-10"	2	18	3.263	191.517	3.212	131.175	K
7	4	4	9"	5'-11⅜"	0'- 4½"	3'- 1⅞"	0'- 5⅞"	0'- 3¾"	23'- 4⅛"	3'-10⅝"	23'-10"	92	24	85.292	1.669	266.347	25'- 2"	6	24'-10"	2	10	3.146	181.931	3.154	149.199	C
7	6	4	9"	5'-11⅜"	0'- 4½"	3'- 1⅞"	0'- 5⅞"	0'- 3¾"	23'- 4⅛"	3'-10⅝"	23'-10"	92	40	90.940	1.865	285.595	25'- 2"	6	24'-10"	2	14	3.357	195.736	3.340	149.199	G
7	8	4	9"	5'-11⅜"	0'- 4½"	3'- 1⅞"	0'- 5⅞"	0'- 3¾"	23'- 4⅛"	3'-10⅝"	23'-10"	92	56	96.588	2.061	307.293	25'- 2"	6	24'-10"	2	18	3.567	209.541	3.525	149.199	K
7	10	4	9"	5'-11⅜"	0'- 4½"	3'- 1⅞"	0'- 5⅞"	0'- 3¾"	23'- 4⅛"	3'-10⅝"	23'-10"	92	72	102.236	2.254	359.149	25'- 2"	6	24'-10"	2	22	3.777	223.347	3.711	149.199	O
8	4	5	11"	6'- 8⅞"	0'- 4⅝"	3'- 6⅝"	0'- 6"	0'- 3¾"	26'- 3⅞"	4'- 5⅞"	26'-10"	104	24	95.312	1.812	335.428	28'- 2"	6	27'-10"	2	10	3.450	199.955	3.468	167.223	C
8	6	5	11"	6'- 8⅞"	0'- 4⅝"	3'- 6⅝"	0'- 6"	0'- 3¾"	26'- 3⅞"	4'- 5⅞"	26'-10"	104	40	100.960	2.007	359.349	28'- 2"	6	27'-10"	2	14	3.660	213.760	3.653	167.223	G
8	8	5	11"	6'- 8⅞"	0'- 4⅝"	3'- 6⅝"	0'- 6"	0'- 3¾"	26'- 3⅞"	4'- 5⅞"	26'-10"	104	56	106.608	2.203	381.727	28'- 2"	6	27'-10"	2	18	3.870	227.565	3.839	167.223	K
8	10	5	11"	6'- 8⅞"	0'- 4⅝"	3'- 6⅝"	0'- 6"	0'- 3¾"	26'- 3⅞"	4'- 5⅞"	26'-10"	104	72	112.256	2.397	430.737	28'- 2"	6	27'-10"	2	22	4.081	241.371	4.024	167.223	O
9	4	5	11"	7'- 5⅞"	0'- 5⅞"	3'-10¼"	0'- 7¾"	0'- 5"	29'- 4"	4'-11¾"	30'- 0"	116	24	105.332	2.185	387.151	31'- 2"	6	30'-10"	2	10	3.682	217.979	3.710	185.247	D
9	6	5	10"	7'- 5¾"	0'- 6⅛"	3'-10"	0'- 8⅛"	0'- 5¼"	29'- 4"	4'-11½"	30'- 1"	116	40	110.980	2.426	415.921	31'- 2"	6	30'-10"	2	14	3.874	231.784	3.877	185.247	H
9	8	5	10"	7'- 5¾"	0'- 6⅛"	3'-10"	0'- 8⅛"	0'- 5¼"	29'- 4"	4'-11½"	30'- 1"	116	56	116.628	2.621	452.011	31'- 2"	6	30'-10"	2	18	4.084	245.589	4.063	185.247	L
9	10	5	9"	7'- 5¾"	0'- 6⅛"	3'-10"	0'- 8⅛"	0'- 5¼"	29'- 4"	4'-11½"	30'- 1"	116	72	122.276	2.813	519.719	31'- 2"	6	30'-10"	2	22	4.295	259.395	4.248	185.247	P
9	12	5	9"	7'- 5⅝"	0'- 6⅜"	3'- 9¾"	0'- 8⅜"	0'- 5½"	29'- 4"	4'-11¼"	30'- 1"	116	88	127.924	3.053	561.492	31'- 2"	6	30'-10"	2	26	4.487	273.200	4.416	185.247	T
10	4	5	9"	8'- 3⅜"	0'- 6⅛"	4'- 2¾"	0'- 8⅛"	0'- 5¼"	32'- 4"	5'- 6¾"	33'- 1"	128	24	115.352	2.403	436.712	34'- 2"	6	33'-10"	2	10	3.953	236.003	3.991	203.271	D
10	6	5	10"	8'- 3⅜"	0'- 6⅛"	4'- 2¾"	0'- 8⅛"	0'- 5¼"	32'- 4"	5'- 6¾"	33'- 1"	128	40	121.000	2.599	454.319	34'- 2"	6	33'-10"	2	14	4.164	249.808	4.177	203.271	H
10	8	5	9"	8'- 3⅜"	0'- 6⅛"	4'- 2¾"	0'- 8⅛"	0'- 5¼"	32'- 4"	5'- 6¾"	33'- 1"	128	56	126.648	2.792	508.554	34'- 2"	6	33'-10"	2	18	4.374	263.613	4.362	203.271	L
10	10	5	9"	8'- 3¼"	0'- 6⅜"	4'- 2½"	0'- 8⅜"	0'- 5½"	32'- 4"	5'- 6½"	33'- 1"	128	72	132.296	3.038	535.338	34'- 2"	6	33'-10"	2	22	4.564	277.419	4.527	203.271	P
10	12	6	12"	8'- 3¼"	0'- 6½"	4'- 2½"	0'- 8½"	0'- 5½"	32'- 4"	5'- 6½"	33'- 1"	128	88	137.944	3.229	624.508	34'- 2"	6	33'-10"	2	26	4.774	291.224	4.713	203.271	T
12	6	5	9"	9'-10⅜"	0'- 6⅝"	4'-11⅞"	0'- 8¾"	0'- 5¾"	38'- 4⅛"	6'- 8⅝"	39'- 1"	152	40	141.040	3.062	562.160	40'- 2"	6	39'-10"	2	14	4.693	285.856	4.726	239.319	H
12	8	6	12"	9'-10⅜"	0'- 6¾"	4'-11⅞"	0'- 8⅞"	0'- 5¾"	38'- 4⅛"	6'- 8⅝"	39'- 1"	152	56	146.688	3.255	618.563	40'- 2"	6	39'-10"	2	18	4.903	299.661	4.912	239.319	L
12	10	5	8"	9'-10⅜"	0'- 6⅝"	4'-11⅞"	0'- 8¾"	0'- 5¾"	38'- 4⅛"	6'- 8⅝"	39'- 1"	152	72	152.336	3.449	673.750	40'- 2"	6	39'-10"	2	22	5.114	313.467	5.097	239.319	P
12	12	6	11"	9'-10¼"	0'- 7"	4'-11⅝"	0'- 9¼"	0'- 6"	38'- 4⅛"	6'- 8⅜"	39'- 2"	152	88	157.984	3.702	725.364	40'- 2"	6	39'-10"	2	26	5.299	327.272	5.257	239.319	T

A COPY OF THE ORIGINAL SEALED AND SIGNED DRAWING IS ON FILE IN THE CENTRAL OFFICE.

SPECIFICATION REFERENCE

TRIPLE BOX CULVERTS

2 TO 5 FT. FILLS

VIRGINIA DEPARTMENT OF TRANSPORTATION

VDOT

ROAD AND BRIDGE STANDARDS

REVISION DATE 08/14

SHEET 2 OF 2

1004.08

BCT-10

FOR TYPICAL SECTION, NOTES AND OTHER DETAILS, REFER TO STANDARD BCT-DT.

DIMENSIONS						REINFORCING STEEL																										
SPAN	HGHT	T1	T2	T3	T4							BH1			BH2			BH3				BH4					BV1			BV2		
(FT.)	(FT.)	TOP SLAB	BOTTOM SLAB	EXTERIOR WALL (IN.)	INTERIOR WALL (IN.)	A	B	C	D	E	F	SIZE	SPACING C-C	LENGTH	SIZE	SPACING C-C	LENGTH	SIZE	SPACING C-C	a	LENGTH	SIZE	SPACING C-C	a	b	LENGTH	SIZE	SPACING C-C	LENGTH	SIZE	SPACING C-C	LENGTH
3	3	8"	8"	8"	8"	9	9'- 0"	9	9'- 0"	1	1'- 0"	4	12"	11'- 2"	4	12"	11'- 4"	--	---	-----	-----	4	12"	2'- 1¼"	2'- 8"	4'- 6"	4	12"	4'- 0"	4	12"	4'- 0"
3	4	8"	8"	8"	8"	9	9'- 0"	9	9'- 0"	2	2'- 0"	4	12"	11'- 2"	4	12"	11'- 4"	--	---	-----	-----	4	12"	2'- 1¼"	3'- 2"	5'- 0"	4	12"	5'- 0"	4	12"	5'- 0"
4	3	8"	8"	8"	8"	12	12'- 0"	12	12'- 0"	1	1'- 0"	4	12"	13'- 9"	4	12"	14'- 4"	--	---	-----	-----	4	12"	2'- 3⅝"	2'- 8"	4'- 8"	4	12"	4'- 0"	4	12"	4'- 0"
4	4	8"	8"	8"	8"	12	12'- 0"	12	12'- 0"	2	2'- 0"	4	12"	13'- 9"	4	12"	14'- 4"	--	---	-----	-----	4	12"	2'- 3⅝"	3'- 2"	5'- 2"	4	12"	5'- 0"	4	12"	5'- 0"
4	5	8"	8"	8"	8"	12	12'- 0"	12	12'- 0"	3	3'- 0"	4	12"	13'- 9"	4	12"	14'- 4"	--	---	-----	-----	4	12"	2'- 3⅝"	3'- 8"	5'- 8"	4	12"	6'- 0"	4	12"	6'- 0"
4	6	8"	8"	8"	8"	12	12'- 0"	12	12'- 0"	4	4'- 0"	4	12"	13'- 9"	4	12"	14'- 4"	--	---	-----	-----	4	12"	2'- 3⅝"	4'- 2"	6'- 2"	4	12"	7'- 0"	4	12"	7'- 0"
5	3	8"	8"	8"	8"	15	15'- 0"	15	15'- 0"	1	1'- 0"	4	12"	16'- 4"	4	12"	17'- 4"	--	---	-----	-----	4	12"	2'- 6"	2'- 8"	4'-11"	4	12"	4'- 0"	4	12"	4'- 0"
5	4	8"	8"	8"	8"	15	15'- 0"	15	15'- 0"	2	2'- 0"	4	12"	16'- 4"	4	12"	17'- 4"	--	---	-----	-----	4	12"	2'- 6"	3'- 2"	5'- 5"	4	12"	5'- 0"	4	12"	5'- 0"
5	5	8"	8"	8"	8"	15	15'- 0"	15	15'- 0"	3	3'- 0"	4	12"	16'- 4"	4	12"	17'- 4"	--	---	-----	-----	4	12"	2'- 6"	3'- 8"	5'-11"	4	12"	6'- 0"	4	12"	6'- 0"
5	6	8"	8"	8"	8"	15	15'- 0"	15	15'- 0"	4	4'- 0"	4	12"	16'- 4"	4	12"	17'- 4"	--	---	-----	-----	4	12"	2'- 6"	4'- 2"	6'- 5"	4	12"	7'- 0"	4	12"	7'- 0"
5	7	8"	8"	8"	8"	15	15'- 0"	15	15'- 0"	5	5'- 0"	4	12"	16'- 4"	4	12"	17'- 4"	--	---	-----	-----	4	12"	2'- 6"	4'- 8"	6'-11"	4	12"	8'- 0"	4	12"	8'- 0"
6	4	8"	8"	8"	8"	18	18'- 0"	18	18'- 0"	2	2'- 0"	4	12"	19'- 3"	4	12"	20'- 4"	3	12"	2'- 8⅜"	5'- 2"	4	12"	2'- 8⅜"	3'- 2"	5'- 7"	4	12"	5'- 0"	4	12"	5'- 0"
6	5	8"	8"	8"	8"	18	18'- 0"	18	18'- 0"	3	3'- 0"	4	12"	19'- 3"	4	12"	20'- 4"	--	---	-----	-----	4	12"	2'- 8⅜"	3'- 8"	6'- 1"	4	12"	6'- 0"	4	12"	6'- 0"
6	6	8"	8"	8"	8"	18	18'- 0"	18	18'- 0"	4	4'- 0"	4	12"	19'- 3"	4	12"	20'- 4"	--	---	-----	-----	4	12"	2'- 8⅜"	4'- 2"	6'- 7"	4	12"	7'- 0"	4	12"	7'- 0"
6	7	8"	8"	8"	8"	18	18'- 0"	18	18'- 0"	5	5'- 0"	4	12"	19'- 3"	4	12"	20'- 4"	--	---	-----	-----	4	12"	2'- 8⅜"	4'- 8"	7'- 1"	4	12"	8'- 0"	4	12"	8'- 0"
6	8	8"	8"	8"	8"	18	18'- 0"	18	18'- 0"	6	6'- 0"	4	12"	19'- 3"	4	12"	20'- 4"	3	12"	3'- 2"	6'- 2"	4	12"	2'- 8⅜"	5'- 2"	7'- 7"	4	12"	9'- 0"	4	12"	9'- 0"
7	4	8"	8"	8"	8"	21	21'- 0"	21	21'- 0"	2	2'- 0"	4	12"	22'- 3"	4	12"	23'- 4"	--	---	-----	-----	5	12"	2'-10¾"	3'- 2"	5'- 9"	4	11½"	5'- 0"	4	12"	5'- 0"
7	6	8"	8"	8"	8"	21	21'- 0"	21	21'- 0"	4	4'- 0"	4	12"	22'- 3"	4	12"	23'- 4"	4	12"	2'-10¾"	5'- 6"	4	12"	2'-10¾"	4'- 2"	6'-10"	4	12"	7'- 0"	4	12"	7'- 0"
7	8	8"	8"	8"	8"	21	21'- 0"	21	21'- 0"	6	6'- 0"	4	12"	22'- 3"	4	12"	23'- 4"	4	12"	3'- 2"	6'- 2"	4	12"	2'-10¾"	5'- 2"	7'-10"	4	12"	9'- 0"	4	12"	9'- 0"
7	10	8"	8"	8"	8"	21	21'- 0"	21	21'- 0"	8	8'- 0"	4	11"	22'- 3"	4	11"	23'- 4"	--	---	-----	-----	5	11"	2'-10¾"	6'- 2"	8'- 9"	5	10"	11'- 0"	4	12"	11'- 0"
8	4	8"	8"	8"	8"	24	24'- 0"	24	24'- 0"	2	2'- 0"	4	11"	25'- 0"	4	11"	26'- 4"	3	11"	3'- 1¼"	6'- 0"	5	11"	3'- 1¼"	3'- 2"	5'-11"	4	8"	5'- 0"	4	12"	5'- 0"
8	6	8¼"	8¼"	8"	8"	24	24'- 0"	24	24'- 0"	4	4'- 0"	4	10"	25'- 0"	4	10"	26'- 4"	--	---	-----	-----	5	10"	3'- 1¼"	4'- 2¼"	7'- 0"	4	12"	7'- 0"	4	12"	7'- 0"
8	8	8½"	8½"	8"	8"	24	24'- 0"	24	24'- 0"	6	6'- 0"	4	10"	25'- 0"	4	10"	26'- 4"	--	---	-----	-----	5	10"	3'- 1¼"	5'- 2½"	8'- 0"	4	12"	9'- 1"	4	12"	9'- 1"
8	10	8¾"	8¾"	8"	8"	24	24'- 0"	24	24'- 0"	8	8'- 0"	4	9"	25'- 0"	4	9"	26'- 4"	--	---	-----	-----	5	9"	3'- 1¼"	6'- 2¾"	9'- 0"	5	11"	11'- 2"	4	12"	11'- 2"
9	4	8¾"	8¾"	8"	8"	27	27'- 0"	27	27'- 0"	2	2'- 0"	4	9"	28'- 0"	4	9"	29'- 4"	3	9"	3'- 3⅝"	6'- 5"	5	9"	3'- 3⅝"	3'- 2¾"	6'- 2"	4	7½"	5'- 2"	4	12"	5'- 2"
9	6	9"	9"	8"	8"	27	27'- 0"	27	27'- 0"	4	4'- 0"	4	9"	28'- 0"	4	9"	29'- 4"	--	---	-----	-----	5	9"	3'- 3⅝"	4'- 3"	7'- 3"	4	12"	7'- 2"	4	12"	7'- 2"
9	8	9¼"	9¼"	8"	8"	27	27'- 0"	27	27'- 0"	6	6'- 0"	4	9"	28'- 0"	5	9"	29'- 4"	--	---	-----	-----	5	9"	3'- 3⅝"	5'- 3¼"	8'- 3"	4	12"	9'- 2"	4	12"	9'- 2"
9	10	9½"	9½"	8"	8"	27	27'- 0"	27	27'- 0"	8	8'- 0"	4	9"	28'- 0"	5	9"	29'- 4"	--	---	-----	-----	5	9"	3'- 3⅝"	6'- 3½"	9'- 3"	5	12"	11'- 3"	4	12"	11'- 3"
9	12	9½"	9½"	8"	8"	27	27'- 0"	27	27'- 0"	10	10'- 0"	4	8"	28'- 0"	4	8"	29'- 4"	3	8"	4'- 1"	7'-11"	5	8"	3'- 3⅝"	7'- 3½"	10'- 3"	5	7"	13'- 3"	4	12"	13'- 3"
10	4	9¾"	9¾"	8"	8"	30	30'- 0"	30	30'- 0"	2	2'- 0"	5	8"	31'- 3"	4	8"	32'- 4"	--	---	-----	-----	5	8"	3'- 6"	3'- 3¾"	6'- 6"	4	7"	5'- 3"	4	12"	5'- 3"
10	6	10"	10"	8"	8"	30	30'- 0"	30	30'- 0"	4	4'- 0"	5	9"	31'- 3"	5	9"	32'- 4"	--	---	-----	-----	5	9"	3'- 6"	4'- 4"	7'- 6"	4	11"	7'- 4"	4	12"	7'- 4"
10	8	10"	10"	8"	8"	30	30'- 0"	30	30'- 0"	6	6'- 0"	5	8"	31'- 3"	5	8"	32'- 4"	3	8"	3'- 6"	6'-10"	4	8"	3'- 6"	5'- 4"	8'- 7"	4	12"	9'- 4"	4	12"	9'- 4"
10	10	10¼"	10¼"	8"	8"	30	30'- 0"	30	30'- 0"	8	8'- 0"	5	8"	31'- 3"	5	8"	32'- 4"	4	8"	3'- 8"	6'-11"	4	8"	3'- 6"	6'- 4¼"	9'- 7"	5	12"	11'- 5"	4	12"	11'- 5"
10	12	10½"	10½"	8"	8"	30	30'- 0"	30	30'- 0"	10	10'- 0"	5	11"	31'- 3"	5	11"	32'- 4"	3	11"	4'- 2"	8'- 2"	6	11"	4'- 0"	7'- 8"	11'- 4"	5	7"	13'- 5"	4	12"	13'- 5"
12	6	11½"	11½"	8"	8"	36	36'- 0"	36	36'- 0"	4	4'- 0"	5	9"	37'- 0"	5	9"	38'- 4"	3	9"	3'-10¾"	7'- 7"	5	9"	3'-10¾"	4'- 5½"	8'- 0"	4	9"	7'- 7"	4	12"	7'- 7"
12	8	11¾"	11¾"	8"	8"	36	36'- 0"	36	36'- 0"	6	6'- 0"	5	9"	37'- 0"	5	9"	38'- 4"	3	9"	3'-10¾"	7'- 7"	5	9"	3'-10¾"	5'- 5¾"	9'- 1"	4	12"	9'- 8"	4	12"	9'- 8"
12	10	11¾"	11¾"	8"	8"	36	36'- 0"	36	36'- 0"	8	8'- 0"	6	9"	37'- 0"	5	9"	38'- 4"	3	9"	3'-10¾"	7'- 7"	5	9"	3'-10¾"	6'- 5¾"	10'- 1"	5	12"	11'- 8"	4	12"	11'- 8"
12	12	12"	12"	8"	8"	36	36'- 0"	36	36'- 0"	10	10'- 0"	6	9"	37'- 0"	5	9"	38'- 4"	--	---	-----	-----	6	9"	4'- 5"	7'-10"	11'-10"	6	11½"	13'- 8"	4	12"	13'- 8"

A COPY OF THE ORIGINAL SEALED AND SIGNED DRAWING IS ON FILE IN THE CENTRAL OFFICE.

VDOT
ROAD AND BRIDGE STANDARDS

SHEET 1 OF 2 | REVISION DATE
1004.09 | 07/11

TRIPLE BOX CULVERTS

5 TO 10 FT. FILLS

VIRGINIA DEPARTMENT OF TRANSPORTATION

SPECIFICATION REFERENCE

BCT-10

FOR TYPICAL SECTION, NOTES AND OTHER DETAILS, REFER TO STANDARD BCT-DT.

SPAN (FT.)	HGHT (FT.)	REINFORCING STEEL BT1 SIZE	SPACING c-c	a	b	c	d	e	f	g	LENGTH	NO. BL1 #4 BARS	NO. BL2 #3 BARS	REINFORCING STEEL (LBS/LONG. JT)	QUAN./LF CONCRETE CLASS A4 (CY/LF)	REINFORCING STEEL (LBS/LF)	HEADWALLS G HEADWALL LENGTH	HW1 SIZE	HW1 LENGTH	NO. HW2 BARS	NO. HW3 BARS	INLET CONCRETE CL. A4 (CY)	INLET REINFORCING STEEL (LBS)	OUTLET CONCRETE CL. A4 (CY)	OUTLET REINFORCING STEEL (LBS)	WINGWALL
3	3	4	12"	2'- 8 7/8"	0'- 4 1/2"	1'- 6 5/8"	0'- 5 7/8"	0'- 3 3/4"	11'- 3 7/8"	1'- 5 7/8"	11'-10"	44	16	42.388	0.989	109.333	13'- 2"	6	12'-10"	2	8	1.827	102.932	1.808	77.103	A
3	4	4	12"	2'- 8 7/8"	0'- 4 1/2"	1'- 6 5/8"	0'- 5 7/8"	0'- 3 3/4"	11'- 3 7/8"	1'- 5 7/8"	11'-10"	44	24	45.212	1.087	117.685	13'- 2"	6	12'-10"	2	10	1.932	109.835	1.901	77.103	C
4	3	4	12"	3'- 6 1/2"	0'- 4 1/2"	1'-11 1/2"	0'- 5 7/8"	0'- 3 3/4"	14'- 4"	2'- 1"	14'-10"	56	16	52.408	1.136	129.262	16'- 2"	6	15'-10"	2	8	2.131	120.956	2.121	95.127	A
4	4	4	12"	3'- 6 1/2"	0'- 4 1/2"	1'-11 1/2"	0'- 5 7/8"	0'- 3 3/4"	14'- 4"	2'- 1"	14'-10"	56	24	55.232	1.234	137.614	16'- 2"	6	15'-10"	2	10	2.236	127.859	2.214	95.127	C
4	5	4	12"	3'- 6 1/2"	0'- 4 1/2"	1'-11 1/2"	0'- 5 7/8"	0'- 3 3/4"	14'- 4"	2'- 1"	14'-10"	56	32	58.056	1.332	145.966	16'- 2"	6	15'-10"	2	12	2.341	134.761	2.307	95.127	E
4	6	4	12"	3'- 6 1/2"	0'- 4 1/2"	1'-11 1/2"	0'- 5 7/8"	0'- 3 3/4"	14'- 4"	2'- 1"	14'-10"	56	40	60.880	1.430	154.318	16'- 2"	6	15'-10"	2	14	2.446	141.664	2.399	95.127	G
5	3	4	12"	4'- 4 1/8"	0'- 4 1/2"	2'- 4 1/4"	0'- 5 7/8"	0'- 3 3/4"	17'- 4"	2'- 8 1/4"	17'-10"	68	16	62.428	1.282	149.413	19'- 2"	6	18'-10"	2	8	2.434	138.980	2.435	113.151	A
5	4	4	12"	4'- 4 1/8"	0'- 4 1/2"	2'- 4 1/4"	0'- 5 7/8"	0'- 3 3/4"	17'- 4"	2'- 8 1/4"	17'-10"	68	24	65.252	1.381	157.765	19'- 2"	6	18'-10"	2	10	2.539	145.883	2.527	113.151	C
5	5	4	12"	4'- 4 1/8"	0'- 4 1/2"	2'- 4 1/4"	0'- 5 7/8"	0'- 3 3/4"	17'- 4"	2'- 8 1/4"	17'-10"	68	32	68.076	1.479	166.117	19'- 2"	6	18'-10"	2	12	2.644	152.785	2.620	113.151	E
5	6	4	12"	4'- 4 1/8"	0'- 4 1/2"	2'- 4 1/4"	0'- 5 7/8"	0'- 3 3/4"	17'- 4"	2'- 8 1/4"	17'-10"	68	40	70.900	1.577	174.469	19'- 2"	6	18'-10"	2	14	2.750	159.688	2.713	113.151	G
5	7	4	12"	4'- 4 1/8"	0'- 4 1/2"	2'- 4 1/4"	0'- 5 7/8"	0'- 3 3/4"	17'- 4"	2'- 8 1/4"	17'-10"	68	48	73.724	1.675	182.821	19'- 2"	6	18'-10"	2	16	2.855	166.591	2.806	113.151	I
6	4	4	12"	5'- 1 3/4"	0'- 4 1/2"	2'- 9"	0'- 5 7/8"	0'- 3 3/4"	20'- 4"	3'- 3 1/2"	20'-10"	80	24	75.272	1.526	191.180	22'- 2"	6	21'-10"	2	10	2.843	163.907	2.841	131.175	C
6	5	4	12"	5'- 1 3/4"	0'- 4 1/2"	2'- 9"	0'- 5 7/8"	0'- 3 3/4"	20'- 4"	3'- 3 1/2"	20'-10"	80	32	78.096	1.625	192.048	22'- 2"	6	21'-10"	2	12	2.948	170.809	2.934	131.175	E
6	6	4	12"	5'- 1 3/4"	0'- 4 1/2"	2'- 9"	0'- 5 7/8"	0'- 3 3/4"	20'- 4"	3'- 3 1/2"	20'-10"	80	40	80.920	1.723	200.651	22'- 2"	6	21'-10"	2	14	3.053	177.712	3.026	131.175	G
6	7	4	12"	5'- 1 3/4"	0'- 4 1/2"	2'- 9"	0'- 5 7/8"	0'- 3 3/4"	20'- 4"	3'- 3 1/2"	20'-10"	80	48	83.744	1.821	209.118	22'- 2"	6	21'-10"	2	16	3.158	184.615	3.119	131.175	I
6	8	4	12"	5'- 1 3/4"	0'- 4 1/2"	2'- 9"	0'- 5 7/8"	0'- 3 3/4"	20'- 4"	3'- 3 1/2"	20'-10"	80	56	86.568	1.919	227.090	22'- 2"	6	21'-10"	2	18	3.263	191.517	3.212	131.175	K
7	4	4	12"	5'-11 3/8"	0'- 4 1/2"	3'- 1 7/8"	0'- 5 7/8"	0'- 3 3/4"	23'- 4 1/8"	3'-10 5/8"	23'-10"	92	24	85.292	1.673	213.514	25'- 2"	6	24'-10"	2	10	3.146	181.931	3.154	149.199	C
7	6	4	12"	5'-11 3/8"	0'- 4 1/2"	3'- 1 7/8"	0'- 5 7/8"	0'- 3 3/4"	23'- 4 1/8"	3'-10 5/8"	23'-10"	92	40	90.940	1.868	236.972	25'- 2"	6	24'-10"	2	14	3.357	195.736	3.340	149.199	G
7	8	4	12"	5'-11 3/8"	0'- 4 1/2"	3'- 1 7/8"	0'- 5 7/8"	0'- 3 3/4"	23'- 4 1/8"	3'-10 5/8"	23'-10"	92	56	96.588	2.065	255.994	25'- 2"	6	24'-10"	2	18	3.567	209.541	3.525	149.199	K
7	10	4	11"	5'-11 3/8"	0'- 4 1/2"	3'- 1 7/8"	0'- 5 7/8"	0'- 3 3/4"	23'- 4 1/8"	3'-10 5/8"	23'-10"	92	72	102.236	2.259	295.024	25'- 2"	6	24'-10"	2	22	3.777	223.347	3.711	149.199	O
8	4	4	11"	6'- 8 7/8"	0'- 4 1/2"	3'- 6 5/8"	0'- 5 7/8"	0'- 3 3/4"	26'- 3 7/8"	4'- 5 7/8"	26'-10"	104	24	95.312	1.817	260.455	28'- 2"	6	27'-10"	2	10	3.450	199.955	3.468	167.223	C
8	6	4	10"	6'- 8 3/4"	0'- 4 3/4"	3'- 6 3/8"	0'- 6 1/4"	0'- 4"	26'- 3 7/8"	4'- 5 5/8"	26'-11"	104	40	100.960	2.054	280.389	28'- 2"	6	27'-10"	2	14	3.644	213.760	3.638	167.223	G
8	8	4	10"	6'- 8 5/8"	0'- 5"	3'- 6 1/8"	0'- 6 1/2"	0'- 4 1/4"	26'- 3 7/8"	4'- 5 3/8"	26'-11"	104	56	106.608	2.292	300.249	28'- 2"	6	27'-10"	2	18	3.839	227.565	3.807	167.223	K
8	10	4	9"	6'- 8 1/2"	0'- 5 1/4"	3'- 5 7/8"	0'- 6 7/8"	0'- 4 1/2"	26'- 3 7/8"	4'- 5 1/8"	26'-11"	104	72	112.256	2.526	351.619	28'- 2"	6	27'-10"	2	22	4.033	241.371	3.977	167.223	O
9	4	4	9"	7'- 6 1/8"	0'- 5 1/4"	3'-10 3/4"	0'- 6 7/8"	0'- 4 1/2"	29'- 4"	5'- 1/4"	29'-11"	116	24	105.332	2.098	323.991	31'- 2"	6	30'-10"	2	10	3.699	217.979	3.727	185.247	C
9	6	4	9"	7'- 6"	0'- 5 1/2"	3'-10 1/2"	0'- 7 1/4"	0'- 4 3/4"	29'- 4"	5'- 0"	30'- 0"	116	40	110.980	2.341	327.354	31'- 2"	6	30'-10"	2	14	3.892	231.784	3.895	185.247	G
9	8	4	9"	7'- 5 7/8"	0'- 5 3/4"	3'-10 1/4"	0'- 7 5/8"	0'- 5"	29'- 4"	4'-11 3/4"	30'- 0"	116	56	116.628	2.581	375.366	31'- 2"	6	30'-10"	2	18	4.102	245.589	4.081	185.247	L
9	10	4	9"	7'- 5 3/4"	0'- 6"	3'-10"	0'- 8"	0'- 5 1/4"	29'- 4"	4'-11 1/2"	30'- 1"	116	72	122.276	2.822	404.345	31'- 2"	6	30'-10"	2	22	4.295	259.395	4.248	185.247	P
9	12	4	8"	7'- 5 3/4"	0'- 6"	3'-10"	0'- 8"	0'- 5 1/4"	29'- 4"	4'-11 1/2"	30'- 1"	116	88	127.924	3.015	462.333	31'- 2"	6	30'-10"	2	26	4.505	273.200	4.434	185.247	T
10	4	4	8"	8'- 3 1/4"	0'- 6 1/4"	4'- 2 1/2"	0'- 8 3/8"	0'- 5 1/2"	32'- 4"	5'- 6 1/2"	33'- 1"	128	24	115.352	2.456	400.792	34'- 2"	6	33'-10"	2	10	3.933	236.003	3.971	203.271	D
10	6	4	9"	8'- 3 1/8"	0'- 6 1/2"	4'- 2 1/4"	0'- 8 5/8"	0'- 5 3/4"	32'- 4"	5'- 6 1/4"	33'- 1"	128	40	121.000	2.703	416.574	34'- 2"	6	33'-10"	2	14	4.123	249.808	4.136	203.271	H
10	8	4	8"	8'- 3 1/8"	0'- 6 1/2"	4'- 2 1/4"	0'- 8 5/8"	0'- 5 3/4"	32'- 4"	5'- 6 1/4"	33'- 1"	128	56	126.648	2.896	471.785	34'- 2"	6	33'-10"	2	18	4.333	263.613	4.322	203.271	L
10	10	4	8"	8'- 3"	0'- 6 3/4"	4'- 2"	0'- 9"	0'- 6"	32'- 4"	5'- 6"	33'- 2"	128	72	132.296	3.141	511.840	34'- 2"	6	33'-10"	2	22	4.523	277.419	4.487	203.271	P
10	12	5	11"	8'- 2 7/8"	0'- 7 1/8"	4'- 1 3/4"	0'- 9 1/2"	0'- 6 1/4"	32'- 4"	5'- 5 3/4"	33'- 2"	128	88	137.944	3.388	520.692	34'- 2"	6	33'-10"	2	26	4.713	291.224	4.652	203.271	T
12	6	5	9"	9'- 9 5/8"	0'- 8 1/8"	4'-10 3/8"	0'-10 7/8"	0'- 7 1/4"	38'- 4 1/8"	6'- 7 1/8"	39'- 4"	152	40	141.040	3.421	550.479	40'- 2"	6	39'-10"	2	14	4.543	285.856	4.576	239.319	H
12	8	5	9"	9'- 9 1/2"	0'- 8 3/8"	4'-10 1/8"	0'-11 1/4"	0'- 7 1/2"	38'- 4 1/8"	6'- 6 7/8"	39'- 4"	152	56	146.688	3.678	554.318	40'- 2"	6	39'-10"	2	18	4.729	299.661	4.737	239.319	L
12	10	5	9"	9'- 9 1/2"	0'- 8 3/8"	4'-10 1/8"	0'-11 1/4"	0'- 7 1/2"	38'- 4 1/8"	6'- 6 7/8"	39'- 4"	152	72	152.336	3.870	628.438	40'- 2"	6	39'-10"	2	22	4.939	313.467	4.922	239.319	P
12	12	5	9"	9'- 9 3/8"	0'- 8 5/8"	4'- 9 7/8"	0'-11 5/8"	0'- 7 3/4"	38'- 4 1/8"	6'- 6 5/8"	39'- 5"	152	88	157.984	4.123	681.877	40'- 2"	6	39'-10"	2	26	5.124	327.272	5.083	239.319	T

A COPY OF THE ORIGINAL SEALED AND SIGNED DRAWING IS ON FILE IN THE CENTRAL OFFICE.

SPECIFICATION REFERENCE

TRIPLE BOX CULVERTS

5 TO 10 FT. FILLS

VIRGINIA DEPARTMENT OF TRANSPORTATION

VDOT

ROAD AND BRIDGE STANDARDS

REVISION DATE 07/11

SHEET 2 OF 2

1004.10

BCT-20

FOR TYPICAL SECTION, NOTES AND OTHER DETAILS, REFER TO STANDARD BCT-DT.

DIMENSIONS						REINFORCING STEEL																										
SPAN	HGHT	T1	T2	T3	T4							BH1			BH2			BH3				BH4					BV1			BV2		
(FT.)	(FT.)	TOP SLAB	BOTTOM SLAB	EXTERIOR WALL (IN.)	INTERIOR WALL (IN.)	A	B	C	D	E	F	SIZE	SPACING c-c	LENGTH	SIZE	SPACING c-c	LENGTH	SIZE	SPACING c-c	a	LENGTH	SIZE	SPACING c-c	a	b	LENGTH	SIZE	SPACING c-c	LENGTH	SIZE	SPACING c-c	LENGTH
3	3	8"	8"	8"	8"	9	9'- 0"	9	9'- 0"	1	1'- 0"	4	12"	10'-3"	4	12"	11'-4"	--	---	----	----	4	12"	2'-4"	2'-8"	4'-9"	4	12"	4'-0"	4	12"	4'-0"
3	4	8"	8"	8"	8"	9	9'- 0"	9	9'- 0"	2	2'- 0"	4	12"	10'-3"	4	12"	11'-4"	--	---	----	----	4	12"	2'-4"	3'-2"	5'-3"	4	12"	5'-0"	4	12"	5'-0"
4	3	8"	8"	8"	8"	12	12'- 0"	12	12'- 0"	1	1'- 0"	4	12"	13'-3"	4	12"	14'-4"	--	---	----	----	4	12"	2'-4"	2'-8"	4'-9"	4	12"	4'-0"	4	12"	4'-0"
4	4	8"	8"	8"	8"	12	12'- 0"	12	12'- 0"	2	2'- 0"	4	12"	13'-3"	4	12"	14'-4"	--	---	----	----	4	12"	2'-4"	3'-2"	5'-3"	4	12"	5'-0"	4	12"	5'-0"
4	5	8"	8"	8"	8"	12	12'- 0"	12	12'- 0"	3	3'- 0"	4	12"	13'-3"	4	12"	14'-4"	--	---	----	----	4	12"	2'-4"	3'-8"	5'-9"	4	12"	6'-0"	4	12"	6'-0"
4	6	8"	8"	8"	8"	12	12'- 0"	12	12'- 0"	4	4'- 0"	4	12"	13'-3"	4	12"	14'-4"	--	---	----	----	4	12"	2'-4"	4'-2"	6'-3"	4	12"	7'-0"	4	12"	7'-0"
5	3	8"	8"	8"	8"	15	15'- 0"	15	15'- 0"	1	1'- 0"	4	12"	16'-4"	4	12"	17'-3"	4	12"	2'-6"	4'-9"	4	12"	2'-4"	2'-8"	4'-9"	4	12"	4'-0"	4	12"	4'-0"
5	4	8"	8"	8"	8"	15	15'- 0"	15	15'- 0"	2	2'- 0"	4	12"	16'-4"	4	12"	17'-3"	4	12"	2'-6"	4'-9"	4	12"	2'-4"	3'-2"	5'-3"	4	12"	5'-0"	4	12"	5'-0"
5	5	8"	8"	8"	8"	15	15'- 0"	15	15'- 0"	3	3'- 0"	4	12"	16'-4"	4	12"	17'-3"	3	12"	2'-6"	4'-10"	4	12"	2'-4"	3'-8"	5'-9"	4	12"	6'-0"	4	12"	6'-0"
5	6	8"	8"	8"	8"	15	15'- 0"	15	15'- 0"	4	4'- 0"	4	12"	16'-4"	4	12"	17'-3"	3	12"	2'-9"	5'-3"	4	12"	2'-4"	4'-2"	6'-3"	4	12"	7'-0"	4	12"	7'-0"
5	7	8"	8"	8"	8"	15	15'- 0"	15	15'- 0"	5	5'- 0"	4	12"	16'-4"	4	12"	17'-3"	4	12"	2'-11"	5'-7"	4	12"	2'-4"	4'-8"	6'-9"	5	12"	8'-0"	4	12"	8'-0"
6	4	9"	9"	8"	8"	18	18'- 0"	18	18'- 0"	2	2'- 0"	4	12"	19'-4"	4	12"	20'-3"	4	12"	2'-9"	5'-2"	4	12"	2'-4"	3'-3"	5'-4"	4	12"	5'-2"	4	12"	5'-2"
6	5	9"	9"	8"	8"	18	18'- 0"	18	18'- 0"	3	3'- 0"	4	11"	19'-4"	4	11"	20'-3"	4	11"	2'-9"	5'-2"	4	11"	2'-4"	3'-9"	5'-10"	4	12"	6'-2"	4	12"	6'-2"
6	6	9¼"	9¼"	8"	8"	18	18'- 0"	18	18'- 0"	4	4'- 0"	4	11"	19'-4"	4	11"	20'-3"	4	11"	2'-10"	5'-5"	4	11"	2'-4"	4'-4"	6'-4"	4	12"	7'-2"	4	12"	7'-2"
6	7	9¼"	9¼"	8"	8"	18	18'- 0"	18	18'- 0"	5	5'- 0"	4	11"	19'-4"	4	11"	20'-3"	4	11"	3'-1"	5'-9"	4	11"	2'-4"	4'-10"	6'-10"	5	12"	8'-2"	4	12"	8'-2"
6	8	9¼"	9¼"	8"	8"	18	18'- 0"	18	18'- 0"	6	6'- 0"	4	11"	19'-4"	4	11"	20'-3"	4	11"	3'-3"	6'-2"	4	11"	2'-4"	5'-4"	7'-4"	5	12"	9'-2"	4	12"	9'-2"
7	4	10½"	10½"	8"	8"	21	21'- 0"	21	21'- 0"	2	2'- 0"	4	10"	22'-4"	4	10"	23'-3"	3	10"	2'-11"	5'-8"	4	10"	2'-4"	3'-5"	5'-5"	4	12"	5'-5"	4	12"	5'-5"
7	6	10¾"	10¾"	8"	8"	21	21'- 0"	21	21'- 0"	4	4'- 0"	4	10"	22'-4"	4	10"	23'-3"	3	10"	3'-0"	5'-8"	4	10"	2'-4"	4'-5"	6'-6"	4	12"	7'-5"	4	12"	7'-5"
7	8	11"	11"	8"	8"	21	21'- 0"	21	21'- 0"	6	6'- 0"	4	9"	22'-4"	4	9"	23'-3"	3	9"	3'-5"	6'-7"	4	9"	2'-4"	5'-5"	7'-6"	5	12"	9'-6"	4	12"	9'-6"
7	10	11"	11"	8½"	8"	21	21'- 0"	21	21'- 0"	8	8'- 0"	4	9"	22'-1"	4	9"	23'-5"	--	---	----	----	5	9"	2'-6"	6'-7"	8'-9"	5	7"	11'-6"	4	12"	11'-6"
8	4	11¾"	11¾"	8"	8"	24	24'- 0"	24	24'- 0"	2	2'- 0"	4	9"	25'-4"	5	9"	26'-3"	3	9"	3'-2"	6'-1"	4	9"	2'-4"	3'-6"	5'-7"	4	11"	5'-7"	4	12"	5'-7"
8	6	12"	12"	8"	8"	24	24'- 0"	24	24'- 0"	4	4'- 0"	4	9"	25'-4"	5	9"	26'-3"	3	9"	3'-2"	6'-1"	4	9"	2'-4"	4'-6"	6'-7"	4	12"	7'-8"	4	12"	7'-8"
8	8	12¼"	12¼"	8"	8"	24	24'- 0"	24	24'- 0"	6	6'- 0"	4	9"	25'-4"	5	9"	26'-3"	3	9"	3'-6"	6'-9"	4	9"	2'-4"	5'-7"	7'-7"	5	12"	9'-8"	4	12"	9'-8"
8	10	12½"	12½"	8"	8"	24	24'- 0"	24	24'- 0"	8	8'- 0"	4	9"	25'-0"	5	9"	26'-3"	3	9"	3'-11"	7'-7"	5	9"	2'-6"	6'-9"	8'-10"	5	7"	11'-9"	4	12"	11'-9"
9	4	13"	13"	8"	8"	27	27'- 0"	27	27'- 0"	2	2'- 0"	5	9"	28'-4"	5	9"	29'-3"	3	9"	3'-4"	6'-5"	4	9"	2'-9"	3'-7"	6'-1"	4	10"	5'-10"	4	12"	5'-10"
9	6	13"	13"	8"	8"	27	27'- 0"	27	27'- 0"	4	4'- 0"	5	9"	28'-4"	5	9"	29'-3"	3	9"	3'-4"	6'-5"	4	9"	2'-9"	4'-7"	7'-1"	4	12"	7'-10"	4	12"	7'-10"
9	8	13¼"	13¼"	8"	8"	27	27'- 0"	27	27'- 0"	6	6'- 0"	5	9"	28'-4"	5	9"	29'-3"	3	9"	3'-7"	6'-11"	4	9"	2'-9"	5'-8"	8'-1"	5	12"	9'-10"	4	12"	9'-10"
9	10	13¼"	13¼"	8"	8"	27	27'- 0"	27	27'- 0"	8	8'- 0"	5	9"	28'-0"	5	9"	29'-3"	3	9"	4'-0"	7'-9"	5	9"	2'-11"	6'-10"	9'-4"	6	8½"	11'-10"	4	12"	11'-10"
9	12	13½"	13½"	9½	8"	27	27'- 0"	27	27'- 0"	10	10'- 0"	5	8"	28'-3"	5	8"	29'-6"	4	8"	4'-5"	8'-6"	5	9"	2'-11"	7'-10"	10'-4"	6	7½"	13'-11"	4	12"	13'-11"
10	4	14¼"	14¼"	8"	8"	30	30'- 0"	30	30'- 0"	2	2'- 0"	5	9"	31'-0"	5	9"	32'-3"	--	---	----	----	5	9"	2'-11"	3'-11"	6'-5"	4	10"	6'-0"	4	12"	6'-0"
10	6	14½"	14½"	8"	8"	30	30'- 0"	30	30'- 0"	4	4'- 0"	5	9"	31'-3"	5	9"	32'-3"	3	9"	3'-6"	6'-10"	4	9"	2'-9"	4'-9"	7'-2"	4	12"	8'-0"	4	12"	8'-0"
10	8	14½"	14½"	8"	8"	30	30'- 0"	30	30'- 0"	6	6'- 0"	5	9"	31'-0"	5	9"	32'-3"	--	---	----	----	5	9"	2'-11"	5'-11"	8'-5"	5	12"	10'-0"	4	12"	10'-0"
10	10	14½"	14½"	8"	8"	30	30'- 0"	30	30'- 0"	8	8'- 0"	5	9"	31'-0"	5	9"	32'-3"	3	9"	4'-1"	7'-11"	5	9"	2'-11"	6'-11"	9'-5"	6	9"	12'-0"	4	12"	12'-0"
10	12	14¾"	14¾"	9½	8"	30	30'- 0"	30	30'- 0"	10	10'- 0"	5	9"	31'-0"	5	9"	32'-6"	3	9"	4'-6"	8'-9"	6	9"	3'-0"	8'-1"	10'-8"	6	7½"	14'-1"	4	12"	14'-1"
12	6	17"	17"	8"	8"	36	36'- 0"	36	36'- 0"	4	4'- 0"	6	9"	37'-3"	6	9"	38'-4"	3	9"	3'-11"	7'-8"	4	9"	3'-2"	4'-11"	7'-10"	4	12"	8'-6"	4	12"	8'-6"
12	8	17"	17"	8"	8"	36	36'- 0"	36	36'- 0"	6	6'- 0"	6	9"	37'-3"	6	9"	38'-4"	3	9"	3'-11"	7'-8"	4	9"	3'-2"	5'-11"	8'-10"	5	12"	10'-6"	4	12"	10'-6"
12	10	17¼"	17¼"	8"	8"	36	36'- 0"	36	36'- 0"	8	8'- 0"	6	9"	37'-0"	6	9"	38'-4"	3	9"	4'-4"	8'-5"	5	9"	3'-4"	7'-2"	10'-1"	6	9"	12'-6"	4	12"	12'-6"
12	12	17¼"	17¼"	9½	8"	36	36'- 0"	36	36'- 0"	10	10'- 0"	6	9"	37'-0"	6	9"	38'-7"	3	9"	4'-9"	9'-2"	6	9"	3'-5"	8'-4"	11'-4"	5	5"	14'-6"	4	12"	14'-6"

A COPY OF THE ORIGINAL SEALED AND SIGNED DRAWING IS ON FILE IN THE CENTRAL OFFICE

VDOT
ROAD AND BRIDGE STANDARDS

SHEET 1 OF 2 | REVISION DATE
1004.11 | 07/11

TRIPLE BOX CULVERTS

10 TO 20 FT. FILLS

VIRGINIA DEPARTMENT OF TRANSPORTATION

SPECIFICATION REFERENCE

BCT-20

FOR TYPICAL SECTION, NOTES AND OTHER DETAILS, REFER TO STANDARD BCT-DT.

SPAN	HGHT	REINFORCING STEEL BT1												REINFORCING STEEL (LBS/LONG. JT)	QUAN./LF		HEADWALLS								WINGWALL
															CONCRETE CLASS A4 (CY/LF)	REINFORCING STEEL (LBS/LF)	G	HW1							
(FT.)	(FT.)	SIZE	SPACING c-c	a	b	c	d	e	f	g	LENGTH	NO. BL1 #4 BARS	NO. BL2 #3 BARS				HEADWALL LENGTH	SIZE	LENGTH	NO. HW2 BARS	NO. HW3 BARS	INLET CONCRETE CL. A4 (CY)	INLET REINFORCING STEEL (LBS)	OUTLET CONCRETE CL. A4 (CY)	OUTLET REINFORCING STEEL (LBS)	
3	3	4	12"	2'-7"	0'- 4"	1'-10"	0'- 5 1/8"	0'- 3 1/4"	11'-3"	1'-3"	11'-9"	44	16	42.388	0.989	108.604	13'- 2"	6	12'-10"	2	8	1.827	102.932	1.808	77.103	A
3	4	4	12"	2'-7"	0'- 4"	1'-10"	0'- 5 1/8"	0'- 3 1/4"	11'-3"	1'-3"	11'-9"	44	24	45.212	1.087	116.956	13'- 2"	6	12'-10"	2	10	1.932	109.835	1.901	77.103	C
4	3	4	12"	3'-5"	0'- 4"	2'-3"	0'- 5 1/8"	0'- 3 1/4"	14'-3"	1'-10"	14'-9"	56	16	52.408	1.136	128.644	16'- 2"	6	15'-10"	2	8	2.131	120.956	2.121	95.127	A
4	4	4	12"	3'-5"	0'- 4"	2'-3"	0'- 5 1/8"	0'- 3 1/4"	14'-3"	1'-10"	14'-9"	56	24	55.232	1.234	136.996	16'- 2"	6	15'-10"	2	10	2.236	127.859	2.214	95.127	C
4	5	4	12"	3'-5"	0'- 4"	2'-3"	0'- 5 1/8"	0'- 3 1/4"	14'-3"	1'-10"	14'-9"	56	32	58.056	1.332	145.348	16'- 2"	6	15'-10"	2	12	2.341	134.761	2.307	95.127	E
4	6	4	12"	3'-5"	0'- 4"	2'-3"	0'- 5 1/8"	0'- 3 1/4"	14'-3"	1'-10"	14'-9"	56	40	60.880	1.430	153.700	16'- 2"	6	15'-10"	2	14	2.446	141.664	2.399	95.127	G
5	3	4	12"	4'-2"	0'- 4"	2'-8"	0'- 5 1/8"	0'- 3 1/4"	17'-4"	2'-5"	17'-9"	68	16	62.428	1.281	161.335	19'- 2"	6	18'-10"	2	8	2.434	138.980	2.435	113.151	A
5	4	4	12"	4'-2"	0'- 4"	2'-8"	0'- 5 1/8"	0'- 3 1/4"	17'-4"	2'-5"	17'-9"	68	24	65.252	1.379	169.687	19'- 2"	6	18'-10"	2	10	2.539	145.883	2.527	113.151	C
5	5	4	12"	4'-2"	0'- 4"	2'-8"	0'- 5 1/8"	0'- 3 1/4"	17'-4"	2'-5"	17'-9"	68	32	68.076	1.478	172.608	19'- 2"	6	18'-10"	2	12	2.644	152.785	2.620	113.151	E
5	6	4	12"	4'-2"	0'- 4"	2'-8"	0'- 5 1/8"	0'- 3 1/4"	17'-4"	2'-5"	17'-9"	68	40	70.900	1.576	181.562	19'- 2"	6	18'-10"	2	14	2.750	159.688	2.713	113.151	G
5	7	4	12"	4'-2"	0'- 4"	2'-8"	0'- 5 1/8"	0'- 3 1/4"	17'-4"	2'-5"	17'-9"	68	48	73.724	1.673	202.880	19'- 2"	6	18'-10"	2	16	2.855	166.591	2.806	113.151	I
6	4	4	12"	4'-11"	0'- 5"	3'-0"	0'- 6 5/8"	0'- 4 1/4"	20'-4"	2'-11"	20'-10"	80	24	75.272	1.653	191.868	22'- 2"	6	21'-10"	2	10	2.799	163.907	2.797	131.175	C
6	5	4	11"	4'-11"	0'- 5"	3'-0"	0'- 6 5/8"	0'- 4 1/4"	20'-4"	2'-11"	20'-10"	80	32	78.096	1.751	210.223	22'- 2"	6	21'-10"	2	12	2.904	170.809	2.889	131.175	E
6	6	4	11"	4'-11"	0'- 5 1/4"	3'-0"	0'- 7"	0'- 4 1/2"	20'-4"	2'-10"	20'-11"	80	40	80.920	1.881	219.582	22'- 2"	6	21'-10"	2	14	3.016	177.712	2.990	131.175	H
6	7	4	11"	4'-11"	0'- 5 1/4"	3'-0"	0'- 7"	0'- 4 1/2"	20'-4"	2'-10"	20'-11"	80	48	83.744	1.978	235.377	22'- 2"	6	21'-10"	2	16	3.121	184.615	3.082	131.175	J
6	8	4	11"	4'-11"	0'- 5 1/4"	3'-0"	0'- 7"	0'- 4 1/2"	20'-4"	2'-10"	20'-11"	80	56	86.568	2.076	245.767	22'- 2"	6	21'-10"	2	18	3.227	191.517	3.175	131.175	L
7	4	4	10"	5'-7"	0'- 6 1/2"	3'-5"	0'- 8 3/4"	0'- 5 3/4"	23'-4"	3'-3"	24'-1"	92	24	85.292	2.036	231.430	25'- 2"	6	24'-10"	2	10	3.031	181.931	3.039	149.199	D
7	6	4	10"	5'-7"	0'- 6 3/4"	3'-5"	0'- 9"	0'- 6"	23'-4"	3'-2"	24'-1"	92	40	90.940	2.269	249.062	25'- 2"	6	24'-10"	2	14	3.228	195.736	3.211	149.199	H
7	8	4	9"	5'-7"	0'- 7"	3'-5"	0'- 9 3/8"	0'- 6 1/4"	23'-4"	3'-2"	24'-2"	92	56	96.588	2.500	291.625	25'- 2"	6	24'-10"	2	18	3.425	209.541	3.383	149.199	L
7	10	4	9"	5'-7"	0'- 7"	3'-5"	0'- 9 3/8"	0'- 6 1/4"	23'-5"	3'-2"	24'-3"	92	72	102.236	2.731	332.978	25'- 2"	6	24'-10"	2	22	3.635	223.347	3.569	149.199	P
8	4	4	9"	6'-3"	0'- 7 3/4"	3'-10"	0'-10 1/2"	0'- 7"	26'-4"	3'-7"	27'-3"	104	24	95.312	2.431	300.279	28'- 2"	6	27'-10"	2	10	3.233	199.955	3.251	167.223	D
8	6	4	9"	6'-3"	0'- 8"	3'-10"	0'-10 7/8"	0'- 7 1/4"	26'-4"	3'-7"	27'-3"	104	40	100.960	2.668	317.493	28'- 2"	6	27'-10"	2	14	3.428	213.760	3.421	167.223	H
8	8	4	9"	6'-3"	0'- 8 1/4"	3'-10"	0'-11 1/8"	0'- 7 1/2"	26'-4"	3'-6"	27'-4"	104	56	106.608	2.905	344.092	28'- 2"	6	27'-10"	2	18	3.622	227.565	3.591	167.223	L
8	10	4	9"	6'-3"	0'- 8 1/2"	3'-10"	0'-11 1/2"	0'- 7 3/4"	26'-4"	3'-6"	27'-4"	104	72	112.256	3.139	400.681	28'- 2"	6	27'-10"	2	22	3.817	241.371	3.760	167.223	P
9	4	5	9"	7'-0"	0'- 9"	4'-3"	1'- 1/8"	0'- 8 1/8"	29'-4"	4'-0"	30'-5"	116	24	105.332	2.871	390.708	31'- 2"	6	30'-10"	2	10	3.412	217.979	3.440	185.247	D
9	6	5	9"	7'-0"	0'- 9"	4'-3"	1'- 1/8"	0'- 8 1/8"	29'-4"	4'-0"	30'-5"	116	40	110.980	3.067	406.744	31'- 2"	6	30'-10"	2	14	3.622	231.784	3.625	185.247	H
9	8	5	9"	7'-0"	0'- 9 1/4"	4'-3"	1'- 1/2"	0'- 8 3/8"	29'-4"	4'-0"	30'-5"	116	56	116.628	3.308	433.034	31'- 2"	6	30'-10"	2	18	3.814	245.589	3.793	185.247	L
9	10	5	9"	7'-0"	0'- 9 1/4"	4'-3"	1'- 1/2"	0'- 8 3/8"	29'-4"	4'-0"	30'-5"	116	72	122.276	3.501	497.976	31'- 2"	6	30'-10"	2	22	4.025	259.395	3.978	185.247	P
9	12	5	8"	7'-1"	0'- 9 1/2"	4'-3"	1'- 7/8"	0'- 8 5/8"	29'-7"	3'-11"	30'-9"	116	88	127.924	3.869	590.289	31'- 2"	6	30'-10"	2	26	4.217	273.200	4.146	185.247	T
10	4	5	9"	7'-8"	0'-10 1/4"	4'-8"	1'- 1 7/8"	0'- 9 3/8"	32'-3"	4'-5"	33'-7"	128	24	115.352	3.361	425.479	34'- 2"	6	33'-10"	2	10	3.567	236.003	3.605	203.271	D
10	6	5	9"	7'-8"	0'-10 1/2"	4'-8"	1'- 2 1/4"	0'- 9 5/8"	32'-3"	4'-4"	33'-7"	128	40	121.000	3.607	442.615	34'- 2"	6	33'-10"	2	14	3.757	249.808	3.771	203.271	H
10	8	5	9"	7'-8"	0'-10 1/2"	4'-8"	1'- 2 1/4"	0'- 9 5/8"	32'-3"	4'-4"	33'-7"	128	56	126.648	3.803	470.995	34'- 2"	6	33'-10"	2	18	3.968	263.613	3.956	203.271	L
10	10	5	9"	7'-8"	0'-10 1/2"	4'-8"	1'- 2 1/4"	0'- 9 5/8"	32'-3"	4'-4"	33'-7"	128	72	132.296	3.996	531.092	34'- 2"	6	33'-10"	2	22	4.178	277.419	4.141	203.271	P
10	12	5	9"	7'-9"	0'-10 3/4"	4'-8"	1'- 2 5/8"	0'- 9 7/8"	32'-6"	4'-4"	33'-11"	128	88	137.944	4.372	598.219	34'- 2"	6	33'-10"	2	26	4.368	291.224	4.307	203.271	T
12	6	6	9"	9'-1"	1'- 1"	5'-5"	1'- 5 5/8"	1'- 0"	38'-3"	5'-3"	39'-11"	152	40	141.040	4.725	656.619	40'- 2"	6	39'-10"	2	14	4.013	285.856	4.046	239.319	I
12	8	6	9"	9'-1"	1'- 1"	5'-5"	1'- 5 5/8"	1'- 0"	38'-3"	5'-3"	39'-11"	152	56	146.688	4.920	682.088	40'- 2"	6	39'-10"	2	18	4.223	299.661	4.232	239.319	M
12	10	6	9"	9'-1"	1'- 1 1/4"	5'-5"	1'- 6"	1'- 1/4"	38'-3"	5'-2"	39'-11"	152	72	152.336	5.172	746.974	40'- 2"	6	39'-10"	2	22	4.409	313.467	4.392	239.319	Q
12	12	6	9"	9'-2"	1'- 1 1/4"	5'-5"	1'- 6"	1'- 1/4"	38'-6"	5'-2"	40'-2"	152	88	157.984	5.502	818.885	40'- 2"	6	39'-10"	2	26	4.619	327.272	4.578	239.319	U

A COPY OF THE ORIGINAL SEALED AND SIGNED DRAWING IS ON FILE IN THE CENTRAL OFFICE.

SPECIFICATION REFERENCE

TRIPLE BOX CULVERTS

10 TO 20 FT. FILLS

VIRGINIA DEPARTMENT OF TRANSPORTATION

VDOT

ROAD AND BRIDGE STANDARDS

REVISION DATE 07/11

SHEET 2 OF 2

1004.12

BCT-30

FOR TYPICAL SECTION, NOTES AND OTHER DETAILS, REFER TO STANDARD BCT-DT.

DIMENSIONS						REINFORCING STEEL																										
SPAN	HGHT	T1	T2	T3	T4							BH1			BH2			BH3				BH4					BV1			BV2		
(FT.)	(FT.)	TOP SLAB	BOTTOM SLAB	EXTERIOR WALL (IN.)	INTERIOR WALL (IN.)	A	B	C	D	E	F	SIZE	SPACING c-c	LENGTH	SIZE	SPACING c-c	LENGTH	SIZE	SPACING c-c	a	LENGTH	SIZE	SPACING c-c	a	b	LENGTH	SIZE	SPACING c-c	LENGTH	SIZE	SPACING c-c	LENGTH
3	3	8"	8"	8"	8"	9	9'- 0"	9	9'- 0"	1	1'- 0"	4	12"	10' - 3"	4	12"	11' - 4"	--	---	----	----	4	12"	2' - 4"	2' - 8"	4' - 9"	4	12"	4' - 0"	4	12"	4' - 0"
3	4	8"	8"	8"	8"	9	9'- 0"	9	9'- 0"	2	2'- 0"	4	12"	10' - 3"	4	12"	11' - 4"	--	---	----	----	4	12"	2' - 4"	3' - 2"	5' - 3"	4	12"	5' - 0"	4	12"	5' - 0"
4	3	8½"	8½"	8"	8"	12	12'- 0"	12	12'- 0"	1	1'- 0"	4	12"	13' - 3"	4	12"	14' - 4"	--	---	----	----	4	12"	2' - 4"	2' - 9"	4' - 9"	4	12"	4' - 1"	4	12"	4' - 1"
4	4	8½"	8½"	8"	8"	12	12'- 0"	12	12'- 0"	2	2'- 0"	4	12"	13' - 3"	4	12"	14' - 4"	--	---	----	----	4	12"	2' - 4"	3' - 3"	5' - 3"	4	12"	5' - 1"	4	12"	5' - 1"
4	5	8½"	8½"	8"	8"	12	12'- 0"	12	12'- 0"	3	3'- 0"	4	12"	13' - 3"	4	12"	14' - 4"	--	---	----	----	4	12"	2' - 4"	3' - 9"	5' - 9"	4	12"	6' - 1"	4	12"	6' - 1"
4	6	8½"	8½"	8"	8"	12	12'- 0"	12	12'- 0"	4	4'- 0"	4	12"	13' - 3"	4	12"	14' - 4"	--	---	----	----	4	12"	2' - 4"	4' - 3"	6' - 3"	5	12"	7' - 1"	4	12"	7' - 1"
5	3	10"	10"	8"	8"	15	15'- 0"	15	15'- 0"	1	1'- 0"	4	12"	16' - 4"	4	12"	17' - 3"	3	12"	2' - 6"	4' - 10"	4	12"	2' - 4"	2' - 10"	4' - 11"	4	12"	4' - 4"	4	12"	4' - 4"
5	4	10"	10"	8"	8"	15	15'- 0"	15	15'- 0"	2	2'- 0"	4	12"	16' - 4"	4	12"	17' - 3"	3	12"	2' - 6"	4' - 10"	4	12"	2' - 4"	3' - 4"	5' - 5"	4	12"	5' - 4"	4	12"	5' - 4"
5	5	10¼"	10¼"	8"	8"	15	15'- 0"	15	15'- 0"	3	3'- 0"	4	12"	16' - 4"	4	12"	17' - 3"	3	12"	2' - 9"	5' - 3"	4	12"	2' - 4"	3' - 11"	5' - 11"	4	12"	6' - 4"	4	12"	6' - 4"
5	6	10"	10"	8"	8"	15	15'- 0"	15	15'- 0"	4	4'- 0"	4	12"	16' - 4"	4	12"	17' - 3"	4	12"	2' - 11"	5' - 6"	4	12"	2' - 4"	4' - 4"	6' - 5"	5	12"	7' - 4"	4	12"	7' - 4"
5	7	10"	10"	8"	8"	15	15'- 0"	15	15'- 0"	5	5'- 0"	4	12"	16' - 4"	4	12"	17' - 3"	4	12"	3' - 1"	5' - 11"	4	12"	2' - 4"	4' - 10"	6' - 11"	5	12"	8' - 3"	4	12"	8' - 3"
6	4	12"	12"	8"	8"	18	18'- 0"	18	18'- 0"	2	2'- 0"	4	10"	19' - 4"	4	10"	20' - 3"	--	---	----	----	4	10"	2' - 4"	3' - 6"	5' - 7"	4	12"	5' - 8"	4	12"	5' - 8"
6	5	12¼"	12¼"	8"	8"	18	18'- 0"	18	18'- 0"	3	3'- 0"	4	10"	19' - 4"	4	10"	20' - 3"	--	---	----	----	4	10"	2' - 4"	4' - 1"	6' - 1"	4	12"	6' - 8"	4	12"	6' - 8"
6	6	12¼"	12¼"	8"	8"	18	18'- 0"	18	18'- 0"	4	4'- 0"	4	10"	19' - 4"	4	10"	20' - 3"	--	---	----	----	4	10"	2' - 4"	4' - 7"	6' - 7"	4	12"	7' - 8"	4	12"	7' - 8"
6	7	11½"	11½"	8"	8"	18	18'- 0"	18	18'- 0"	5	5'- 0"	4	10"	19' - 4"	4	10"	20' - 3"	3	10"	3' - 3"	6' - 3"	4	10"	2' - 4"	5' - 0"	7' - 0"	5	12"	8' - 6"	4	12"	8' - 6"
6	8	11¾"	11¾"	8"	8"	18	18'- 0"	18	18'- 0"	6	6'- 0"	4	10"	19' - 0"	4	10"	20' - 3"	--	---	----	----	5	10"	2' - 6"	5' - 8"	7' - 9"	5	9"	9' - 7"	4	12"	9' - 7"
7	4	13¼"	13¼"	8"	8"	21	21'- 0"	21	21'- 0"	2	2'- 0"	4	9"	22' - 4"	5	9"	23' - 3"	--	---	----	----	4	9"	2' - 4"	3' - 8"	5' - 8"	4	12"	5' - 10"	4	12"	5' - 10"
7	6	13¼"	13¼"	8"	8"	21	21'- 0"	21	21'- 0"	4	4'- 0"	4	9"	22' - 4"	5	9"	23' - 3"	--	---	----	----	4	9"	2' - 4"	4' - 8"	6' - 8"	4	12"	7' - 10"	4	12"	7' - 10"
7	8	13¼"	13¼"	8"	8"	21	21'- 0"	21	21'- 0"	6	6'- 0"	4	9"	22' - 4"	5	9"	23' - 3"	3	9"	3' - 7"	6' - 11"	4	9"	2' - 4"	5' - 8"	7' - 8"	5	9"	9' - 10"	4	12"	9' - 10"
7	10	13¼"	13¼"	9½"	8"	21	21'- 0"	21	21'- 0"	8	8'- 0"	4	9"	22' - 3"	5	9"	23' - 6"	3	9"	4' - 0"	7' - 9"	5	9"	2' - 6"	6' - 10"	8' - 11"	7	11½"	11' - 10"	4	12"	11' - 10"
8	4	15"	15"	8"	8"	24	24'- 0"	24	24'- 0"	2	2'- 0"	5	9"	25' - 4"	5	9"	26' - 3"	--	---	----	----	4	9"	2' - 9"	3' - 9"	6' - 3"	4	12"	6' - 2"	4	12"	6' - 2"
8	6	15"	15"	8"	8"	24	24'- 0"	24	24'- 0"	4	4'- 0"	5	9"	25' - 4"	5	9"	26' - 3"	--	---	----	----	4	9"	2' - 9"	4' - 9"	7' - 3"	4	12"	8' - 1"	4	12"	8' - 1"
8	8	15"	15"	8"	8"	24	24'- 0"	24	24'- 0"	6	6'- 0"	5	9"	25' - 4"	5	9"	26' - 3"	3	9"	3' - 9"	7' - 3"	4	9"	2' - 9"	5' - 9"	8' - 3"	5	9½"	10' - 1"	4	12"	10' - 1"
8	10	15"	15"	9½"	8"	24	24'- 0"	24	24'- 0"	8	8'- 0"	5	9"	25' - 3"	5	9"	26' - 6"	3	9"	4' - 1"	8' - 0"	5	9"	2' - 11"	6' - 11"	9' - 6"	7	11½"	12' - 1"	4	12"	12' - 1"
9	4	16½"	16½"	8"	8"	27	27'- 0"	27	27'- 0"	2	2'- 0"	5	8"	28' - 4"	5	8"	29' - 3"	--	---	----	----	4	8"	2' - 9"	3' - 11"	6' - 4"	4	12"	6' - 5"	4	12"	6' - 5"
9	6	16½"	16½"	8"	8"	27	27'- 0"	27	27'- 0"	4	4'- 0"	5	9"	28' - 4"	5	9"	29' - 3"	--	---	----	----	4	9"	2' - 9"	4' - 11"	7' - 4"	4	12"	8' - 4"	4	12"	8' - 4"
9	8	16½"	16½"	8"	8"	27	27'- 0"	27	27'- 0"	6	6'- 0"	5	8"	28' - 4"	5	8"	29' - 3"	3	8"	3' - 10"	7' - 6"	4	8"	2' - 9"	5' - 11"	8' - 4"	5	9½"	10' - 4"	4	12"	10' - 4"
9	10	16½"	16½"	9"	8"	27	27'- 0"	27	27'- 0"	8	8'- 0"	5	8"	28' - 2"	5	8"	29' - 6"	3	8"	4' - 3"	8' - 3"	5	8"	2' - 11"	7' - 1"	9' - 7"	7	11½"	12' - 4"	4	12"	12' - 4"
9	12	16¾"	16¾"	11"	8"	27	27'- 0"	27	27'- 0"	10	10'- 0"	6	9"	28' - 0"	6	9"	29' - 9"	--	---	----	----	7	9"	3' - 7"	8' - 6"	11' - 7"	6	7½"	14' - 5"	4	12"	14' - 5"
10	4	18¼"	18¼"	8"	8"	30	30'- 0"	30	30'- 0"	2	2'- 0"	6	9"	31' - 3"	6	9"	32' - 3"	--	---	----	----	4	9"	3' - 2"	4' - 1"	6' - 11"	4	12"	6' - 8"	4	11"	6' - 8"
10	6	18¼"	18¼"	8"	8"	30	30'- 0"	30	30'- 0"	4	4'- 0"	6	9"	31' - 3"	6	9"	32' - 3"	--	---	----	----	4	9"	3' - 2"	5' - 1"	7' - 11"	4	12"	8' - 8"	4	11"	8' - 8"
10	8	18¼"	18¼"	8"	8"	30	30'- 0"	30	30'- 0"	6	6'- 0"	6	9"	31' - 3"	6	9"	32' - 3"	3	9"	4' - 0"	7' - 9"	4	9"	3' - 2"	6' - 1"	8' - 11"	5	9½"	10' - 8"	4	11"	10' - 8"
10	10	18½"	18½"	9"	8"	30	30'- 0"	30	30'- 0"	8	8'- 0"	6	9"	31' - 2"	6	9"	32' - 5"	3	9"	4' - 5"	8' - 7"	5	9"	3' - 4"	7' - 3"	10' - 2"	6	8"	12' - 9"	4	11"	12' - 9"
10	12	18½"	18½"	11"	8"	30	30'- 0"	30	30'- 0"	10	10'- 0"	6	9"	31' - 3"	6	9"	32' - 9"	4	9"	4' - 10"	9' - 4"	6	9"	3' - 5"	8' - 5"	11' - 5"	5	5½"	14' - 9"	4	11"	14' - 9"
12	6	21½"	21½"	8"	8"	36	36'- 0"	36	36'- 0"	4	4'- 0"	6	8"	37' - 3"	6	8"	38' - 4"	--	---	----	----	4	8"	3' - 2"	5' - 4"	8' - 2"	4	12"	9' - 3"	4	10"	9' - 3"
12	8	21½"	21½"	8"	8"	36	36'- 0"	36	36'- 0"	6	6'- 0"	6	8"	37' - 3"	6	8"	38' - 4"	3	8"	4' - 3"	8' - 4"	4	8"	3' - 2"	6' - 4"	9' - 2"	5	9"	11' - 3"	4	10"	11' - 3"
12	10	21½"	21½"	8½"	8"	36	36'- 0"	36	36'- 0"	8	8'- 0"	6	8"	37' - 1"	6	8"	38' - 4"	3	8"	4' - 8"	9' - 1"	5	8"	3' - 4"	7' - 6"	10' - 5"	6	8"	13' - 3"	4	10"	13' - 3"
12	12	21¾"	21¾"	11"	8"	36	36'- 0"	36	36'- 0"	10	10'- 0"	6	8"	37' - 6"	6	8"	38' - 10"	4	8"	5' - 1"	9' - 10"	5	8"	3' - 4"	8' - 6"	11' - 5"	5	5½"	15' - 3"	4	10"	15' - 3"

A COPY OF THE ORIGINAL SEALED AND SIGNED DRAWING IS ON FILE IN THE CENTRAL OFFICE.

VDOT
ROAD AND BRIDGE STANDARDS

SHEET 1 OF 2 | REVISION DATE
1004.13 | 07/11

TRIPLE BOX CULVERTS

20 TO 30 FT. FILLS

VIRGINIA DEPARTMENT OF TRANSPORTATION

SPECIFICATION REFERENCE

FOR TYPICAL SECTION, NOTES AND OTHER DETAILS, REFER TO STANDARD BCT-DT.

BCT-30

SPAN	HGHT	REINFORCING STEEL BT1												REINFORCING STEEL (LBS/LONG. JT)	QUAN./LF		HEADWALLS G	HW1							WINGWALL
(FT.)	(FT.)	SIZE	SPACING c-c	a	b	c	d	e	f	g	LENGTH	NO. BL1 #4 BARS	NO. BL2 #3 BARS		CONCRETE CLASS A4 (CY/LF)	REINFORCING STEEL (LBS/LF)	HEADWALL LENGTH	SIZE	LENGTH	NO. HW2 BARS	NO. HW3 BARS	INLET CONCRETE CL. A4 (CY)	INLET REINFORCING STEEL (LBS)	OUTLET CONCRETE CL. A4 (CY)	OUTLET REINFORCING STEEL (LBS)	
3	3	4	12"	2'-7"	0'- 4"	1'-10"	0'- 5⅛"	0'- 3¼"	11'-3"	1'-3"	11'-9"	44	16	42.388	0.989	108.604	13'- 2"	6	12'-10"	2	8	1.827	102.932	1.808	77.103	A
3	4	4	12"	2'-7"	0'- 4"	1'-10"	0'- 5⅛"	0'- 3¼"	11'-3"	1'-3"	11'-9"	44	24	45.212	1.087	116.956	13'- 2"	6	12'-10"	2	10	1.932	109.835	1.901	77.103	C
4	3	4	12"	3'-4"	0'- 4½"	2'-3"	0'- 5⅞"	0'- 3¾"	14'-3"	1'-9"	14'-10"	56	16	52.408	1.181	129.180	16'- 2"	6	15'-10"	2	8	2.118	120.956	2.108	95.127	A
4	4	4	12"	3'-4"	0'- 4½"	2'-3"	0'- 5⅞"	0'- 3¾"	14'-3"	1'-9"	14'-10"	56	24	55.232	1.279	137.532	16'- 2"	6	15'-10"	2	10	2.223	127.859	2.201	95.127	C
4	5	4	12"	3'-4"	0'- 4½"	2'-3"	0'- 5⅞"	0'- 3¾"	14'-3"	1'-9"	14'-10"	56	32	58.056	1.377	145.884	16'- 2"	6	15'-10"	2	12	2.328	134.761	2.294	95.127	E
4	6	4	12"	3'-4"	0'- 4½"	2'-3"	0'- 5⅞"	0'- 3¾"	14'-3"	1'-9"	14'-10"	56	40	60.880	1.475	159.548	16'- 2"	6	15'-10"	2	14	2.433	141.664	2.387	95.127	G
5	3	4	12"	4'-0"	0'- 6"	2'-8"	0'- 8"	0'- 5¼"	17'-4"	2'-1"	18'-0"	68	16	62.428	1.500	158.051	19'- 2"	6	18'-10"	2	8	2.383	138.980	2.383	113.151	B
5	4	4	12"	4'-0"	0'- 6"	2'-8"	0'- 8"	0'- 5¼"	17'-4"	2'-1"	18'-0"	68	24	65.252	1.598	166.403	19'- 2"	6	18'-10"	2	10	2.488	145.883	2.476	113.151	D
5	5	4	12"	4'-0"	0'- 6¼"	2'-8"	0'- 8⅜"	0'- 5½"	17'-4"	2'-0"	18'-0"	68	32	68.076	1.723	175.587	19'- 2"	6	18'-10"	2	12	2.584	152.785	2.560	113.151	F
5	6	4	12"	4'-0"	0'- 6"	2'-8"	0'- 8"	0'- 5¼"	17'-4"	2'-1"	18'-0"	68	40	70.900	1.793	195.997	19'- 2"	6	18'-10"	2	14	2.698	159.688	2.662	113.151	H
5	7	4	12"	4'-0"	0'- 6"	2'-8"	0'- 8"	0'- 5¼"	17'-4"	2'-1"	18'-0"	68	48	73.724	1.891	206.168	19'- 2"	6	18'-10"	2	16	2.803	166.591	2.754	113.151	J
6	4	4	10"	4'-8"	0'- 8"	3'-0"	0'-10⅞"	0'- 7¼"	20'-4"	2'-5"	21'-3"	80	24	75.272	2.035	200.609	22'- 2"	6	21'-10"	2	10	2.684	163.907	2.683	131.175	D
6	5	4	10"	4'-8"	0'- 8⅛"	3'-0"	0'-11⅛"	0'- 7½"	20'-4"	2'-4"	21'-4"	80	32	78.096	2.165	209.517	22'- 2"	6	21'-10"	2	12	2.779	170.809	2.764	131.175	F
6	6	4	10"	4'-8"	0'- 8⅛"	3'-0"	0'-11⅛"	0'- 7½"	20'-4"	2'-4"	21'-4"	80	40	80.920	2.264	218.137	22'- 2"	6	21'-10"	2	14	2.884	177.712	2.857	131.175	H
6	7	4	10"	4'-9"	0'- 7½"	3'-0"	0'-10⅛"	0'- 6¾"	20'-4"	2'-6"	21'-3"	80	48	83.744	2.265	243.488	22'- 2"	6	21'-10"	2	16	3.022	184.615	2.983	131.175	J
6	8	4	10"	4'-8"	0'- 7¾"	3'-0"	0'-10½"	0'- 7"	20'-4"	2'-5"	21'-3"	80	56	86.568	2.394	262.965	22'- 2"	6	21'-10"	2	18	3.116	191.517	3.065	131.175	L
7	4	4	9"	5'-4"	0'- 9⅛"	3'-5"	1'- ⅝"	0'- 8½"	23'-4"	2'-9"	24'-5"	92	24	85.292	2.436	262.329	25'- 2"	6	24'-10"	2	10	2.884	181.931	2.892	149.199	D
7	6	4	9"	5'-4"	0'- 9⅛"	3'-5"	1'- ⅝"	0'- 8½"	23'-4"	2'-9"	24'-5"	92	40	90.940	2.632	279.924	25'- 2"	6	24'-10"	2	14	3.094	195.736	3.078	149.199	H
7	8	4	9"	5'-4"	0'- 9⅛"	3'-5"	1'- ⅝"	0'- 8½"	23'-4"	2'-9"	24'-5"	92	56	96.588	2.826	325.580	25'- 2"	6	24'-10"	2	18	3.305	209.541	3.263	149.199	L
7	10	4	9"	5'-6"	0'- 9⅛"	3'-5"	1'- ⅝"	0'- 8½"	23'-7"	2'-9"	24'-8"	92	72	102.236	3.132	384.973	25'- 2"	6	24'-10"	2	22	3.515	223.347	3.448	149.199	P
8	4	5	9"	6'-0"	0'-11"	3'-10"	1'- 3"	0'-10⅛"	26'-4"	3'-1"	27'-8"	104	24	95.312	2.963	345.960	28'- 2"	6	27'-10"	2	10	3.029	199.955	3.047	167.223	D
8	6	5	9"	6'-0"	0'-11"	3'-10"	1'- 3"	0'-10⅛"	26'-4"	3'-1"	27'-8"	104	40	100.960	3.159	363.554	28'- 2"	6	27'-10"	2	14	3.239	213.760	3.233	167.223	H
8	8	5	9"	6'-0"	0'-11"	3'-10"	1'- 3"	0'-10⅛"	26'-4"	3'-1"	27'-8"	104	56	106.608	3.353	408.729	28'- 2"	6	27'-10"	2	18	3.450	227.565	3.418	167.223	L
8	10	5	9"	6'-2"	0'-11"	3'-10"	1'- 3"	0'-10⅛"	26'-7"	3'-1"	27'-11"	104	72	112.256	3.661	471.397	28'- 2"	6	27'-10"	2	22	3.660	241.371	3.604	167.223	P
9	4	5	8"	6'-8"	1'- ½"	4'-3"	1'- 5⅛"	0'-11⅝"	29'-4"	3'-5"	30'-10"	116	24	105.332	3.510	414.630	31'- 2"	6	30'-10"	2	10	3.178	217.979	3.206	185.247	E
9	6	5	9"	6'-8"	1'- ½"	4'-3"	1'- 5⅛"	0'-11⅝"	29'-4"	3'-5"	30'-10"	116	40	110.980	3.709	398.624	31'- 2"	6	30'-10"	2	14	3.389	231.784	3.392	185.247	I
9	8	5	8"	6'-8"	1'- ½"	4'-3"	1'- 5⅛"	0'-11⅝"	29'-4"	3'-5"	30'-10"	116	56	116.628	3.900	480.975	31'- 2"	6	30'-10"	2	18	3.599	245.589	3.577	185.247	M
9	10	5	8"	6'-9"	1'- ½"	4'-3"	1'- 5⅛"	0'-11⅝"	29'-6"	3'-5"	31'-0"	116	72	122.276	4.171	546.825	31'- 2"	6	30'-10"	2	22	3.809	259.395	3.763	185.247	Q
9	12	6	9"	6'-11"	1'- ¾"	4'-3"	1'- 5¼"	0'-11¾"	29'-10"	3'-5"	31'-5"	116	88	127.924	4.597	702.070	31'- 2"	6	30'-10"	2	26	3.979	273.200	3.907	185.247	U
10	4	6	9"	7'-4"	1'- 2¼"	4'-8"	1'- 7⅜"	1'- 1¼"	32'-3"	3'-9"	34'-1"	128	24	115.352	4.159	539.178	34'- 2"	6	33'-10"	2	10	3.261	236.003	3.299	203.271	E
10	6	6	9"	7'-4"	1'- 2¼"	4'-8"	1'- 7⅜"	1'- 1¼"	32'-3"	3'-9"	34'-1"	128	40	121.000	4.355	557.259	34'- 2"	6	33'-10"	2	14	3.471	249.808	3.484	203.271	I
10	8	6	9"	7'-4"	1'- 2¼"	4'-8"	1'- 7⅜"	1'- 1¼"	32'-3"	3'-9"	34'-1"	128	56	126.648	4.549	604.709	34'- 2"	6	33'-10"	2	18	3.681	263.613	3.670	203.271	M
10	10	6	9"	7'-5"	1'- 2½"	4'-8"	1'- 7¾"	1'- 1½"	32'-6"	3'-9"	34'-3"	128	72	132.296	4.872	673.407	34'- 2"	6	33'-10"	2	22	3.871	277.419	3.835	203.271	Q
10	12	6	9"	7'-7"	1'- 2½"	4'-8"	1'- 7¾"	1'- 1½"	32'-9"	3'-9"	34'-7"	128	88	137.944	5.262	748.499	34'- 2"	6	33'-10"	2	26	4.036	291.224	3.974	203.271	U
12	6	6	8"	8'-9"	1'- 5½"	5'-5"	2'- 0"	1'- 4½"	38'-3"	4'-6"	40'-6"	152	40	141.040	5.794	714.963	40'- 2"	6	39'-10"	2	14	3.583	285.856	3.616	239.319	J
12	8	6	8"	8'-9"	1'- 5½"	5'-5"	2'- 0"	1'- 4½"	38'-3"	4'-6"	40'-6"	152	56	146.688	5.988	768.946	40'- 2"	6	39'-10"	2	18	3.793	299.661	3.801	239.319	N
12	10	6	8"	8'-9"	1'- 5½"	5'-5"	2'- 0"	1'- 4½"	38'-4"	4'-6"	40'-7"	152	72	152.336	6.222	839.825	40'- 2"	6	39'-10"	2	22	4.003	313.467	3.987	239.319	R
12	12	6	8"	8'-11"	1'- 5 ¾"	5'-5"	2'- ⅜"	1'- 4¾"	38'-9"	4'-5"	41'-1"	152	88	157.984	6.722	893.420	40'- 2"	6	39'-10"	2	26	4.141	327.272	4.099	239.319	V

A COPY OF THE ORIGINAL SEALED AND SIGNED DRAWING IS ON FILE IN THE CENTRAL OFFICE.

SPECIFICATION REFERENCE

TRIPLE BOX CULVERTS

20 TO 30 FT. FILLS

VIRGINIA DEPARTMENT OF TRANSPORTATION

VDOT

ROAD AND BRIDGE STANDARDS

REVISION DATE 07/11

SHEET 2 OF 2

1004.14

BCT-40

FOR TYPICAL SECTION, NOTES AND OTHER DETAILS, REFER TO STANDARD BCT-DT.

DIMENSIONS						REINFORCING STEEL																										
SPAN	HGHT	T1	T2	T3	T4							BH1			BH2			BH3				BH4					BV1			BV2		
(FT.)	(FT.)	TOP SLAB	BOTTOM SLAB	EXTERIOR WALL (IN.)	INTERIOR WALL (IN.)	A	B	C	D	E	F	SIZE	SPACING c-c	LENGTH	SIZE	SPACING c-c	LENGTH	SIZE	SPACING c-c	a	LENGTH	SIZE	SPACING c-c	a	b	LENGTH	SIZE	SPACING c-c	LENGTH	SIZE	SPACING c-c	LENGTH
3	3	8"	8"	8"	8"	9	9'- 0"	9	9'- 0"	1	1'- 0"	4	12"	10'-3"	4	12"	11'-4"	4	12"	2'- 2"	4'-0"	4	12"	2'-4"	2'-8"	4'-9"	4	12"	4'-0"	4	12"	4'-0"
3	4	8"	8"	8"	8"	9	9'- 0"	9	9'- 0"	2	2'- 0"	4	12"	10'-3"	4	12"	11'-4"	3	12"	2'- 4"	4'-5"	4	12"	2'-4"	3'-2"	5'-3"	4	12"	5'-0"	4	12"	5'-0"
4	3	9¾"	9¾"	8"	8"	12	12'- 0"	12	12'- 0"	1	1'- 0"	4	12"	13'-3"	4	12"	14'-4"	--	---	----	----	4	12"	2'-4"	2'-10"	4'-11"	4	12"	4'-3"	4	12"	4'-3"
4	4	9¾"	9¾"	8"	8"	12	12'- 0"	12	12'- 0"	2	2'- 0"	4	12"	13'-3"	4	12"	14'-4"	--	---	----	----	4	12"	2'-4"	3'-4"	5'-5"	4	12"	5'-3"	4	12"	5'-3"
4	5	9¾"	9¾"	8"	8"	12	12'- 0"	12	12'- 0"	3	3'- 0"	4	12"	13'-3"	4	12"	14'-4"	--	---	----	----	4	12"	2'-4"	3'-10"	5'-11"	4	12"	6'-3"	4	12"	6'-3"
4	6	9¾"	9¾"	8"	8"	12	12'- 0"	12	12'- 0"	4	4'- 0"	4	12"	13'-3"	4	12"	14'-4"	4	12"	2'-11"	5'-6"	4	12"	2'-4"	4'-4"	6'-5"	5	12"	7'-3"	4	12"	7'-3"
5	3	12"	12"	8"	8"	15	15'- 0"	15	15'- 0"	1	1'- 0"	4	11"	16'-4"	4	11"	17'-3"	--	---	----	----	4	11"	2'-4"	3'-0"	5'-1"	4	12"	4'-8"	4	12"	4'-8"
5	4	12"	12"	8"	8"	15	15'- 0"	15	15'- 0"	2	2'- 0"	4	11"	16'-4"	4	11"	17'-3"	--	---	----	----	4	11"	2'-4"	3'-6"	5'-7"	4	12"	5'-8"	4	12"	5'-8"
5	5	11¾"	11¾"	8"	8"	15	15'- 0"	15	15'- 0"	3	3'- 0"	4	10"	16'-4"	4	10"	17'-3"	--	---	----	----	4	10"	2'-4"	4'-0"	6'-1"	4	12"	6'-7"	4	12"	6'-7"
5	6	11¾"	11¾"	8"	8"	15	15'- 0"	15	15'- 0"	4	4'- 0"	4	10"	16'-4"	4	10"	17'-3"	--	---	----	----	4	10"	2'-4"	4'-6"	6'-7"	5	12"	7'-7"	4	12"	7'-7"
5	7	11¾"	11¾"	8"	8"	15	15'- 0"	15	15'- 0"	5	5'- 0"	4	10"	16'-0"	4	10"	17'-3"	--	---	----	----	5	10"	2'-6"	5'-2"	7'-3"	5	8½"	8'-7"	4	12"	8'-7"
6	4	14"	14"	8"	8"	18	18'- 0"	18	18'- 0"	2	2'- 0"	4	9"	19'-4"	4	9"	20'-3"	--	---	----	----	4	9"	2'-4"	3'-8"	5'-9"	4	12"	6'-0"	4	12"	6'-0"
6	5	14"	14"	8"	8"	18	18'- 0"	18	18'- 0"	3	3'- 0"	4	10"	19'-4"	5	10"	20'-3"	--	---	----	----	4	10"	2'-4"	4'-2"	6'-3"	4	12"	7'-0"	4	12"	7'-0"
6	6	14"	14"	8"	8"	18	18'- 0"	18	18'- 0"	4	4'- 0"	4	10"	19'-4"	5	10"	20'-3"	--	---	----	----	4	10"	2'-4"	4'-8"	6'-9"	5	12"	8'-0"	4	12"	8'-0"
6	7	13¾"	13¾"	8"	8"	18	18'- 0"	18	18'- 0"	5	5'- 0"	4	10"	19'-4"	5	10"	20'-3"	3	10"	3'-5"	6'-7"	4	10"	2'-4"	5'-2"	7'-3"	5	9"	8'-11"	4	12"	8'-11"
6	8	14"	14"	8½"	8"	18	18'- 0"	18	18'- 0"	6	6'- 0"	4	9"	19'-1"	4	9"	20'-5"	--	---	----	----	5	9"	2'-6"	5'-10"	8'-0"	6	9½"	10'-0"	4	12"	10'-0"
7	4	16"	16"	8"	8"	21	21'- 0"	21	21'- 0"	2	2'- 0"	5	9"	22'-4"	5	9"	23'-3"	--	---	----	----	4	9"	2'-9"	3'-10"	6'-4"	4	12"	6'-4"	4	12"	6'-4"
7	6	15¾"	15¾"	8"	8"	21	21'- 0"	21	21'- 0"	4	4'- 0"	5	9"	22'-4"	5	9"	23'-3"	--	---	----	----	4	9"	2'-9"	4'-10"	7'-4"	5	12"	8'-3"	4	12"	8'-3"
7	8	15¾"	15¾"	8"	8"	21	21'- 0"	21	21'- 0"	6	6'- 0"	5	9"	22'-4"	5	9"	23'-3"	4	9"	3'-9"	7'-3"	4	9"	2'-9"	5'-10"	8'-4"	5	6"	10'-3"	4	12"	10'-3"
7	10	15¾"	15¾"	10½"	8"	21	21'- 0"	21	21'- 0"	8	8'- 0"	5	9"	22'-5"	5	9"	23'-9"	3	9"	4'-2"	8'-2"	5	9"	2'-11"	7'-0"	9'-6"	6	6½"	12'-3"	4	12"	12'-3"
8	4	18½"	18½"	8"	8"	24	24'- 0"	24	24'- 0"	2	2'- 0"	5	8"	25'-4"	5	8"	26'-3"	--	---	----	----	4	8"	2'-9"	4'-1"	6'-6"	4	12"	6'-9"	4	10½"	6'-9"
8	6	18"	18"	8"	8"	24	24'- 0"	24	24'- 0"	4	4'- 0"	5	8"	25'-4"	5	8"	26'-3"	--	---	----	----	4	8"	2'-9"	5'-0"	7'-6"	5	12"	8'-7"	4	10½"	8'-7"
8	8	18"	18"	8"	8"	24	24'- 0"	24	24'- 0"	6	6'- 0"	5	8"	25'-4"	5	8"	26'-3"	3	8"	4'-0"	7'-9"	4	8"	2'-9"	6'-0"	8'-6"	5	6"	10'-7"	4	10½"	10'-7"
8	10	18"	18"	10½"	8"	24	24'- 0"	24	24'- 0"	8	8'- 0"	5	8"	25'-5"	5	8"	26'-9"	3	8"	4'-4"	8'-6"	5	8"	2'-11"	7'-2"	9'-9"	6	9"	12'-7"	4	10½"	12'-7"
9	4	20"	20"	8"	8"	27	27'- 0"	27	27'- 0"	2	2'- 0"	6	9"	28'-4"	6	9"	29'-3"	--	---	----	----	4	9"	3'-2"	4'-2"	7'-1"	4	12"	7'-0"	4	10"	7'-0"
9	6	20"	20"	8"	8"	27	27'- 0"	27	27'- 0"	4	4'- 0"	6	9"	28'-4"	6	9"	29'-3"	--	---	----	----	4	9"	3'-2"	5'-2"	8'-1"	5	12"	9'-0"	4	10"	9'-0"
9	8	19¾"	19¾"	8"	8"	27	27'- 0"	27	27'- 0"	6	6'- 0"	6	9"	28'-0"	6	9"	29'-3"	--	---	----	----	5	9"	3'-4"	6'-4"	9'-3"	5	6"	10'-11"	4	10"	10'-11"
9	10	20"	20"	10½"	8"	27	27'- 0"	27	27'- 0"	8	8'- 0"	6	9"	28'-2"	6	9"	29'-9"	--	---	----	----	6	9"	3'-5"	7'-6"	10'-6"	6	9"	13'-0"	4	10"	13'-0"
9	12	19¾"	19¾"	12½"	8"	27	27'- 0"	27	27'- 0"	10	10'- 0"	6	9"	28'-3"	6	9"	30'-0"	--	---	----	----	7	9"	3'-7"	8'-9"	11'-10"	6	5½"	14'-11"	4	10"	14'-11"
10	4	22"	22"	8"	8"	30	30'- 0"	30	30'- 0"	2	2'- 0"	6	9"	31'-3"	6	9"	32'-3"	--	---	----	----	4	9"	3'-2"	4'-5"	7'-3"	4	12"	7'-4"	4	10"	7'-4"
10	6	22"	22"	8"	8"	30	30'- 0"	30	30'- 0"	4	4'- 0"	6	9"	31'-3"	6	9"	32'-3"	--	---	----	----	4	9"	3'-2"	5'-5"	8'-3"	5	12"	9'-3"	4	10"	9'-3"
10	8	22"	22"	8"	8"	30	30'- 0"	30	30'- 0"	6	6'- 0"	6	9"	31'-0"	6	9"	32'-3"	--	---	----	----	5	9"	3'-4"	6'-6"	9'-6"	5	6"	11'-3"	4	10"	11'-3"
10	10	22"	22"	10"	8"	30	30'- 0"	30	30'- 0"	8	8'- 0"	7	9"	31'-1"	6	9"	32'-7"	--	---	----	----	6	9"	4'-1"	7'-8"	11'-4"	4	4"	13'-3"	4	10"	13'-3"
10	12	22¼"	22¼"	12½"	8"	30	30'- 0"	30	30'- 0"	10	10'- 0"	6	9"	31'-6"	6	9"	33'-0"	3	9"	5'-2"	10'-0"	6	9"	3'-5"	8'-9"	11'-9"	6	7½"	15'-4"	4	10"	15'-4"
12	6	26½"	26½"	8"	8"	36	36'- 0"	36	36'- 0"	4	4'- 0"	6	8"	37'-3"	6	8"	38'-4"	--	---	----	----	4	8"	3'-2"	5'-9"	8'-7"	5	12"	10'-1"	4	9½"	10'-1"
12	8	26½"	26½"	8"	8"	36	36'- 0"	36	36'- 0"	6	6'- 0"	6	8"	37'-3"	6	8"	38'-4"	3	8"	4'-8"	9'-2"	4	8"	3'-2"	6'-9"	9'-7"	6	9"	12'-1"	4	9½"	12'-1"
12	10	26½"	26½"	9"	8"	36	36'- 0"	36	36'- 0"	8	8'- 0"	6	8"	37'-2"	6	8"	38'-6"	3	8"	5'-1"	9'-11"	5	8"	3'-4"	7'-11"	10'-10"	8	11½"	14'-1"	4	9½"	14'-1"
12	12	26½"	26½"	12"	8"	36	36'- 0"	36	36'- 0"	10	10'- 0"	6	8"	37'-8"	6	8"	39'-0"	4	8"	5'-6"	10'-8"	5	8"	3'-4"	8'-11"	11'-10"	7	10"	16'-1"	4	9"	16'-1"

A COPY OF THE ORIGINAL SEALED AND SIGNED DRAWING IS ON FILE IN THE CENTRAL OFFICE

VDOT
ROAD AND BRIDGE STANDARDS

SHEET 1 OF 2 | REVISION DATE
1004.15 | 07/11

TRIPLE BOX CULVERTS

30 TO 40 FT. FILLS

VIRGINIA DEPARTMENT OF TRANSPORTATION

SPECIFICATION REFERENCE

FOR TYPICAL SECTION, NOTES AND OTHER DETAILS, REFER TO STANDARD BCT-DT.

BCT-40

SPAN	HGHT	REINFORCING STEEL BT1												REINFORCING STEEL (LBS/LONG. JT)	QUAN./LF		HEADWALLS								WINGWALL
																	G	HW1							
(FT.)	(FT.)	SIZE	SPACING c-c	a	b	c	d	e	f	g	LENGTH	NO. BL1 #4 BARS	NO. BL2 #3 BARS		CONCRETE CLASS A4 (CY/LF)	REINFORCING STEEL (LBS/LF)	HEADWALL LENGTH	SIZE	LENGTH	NO. HW2 BARS	NO. HW3 BARS	INLET CONCRETE CL. A4 (CY)	INLET REINFORCING STEEL (LBS)	OUTLET CONCRETE CL. A4 (CY)	OUTLET REINFORCING STEEL (LBS)	
3	3	4	12"	2'-7"	0'- 4"	1'-10"	0'- 5 1/8"	0'- 3 1/4"	11'-3"	1'-3"	11'-9"	44	16	42.388	0.988	119.117	13'- 2"	6	12'-10"	2	8	1.827	102.932	1.808	77.103	A
3	4	4	12"	2'-7"	0'- 4"	1'-10"	0'- 5 1/8"	0'- 3 1/4"	11'-3"	1'-3"	11'-9"	44	24	45.212	1.087	123.575	13'- 2"	6	12'-10"	2	10	1.932	109.835	1.901	77.103	C
4	3	4	12"	3'-3"	0'- 5 3/4"	2'-3"	0'- 7 5/8"	0'- 5"	14'-3"	1'-6"	15'-0"	56	16	52.408	1.294	130.522	16'- 2"	6	15'-10"	2	8	2.104	120.956	2.095	95.127	B
4	4	4	12"	3'-3"	0'- 5 3/4"	2'-3"	0'- 7 5/8"	0'- 5"	14'-3"	1'-6"	15'-0"	56	24	55.232	1.392	138.874	16'- 2"	6	15'-10"	2	10	2.209	127.859	2.188	95.127	D
4	5	4	12"	3'-3"	0'- 5 3/4"	2'-3"	0'- 7 5/8"	0'- 5"	14'-3"	1'-6"	15'-0"	56	32	58.056	1.490	147.226	16'- 2"	6	15'-10"	2	12	2.315	134.761	2.280	95.127	F
4	6	4	12"	3'-3"	0'- 5 3/4"	2'-3"	0'- 7 5/8"	0'- 5"	14'-3"	1'-6"	15'-0"	56	40	60.880	1.587	175.546	16'- 2"	6	15'-10"	2	14	2.420	141.664	2.373	95.127	H
5	3	4	11"	3'-10"	0'- 8"	2'-8"	0'- 10 7/8"	0'- 7 1/4"	17'-4"	1'-9"	18'-3"	68	16	62.428	1.718	160.509	19'- 2"	6	18'-10"	2	8	2.313	138.980	2.313	113.151	B
5	4	4	11"	3'-10"	0'- 8"	2'-8"	0'- 10 7/8"	0'- 7 1/4"	17'-4"	1'-9"	18'-3"	68	24	65.252	1.816	168.982	19'- 2"	6	18'-10"	2	10	2.418	145.883	2.406	113.151	D
5	5	4	10"	3'-10"	0'- 7 3/4"	2'-8"	0'- 10 1/2"	0'- 7"	17'-4"	1'-9"	18'-3"	68	32	68.076	1.886	186.495	19'- 2"	6	18'-10"	2	12	2.532	152.785	2.508	113.151	F
5	6	4	10"	3'-10"	0'- 7 3/4"	2'-8"	0'- 10 1/2"	0'- 7"	17'-4"	1'-9"	18'-3"	68	40	70.900	1.984	200.833	19'- 2"	6	18'-10"	2	14	2.637	159.688	2.600	113.151	H
5	7	4	10"	3'-10"	0'- 7 3/4"	2'-8"	0'- 10 1/2"	0'- 7"	17'-4"	1'-9"	18'-3"	68	48	73.724	2.080	230.967	19'- 2"	6	18'-10"	2	16	2.742	166.591	2.693	113.151	J
6	4	4	9"	4'-6"	0'-10"	3'-0"	1'- 1 5/8"	0'- 9 1/4"	20'-4"	2'-1"	21'-7"	80	24	75.272	2.289	215.855	22'- 2"	6	21'-10"	2	10	2.607	163.907	2.605	131.175	D
6	5	4	10"	4'-6"	0'-10"	3'-0"	1'- 1 5/8"	0'- 9 1/4"	20'-4"	2'-1"	21'-7"	80	32	78.096	2.387	229.840	22'- 2"	6	21'-10"	2	12	2.712	170.809	2.698	131.175	F
6	6	4	10"	4'-6"	0'-10"	3'-0"	1'- 1 5/8"	0'- 9 1/4"	20'-4"	2'-1"	21'-7"	80	40	80.920	2.485	244.460	22'- 2"	6	21'-10"	2	14	2.817	177.712	2.791	131.175	H
6	7	4	10"	4'-6"	0'-9 3/4 "	3'-0"	1'- 1 1/4"	0'- 9"	20'-4"	2'-1"	21'-6"	80	48	83.744	2.550	271.576	22'- 2"	6	21'-10"	2	16	2.922	184.615	2.883	131.175	J
6	8	4	9"	4'-7"	0'-10"	3'-0"	1'- 1 5/8"	0'- 9 1/4"	20'-5"	2'-1"	21'-8"	80	56	86.568	2.711	292.291	22'- 2"	6	21'-10"	2	18	3.039	191.517	2.987	131.175	L
7	4	5	9"	5'-2"	1'- 0"	3'-5"	1'- 4 3/8"	0'-11 1/8"	23'-4"	2'-4"	24'-10"	92	24	85.292	2.833	314.260	25'- 2"	6	24'-10"	2	10	2.769	181.931	2.777	149.199	E
7	6	5	9"	5'-2"	0'-11 3/4"	3'-5"	1'- 4"	0'-10 7/8"	23'-4"	2'-5"	24'-9"	92	40	90.940	2.993	337.736	25'- 2"	6	24'-10"	2	14	2.979	195.736	2.962	149.199	I
7	8	5	9"	5'-2"	0'-11 3/4"	3'-5"	1'- 4"	0'-10 7/8"	23'-4"	2'-5"	24'-9"	92	56	96.588	3.185	404.045	25'- 2"	6	24'-10"	2	18	3.189	209.541	3.148	149.199	M
7	10	5	9"	5'-5"	0'-11 3/4"	3'-5"	1'- 4"	0'-10 7/8"	23'-9"	2'-5"	25'-2"	92	72	102.236	3.573	457.227	25'- 2"	6	24'-10"	2	22	3.361	223.347	3.294	149.199	Q
8	4	5	8"	5'-9"	1'- 2 1/2"	3'-10"	1'- 7 7/8"	1'- 1 5/8"	26'-4"	2'-6"	28'-2"	104	24	95.312	3.536	383.895	28'- 2"	6	27'-10"	2	10	2.875	199.955	2.893	167.223	E
8	6	5	8"	5'-9"	1'- 2"	3'-10"	1'- 7 1/8"	1'- 1 1/8"	26'-4"	2'-7"	28'-1"	104	40	100.960	3.649	408.450	28'- 2"	6	27'-10"	2	14	3.085	213.760	3.079	167.223	I
8	8	5	8"	5'-9"	1'- 2"	3'-10"	1'- 7 1/8"	1'- 1 1/8"	26'-4"	2'-7"	28'-1"	104	56	106.608	3.842	468.303	28'- 2"	6	27'-10"	2	18	3.280	227.565	3.248	167.223	M
8	10	5	8"	6'-0"	1'- 2"	3'-10"	1'- 7 1/8"	1'- 1 1/8"	26'-9"	2'-7"	28'-6"	104	72	112.256	4.236	518.258	28'- 2"	6	27'-10"	2	22	3.451	241.371	3.394	167.223	Q
9	4	6	9"	6'-5"	1'- 4"	4'-3"	1'- 9 7/8"	1'- 3"	29'-4"	2'-11"	31'-4"	116	24	105.332	4.144	499.880	31'- 2"	6	30'-10"	2	10	2.944	217.979	2.972	185.247	E
9	6	6	9"	6'-5"	1'- 4"	4'-3"	1'- 9 7/8"	1'- 3"	29'-4"	2'-11"	31'-4"	116	40	110.980	4.340	525.293	31'- 2"	6	30'-10"	2	14	3.155	231.784	3.158	185.247	I
9	8	6	9"	6'-5"	1'- 3 3/4"	4'-3"	1'- 9 1/2"	1'- 2 3/4"	29'-4"	2'-11"	31'-4"	116	56	116.628	4.487	586.121	31'- 2"	6	30'-10"	2	18	3.365	245.589	3.343	185.247	M
9	10	6	9"	6'-8"	1'- 4"	4'-3"	1'- 9 7/8"	1'- 3"	29'-9"	2'-11"	31'-9"	116	72	122.276	4.932	641.784	31'- 2"	6	30'-10"	2	22	3.553	259.395	3.506	185.247	Q
9	12	6	9"	6'-10"	1'- 3 3/4"	4'-3"	1'- 9 1/2"	1'- 2 3/4"	30'-1"	2'-11"	32'-1"	116	88	127.924	5.294	747.331	31'- 2"	6	30'-10"	2	26	3.598	273.200	3.525	185.247	U
10	4	6	9"	7'-1"	1'- 6"	4'-8"	2'- 3/4"	1'- 5"	32'-3"	3'-2"	34'-7"	128	24	115.352	4.914	547.156	34'- 2"	6	33'-10"	2	10	2.975	236.003	3.013	203.271	F
10	6	6	9"	7'-1"	1'- 6"	4'-8"	2'- 3/4"	1'- 5"	32'-3"	3'-2"	34'-7"	128	40	121.000	5.110	572.819	34'- 2"	6	33'-10"	2	14	3.185	249.808	3.198	203.271	J
10	8	6	9"	7'-1"	1'- 6"	4'-8"	2'- 3/4"	1'- 5"	32'-3"	3'-2"	34'-7"	128	56	126.648	5.302	635.237	34'- 2"	6	33'-10"	2	18	3.395	263.613	3.384	203.271	N
10	10	7	9"	7'-3"	1'- 6"	4'-8"	2'- 5/8"	1'- 4 3/4"	32'-7"	3'-2"	34'-11"	128	72	132.296	5.657	790.481	34'- 2"	6	33'-10"	2	22	3.564	277.419	3.527	203.271	R
10	12	6	9"	7'-5"	1'- 6 1/4"	4'-8"	2'- 1 1/8"	1'- 5 1/4"	33'-0"	3'-1"	35'-5"	128	88	137.944	6.175	756.073	34'- 2"	6	33'-10"	2	26	3.603	291.224	3.540	203.271	V
12	6	6	8"	8'-4"	1'-10 1/2"	5'-5"	2'- 7 1/8"	1'- 9 1/2"	38'-3"	3'-8"	41'-3"	152	40	141.040	6.986	732.789	40'- 2"	6	39'-10"	2	14	3.184	285.856	3.217	239.319	J
12	8	6	8"	8'-4"	1'-10 1/2"	5'-5"	2'- 7 1/8"	1'- 9 1/2"	38'-3"	3'-8"	41'-3"	152	56	146.688	7.179	797.422	40'- 2"	6	39'-10"	2	18	3.394	299.661	3.402	239.319	N
12	10	6	8"	8'-5"	1'-10 1/2"	5'-5"	2'- 7 1/8"	1'- 9 1/2"	38'-6"	3'-8"	41'-5"	152	72	152.336	7.460	872.364	40'- 2"	6	39'-10"	2	22	3.535	313.467	3.518	239.319	R
12	12	6	8"	8'-8"	1'-10 1/2"	5'-5"	2'- 7 1/8"	1'- 9 1/2"	39'-0"	3'-8"	41'-11"	152	88	157.984	7.970	921.845	40'- 2"	6	39'-10"	2	26	3.590	327.272	3.547	239.319	V

A COPY OF THE ORIGINAL SEALED AND SIGNED DRAWING IS ON FILE IN THE CENTRAL OFFICE.

SPECIFICATION REFERENCE

TRIPLE BOX CULVERTS

30 TO 40 FT. FILLS

VIRGINIA DEPARTMENT OF TRANSPORTATION

VDOT

ROAD AND BRIDGE STANDARDS

REVISION DATE 08/14

SHEET 2 OF 2

1004.16

BCT-50

FOR TYPICAL SECTION, NOTES AND OTHER DETAILS, REFER TO STANDARD BCT-DT.

DIMENSIONS						REINFORCING STEEL																										
SPAN	HGHT	T1	T2	T3	T4							BH1			BH2			BH3				BH4					BV1			BV2		
(FT.)	(FT.)	TOP SLAB	BOTTOM SLAB	EXTERIOR WALL (IN.)	INTERIOR WALL (IN.)	A	B	C	D	E	F	SIZE	SPACING c-c	LENGTH	SIZE	SPACING c-c	LENGTH	SIZE	SPACING c-c	a	LENGTH	SIZE	SPACING c-c	a	b	LENGTH	SIZE	SPACING c-c	LENGTH	SIZE	SPACING c-c	LENGTH
3	3	9"	9"	8"	8"	9	9'- 0"	9	9'- 0"	1	1'- 0"	4	12"	10'-3"	4	12"	11'-4"	--	---	----	----	4	12"	2'-4"	2'-9"	4'-10"	4	12"	4'-2"	4	12"	4'-2"
3	4	9"	9"	8"	8"	9	9'- 0"	9	9'- 0"	2	2'- 0"	4	12"	10'-3"	4	12"	11'-4"	--	---	----	----	4	12"	2'-4"	3'-3"	5'-4"	4	12"	5'-2"	4	12"	5'-2"
4	3	11"	11"	8"	8"	12	12'- 0"	12	12'- 0"	1	1'- 0"	4	12"	13'-3"	4	12"	14'-4"	--	---	----	----	4	12"	2'-4"	2'-11"	5'-0"	4	12"	4'-6"	4	12"	4'-6"
4	4	11¼"	11¼"	8"	8"	12	12'- 0"	12	12'- 0"	2	2'- 0"	4	12"	13'-3"	4	12"	14'-4"	--	---	----	----	4	12"	2'-4"	3'-6"	5'-6"	4	12"	5'-6"	4	12"	5'-6"
4	5	11"	11"	8"	8"	12	12'- 0"	12	12'- 0"	3	3'- 0"	4	12"	13'-3"	4	12"	14'-4"	--	---	----	----	4	12"	2'-4"	3'-11"	6'-0"	5	12"	6'-6"	4	12"	6'-6"
4	6	11¼"	11¼"	8"	8"	12	12'- 0"	12	12'- 0"	4	4'- 0"	4	12"	13'-3"	4	12"	14'-4"	4	12"	3'-0"	5'-9"	4	12"	2'-4"	4'-6"	6'-6"	5	9"	7'-6"	4	12"	7'-6"
5	3	13½"	13½"	8"	8"	15	15'- 0"	15	15'- 0"	1	1'- 0"	4	9"	16'-4"	4	9"	17'-3"	--	---	----	----	4	9"	2'-4"	3'-2"	5'-2"	4	12"	4'-11"	4	12"	4'-11"
5	4	13½"	13½"	8"	8"	15	15'- 0"	15	15'- 0"	2	2'- 0"	4	9"	16'-4"	4	9"	17'-3"	--	---	----	----	4	9"	2'-4"	3'-8"	5'-8"	4	12"	5'-11"	4	12"	5'-11"
5	5	13½"	13½"	8"	8"	15	15'- 0"	15	15'- 0"	3	3'- 0"	4	9"	16'-4"	4	9"	17'-3"	--	---	----	----	4	9"	2'-4"	4'-2"	6'-2"	5	12"	6'-11"	4	12"	6'-11"
5	6	13½"	13½"	8"	8"	15	15'- 0"	15	15'- 0"	4	4'- 0"	4	9"	16'-4"	4	9"	17'-3"	--	---	----	----	4	9"	2'-4"	4'-8"	6'-8"	5	9½"	7'-11"	4	12"	7'-11"
5	7	13½"	13½"	8½"	8"	15	15'- 0"	15	15'- 0"	5	5'- 0"	4	10"	16'-1"	4	10"	17'-5"	--	---	----	----	5	10"	2'-6"	5'-4"	7'-5"	6	10½"	8'-11"	4	12"	8'-11"
6	4	16½"	16½"	8"	8"	18	18'- 0"	18	18'- 0"	2	2'- 0"	4	9"	19'-4"	5	9"	20'-3"	--	---	----	----	4	9"	2'-4"	3'-11"	5'-11"	4	12"	6'-5"	4	11"	6'-5"
6	5	16"	16"	8"	8"	18	18'- 0"	18	18'- 0"	3	3'- 0"	4	9"	19'-4"	5	9"	20'-3"	--	---	----	----	4	9"	2'-4"	4'-4"	6'-5"	5	12"	7'-4"	4	11"	7'-4"
6	6	16"	16"	8"	8"	18	18'- 0"	18	18'- 0"	4	4'- 0"	4	9"	19'-4"	5	9"	20'-3"	--	---	----	----	4	9"	2'-4"	4'-10"	6'-11"	5	10"	8'-3"	4	11½"	8'-3"
6	7	16"	16"	8"	8"	18	18'- 0"	18	18'- 0"	5	5'- 0"	4	9"	19'-4"	5	9"	20'-3"	3	9"	3'-7"	7'-0"	4	9"	2'-4"	5'-4"	7'-5"	6	10½"	9'-3"	4	11½"	9'-3"
6	8	16"	16"	9½"	8"	18	18'- 0"	18	18'- 0"	6	6'- 0"	4	9"	19'-3"	5	9"	20'-6"	--	---	----	----	5	9"	2'-6"	6'-0"	8'-2"	5	5"	10'-3"	4	11½"	10'-3"
7	4	18½"	18½"	8"	8"	21	21'- 0"	21	21'- 0"	2	2'- 0"	5	9"	22'-4"	5	9"	23'-3"	--	---	----	----	4	9"	2'-9"	4'-1"	6'-6"	4	12"	6'-9"	4	10"	6'-9"
7	6	18½"	18½"	8"	8"	21	21'- 0"	21	21'- 0"	4	4'- 0"	5	9"	22'-4"	5	9"	23'-3"	--	---	----	----	4	9"	2'-9"	5'-1"	7'-6"	5	9½"	8'-9"	4	10"	8'-9"
7	8	18"	18"	9½"	8"	21	21'- 0"	21	21'- 0"	6	6'- 0"	5	9"	22'-3"	5	9"	23'-6"	--	---	----	----	5	9"	2'-11"	6'-2"	8'-9"	5	7½"	10'-7"	4	10"	10'-7"
7	10	18"	18"	11½"	8"	21	21'- 0"	21	21'- 0"	8	8'- 0"	5	9"	22'-7"	5	9"	23'-11"	4	9"	4'-4"	8'-5"	5	9"	2'-11"	7'-2"	9'-9"	7	9"	12'-7"	4	10"	12'-7"
8	4	21"	21"	8"	8"	24	24'- 0"	24	24'- 0"	2	2'- 0"	6	9"	25'-4"	6	9"	26'-3"	--	---	----	----	4	9"	3'-2"	4'-3"	7'-2"	4	12"	7'-2"	4	10"	7'-2"
8	6	21"	21"	8"	8"	24	24'- 0"	24	24'- 0"	4	4'- 0"	5	8"	25'-4"	5	8"	26'-3"	--	---	----	----	4	8"	2'-9"	5'-3"	7'-9"	5	9"	9'-1"	4	10"	9'-1"
8	8	20½"	20½"	8½"	8"	24	24'- 0"	24	24'- 0"	6	6'- 0"	5	8"	25'-5"	5	8"	26'-5"	3	8"	4'-2"	8'-2"	4	8"	2'-9"	6'-3"	8'-8"	6	7½"	11'-0"	4	10"	11'-0"
8	10	20½"	20½"	11½"	8"	24	24'- 0"	24	24'- 0"	8	8'- 0"	5	8"	25'-7"	5	8"	26'-11"	3	8"	4'-7"	8'-11"	5	8"	2'-11"	7'-5"	9'-11"	7	9"	13'-0"	4	10"	13'-0"
9	4	23"	23"	8"	8"	27	27'- 0"	27	27'- 0"	2	2'- 0"	6	9"	28'-4"	6	9"	29'-3"	--	---	----	----	4	9"	3'-2"	4'-5"	7'-4"	4	12"	7'-6"	4	10"	7'-6"
9	6	23"	23"	8"	8"	27	27'- 0"	27	27'- 0"	4	4'- 0"	6	9"	28'-4"	6	9"	29'-3"	--	---	----	----	4	9"	3'-2"	5'-5"	8'-4"	5	8½"	9'-6"	4	10"	9'-6"
9	8	23"	23"	8½"	8"	27	27'- 0"	27	27'- 0"	6	6'- 0"	6	9"	28'-1"	6	9"	29'-5"	--	---	----	----	5	9"	3'-4"	6'-8"	9'-7"	5	4½"	11'-6"	4	10"	11'-6"
9	10	23"	23"	11½"	8"	27	27'- 0"	27	27'- 0"	8	8'- 0"	6	9"	28'-4"	6	9"	29'-11"	--	---	----	----	6	9"	3'-5"	7'-9"	10'-9"	5	4"	13'-6"	4	10"	13'-6"
9	12	23"	23"	14"	8"	27	27'- 0"	27	27'- 0"	10	10'- 0"	6	9"	28'-6"	6	9"	30'-3"	3	9"	5'-2"	10'-2"	7	9"	3'-7"	9'-0"	12'-1"	6	7"	15'-6"	4	9½"	15'-6"
10	4	26"	26"	8"	8"	30	30'- 0"	30	30'- 0"	2	2'- 0"	6	9"	31'-3"	6	9"	32'-3"	--	---	----	----	4	9"	3'-2"	4'-8"	7'-7"	4	12"	8'-0"	4	9"	8'-0"
10	6	25½"	25½"	8"	8"	30	30'- 0"	30	30'- 0"	4	4'- 0"	6	9"	31'-3"	6	9"	32'-3"	--	---	----	----	4	9"	3'-2"	5'-8"	8'-6"	5	8"	9'-11"	4	9"	9'-11"
10	8	25½"	25½"	8"	8"	30	30'- 0"	30	30'- 0"	6	6'- 0"	6	9"	31'-3"	6	9"	32'-3"	3	9"	4'-7"	9'-0"	4	9"	3'-2"	6'-8"	9'-6"	5	4½"	11'-11"	4	9"	11'-11"
10	10	25½"	25½"	11"	8"	30	30'- 0"	30	30'- 0"	8	8'- 0"	6	9"	31'-6"	6	9"	32'-9"	3	9"	5'-0"	9'-9"	5	9"	3'-4"	7'-10"	10'-9"	6	6"	13'-11"	4	9"	13'-11"
10	12	25½"	25½"	14"	8"	30	30'- 0"	30	30'- 0"	10	10'- 0"	6	9"	31'-9"	6	9"	33'-3"	3	9"	5'-5"	10'-7"	6	9"	3'-5"	9'-0"	12'-0"	8	9½"	15'-11"	4	9"	15'-11"
12	6	30½"	30½"	8"	8"	36	36'- 0"	36	36'- 0"	4	4'- 0"	7	9"	37'-3"	7	9"	38'-4"	--	---	----	----	4	9"	3'-10"	6'-1"	9'-7"	5	7½"	10'-8"	4	12"	10'-8"
12	8	30½"	30½"	8"	8"	36	36'- 0"	36	36'- 0"	6	6'- 0"	7	9"	37'-3"	7	9"	38'-4"	3	9"	5'-0"	9'-10"	4	9"	3'-10"	7'-1"	10'-7"	7	9½"	12'-8"	4	12"	12'-8"
12	10	30½"	30½"	9¾"	8"	36	36'- 0"	36	36'- 0"	8	8'- 0"	7	8"	37'-4"	7	8"	38'-7"	3	8"	5'-5"	10'-7"	5	8"	4'-0"	8'-3"	11'-10"	7	8"	14'-8"	4	7½"	14'-8"
12	12	30½"	30½"	13"	8"	36	36'- 0"	36	36'- 0"	10	10'- 0"	7	8"	37'-7"	7	8"	39'-1"	3	8"	5'-10"	11'-5"	6	8"	4'-1"	9'-5"	13'-1"	8	9½"	16'-9"	4	7½"	16'-9"

A COPY OF THE ORIGINAL SEALED AND SIGNED DRAWING IS ON FILE IN THE CENTRAL OFFICE

VDOT
ROAD AND BRIDGE STANDARDS

SHEET 1 OF 2 | REVISION DATE
1004.17 | 07/11

TRIPLE BOX CULVERTS

40 TO 50 FT. FILLS

VIRGINIA DEPARTMENT OF TRANSPORTATION

SPECIFICATION REFERENCE

FOR TYPICAL SECTION, NOTES AND OTHER DETAILS, REFER TO STANDARD BCT-DT.

BCT-50

		REINFORCING STEEL													QUAN./LF		HEADWALLS									
SPAN	HGHT	BT1															G	HW1								
(FT.)	(FT.)	SIZE	SPACING c-c	a	b	c	d	e	f	g	LENGTH	NO. BL1 #4 BARS	NO. BL2 #3 BARS	REINFORCING STEEL (LBS/LONG. JT)	CONCRETE CLASS A4 (CY/LF)	REINFORCING STEEL (LBS/LF)	HEADWALL LENGTH	SIZE	LENGTH	NO. HW2 BARS	NO. HW3 BARS	INLET CONCRETE CL. A4 (CY)	INLET REINFORCING STEEL (LBS)	OUTLET CONCRETE CL. A4 (CY)	OUTLET REINFORCING STEEL (LBS)	WINGWALL
3	3	4	12"	2'-6"	0'- 5"	1'-10"	0'- 6⅝"	0'- 4¼"	11'-3"	1'-1"	11'-10"	44	16	42.388	1.061	109.676	13'- 2"	6	12'-10"	2	8	1.811	102.932	1.791	77.103	A
3	4	4	12"	2'-6"	0'- 5"	1'-10"	0'- 6⅝"	0'- 4¼"	11'-3"	1'-1"	11'-10"	44	24	45.212	1.159	118.028	13'- 2"	6	12'-10"	2	10	1.916	109.835	1.884	77.103	C
4	3	4	12"	3'-2"	0'- 7"	2'-3"	0'- 9⅜"	0'- 6¼"	14'-3"	1'-4"	15'-2"	56	16	52.408	1.407	131.864	16'- 2"	6	15'-10"	2	8	2.072	120.956	2.063	95.127	B
4	4	4	12"	3'-1"	0'- 7¼"	2'-3"	0'- 9¾"	0'- 6½"	14'-3"	1'-3"	15'-2"	56	24	55.232	1.528	140.485	16'- 2"	6	15'-10"	2	10	2.171	127.859	2.149	95.127	D
4	5	4	12"	3'-2"	0'- 7"	2'-3"	0'- 9⅜"	0'- 6¼"	14'-3"	1'-4"	15'-2"	56	32	58.056	1.603	153.443	16'- 2"	6	15'-10"	2	12	2.282	134.761	2.248	95.127	F
4	6	4	12"	3'-1"	0'- 7¼"	2'-3"	0'- 9¾"	0'- 6½"	14'-3"	1'-3"	15'-2"	56	40	60.880	1.722	183.256	16'- 2"	6	15'-10"	2	14	2.381	141.664	2.334	95.127	H
5	3	4	9"	3'-9"	0'- 9½"	2'-8"	1'- 1"	0'- 8¾"	17'-4"	1'-6"	18'-6"	68	16	62.428	1.879	182.405	19'- 2"	6	18'-10"	2	8	2.269	138.980	2.270	113.151	B
5	4	4	9"	3'-9"	0'- 9½"	2'-8"	1'- 1"	0'- 8¾"	17'-4"	1'-6"	18'-6"	68	24	65.252	1.978	191.202	19'- 2"	6	18'-10"	2	10	2.374	145.883	2.362	113.151	D
5	5	4	9"	3'-9"	0'- 9½"	2'-8"	1'- 1"	0'- 8¾"	17'-4"	1'-6"	18'-6"	68	32	68.076	2.075	205.187	19'- 2"	6	18'-10"	2	12	2.471	152.785	2.446	113.151	F
5	6	4	9"	3'-9"	0'- 9½"	2'-8"	1'- 1"	0'- 8¾"	17'-4"	1'-6"	18'-6"	68	40	70.900	2.173	219.080	19'- 2"	6	18'-10"	2	14	2.576	159.688	2.539	113.151	H
5	7	4	10"	3'-9"	0'- 9½"	2'-8"	1'- 1"	0'- 8¾"	17'-5"	1'-6"	18'-7"	68	48	73.724	2.299	238.475	19'- 2"	6	18'-10"	2	16	2.681	166.591	2.632	113.151	J
6	4	4	9"	4'-4"	1'- ½"	3'-0"	1'- 5⅛"	0'-11¾"	20'-4"	1'-8"	21'-11"	80	24	75.272	2.606	240.773	22'- 2"	6	21'-10"	2	10	2.526	163.907	2.524	131.175	E
6	5	4	9"	4'-4"	1'- 0"	3'-0"	1'- 4½"	0'-11¼"	20'-4"	1'-9"	21'-10"	80	32	78.096	2.640	254.688	22'- 2"	6	21'-10"	2	12	2.631	170.809	2.617	131.175	G
6	6	4	9"	4'-4"	1'- 0"	3'-0"	1'- 4½"	0'-11¼"	20'-4"	1'-9"	21'-10"	80	40	80.920	2.738	266.899	22'- 2"	6	21'-10"	2	14	2.758	177.712	2.732	131.175	I
6	7	4	9"	4'-4"	1'- 0"	3'-0"	1'- 4½"	0'-11¼"	20'-4"	1'-9"	21'-10"	80	48	83.744	2.834	299.565	22'- 2"	6	21'-10"	2	16	2.864	184.615	2.825	131.175	K
6	8	4	9"	4'-6"	1'- 0"	3'-0"	1'- 4½"	0'-11¼"	20'-7"	1'-9"	22'-1"	80	56	86.568	3.030	331.062	22'- 2"	6	21'-10"	2	18	2.969	191.517	2.917	131.175	M
7	4	5	9"	4'-11"	1'- 2½"	3'-5"	1'- 7⅞"	1'- 1⅝"	23'-4"	1'-11"	25'-2"	92	24	85.292	3.198	321.237	25'- 2"	6	24'-10"	2	10	2.649	181.931	2.657	149.199	E
7	6	5	9"	4'-11"	1'- 2½"	3'-5"	1'- 7⅞"	1'- 1⅝"	23'-4"	1'-11"	25'-2"	92	40	90.940	3.393	351.266	25'- 2"	6	24'-10"	2	14	2.859	195.736	2.842	149.199	I
7	8	5	9"	5'-1"	1'- 2"	3'-5"	1'- 7⅛"	1'- 1⅛"	23'-7"	2'-0"	25'-4"	92	56	96.588	3.616	398.726	25'- 2"	6	24'-10"	2	18	3.069	209.541	3.028	149.199	M
7	10	5	9"	5'-3"	1'- 2"	3'-5"	1'- 7⅛"	1'- 1⅛"	23'-11"	2'-0"	25'-8"	92	72	102.236	3.986	482.871	25'- 2"	6	24'-10"	2	22	3.140	223.347	3.073	149.199	Q
8	4	6	9"	5'-7"	1'- 5"	3'-10"	1'-11¼"	1'- 4"	26'-4"	2'-2"	28'-6"	104	24	95.312	3.942	457.422	28'- 2"	6	27'-10"	2	10	2.703	199.955	2.721	167.223	E
8	6	5	8"	5'-6"	1'- 5"	3'-10"	1'-11⅜"	1'- 4⅛"	26'-4"	2'-1"	28'-6"	104	40	100.960	4.142	421.090	28'- 2"	6	27'-10"	2	14	2.913	213.760	2.906	167.223	I
8	8	5	8"	5'-7"	1'- 4½"	3'-10"	1'-10¾"	1'- 3⅝"	26'-5"	2'-2"	28'-6"	104	56	106.608	4.288	483.673	28'- 2"	6	27'-10"	2	18	3.123	227.565	3.092	167.223	M
8	10	5	8"	5'-10"	1'- 4½"	3'-10"	1'-10¾"	1'- 3⅝"	26'-11"	2'-2"	29'-0"	104	72	112.256	4.735	546.994	28'- 2"	6	27'-10"	2	22	3.190	241.371	3.132	167.223	Q
9	4	6	9"	6'-2"	1'- 7"	4'-3"	2'- 2⅛"	1'- 6"	29'-4"	2'-5"	31'-9"	116	24	105.332	4.693	504.698	31'- 2"	6	30'-10"	2	10	2.765	217.979	2.793	185.247	F
9	6	6	9"	6'-2"	1'- 7"	4'-3"	2'- 2⅛"	1'- 6"	29'-4"	2'-5"	31'-9"	116	40	110.980	4.888	538.646	31'- 2"	6	30'-10"	2	14	2.975	231.784	2.978	185.247	J
9	8	6	9"	6'-3"	1'- 7"	4'-3"	2'- 2⅛"	1'- 6"	29'-5"	2'-5"	31'-10"	116	56	116.628	5.117	610.412	31'- 2"	6	30'-10"	2	18	3.185	245.589	3.164	185.247	N
9	10	6	9"	6'-6"	1'- 7"	4'-3"	2'- 2⅛"	1'- 6"	29'-11"	2'-5"	32'-4"	116	72	122.276	5.571	681.462	31'- 2"	6	30'-10"	2	22	3.249	259.395	3.201	185.247	R
9	12	6	9"	6'-8"	1'- 7"	4'-3"	2'- 2⅛"	1'- 6"	30'-4"	2'-5"	32'-9"	116	88	127.924	6.050	761.471	31'- 2"	6	30'-10"	2	26	3.317	273.200	3.243	185.247	V
10	4	6	9"	6'-9"	1'-10"	4'-8"	2'- 6⅜"	1'- 9"	32'-3"	2'-6"	35'-2"	128	24	115.352	5.720	556.431	34'- 2"	6	33'-10"	2	10	2.731	236.003	2.769	203.271	F
10	6	6	9"	6'-9"	1'- 9½"	4'-8"	2'- 5⅝"	1'- 8½"	32'-3"	2'-7"	35'-1"	128	40	121.000	5.814	592.755	34'- 2"	6	33'-10"	2	14	2.941	249.808	2.954	203.271	J
10	8	6	9"	6'-9"	1'- 9½"	4'-8"	2'- 5⅝"	1'- 8½"	32'-3"	2'-7"	35'-1"	128	56	126.648	6.006	662.601	34'- 2"	6	33'-10"	2	18	3.152	263.613	3.140	203.271	N
10	10	6	9"	7'-0"	1'- 9½"	4'-8"	2'- 5⅝"	1'- 8½"	32'-9"	2'-7"	35'-7"	128	72	132.296	6.463	725.436	34'- 2"	6	33'-10"	2	22	3.210	277.419	3.172	203.271	R
10	12	6	9"	7'-3"	1'- 9½"	4'-8"	2'- 5⅝"	1'- 8½"	33'-3"	2'-7"	36'-1"	128	88	137.944	6.992	804.999	34'- 2"	6	33'-10"	2	26	3.275	291.224	3.211	203.271	V
12	6	7	9"	8'-0"	2'- 2½"	5'-5"	3'- ⅝"	2'- 1¼"	38'-3"	3'-0"	41'-9"	152	40	141.040	7.932	855.425	40'- 2"	6	39'-10"	2	14	2.828	285.856	2.861	239.319	K
12	8	7	9"	8'-0"	2'- 2½"	5'-5"	3'- ⅝"	2'- 1¼"	38'-3"	3'-0"	41'-9"	152	56	146.688	8.124	919.861	40'- 2"	6	39'-10"	2	18	3.063	299.661	3.071	239.319	O
12	10	7	8"	8'-1"	2'- 2½"	5'-5"	3'- ⅝"	2'- 1¼"	38'-7"	3'-0"	42'-0"	152	72	152.336	8.471	1103.668	40'- 2"	6	39'-10"	2	22	3.089	313.467	3.071	239.319	S
12	12	7	8"	8'-5"	2'- 2½"	5'-5"	3'- ⅝"	2'- 1¼"	39'-1"	3'-0"	42'-7"	152	88	157.984	9.025	1194.524	40'- 2"	6	39'-10"	2	26	3.123	327.272	3.079	239.319	W

A COPY OF THE ORIGINAL SEALED AND SIGNED DRAWING IS ON FILE IN THE CENTRAL OFFICE.

SPECIFICATION REFERENCE

TRIPLE BOX CULVERTS

40 TO 50 FT. FILLS

VIRGINIA DEPARTMENT OF TRANSPORTATION

VDOT

ROAD AND BRIDGE STANDARDS

REVISION DATE 07/11

SHEET 2 OF 2

1004.18

BCQ-DT

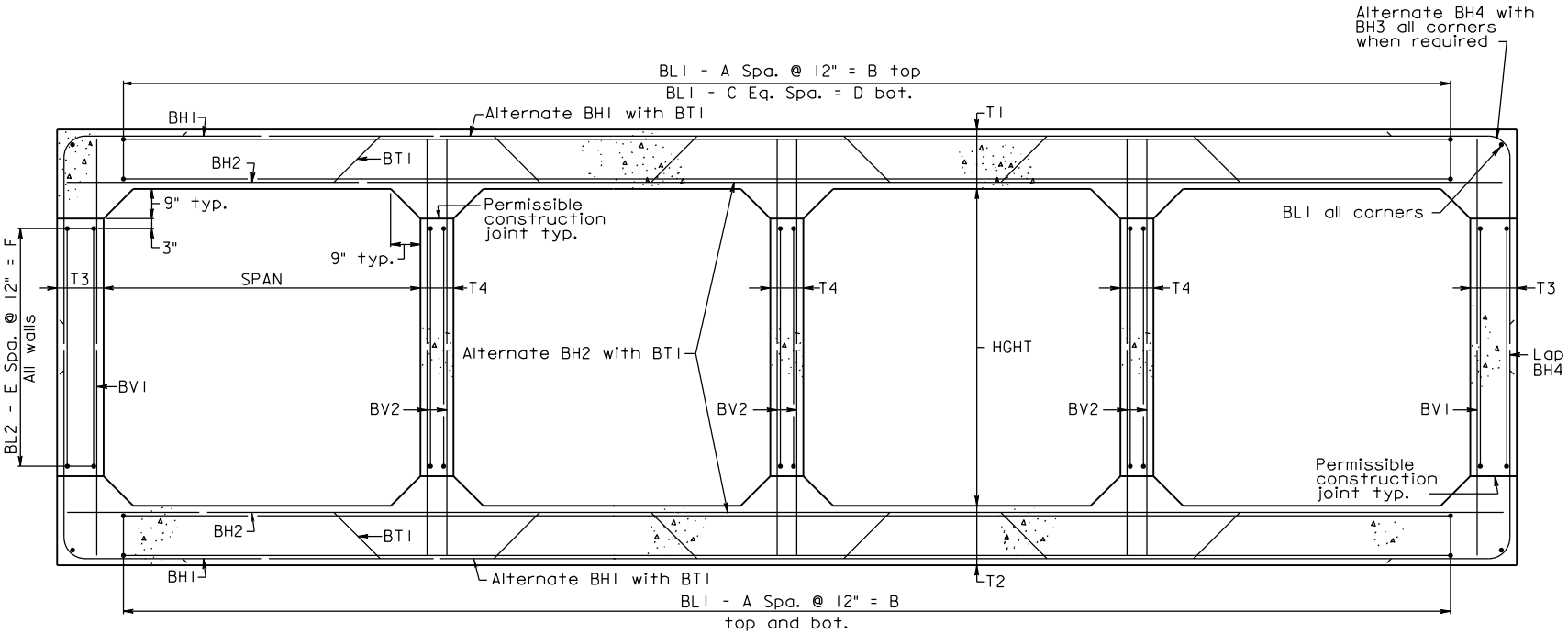

TYPICAL SECTION

A COPY OF THE ORIGINAL SEALED AND SIGNED DRAWING IS ON FILE IN THE CENTRAL OFFICE.

VDOT ROAD AND BRIDGE STANDARDS	QUADRUPLE BOX CULVERTS	SPECIFICATION REFERENCE
SHEET 1 OF 3	STANDARD DETAILS	
REVISION DATE	VIRGINIA DEPARTMENT OF TRANSPORTATION	
1005.01 / 07/11		

GENERAL NOTE

Capacity: AASHTO HI-93 Loading.

Specifications:

Construction - Virginia Department of Transportation Road and Bridge Specifications.

Design - AASHTO LRFD Bridge Design Specifications, 5th Edition 2010; 2011 Interim Specifications; and VDOT Modifications.

All concrete shall be Class A4.

Deformed reinforcing bars shall conform to ASTM A615, Grade 60. All reinforcing bar dimensions on the detailed drawings are to centers of bars except where otherwise noted and are subject to fabrication and construction tolerances.

Construction joints shall be constructed and bonded in accordance with the current Road and Bridge Specifications.

Barrels more than 35' in length shall be poured in sections by providing vertical construction joints, not exceeding 25' between joints nor more than 30' from ends of barrels.

** All bends shall be made with a pin diameter as listed in TABLE A except for Bars BH3 and BH4 which shall have a pin diameter of 24 bar diameters.

Dimensions on bar diagrams are out-to-out of bars. Bars are straight and #4 size unless otherwise shown. BL2 shall be #3 size.

The number of BL1 and BL2 bars shown in the table is the number of longitudinal bars shown in the Typical Section and may not equal the total number of bars required. BL1 and BL2 shall have a lap of 30 bar diameters at splices. At construction joints, first placed bars shall project 30 bar diameters beyond the joint. Estimated QUAN./LF shown for reinforcing steel does not include quantity for laps of BL1 and BL2 bars. The additional weight per longitudinal lap is shown in the table.

The minimum cover of main reinforcing bars shall be 2½" from the face of the concrete for culverts under 0 to 2 foot fills and shall be 2" from the face of cencrete for all other culverts.

All reinforcing steel for culverts under 0 to 2 foot fills shall be Low Carbon/Chromium Reinforcing Steel conforming to ASTM A1035.

At the Contractor's option, BV1 and BV2 bars may be spliced at the permissible construction joint in order to facilitate construction. No additional compensation shall be provided for the increase in reinforcing steel quantity due to the splices.

Bar HW2 shall be 4" less than culvert height in length.

Headwall quantities shown assume wingwalls are to be built at a 45° angle to the headwall.

The designs are applicable to the fill height and other conditions indicated. Any change in the conditions invalidates these designs.

Wingwalls referenced by letter apply when the acceptable foundation level is the same for both box and wings. If foundation levels are different, the height of the wingwall shall be adjusted by selection of another lettered wingwall of appropriate height. For wingwall details, refer to standard series BCW for the appropriate fill slope.

For details of extending existing boxes, refer to Standard BCE-01.

For modification of details for skewed culverts, see the skewed box details included in the road plans.

This standard shall be used with the BCQ standard series.

A COPY OF THE ORIGINAL SEALED AND SIGNED DRAWING IS ON FILE IN THE CENTRAL OFFICE.

SPECIFICATION REFERENCE	QUADRUPLE BOX CULVERTS STANDARD DETAILS VIRGINIA DEPARTMENT OF TRANSPORTATION	VDOT ROAD AND BRIDGE STANDARDS	
		REVISION DATE	SHEET 2 OF 3
		07/12	1005.02

BCQ-DT

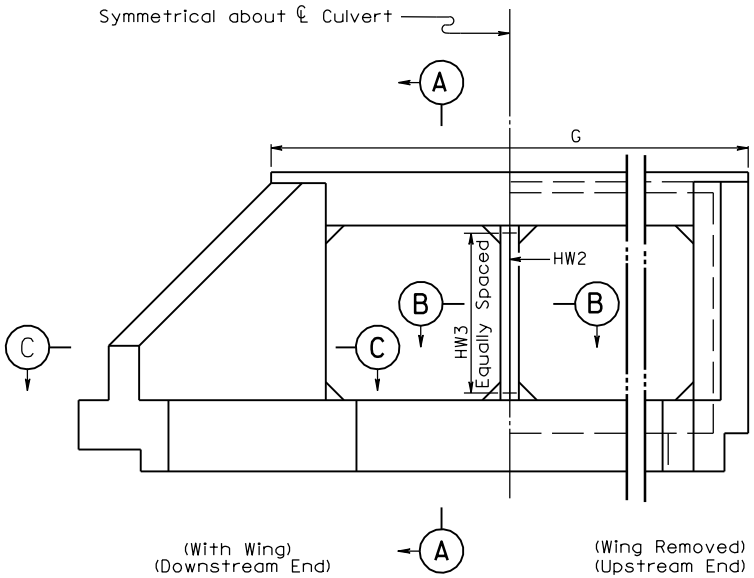

END ELEVATION

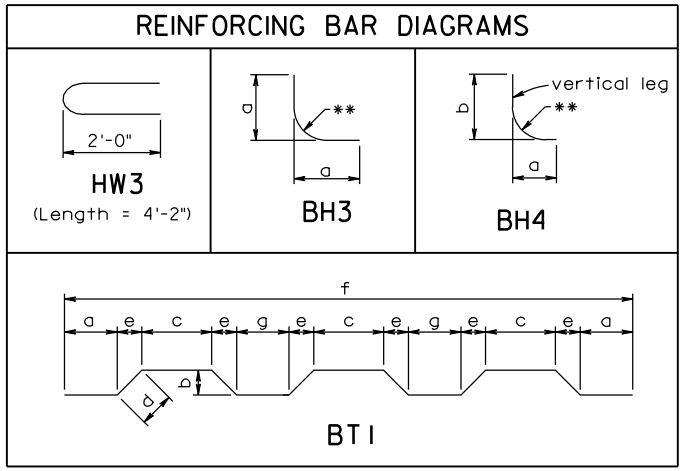

TABLE A	
Bar Size	Pin Dia.
#3	2¼"
#4	3"
#5	3¾"
#6	4½"
#7	5¼"
#8	6"
#9	9"

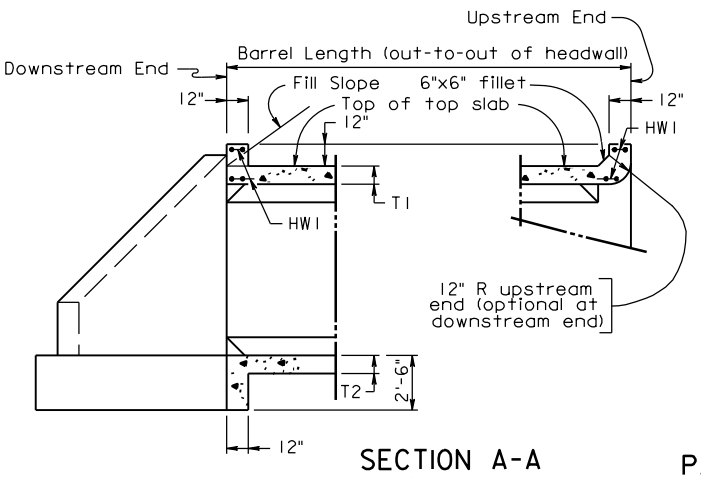

SECTION A-A
(With Wing)

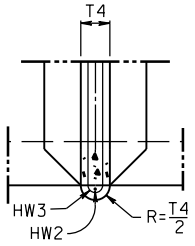

PART SECTION B-B
UPSTREAM END
(Optional at downstream end)

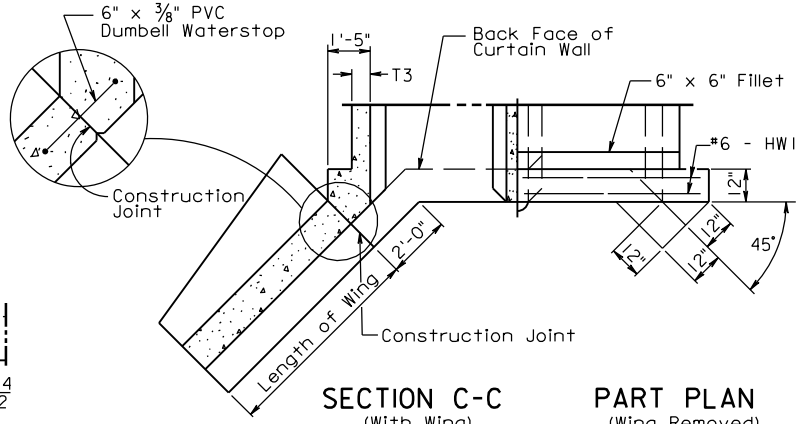

SECTION C-C
(With Wing)
(Downstream End)

PART PLAN
(Wing Removed)
(Upstream End)

VDOT
ROAD AND BRIDGE STANDARDS

SHEET 3 OF 3

1005.03

REVISION DATE
07/11

QUADRUPLE BOX CULVERTS

STANDARD DETAIL

VIRGINIA DEPARTMENT OF TRANSPORTATION

SPECIFICATION REFERENCE

BCQ-DT

THIS PAGE INTENTIONALLY LEFT BLANK

SPECIFICATION REFERENCE	QUADRUPLE BOX CULVERTS STANDARD DETAILS VIRGINIA DEPARTMENT OF TRANSPORTATION	VDOT ROAD AND BRIDGE STANDARDS	
		REVISION DATE 07/11	SHEET 1 OF 1 1005.04

BCQ-02

FOR TYPICAL SECTION, NOTES AND OTHER DETAILS, REFER TO STANDARD BCQ-DT.

DIMENSIONS						REINFORCING STEEL																										
SPAN	HGHT	T1	T2	T3	T4							BH1			BH2			BH3				BH4					BV1			BV2		
(FT.)	(FT.)	TOP SLAB	BOTTOM SLAB	EXTERIOR WALL (IN.)	INTERIOR WALL (IN.)	A	B	C	D	E	F	SIZE	SPACING C-C	LENGTH	SIZE	SPACING C-C	LENGTH	SIZE	SPACING C-C	a	LENGTH	SIZE	SPACING C-C	a	b	LENGTH	SIZE	SPACING C-C	LENGTH	SIZE	SPACING C-C	LENGTH
3	3	8"	8"	8"	8"	13	13'- 0"	26	13'- 0"	1	1'- 0"	4	12"	14'-10"	4	12"	15'- 0"	--	---	-----	-----	4	12"	2'- 1¼"	2'- 8"	4'- 6"	4	12"	4'- 0"	4	12"	4'- 0"
3	4	8"	8"	8"	8"	13	13'- 0"	26	13'- 0"	2	2'- 0"	4	12"	14'-10"	4	12"	15'- 0"	4	12"	2'- 4"	4'- 6"	4	12"	2'- 1¼"	3'- 2"	5'- 0"	4	12"	5'- 0"	4	10"	5'- 0"
4	3	9¼"	9¼"	8"	8"	17	17'- 0"	34	17'- 0"	1	1'- 0"	4	12"	18'- 5"	4	12"	19'- 0"	4	12"	2'- 3⅝"	4'- 4"	4	12"	2'- 3⅝"	2'- 9¼"	4'-10"	4	12"	4'- 2"	4	12"	4'- 2"
4	4	9¼"	9¼"	8"	8"	17	17'- 0"	34	17'- 0"	2	2'- 0"	4	12"	18'- 5"	4	12"	19'- 0"	4	12"	2'- 3⅝"	4'- 4"	4	12"	2'- 3⅝"	3'- 3¼"	5'- 4"	4	12"	5'- 2"	4	9½"	5'- 2"
4	5	9½"	9½"	8"	8"	17	17'- 0"	34	17'- 0"	3	3'- 0"	4	12"	18'- 5"	4	12"	19'- 0"	4	12"	2'- 8"	5'- 1"	4	12"	2'- 3⅝"	3'- 9½"	5'-10"	4	12"	6'- 3"	4	9"	6'- 3"
4	6	9½"	9½"	8"	8"	17	17'- 0"	34	17'- 0"	4	4'- 0"	4	12"	18'- 5"	4	12"	19'- 0"	4	12"	2'-11"	5'- 7"	4	12"	2'- 3⅝"	4'- 3½"	6'- 4"	4	12"	7'- 3"	4	9"	7'- 3"
5	3	9"	9"	8"	8"	21	21'- 0"	42	21'- 0"	1	1'- 0"	4	11"	22'- 0"	4	11"	23'- 0"	4	11"	2'- 6"	4'- 9"	4	11"	2'- 6"	2'- 9"	5'- 0"	4	12"	4'- 2"	4	10"	4'- 2"
5	4	9"	9"	8"	8"	21	21'- 0"	42	21'- 0"	2	2'- 0"	4	11"	22'- 0"	4	11"	23'- 0"	4	11"	2'- 6"	4'- 9"	4	11"	2'- 6"	3'- 3"	5'- 6"	4	12"	5'- 2"	4	7½"	5'- 2"
5	5	9"	9"	8"	8"	21	21'- 0"	42	21'- 0"	3	3'- 0"	4	11"	22'- 0"	4	11"	23'- 0"	4	11"	2'- 6"	4'- 9"	4	11"	2'- 6"	3'- 9"	6'- 0"	4	12"	6'- 2"	4	7"	6'- 2"
5	6	9"	9"	8"	8"	21	21'- 0"	42	21'- 0"	4	4'- 0"	4	11"	22'- 0"	5	11"	23'- 0"	4	11"	2'-11"	5'- 7"	4	11"	2'- 6"	4'- 3"	6'- 6"	4	12"	7'- 2"	4	7"	7'- 2"
5	7	9"	9"	8"	8"	21	21'- 0"	42	21'- 0"	5	5'- 0"	4	10"	22'- 0"	4	10"	23'- 0"	4	10"	3'- 1"	5'-10"	4	10"	2'- 6"	4'- 9"	7'- 0"	4	12"	8'- 2"	4	6½"	8'- 2"
6	4	8¾"	8¾"	8"	8"	25	25'- 0"	50	25'- 0"	2	2'- 0"	4	9"	25'-11"	4	9"	27'- 0"	4	9"	2'- 8⅜"	5'- 2"	4	9"	2'- 8⅜"	3'- 2¾"	5'- 8"	4	12"	5'- 2"	5	9½"	5'- 2"
6	5	8¾"	8¾"	8"	8"	25	25'- 0"	50	25'- 0"	3	3'- 0"	4	9"	25'-11"	4	9"	27'- 0"	4	9"	2'- 8⅜"	5'- 2"	4	9"	2'- 8⅜"	3'- 8¾"	6'- 2"	4	12"	6'- 2"	5	9"	6'- 2"
6	6	8¾"	8¾"	8"	8"	25	25'- 0"	50	25'- 0"	4	4'- 0"	4	9"	25'-11"	4	9"	27'- 0"	4	9"	2'- 8⅜"	5'- 2"	4	9"	2'- 8⅜"	4'- 2¾"	6'- 8"	4	12"	7'- 2"	4	5½"	7'- 2"
6	7	8¾"	8¾"	8"	8"	25	25'- 0"	50	25'- 0"	5	5'- 0"	4	9"	25'-11"	4	9"	27'- 0"	4	9"	3'- 1"	5'-10"	4	9"	2'- 8⅜"	4'- 8¾"	7'- 2"	4	12"	8'- 2"	4	5½"	8'- 2"
6	8	8¾"	8¾"	8"	8"	25	25'- 0"	50	25'- 0"	6	6'- 0"	4	8"	25'-11"	4	8"	27'- 0"	4	8"	3'- 4"	6'- 6"	4	8"	2'- 8⅜"	5'- 2¾"	7'- 8"	4	12"	9'- 2"	4	5½"	9'- 2"
7	4	8¾"	8¾"	8"	8"	29	29'- 0"	58	29'- 0"	2	2'- 0"	4	8"	29'-11"	4	8"	31'- 0"	4	8"	2'-10¾"	5'- 6"	4	8"	2'-10¾"	3'- 2¾"	5'-10"	4	12"	5'- 2"	4	7"	5'- 2"
7	6	8¾"	8¾"	8"	8"	29	29'- 0"	58	29'- 0"	4	4'- 0"	4	8"	29'-11"	4	8"	31'- 0"	4	8"	2'-10¾"	5'- 6"	4	8"	2'-10¾"	4'- 2¾"	6'-10"	4	12"	7'- 2"	4	7"	7'- 2"
7	8	8¾"	8¾"	8"	8"	29	29'- 0"	58	29'- 0"	6	6'- 0"	5	11"	29'-11"	5	11"	31'- 0"	4	11"	3'- 4"	6'- 6"	5	11"	2'-10¾"	5'- 2¾"	7'-10"	4	12"	9'- 2"	4	7"	9'- 2"
7	10	9"	9"	8"	8"	29	29'- 0"	58	29'- 0"	8	8'- 0"	5	11"	29'-11"	5	11"	31'- 0"	4	11"	3'- 8"	6'-11"	5	11"	2'-10¾"	6'- 3"	8'-10"	4	12"	11'- 2"	4	7½"	11'- 2"
8	4	9"	9"	8"	8"	33	33'- 0"	66	33'- 0"	2	2'- 0"	5	12"	33'- 8"	5	12"	35'- 0"	--	---	-----	-----	6	12"	3'- 7"	3'- 7"	6'- 9"	4	12"	5'- 2"	5	9½"	5'- 2"
8	6	9"	9"	8"	8"	33	33'- 0"	66	33'- 0"	4	4'- 0"	5	11"	33'- 8"	5	11"	35'- 0"	4	11"	3'- 1¼"	5'-11"	5	11"	3'- 1¼"	4'- 3"	7'- 0"	4	12"	7'- 2"	4	6"	7'- 2"
8	8	9¼"	9¼"	8"	8"	33	33'- 0"	66	33'- 0"	6	6'- 0"	5	11"	33'- 8"	5	11"	35'- 0"	4	11"	3'- 1¼"	5'-11"	5	11"	3'- 1¼"	5'- 3¼"	8'- 1"	4	12"	9'- 2"	5	9½"	9'- 2"
8	10	9¼"	9¼"	8"	8"	33	33'- 0"	66	33'- 0"	8	8'- 0"	5	10"	33'- 8"	5	10"	35'- 0"	4	10"	3'- 8"	6'-11"	5	10"	3'- 1¼"	6'- 3¼"	9'- 1"	4	12"	11'- 2"	4	6½"	11'- 2"
9	4	9½"	9½"	8"	8"	37	37'- 0"	74	37'- 0"	2	2'- 0"	5	11"	37'- 8"	5	11"	39'- 0"	--	---	-----	-----	6	11"	3'-10"	3'- 7"	7'- 0"	4	12"	5'- 3"	4	5½"	5'- 3"
9	6	9½"	9½"	8"	8"	37	37'- 0"	74	37'- 0"	4	4'- 0"	5	10"	37'- 8"	5	10"	39'- 0"	4	10"	3'- 3⅝"	6'- 4"	5	10"	3'- 3⅝"	4'- 3½"	7'- 3"	4	12"	7'- 3"	4	5½"	7'- 3"
9	8	9½"	9½"	8"	8"	37	37'- 0"	74	37'- 0"	6	6'- 0"	5	10"	37'- 8"	5	10"	39'- 0"	4	10"	3'- 3⅝"	6'- 4"	5	10"	3'- 3⅝"	5'- 3½"	8'- 3"	4	12"	9'- 3"	4	5½"	9'- 3"
9	10	9"	9"	8"	8"	37	37'- 0"	74	37'- 0"	8	8'- 0"	5	9"	37'- 8"	5	9"	39'- 0"	4	9"	3'- 8"	6'-11"	5	9"	3'- 3⅝"	6'- 3"	9'- 3"	4	12"	11'- 2"	5	8"	11'- 2"
9	12	9"	9"	8"	8"	37	37'- 0"	74	37'- 0"	10	10'- 0"	6	12"	37'- 8"	6	12"	39'- 0"	5	12"	4'- 1"	7'-11"	6	12"	3'-10"	7'- 7"	11'- 0"	5	10½"	13'- 2"	4	5½"	13'- 2"
10	4	9¾"	9¾"	8"	8"	41	41'- 0"	82	41'- 0"	2	2'- 0"	5	10"	41'- 8"	5	10"	43'- 0"	--	---	-----	-----	6	10"	4'- 0"	3'- 8"	7'- 3"	4	12"	5'- 3"	5	8"	5'- 3"
10	6	9¾"	9¾"	8"	8"	41	41'- 0"	82	41'- 0"	4	4'- 0"	5	9"	41'- 8"	5	9"	43'- 0"	--	---	-----	-----	5	9"	3'- 6"	4'- 3¾"	7'- 6"	4	12"	7'- 3"	4	5"	7'- 3"
10	8	9¾"	9¾"	8"	8"	41	41'- 0"	82	41'- 0"	6	6'- 0"	6	12"	41'- 8"	6	12"	43'- 0"	4	12"	3'- 6"	6'- 9"	6	12"	4'- 0"	5'- 8"	9'- 3"	4	12"	9'- 3"	4	5"	9'- 3"
10	10	9¾"	9¾"	8"	8"	41	41'- 0"	82	41'- 0"	8	8'- 0"	5	8"	41'- 8"	5	8"	43'- 0"	4	8"	3'- 8"	6'-11"	5	8"	3'- 6"	6'- 3¾"	9'- 6"	4	12"	11'- 3"	5	8"	11'- 3"
10	12	9¾"	9¾"	8"	8"	41	41'- 0"	82	41'- 0"	10	10'- 0"	5	8"	41'- 8"	5	8"	43'- 0"	4	8"	4'- 1"	7'-11"	5	8"	3'- 6"	7'- 3¾"	10'- 6"	5	10½"	13'- 3"	5	8"	13'- 3"
12	6	10¼"	10¼"	8"	8"	49	49'- 0"	98	49'- 0"	4	4'- 0"	6	8"	49'- 8"	5	8"	51'- 0"	4	8"	3'-10¾"	7'- 6"	5	8"	3'-10¾"	4'- 4¼"	7'-11"	4	12"	7'- 5"	5	6½"	7'- 5"
12	8	10¼"	10¼"	8"	8"	49	49'- 0"	98	49'- 0"	6	6'- 0"	5	8"	49'- 8"	5	8"	51'- 0"	4	8"	3'-10¾"	7'- 6"	5	8"	3'-10¾"	5'- 4¼"	8'-11"	4	10½"	9'- 5"	5	6½"	9'- 5"
12	10	10¼"	10¼"	8"	8"	49	49'- 0"	98	49'- 0"	8	8'- 0"	6	11"	49'- 8"	6	11"	51'- 0"	--	---	-----	-----	7	11"	4'-10"	6'-11"	11'- 3"	4	12"	11'- 5"	6	9½"	11'- 5"
12	12	10¼"	10¼"	8"	8"	49	49'- 0"	98	49'- 0"	10	10'- 0"	6	10"	49'- 8"	6	10"	51'- 0"	4	10"	4'- 1"	7'-11"	6	10"	4'- 5"	7'- 8"	11'- 8"	5	10"	13'- 5"	6	9½"	13'- 5"

A COPY OF THE ORIGINAL SEALED AND SIGNED DRAWING IS ON FILE IN THE CENTRAL OFFICE.

VDOT
ROAD AND BRIDGE STANDARDS

SHEET 1 OF 2 | REVISION DATE
1005.05 | 07/11

QUADRUPLE BOX CULVERTS

0 TO 2 FT. FILLS

VIRGINIA DEPARTMENT OF TRANSPORTATION

SPECIFICATION REFERENCE

BCQ-02

FOR TYPICAL SECTION, NOTES AND OTHER DETAILS, REFER TO STANDARD BCQ-DT.

SPAN (FT.)	HGHT (FT.)	REINFORCING STEEL BT1 SIZE	SPACING c-c	a	b	c	d	e	f	g	LENGTH	NO. BL1 #4 BARS	NO. BL2 #3 BARS	REINFORCING STEEL (LBS/LONG. JT)	QUAN./LF CONCRETE CLASS A4 (CY/LF)	REINFORCING STEEL (LBS/LF)	HEADWALLS G HEADWALL LENGTH	HW1 SIZE	HW1 LENGTH	NO. HW2 BARS	NO. HW3 BARS	INLET CONCRETE CL. A4 (CY)	INLET REINFORCING STEEL (LBS)	OUTLET CONCRETE CL. A4 (CY)	OUTLET REINFORCING STEEL (LBS)	WINGWALL
3	3	4	12"	2'- 8 7/8"	0'- 4 1/2"	1'- 6 5/8"	0'- 5 7/8"	0'- 3 3/4"	14'-11 7/8"	1'- 5 7/8"	15'- 9"	73	20	68.015	1.283	150.583	16'-10"	6	16'- 6"	3	12	2.222	137.876	2.191	99.132	A
3	4	4	12"	2'- 8 7/8"	0'- 4 1/2"	1'- 6 5/8"	0'- 5 7/8"	0'- 3 3/4"	14'-11 7/8"	1'- 5 7/8"	15'- 9"	73	30	71.545	1.404	182.264	16'-10"	6	16'- 6"	3	15	2.333	148.230	2.284	99.132	C
4	3	4	12"	3'- 5 7/8"	0'- 5 3/4"	1'-10 1/4"	0'- 7 5/8"	0'- 5"	19'- 0"	1'-11 3/4"	20'- 0"	93	20	84.715	1.626	193.113	20'-10"	6	20'- 6"	3	12	2.595	161.908	2.577	123.164	B
4	4	4	12"	3'- 5 7/8"	0'- 5 3/4"	1'-10 1/4"	0'- 7 5/8"	0'- 5"	19'- 0"	1'-11 3/4"	20'- 0"	93	30	88.245	1.749	209.002	20'-10"	6	20'- 6"	3	15	2.706	172.262	2.670	123.164	D
4	5	4	12"	3'- 5 3/4"	0'- 6"	1'-10"	0'- 8"	0'- 5 1/4"	19'- 0"	1'-11 1/2"	20'- 1"	93	40	91.775	1.901	225.081	20'-10"	6	20'- 6"	3	18	2.808	182.616	2.753	123.164	F
4	6	4	12"	3'- 5 3/4"	0'- 6"	1'-10"	0'- 8"	0'- 5 1/4"	19'- 0"	1'-11 1/2"	20'- 1"	93	50	95.305	2.023	245.516	20'-10"	6	20'- 6"	3	21	2.919	192.970	2.845	123.164	H
5	3	4	11"	4'- 3 5/8"	0'- 5 1/2"	2'- 3 1/4"	0'- 7 1/4"	0'- 4 3/4"	23'- 0"	2'- 7 1/4"	24'- 0"	113	20	101.415	1.815	237.595	24'-10"	6	24'- 6"	3	12	2.979	185.940	2.974	147.196	A
5	4	4	11"	4'- 3 5/8"	0'- 5 1/2"	2'- 3 1/4"	0'- 7 1/4"	0'- 4 3/4"	23'- 0"	2'- 7 1/4"	24'- 0"	113	30	104.945	1.937	257.242	24'-10"	6	24'- 6"	3	15	3.090	196.294	3.067	147.196	C
5	5	4	11"	4'- 3 5/8"	0'- 5 1/2"	2'- 3 1/4"	0'- 7 1/4"	0'- 4 3/4"	23'- 0"	2'- 7 1/4"	24'- 0"	113	40	108.475	2.060	273.033	24'-10"	6	24'- 6"	3	18	3.201	206.648	3.160	147.196	E
5	6	4	11"	4'- 3 5/8"	0'- 5 1/2"	2'- 3 1/4"	0'- 7 1/4"	0'- 4 3/4"	23'- 0"	2'- 7 1/4"	24'- 0"	113	50	112.005	2.180	316.776	24'-10"	6	24'- 6"	3	21	3.313	217.002	3.253	147.196	G
5	7	4	10"	4'- 3 5/8"	0'- 5 1/2"	2'- 3 1/4"	0'- 7 1/4"	0'- 4 3/4"	23'- 0"	2'- 7 1/4"	24'- 0"	113	60	115.535	2.302	329.987	24'-10"	6	24'- 6"	3	24	3.424	227.356	3.345	147.196	I
6	4	4	9"	5'- 1 3/8"	0'- 5 1/4"	2'- 8 1/4"	0'- 6 7/8"	0'- 4 1/2"	27'- 0"	3'- 2 3/4"	27'-11"	133	30	121.645	2.112	329.861	28'-10"	6	28'- 6"	3	15	3.499	220.326	3.489	171.228	C
6	5	4	9"	5'- 1 3/8"	0'- 5 1/4"	2'- 8 1/4"	0'- 6 7/8"	0'- 4 1/2"	27'- 0"	3'- 2 3/4"	27'-11"	133	40	125.175	2.233	359.273	28'-10"	6	28'- 6"	3	18	3.610	230.680	3.582	171.228	E
6	6	4	9"	5'- 1 3/8"	0'- 5 1/4"	2'- 8 1/4"	0'- 6 7/8"	0'- 4 1/2"	27'- 0"	3'- 2 3/4"	27'-11"	133	50	128.705	2.355	379.181	28'-10"	6	28'- 6"	3	21	3.721	241.034	3.674	171.228	G
6	7	4	9"	5'- 1 3/8"	0'- 5 1/4"	2'- 8 1/4"	0'- 6 7/8"	0'- 4 1/2"	27'- 0"	3'- 2 3/4"	27'-11"	133	60	132.235	2.477	397.761	28'-10"	6	28'- 6"	3	24	3.833	251.388	3.767	171.228	I
6	8	4	8"	5'- 1 3/8"	0'- 5 1/4"	2'- 8 1/4"	0'- 6 7/8"	0'- 4 1/2"	27'- 0"	3'- 2 3/4"	27'-11"	133	70	135.765	2.598	438.628	28'-10"	6	28'- 6"	3	27	3.944	261.742	3.860	171.228	K
7	4	4	8"	5'-11"	0'- 5 1/4"	3'- 1 1/8"	0'- 6 7/8"	0'- 4 1/2"	31'- 1/8"	3'- 9 7/8"	31'-11"	153	30	138.345	2.323	397.868	32'-10"	6	32'- 6"	3	15	3.894	244.358	3.898	195.260	C
7	6	4	8"	5'-11"	0'- 5 1/4"	3'- 1 1/8"	0'- 6 7/8"	0'- 4 1/2"	31'- 1/8"	3'- 9 7/8"	31'-11"	153	50	145.405	2.568	426.453	32'-10"	6	32'- 6"	3	21	4.117	265.066	4.083	195.260	G
7	8	5	11"	5'-11"	0'- 5 3/8"	3'- 1 1/8"	0'- 7"	0'- 4 1/2"	31'- 1/8"	3'- 9 7/8"	31'-11"	153	70	152.465	2.810	481.580	32'-10"	6	32'- 6"	3	27	4.339	285.774	4.268	195.260	K
7	10	5	11"	5'-10 7/8"	0'- 5 5/8"	3'- 7/8"	0'- 7 3/8"	0'- 4 3/4"	31'- 1/8"	3'- 9 5/8"	32'- 0"	153	90	159.525	3.104	507.590	32'-10"	6	32'- 6"	3	33	4.543	306.482	4.435	195.260	O
8	4	5	12"	6'- 8 3/8"	0'- 5 5/8"	3'- 5 5/8"	0'- 7 3/8"	0'- 4 3/4"	34'-11 7/8"	4'- 4 7/8"	35'-11"	173	30	155.045	2.590	442.425	36'-10"	6	36'- 6"	3	15	4.267	268.390	4.284	219.292	C
8	6	5	11"	6'- 8 3/8"	0'- 5 5/8"	3'- 5 5/8"	0'- 7 3/8"	0'- 4 3/4"	34'-11 7/8"	4'- 4 7/8"	35'-11"	173	50	162.105	2.833	501.470	36'-10"	6	36'- 6"	3	21	4.490	289.098	4.469	219.292	G
8	8	5	11"	6'- 8 1/4"	0'- 5 7/8"	3'- 5 3/8"	0'- 7 3/4"	0'- 5"	34'-11 7/8"	4'- 4 5/8"	36'- 0"	173	70	169.165	3.132	531.756	36'-10"	6	36'- 6"	3	27	4.708	309.806	4.651	219.292	L
8	10	5	10"	6'- 8 1/4"	0'- 5 7/8"	3'- 5 3/8"	0'- 7 3/4"	0'- 5"	34'-11 7/8"	4'- 4 5/8"	36'- 0"	173	90	176.225	3.374	587.781	36'-10"	6	36'- 6"	3	33	4.931	330.514	4.836	219.292	P
9	4	5	11"	7'- 5 3/4"	0'- 6 1/8"	3'-10"	0'- 8 1/8"	0'- 5 1/4"	39'- 0"	4'-11 1/2"	40'- 1"	193	30	171.745	2.928	517.402	40'-10"	6	40'- 6"	3	15	4.627	292.422	4.657	243.324	D
9	6	5	10"	7'- 5 3/4"	0'- 6 1/8"	3'-10"	0'- 8 1/8"	0'- 5 1/4"	39'- 0"	4'-11 1/2"	40'- 1"	193	50	178.805	3.170	581.291	40'-10"	6	40'- 6"	3	21	4.850	313.130	4.843	243.324	H
9	8	5	10"	7'- 5 3/4"	0'- 6 1/8"	3'-10"	0'- 8 1/8"	0'- 5 1/4"	39'- 0"	4'-11 1/2"	40'- 1"	193	70	185.865	3.414	614.912	40'-10"	6	40'- 6"	3	27	5.072	333.838	5.028	243.324	L
9	10	5	9"	7'- 6"	0'- 5 5/8"	3'-10 1/2"	0'- 7 3/8"	0'- 4 3/4"	39'- 0"	5'- 0"	40'- 0"	193	90	192.925	3.534	695.825	40'-10"	6	40'- 6"	3	33	5.327	354.546	5.246	243.324	O
9	12	6	12"	7'- 6"	0'- 5 3/4"	3'-10 1/2"	0'- 7 1/2"	0'- 4 3/4"	39'- 0"	5'- 0"	39'-11"	193	110	199.985	3.775	776.824	40'-10"	6	40'- 6"	3	39	5.550	375.254	5.431	243.324	S
10	4	5	10"	8'- 3 1/4"	0'- 6 3/8"	4'- 2 1/2"	0'- 8 3/8"	0'- 5 1/2"	43'- 0"	5'- 6 1/2"	44'- 1"	213	30	188.445	3.224	595.266	44'-10"	6	44'- 6"	3	15	4.985	316.454	5.028	267.356	D
10	6	5	9"	8'- 3 1/4"	0'- 6 3/8"	4'- 2 1/2"	0'- 8 3/8"	0'- 5 1/2"	43'- 0"	5'- 6 1/2"	44'- 1"	213	50	195.505	3.466	651.157	44'-10"	6	44'- 6"	3	21	5.207	337.162	5.213	267.356	H
10	8	6	12"	8'- 3 1/4"	0'- 6 1/2"	4'- 2 1/2"	0'- 8 1/2"	0'- 5 1/2"	43'- 0"	5'- 6 1/2"	44'- 1"	213	70	202.565	3.706	739.583	44'-10"	6	44'- 6"	3	27	5.430	357.870	5.399	267.356	L
10	10	5	8"	8'- 3 1/4"	0'- 6 3/8"	4'- 2 1/2"	0'- 8 3/8"	0'- 5 1/2"	43'- 0"	5'- 6 1/2"	44'- 1"	213	90	209.625	3.948	809.034	44'-10"	6	44'- 6"	3	33	5.653	378.578	5.584	267.356	P
10	12	5	8"	8'- 3 1/4"	0'- 6 3/8"	4'- 2 1/2"	0'- 8 3/8"	0'- 5 1/2"	43'- 0"	5'- 6 1/2"	44'- 1"	213	110	216.685	4.191	862.850	44'-10"	6	44'- 6"	3	39	5.875	399.286	5.770	267.356	T
12	6	5	8"	9'-10 1/4"	0'- 6 7/8"	4'-11 5/8"	0'- 9 1/8"	0'- 6"	51'- 1/8"	6'- 8 3/8"	52'- 3"	253	50	228.905	4.085	928.213	52'-10"	6	52'- 6"	3	21	5.904	385.226	5.937	315.420	H
12	8	5	8"	9'-10 1/4"	0'- 6 7/8"	4'-11 5/8"	0'- 9 1/8"	0'- 6"	51'- 1/8"	6'- 8 3/8"	52'- 3"	253	70	235.965	4.334	906.204	52'-10"	6	52'- 6"	3	27	6.127	405.934	6.122	315.420	L
12	10	6	11"	9'-10 1/4"	0'- 7"	4'-11 5/8"	0'- 9 1/4"	0'- 6"	51'- 1/8"	6'- 8 3/8"	52'- 3"	253	90	243.025	4.577	949.949	52'-10"	6	52'- 6"	3	33	6.349	426.642	6.308	315.420	P
12	12	6	10"	9'-10 1/4"	0'- 7"	4'-11 5/8"	0'- 9 1/4"	0'- 6"	51'- 1/8"	6'- 8 3/8"	52'- 3"	253	110	250.085	4.815	1,069.659	52'-10"	6	52'- 6"	3	39	6.572	447.350	6.493	315.420	T

A COPY OF THE ORIGINAL SEALED AND SIGNED DRAWING IS ON FILE IN THE CENTRAL OFFICE.

SPECIFICATION REFERENCE

QUADRUPLE BOX CULVERTS

0 TO 2 FT. FILLS

VIRGINIA DEPARTMENT OF TRANSPORTATION

VDOT

ROAD AND BRIDGE STANDARDS

REVISION DATE 08/14

SHEET 2 OF 2

1005.06

BCQ-05

FOR TYPICAL SECTION, NOTES AND OTHER DETAILS, REFER TO STANDARD BCQ-DT.

DIMENSIONS						REINFORCING STEEL																										
SPAN	HGHT	T1	T2	T3	T4							BH1			BH2			BH3				BH4					BV1			BV2		
(FT.)	(FT.)	TOP SLAB	BOTTOM SLAB	EXTERIOR WALL (IN.)	INTERIOR WALL (IN.)	A	B	C	D	E	F	SIZE	SPACING C-C	LENGTH	SIZE	SPACING C-C	LENGTH	SIZE	SPACING C-C	a	LENGTH	SIZE	SPACING C-C	a	b	LENGTH	SIZE	SPACING C-C	LENGTH	SIZE	SPACING C-C	LENGTH
3	3	8"	8"	8"	8"	13	13'- 0"	13	13'- 0"	1	1'- 0"	4	12"	14'-10"	4	12"	15'- 0"	--	---	-----	-----	4	12"	2'- 1¼"	2'- 8"	4'- 6"	4	12"	4'- 0"	4	12"	4'- 0"
3	4	8"	8"	8"	8"	13	13'- 0"	13	13'- 0"	2	2'- 0"	4	12"	14'-10"	4	12"	15'- 0"	--	---	-----	-----	4	12"	2'- 1¼"	3'- 2"	5'- 0"	4	12"	5'- 0"	4	12"	5'- 0"
4	3	8"	8"	8"	8"	17	17'- 0"	17	17'- 0"	1	1'- 0"	4	12"	18'- 5"	4	12"	19'- 0"	--	---	-----	-----	4	12"	2'- 3⅝"	2'- 8"	4'- 8"	4	12"	4'- 0"	4	12"	4'- 0"
4	4	8"	8"	8"	8"	17	17'- 0"	17	17'- 0"	2	2'- 0"	4	12"	18'- 5"	4	12"	19'- 0"	4	12"	2'- 3⅝"	4'- 4"	4	12"	2'- 3⅝"	3'- 2"	5'- 2"	4	12"	5'- 0"	4	12"	5'- 0"
4	5	8"	8"	8"	8"	17	17'- 0"	17	17'- 0"	3	3'- 0"	4	12"	18'- 5"	4	12"	19'- 0"	4	12"	2'- 6"	4'- 9"	4	12"	2'- 3⅝"	3'- 8"	5'- 8"	4	12"	6'- 0"	4	11½"	6'- 0"
4	6	8"	8"	8"	8"	17	17'- 0"	17	17'- 0"	4	4'- 0"	4	12"	18'- 5"	4	12"	19'- 0"	4	12"	2'- 9"	5'- 5"	4	12"	2'- 3⅝"	4'- 2"	6'- 2"	4	12"	7'- 0"	4	11"	7'- 0"
5	3	8"	8"	8"	8"	21	21'- 0"	21	21'- 0"	1	1'- 0"	4	12"	22'- 0"	4	12"	23'- 0"	4	12"	2'- 6"	4'- 9"	4	12"	2'- 6"	2'- 8"	4'-11"	4	12"	4'- 0"	4	12"	4'- 0"
5	4	8"	8"	8"	8"	21	21'- 0"	21	21'- 0"	2	2'- 0"	4	12"	22'- 0"	4	12"	23'- 0"	4	12"	2'- 6"	4'- 9"	4	12"	2'- 6"	3'- 2"	5'- 5"	4	12"	5'- 0"	4	10"	5'- 0"
5	5	8"	8"	8"	8"	21	21'- 0"	21	21'- 0"	3	3'- 0"	4	12"	22'- 0"	4	12"	23'- 0"	4	12"	2'- 6"	4'- 9"	4	12"	2'- 6"	3'- 8"	5'-11"	4	12"	6'- 0"	4	10"	6'- 0"
5	6	8"	8"	8"	8"	21	21'- 0"	21	21'- 0"	4	4'- 0"	4	12"	22'- 0"	4	12"	23'- 0"	4	12"	2'- 9"	5'- 5"	4	12"	2'- 6"	4'- 2"	6'- 5"	4	12"	7'- 0"	4	10"	7'- 0"
5	7	8"	8"	8"	8"	21	21'- 0"	21	21'- 0"	5	5'- 0"	4	12"	22'- 0"	4	12"	23'- 0"	4	12"	2'-11"	5'- 8"	4	12"	2'- 6"	4'- 8"	6'-11"	4	12"	8'- 0"	4	9½"	8'- 0"
6	4	8"	8"	8"	8"	25	25'- 0"	25	25'- 0"	2	2'- 0"	4	12"	25'- 8"	4	12"	27'- 0"	--	---	-----	-----	5	12"	2'- 8⅜"	3'- 2"	5'- 6"	4	12"	5'- 0"	4	9"	5'- 0"
6	5	8"	8"	8"	8"	25	25'- 0"	25	25'- 0"	3	3'- 0"	4	12"	25'- 8"	4	12"	27'- 0"	--	---	-----	-----	5	12"	2'- 8⅜"	3'- 8"	6'- 0"	4	12"	6'- 0"	4	8"	6'- 0"
6	6	8"	8"	8"	8"	25	25'- 0"	25	25'- 0"	4	4'- 0"	4	12"	25'- 8"	4	12"	27'- 0"	--	---	-----	-----	5	12"	2'- 8⅜"	4'- 2"	6'- 6"	4	12"	7'- 0"	4	7½"	7'- 0"
6	7	8"	8"	8"	8"	25	25'- 0"	25	25'- 0"	5	5'- 0"	4	11"	25'- 8"	4	11"	27'- 0"	--	---	-----	-----	5	11"	2'- 8⅜"	4'- 8"	7'- 0"	4	12"	8'- 0"	4	7½"	8'- 0"
6	8	8"	8"	8"	8"	25	25'- 0"	25	25'- 0"	6	6'- 0"	4	11"	25'- 8"	4	11"	27'- 0"	4	11"	3'- 2"	6'- 2"	5	11"	2'- 8⅜"	5'- 2"	7'- 6"	4	12"	9'- 0"	4	7½"	9'- 0"
7	4	8"	8"	8"	8"	29	29'- 0"	29	29'- 0"	2	2'- 0"	4	8"	29'-11"	4	8"	31'- 0"	4	8"	2'-10¾"	5'- 6"	4	8"	2'-10¾"	3'- 2"	5'-10"	4	12"	5'- 0"	4	7"	5'- 0"
7	6	8"	8"	8"	8"	29	29'- 0"	29	29'- 0"	4	4'- 0"	4	8"	29'-11"	4	8"	31'- 0"	4	8"	2'-10¾"	5'- 6"	4	8"	2'-10¾"	4'- 2"	6'-10"	4	12"	7'- 0"	5	9½"	7'- 0"
7	8	8"	8"	8"	8"	29	29'- 0"	29	29'- 0"	6	6'- 0"	4	8"	29'-11"	4	8"	31'- 0"	4	8"	3'- 2"	6'- 2"	4	8"	2'-10¾"	5'- 2"	7'-10"	4	12"	9'- 0"	4	6"	9'- 0"
7	10	8"	8"	8"	8"	29	29'- 0"	29	29'- 0"	8	8'- 0"	4	8"	29'-11"	4	8"	31'- 0"	4	8"	3'- 6"	6'- 9"	4	8"	2'-10¾"	6'- 2"	8'-10"	5	12"	11'- 0"	5	9"	11'- 0"
8	4	8"	8"	8"	8"	33	33'- 0"	33	33'- 0"	2	2'- 0"	5	10"	33'- 8"	5	10"	35'- 0"	4	10"	3'- 1¼"	5'-11"	5	10"	3'- 1¼"	3'- 2"	5'-11"	4	12"	5'- 0"	4	6"	5'- 0"
8	6	8¼"	8¼"	8"	8"	33	33'- 0"	33	33'- 0"	4	4'- 0"	5	11"	33'- 8"	5	11"	35'- 0"	--	---	-----	-----	6	11"	3'- 7"	4'- 6"	7'- 9"	4	12"	7'- 0"	4	5½"	7'- 0"
8	8	8¼"	8¼"	8"	8"	33	33'- 0"	33	33'- 0"	6	6'- 0"	6	11"	33'- 8"	5	11"	35'- 0"	4	11"	3'- 1¼"	5'-11"	6	11"	3'- 7"	5'- 6"	8'- 9"	4	12"	9'- 0"	5	8"	9'- 0"
8	10	8½"	8½"	8"	8"	33	33'- 0"	33	33'- 0"	8	8'- 0"	5	10"	33'- 8"	5	10"	35'- 0"	4	10"	3'- 6"	6'- 9"	5	10"	3'- 1¼"	6'- 2½"	9'- 0"	5	12"	11'- 1"	5	8"	11'- 1"
9	4	8½"	8½"	8"	8"	37	37'- 0"	37	37'- 0"	2	2'- 0"	5	9"	37'- 8"	5	9"	39'- 0"	4	9"	3'- 3⅝"	6'- 4"	5	9"	3'- 3⅝"	3'- 2½"	6'- 2"	4	12"	5'- 1"	4	5½"	5'- 1"
9	6	8½"	8½"	8"	8"	37	37'- 0"	37	37'- 0"	4	4'- 0"	5	9"	37'- 8"	5	9"	39'- 0"	4	9"	3'- 3⅝"	6'- 4"	5	9"	3'- 3⅝"	4'- 2½"	7'- 2"	4	12"	7'- 1"	5	8"	7'- 1"
9	8	8½"	8½"	8"	8"	37	37'- 0"	37	37'- 0"	6	6'- 0"	5	9"	37'- 8"	5	9"	39'- 0"	4	9"	3'- 3⅝"	6'- 4"	5	9"	3'- 3⅝"	5'- 2½"	8'- 2"	4	12"	9'- 1"	5	8"	9'- 1"
9	10	9"	9"	8"	8"	37	37'- 0"	37	37'- 0"	8	8'- 0"	5	9"	37'- 8"	5	9"	39'- 0"	4	9"	3'- 8"	6'-11"	5	9"	3'- 3⅝"	6'- 3"	9'- 3"	5	12"	11'- 2"	4	5½"	11'- 2"
9	12	9"	9"	8"	8"	37	37'- 0"	37	37'- 0"	10	10'- 0"	6	12"	37'- 8"	6	12"	39'- 0"	4	12"	4'- 1"	7'-11"	6	12"	3'-10"	7'- 7"	11'- 0"	5	8"	13'- 2"	5	9"	13'- 2"
10	4	9"	9"	8"	8"	41	41'- 0"	41	41'- 0"	2	2'- 0"	6	12"	41'- 8"	6	12"	43'- 0"	--	---	-----	-----	7	12"	4'- 5"	3'-10"	7'- 9"	4	12"	5'- 2"	4	5"	5'- 2"
10	6	9"	9"	8"	8"	41	41'- 0"	41	41'- 0"	4	4'- 0"	6	12"	41'- 8"	6	12"	43'- 0"	--	---	-----	-----	7	12"	4'- 5"	4'-10"	8'- 9"	4	12"	7'- 2"	5	7½"	7'- 2"
10	8	9¼"	9¼"	8"	8"	41	41'- 0"	41	41'- 0"	6	6'- 0"	5	8"	41'- 8"	5	8"	43'- 0"	4	8"	3'- 6"	6'- 9"	5	8"	3'- 6"	5'- 3¼"	8'- 5"	4	12"	9'- 2"	4	5"	9'- 2"
10	10	9½"	9½"	8"	8"	41	41'- 0"	41	41'- 0"	8	8'- 0"	6	11"	41'- 8"	6	11"	43'- 0"	4	11"	3'- 8"	6'-11"	6	11"	4'- 0"	6'- 7"	10'- 3"	4	8½"	11'- 3"	5	8"	11'- 3"
10	12	9¾"	9¾"	8"	8"	41	41'- 0"	41	41'- 0"	10	10'- 0"	6	11"	41'- 8"	6	11"	43'- 0"	--	---	-----	-----	7	11"	4'- 5"	7'-11"	11'-10"	5	8"	13'- 3"	4	5½"	13'- 3"
12	6	10½"	10½"	8"	8"	49	49'- 0"	49	49'- 0"	4	4'- 0"	6	12"	49'- 8"	6	12"	51'- 0"	--	---	-----	-----	7	12"	4'-10"	5'- 0"	9'- 4"	4	12"	7'- 5"	5	7½"	7'- 5"
12	8	10¼"	10¼"	8"	8"	49	49'- 0"	49	49'- 0"	6	6'- 0"	6	8"	49'- 8"	5	8"	51'- 0"	4	8"	3'-10¾"	7'- 6"	5	8"	3'-10¾"	5'- 4¼"	8'-11"	4	12"	9'- 5"	4	4½"	9'- 5"
12	10	10¼"	10¼"	8"	8"	49	49'- 0"	49	49'- 0"	8	8'- 0"	6	10"	49'- 8"	6	10"	51'- 0"	4	10"	3'-10¾"	7'- 6"	6	10"	4'- 5"	6'- 8"	10'- 8"	4	10"	11'- 5"	5	7½"	11'- 5"
12	12	10"	10"	8"	8"	49	49'- 0"	49	49'- 0"	10	10'- 0"	6	9"	49'- 8"	6	9"	51'- 0"	4	9"	4'- 1"	7'-11"	6	9"	4'- 5"	7'- 8"	11'- 8"	5	9"	13'- 4"	6	9½"	13'- 4"

A COPY OF THE ORIGINAL SEALED AND SIGNED DRAWING IS ON FILE IN THE CENTRAL OFFICE.

VDOT
ROAD AND BRIDGE STANDARDS

SHEET 1 OF 2 | REVISION DATE
1005.07 | 07/11

QUADRUPLE BOX CULVERTS

2 TO 5 FT. FILLS

VIRGINIA DEPARTMENT OF TRANSPORTATION

SPECIFICATION REFERENCE

BCQ-05

FOR TYPICAL SECTION, NOTES AND OTHER DETAILS, REFER TO STANDARD BCQ-DT.

SPAN (FT.)	HGHT (FT.)	REINFORCING STEEL BT1 SIZE	SPACING c-c	a	b	c	d	e	f	g	LENGTH	NO. BL1 #4 BARS	NO. BL2 #3 BARS	REINFORCING STEEL (LBS/LONG. JT)	QUAN./LF CONCRETE CLASS A4 (CY/LF)	REINFORCING STEEL (LBS/LF)	HEADWALLS G HEADWALL LENGTH	HW1 SIZE	HW1 LENGTH	NO. HW2 BARS	NO. HW3 BARS	INLET CONCRETE CL. A4 (CY)	INLET REINFORCING STEEL (LBS)	OUTLET CONCRETE CL. A4 (CY)	OUTLET REINFORCING STEEL (LBS)	WINGWALL
3	3	4	12"	2'- 8⅞"	0'- 4½"	1'- 6⅝"	0'- 5⅞"	0'- 3¾"	14'-11⅞"	1'- 5⅞"	15'- 9"	60	20	57.160	1.284	141.899	16'-10"	6	16'- 6"	3	12	2.222	137.876	2.191	99.132	A
3	4	4	12"	2'- 8⅞"	0'- 4½"	1'- 6⅝"	0'- 5⅞"	0'- 3¾"	14'-11⅞"	1'- 5⅞"	15'- 9"	60	30	60.690	1.406	152.339	16'-10"	6	16'- 6"	3	15	2.333	148.230	2.284	99.132	C
4	3	4	12"	3'- 6½"	0'- 4½"	1'-11½"	0'- 5⅞"	0'- 3¾"	19'- 0"	2'- 1"	19'- 9"	76	20	70.520	1.479	168.508	20'-10"	6	20'- 6"	3	12	2.626	161.908	2.609	123.164	A
4	4	4	12"	3'- 6½"	0'- 4½"	1'-11½"	0'- 5⅞"	0'- 3¾"	19'- 0"	2'- 1"	19'- 9"	76	30	74.050	1.601	190.527	20'-10"	6	20'- 6"	3	15	2.738	172.262	2.702	123.164	C
4	5	4	12"	3'- 6½"	0'- 4½"	1'-11½"	0'- 5⅞"	0'- 3¾"	19'- 0"	2'- 1"	19'- 9"	76	40	77.580	1.723	209.164	20'-10"	6	20'- 6"	3	18	2.849	182.616	2.794	123.164	E
4	6	4	12"	3'- 6½"	0'- 4½"	1'-11½"	0'- 5⅞"	0'- 3¾"	19'- 0"	2'- 1"	19'- 9"	76	50	81.110	1.845	223.366	20'-10"	6	20'- 6"	3	21	2.960	192.970	2.887	123.164	G
5	3	4	12"	4'- 4⅛"	0'- 4½"	2'- 4¼"	0'- 5⅞"	0'- 3¾"	23'- 0"	2'- 8¼"	23'- 9"	92	20	83.880	1.674	208.031	24'-10"	6	24'- 6"	3	12	3.031	185.940	3.027	147.196	A
5	4	4	12"	4'- 4⅛"	0'- 4½"	2'- 4¼"	0'- 5⅞"	0'- 3¾"	23'- 0"	2'- 8¼"	23'- 9"	92	30	87.410	1.796	222.479	24'-10"	6	24'- 6"	3	15	3.142	196.294	3.120	147.196	C
5	5	4	12"	4'- 4⅛"	0'- 4½"	2'- 4¼"	0'- 5⅞"	0'- 3¾"	23'- 0"	2'- 8¼"	23'- 9"	92	40	90.940	1.919	233.721	24'-10"	6	24'- 6"	3	18	3.254	206.648	3.212	147.196	E
5	6	4	12"	4'- 4⅛"	0'- 4½"	2'- 4¼"	0'- 5⅞"	0'- 3¾"	23'- 0"	2'- 8¼"	23'- 9"	92	50	94.470	2.041	253.896	24'-10"	6	24'- 6"	3	21	3.365	217.002	3.305	147.196	G
5	7	4	12"	4'- 4⅛"	0'- 4½"	2'- 4¼"	0'- 5⅞"	0'- 3¾"	23'- 0"	2'- 8¼"	23'- 9"	92	60	98.000	2.163	267.779	24'-10"	6	24'- 6"	3	24	3.476	227.356	3.398	147.196	I
6	4	4	12"	5'- 1¾"	0'- 4½"	2'- 9"	0'- 5⅞"	0'- 3¾"	27'- 0"	3'- 3½"	27'- 9"	108	30	100.770	1.991	254.634	28'-10"	6	28'- 6"	3	15	3.547	220.326	3.537	171.228	C
6	5	4	12"	5'- 1¾"	0'- 4½"	2'- 9"	0'- 5⅞"	0'- 3¾"	27'- 0"	3'- 3½"	27'- 9"	108	40	104.300	2.113	271.240	28'-10"	6	28'- 6"	3	18	3.658	230.680	3.630	171.228	E
6	6	4	12"	5'- 1¾"	0'- 4½"	2'- 9"	0'- 5⅞"	0'- 3¾"	27'- 0"	3'- 3½"	27'- 9"	108	50	107.830	2.236	287.643	28'-10"	6	28'- 6"	3	21	3.770	241.034	3.723	171.228	G
6	7	4	11"	5'- 1¾"	0'- 4½"	2'- 9"	0'- 5⅞"	0'- 3¾"	27'- 0"	3'- 3½"	27'- 9"	108	60	111.360	2.357	315.391	28'-10"	6	28'- 6"	3	24	3.881	251.388	3.816	171.228	I
6	8	4	11"	5'- 1¾"	0'- 4½"	2'- 9"	0'- 5⅞"	0'- 3¾"	27'- 0"	3'- 3½"	27'- 9"	108	70	114.890	2.478	348.013	28'-10"	6	28'- 6"	3	27	3.992	261.742	3.908	171.228	K
7	4	4	8"	5'-11⅜"	0'- 4½"	3'- 1⅞"	0'- 5⅞"	0'- 3¾"	31'- ⅛"	3'-10⅝"	31'-10"	124	30	114.130	2.179	375.974	32'-10"	6	32'- 6"	3	15	3.952	244.358	3.955	195.260	C
7	6	4	8"	5'-11⅜"	0'- 4½"	3'- 1⅞"	0'- 5⅞"	0'- 3¾"	31'- ⅛"	3'-10⅝"	31'-10"	124	50	121.190	2.424	411.704	32'-10"	6	32'- 6"	3	21	4.174	265.066	4.141	195.260	G
7	8	4	8"	5'-11⅜"	0'- 4½"	3'- 1⅞"	0'- 5⅞"	0'- 3¾"	31'- ⅛"	3'-10⅝"	31'-10"	124	70	128.250	2.668	446.891	32'-10"	6	32'- 6"	3	27	4.397	285.774	4.326	195.260	K
7	10	4	8"	5'-11⅜"	0'- 4½"	3'- 1⅞"	0'- 5⅞"	0'- 3¾"	31'- ⅛"	3'-10⅝"	31'-10"	124	90	135.310	2.912	490.787	32'-10"	6	32'- 6"	3	33	4.620	306.482	4.512	195.260	O
8	4	5	10"	6'- 8⅞"	0'- 4⅝"	3'- 6⅝"	0'- 6"	0'- 3¾"	34'-11⅞"	4'- 5⅞"	35'- 9"	140	30	127.490	2.370	469.730	36'-10"	6	36'- 6"	3	15	4.356	268.390	4.373	219.292	C
8	6	5	11"	6'- 8¾"	0'- 4⅞"	3'- 6⅜"	0'- 6¼"	0'- 4"	34'-11⅞"	4'- 5⅝"	35'- 9"	140	50	134.550	2.670	482.589	36'-10"	6	36'- 6"	3	21	4.557	289.098	4.536	219.292	G
8	8	5	11"	6'- 8¾"	0'- 4⅞"	3'- 6⅜"	0'- 6¼"	0'- 4"	34'-11⅞"	4'- 5⅝"	35'- 9"	140	70	141.610	2.910	573.014	36'-10"	6	36'- 6"	3	27	4.779	309.806	4.722	219.292	K
8	10	5	10"	6'- 8⅝"	0'- 5⅛"	3'- 6⅛"	0'- 6⅝"	0'- 4¼"	34'-11⅞"	4'- 5⅜"	35'-10"	140	90	148.670	3.210	593.975	36'-10"	6	36'- 6"	3	33	4.980	330.514	4.885	219.292	O
9	4	5	9"	7'- 6¼"	0'- 5⅛"	3'-11"	0'- 6⅝"	0'- 4¼"	39'- 0"	5'- ½"	39'-10"	156	30	140.850	2.683	551.081	40'-10"	6	40'- 6"	3	15	4.710	292.422	4.740	243.324	C
9	6	5	9"	7'- 6¼"	0'- 5⅛"	3'-11"	0'- 6⅝"	0'- 4¼"	39'- 0"	5'- ½"	39'-10"	156	50	147.910	2.927	589.585	40'-10"	6	40'- 6"	3	21	4.933	313.130	4.926	243.324	G
9	8	5	9"	7'- 6¼"	0'- 5⅛"	3'-11"	0'- 6⅝"	0'- 4¼"	39'- 0"	5'- ½"	39'-10"	156	70	154.970	3.171	624.975	40'-10"	6	40'- 6"	3	27	5.156	333.838	5.111	243.324	K
9	10	5	9"	7'- 6"	0'- 5⅝"	3'-10½"	0'- 7⅜"	0'- 4¾"	39'- 0"	5'- 0"	40'- 0"	156	90	162.030	3.536	665.872	40'-10"	6	40'- 6"	3	33	5.327	354.546	5.246	243.324	O
9	12	6	12"	7'- 6"	0'- 5¾"	3'-10½"	0'- 7½"	0'- 4¾"	39'- 0"	5'- 0"	39'-11"	156	110	169.090	3.777	741.709	40'-10"	6	40'- 6"	3	39	5.550	375.254	5.431	243.324	S
10	4	6	12"	8'- 3⅝"	0'- 5¾"	4'- 3¼"	0'- 7½"	0'- 4¾"	43'- 0"	5'- 7¼"	43'-11"	172	30	154.210	3.020	638.478	44'-10"	6	44'- 6"	3	15	5.052	316.454	5.095	267.356	C
10	6	6	12"	8'- 3⅝"	0'- 5¾"	4'- 3¼"	0'- 7½"	0'- 4¾"	43'- 0"	5'- 7¼"	43'-11"	172	50	161.270	3.263	679.789	44'-10"	6	44'- 6"	3	21	5.274	337.162	5.280	267.356	G
10	8	5	8"	8'- 3½"	0'- 5⅞"	4'- 3"	0'- 7¾"	0'- 5"	43'- 0"	5'- 7"	44'- 0"	172	70	168.330	3.572	743.548	44'-10"	6	44'- 6"	3	27	5.487	357.870	5.456	267.356	L
10	10	6	11"	8'- 3⅜"	0'- 6¼"	4'- 2¾"	0'- 8⅛"	0'- 5¼"	43'- 0"	5'- 6¾"	44'- 0"	172	90	175.390	3.882	793.552	44'-10"	6	44'- 6"	3	33	5.681	378.578	5.613	267.356	P
10	12	6	11"	8'- 3¼"	0'- 6½"	4'- 2½"	0'- 8½"	0'- 5½"	43'- 0"	5'- 6½"	44'- 1"	172	110	182.450	4.192	850.755	44'-10"	6	44'- 6"	3	39	5.875	399.286	5.770	267.356	T
12	6	6	12"	9'-10⅛"	0'- 7¼"	4'-11⅜"	0'- 9⅝"	0'- 6¼"	51'- ⅛"	6'- 8⅛"	52'- 3"	204	50	187.990	4.175	782.755	52'-10"	6	52'- 6"	3	21	5.869	385.226	5.902	315.420	H
12	8	5	8"	9'-10¼"	0'- 6⅞"	4'-11⅝"	0'- 9⅛"	0'- 6"	51'- ⅛"	6'- 8⅜"	52'- 3"	204	70	195.050	4.332	932.213	52'-10"	6	52'- 6"	3	27	6.127	405.934	6.122	315.420	L
12	10	6	10"	9'-10¼"	0'- 7"	4'-11⅝"	0'- 9¼"	0'- 6"	51'- ⅛"	6'- 8⅜"	52'- 3"	204	90	202.110	4.576	966.832	52'-10"	6	52'- 6"	3	33	6.349	426.642	6.308	315.420	P
12	12	6	9"	9'-10⅜"	0'- 6¾"	4'-11⅞"	0'- 8⅞"	0'- 5¾"	51'- ⅛"	6'- 8⅝"	52'- 2"	204	110	209.170	4.733	1112.599	52'-10"	6	52'- 6"	3	39	6.607	447.350	6.528	315.420	T

A COPY OF THE ORIGINAL SEALED AND SIGNED DRAWING IS ON FILE IN THE CENTRAL OFFICE.

SPECIFICATION REFERENCE

QUADRUPLE BOX CULVERTS

2 TO 5 FT. FILLS

VIRGINIA DEPARTMENT OF TRANSPORTATION

VDOT

ROAD AND BRIDGE STANDARDS

REVISION DATE 08/14

SHEET 2 OF 2

1005.08

BCQ-10

FOR TYPICAL SECTION, NOTES AND OTHER DETAILS, REFER TO STANDARD BCQ-DT.

DIMENSIONS						REINFORCING STEEL																										
SPAN	HGHT	T1	T2	T3	T4							BH1			BH2			BH3				BH4					BV1			BV2		
(FT.)	(FT.)	TOP SLAB	BOTTOM SLAB	EXTERIOR WALL (IN.)	INTERIOR WALL (IN.)	A	B	C	D	E	F	SIZE	SPACING C-C	LENGTH	SIZE	SPACING C-C	LENGTH	SIZE	SPACING C-C	a	LENGTH	SIZE	SPACING C-C	a	b	LENGTH	SIZE	SPACING C-C	LENGTH	SIZE	SPACING C-C	LENGTH
3	3	8"	8"	8"	8"	13	13'- 0"	13	13'- 0"	1	1'- 0"	4	12"	14'-10"	4	12"	15'- 0"	--	---	-----	-----	4	12"	2'- 1¼"	2'- 8"	4'- 6"	4	12"	4'- 0"	4	12"	4'- 0"
3	4	8"	8"	8"	8"	13	13'- 0"	13	13'- 0"	2	2'- 0"	4	12"	14'-10"	4	12"	15'- 0"	--	---	-----	-----	4	12"	2'- 1¼"	3'- 2"	5'- 0"	4	12"	5'- 0"	4	12"	5'- 0"
4	3	8"	8"	8"	8"	17	17'- 0"	17	17'- 0"	1	1'- 0"	4	12"	18'- 5"	4	12"	19'- 0"	--	---	-----	-----	4	12"	2'- 3⅝"	2'- 8"	4'- 8"	4	12"	4'- 0"	4	12"	4'- 0"
4	4	8"	8"	8"	8"	17	17'- 0"	17	17'- 0"	2	2'- 0"	4	12"	18'- 5"	4	12"	19'- 0"	--	---	-----	-----	4	12"	2'- 3⅝"	3'- 2"	5'- 2"	4	12"	5'- 0"	4	12"	5'- 0"
4	5	8"	8"	8"	8"	17	17'- 0"	17	17'- 0"	3	3'- 0"	4	12"	18'- 5"	4	12"	19'- 0"	--	---	-----	-----	4	12"	2'- 3⅝"	3'- 8"	5'- 8"	4	12"	6'- 0"	4	12"	6'- 0"
4	6	8"	8"	8"	8"	17	17'- 0"	17	17'- 0"	4	4'- 0"	4	12"	18'- 5"	4	12"	19'- 0"	--	---	-----	-----	4	12"	2'- 3⅝"	4'- 2"	6'- 2"	4	12"	7'- 0"	4	12"	7'- 0"
5	3	8"	8"	8"	8"	21	21'- 0"	21	21'- 0"	1	1'- 0"	4	12"	22'- 0"	4	12"	23'- 0"	--	---	-----	-----	4	12"	2'- 6"	2'- 8"	4'-11"	4	12"	4'- 0"	4	12"	4'- 0"
5	4	8"	8"	8"	8"	21	21'- 0"	21	21'- 0"	2	2'- 0"	4	12"	22'- 0"	4	12"	23'- 0"	--	---	-----	-----	4	12"	2'- 6"	3'- 2"	5'- 5"	4	12"	5'- 0"	4	12"	5'- 0"
5	5	8"	8"	8"	8"	21	21'- 0"	21	21'- 0"	3	3'- 0"	4	12"	22'- 0"	4	12"	23'- 0"	--	---	-----	-----	4	12"	2'- 6"	3'- 8"	5'-11"	4	12"	6'- 0"	4	12"	6'- 0"
5	6	8"	8"	8"	8"	21	21'- 0"	21	21'- 0"	4	4'- 0"	4	12"	22'- 0"	4	12"	23'- 0"	--	---	-----	-----	4	12"	2'- 6"	4'- 2"	6'- 5"	4	12"	7'- 0"	4	12"	7'- 0"
5	7	8"	8"	8"	8"	21	21'- 0"	21	21'- 0"	5	5'- 0"	4	12"	22'- 0"	4	12"	23'- 0"	--	---	-----	-----	4	12"	2'- 6"	4'- 8"	6'-11"	4	12"	8'- 0"	4	12"	8'- 0"
6	4	8"	8"	8"	8"	25	25'- 0"	25	25'- 0"	2	2'- 0"	4	12"	25'-11"	4	12"	27'- 0"	4	12"	2'- 8⅜"	5'- 2"	4	12"	2'- 8⅜"	3'- 2"	5'- 7"	4	12"	5'- 0"	4	12"	5'- 0"
6	5	8"	8"	8"	8"	25	25'- 0"	25	25'- 0"	3	3'- 0"	4	12"	25'-11"	4	12"	27'- 0"	4	12"	2'- 8⅜"	5'- 2"	4	12"	2'- 8⅜"	3'- 8"	6'- 1"	4	12"	6'- 0"	4	12"	6'- 0"
6	6	8"	8"	8"	8"	25	25'- 0"	25	25'- 0"	4	4'- 0"	4	12"	25'-11"	4	12"	27'- 0"	4	12"	2'- 8⅜"	5'- 2"	4	12"	2'- 8⅜"	4'- 2"	6'- 7"	4	12"	7'- 0"	4	12"	7'- 0"
6	7	8"	8"	8"	8"	25	25'- 0"	25	25'- 0"	5	5'- 0"	4	12"	25'-11"	4	12"	27'- 0"	4	12"	2'-11"	5'- 8"	4	12"	2'- 8⅜"	4'- 8"	7'- 1"	4	12"	8'- 0"	4	12"	8'- 0"
6	8	8"	8"	8"	8"	25	25'- 0"	25	25'- 0"	6	6'- 0"	4	12"	25'-11"	4	12"	27'- 0"	4	12"	3'- 2"	6'- 2"	4	12"	2'- 8⅜"	5'- 2"	7'- 7"	4	12"	9'- 0"	4	12"	9'- 0"
7	4	8"	8"	8"	8"	29	29'- 0"	29	29'- 0"	2	2'- 0"	4	12"	29'- 8"	4	12"	31'- 0"	--	---	-----	-----	5	12"	2'-10¾"	3'- 2"	5'- 9"	4	12"	5'- 0"	4	12"	5'- 0"
7	6	8"	8"	8"	8"	29	29'- 0"	29	29'- 0"	4	4'- 0"	4	12"	29'- 8"	4	12"	31'- 0"	--	---	-----	-----	5	12"	2'-10¾"	4'- 2"	6'- 9"	4	12"	7'- 0"	4	12"	7'- 0"
7	8	8"	8"	8"	8"	29	29'- 0"	29	29'- 0"	6	6'- 0"	4	12"	29'- 8"	4	12"	31'- 0"	--	---	-----	-----	5	12"	2'-10¾"	5'- 2"	7'- 9"	4	12"	9'- 0"	4	11½"	9'- 0"
7	10	8"	8"	8"	8"	29	29'- 0"	29	29'- 0"	8	8'- 0"	4	11"	29'- 8"	4	11"	31'- 0"	--	---	-----	-----	5	11"	2'-10¾"	6'- 2"	8'- 9"	5	10"	11'- 0"	4	12"	11'- 0"
8	4	8¼"	8¼"	8"	8"	33	33'- 0"	33	33'- 0"	2	2'- 0"	4	11"	33'- 8"	4	11"	35'- 0"	3	11"	3'- 1¼"	6'- 0"	5	11"	3'- 1¼"	3'- 2¼"	6'- 0"	4	9"	5'- 0"	4	12"	5'- 0"
8	6	8½"	8½"	8"	8"	33	33'- 0"	33	33'- 0"	4	4'- 0"	4	11"	33'- 8"	4	11"	35'- 0"	--	---	-----	-----	5	11"	3'- 1¼"	4'- 2½"	7'- 0"	4	12"	7'- 1"	4	12"	7'- 1"
8	8	8½"	8½"	8"	8"	33	33'- 0"	33	33'- 0"	6	6'- 0"	4	10"	33'- 8"	4	10"	35'- 0"	--	---	-----	-----	5	10"	3'- 1¼"	5'- 2½"	8'- 0"	4	12"	9'- 1"	4	12"	9'- 1"
8	10	8¾"	8¾"	8"	8"	33	33'- 0"	33	33'- 0"	8	8'- 0"	4	9"	33'- 8"	4	9"	35'- 0"	--	---	-----	-----	5	9"	3'- 1¼"	6'- 2¾"	9'- 0"	5	11"	11'- 2"	4	12"	11'- 2"
9	4	9"	9"	8"	8"	37	37'- 0"	37	37'- 0"	2	2'- 0"	5	9"	37'-11"	4	9"	39'- 0"	3	9"	3'- 3⅝"	6'- 5"	5	9"	3'- 3⅝"	3'- 3"	6'- 3"	4	8"	5'- 2"	4	12"	5'- 2"
9	6	9¼"	9¼"	8"	8"	37	37'- 0"	37	37'- 0"	4	4'- 0"	5	9"	37'-11"	4	9"	39'- 0"	--	---	-----	-----	5	9"	3'- 3⅝"	4'- 3¼"	7'- 3"	4	12"	7'- 2"	4	12"	7'- 2"
9	8	9½"	9½"	8"	8"	37	37'- 0"	37	37'- 0"	6	6'- 0"	5	9"	37'-11"	4	9"	39'- 0"	4	9"	3'- 3⅝"	6'- 4"	4	9"	3'- 3⅝"	5'- 3½"	8'- 4"	4	12"	9'- 3"	4	12"	9'- 3"
9	10	9½"	9½"	8"	8"	37	37'- 0"	37	37'- 0"	8	8'- 0"	5	9"	37'-11"	5	9"	39'- 0"	--	---	-----	-----	5	9"	3'- 3⅝"	6'- 3½"	9'- 3"	5	12"	11'- 3"	4	12"	11'- 3"
9	12	9¾"	9¾"	8"	8"	37	37'- 0"	37	37'- 0"	10	10'- 0"	4	8"	37'-11"	4	8"	39'- 0"	4	8"	4'- 1"	7'-11"	5	8"	3'- 3⅝"	7'- 3¾"	10'- 3"	5	6"	13'- 3"	4	12"	13'- 3"
10	4	9¾"	9¾"	8"	8"	41	41'- 0"	41	41'- 0"	2	2'- 0"	5	8"	41'-11"	4	8"	43'- 0"	--	---	-----	-----	5	8"	3'- 6"	3'- 3¾"	6'- 6"	4	7"	5'- 3"	4	12"	5'- 3"
10	6	10"	10"	8"	8"	41	41'- 0"	41	41'- 0"	4	4'- 0"	5	8"	41'-11"	4	8"	43'- 0"	--	---	-----	-----	5	8"	3'- 6"	4'- 4"	7'- 6"	4	11½"	7'- 4"	4	12"	7'- 4"
10	8	10¼"	10¼"	8"	8"	41	41'- 0"	41	41'- 0"	6	6'- 0"	5	8"	41'-11"	4	8"	43'- 0"	4	8"	3'- 6"	6'- 9"	4	8"	3'- 6"	5'- 4¼"	8'- 7"	4	12"	9'- 5"	4	12"	9'- 5"
10	10	10¼"	10¼"	8"	8"	41	41'- 0"	41	41'- 0"	8	8'- 0"	5	8"	41'-11"	5	8"	43'- 0"	--	---	-----	-----	5	8"	3'- 6"	6'- 4¼"	9'- 6"	5	12"	11'- 5"	4	12"	11'- 5"
10	12	10½"	10½"	8"	8"	41	41'- 0"	41	41'- 0"	10	10'- 0"	5	10"	41'-11"	5	10"	43'- 0"	3	10"	4'- 1"	7'-11"	6	10"	4'- 0"	7'- 8"	11'- 4"	5	7"	13'- 5"	4	12"	13'- 5"
12	6	11¾"	11¾"	8"	8"	49	49'- 0"	49	49'- 0"	4	4'- 0"	6	12"	49'- 8"	6	12"	51'- 0"	3	12"	3'-10¾"	7'- 7"	6	12"	4'- 5"	4'- 9"	8'-10"	4	10"	7'- 8"	4	10"	7'- 8"
12	8	11¾"	11¾"	8"	8"	49	49'- 0"	49	49'- 0"	6	6'- 0"	6	11"	49'- 8"	6	11"	51'- 0"	--	---	-----	-----	6	11"	4'- 5"	5'- 9"	9'-10"	4	12"	9'- 8"	4	12"	9'- 8"
12	10	12"	12"	8"	8"	49	49'- 0"	49	49'- 0"	8	8'- 0"	6	9"	49'- 8"	5	9"	51'- 0"	3	9"	3'-10¾"	7'- 7"	5	9"	3'-10¾"	6'- 6"	10'- 1"	5	12"	11'- 8"	4	12"	11'- 8"
12	12	12¼"	12¼"	8"	8"	49	49'- 0"	49	49'- 0"	10	10'- 0"	6	9"	49'- 8"	5	9"	51'- 0"	--	---	-----	-----	6	9"	4'- 5"	7'-10"	11'-10"	6	10½"	13'- 9"	4	12"	13'- 9"

A COPY OF THE ORIGINAL SEALED AND SIGNED DRAWING IS ON FILE IN THE CENTRAL OFFICE.

VDOT
ROAD AND BRIDGE STANDARDS

SHEET 1 OF 2 | REVISION DATE
1005.09 | 07/11

QUADRUPLE BOX CULVERTS

5 TO 10 FT. FILLS

VIRGINIA DEPARTMENT OF TRANSPORTATION

SPECIFICATION REFERENCE

BCQ-10

FOR TYPICAL SECTION, NOTES AND OTHER DETAILS, REFER TO STANDARD BCQ-DT.

SPAN (FT.)	HGHT (FT.)	REINFORCING STEEL BT1 SIZE	SPACING c-c	a	b	c	d	e	f	g	LENGTH	NO. BL1 #4 BARS	NO. BL2 #3 BARS	REINFORCING STEEL (LBS/LONG. JT)	QUAN./LF CONCRETE CLASS A4 (CY/LF)	REINFORCING STEEL (LBS/LF)	HEADWALLS G HEADWALL LENGTH	HW1 SIZE	HW1 LENGTH	NO. HW2 BARS	NO. HW3 BARS	INLET CONCRETE CL. A4 (CY)	INLET REINFORCING STEEL (LBS)	OUTLET CONCRETE CL. A4 (CY)	OUTLET REINFORCING STEEL (LBS)	WINGWALL
3	3	4	12"	2'- 8⅞"	0'- 4½"	1'- 6⅝"	0'- 5⅞"	0'- 3¾"	14'-11⅞"	1'- 5⅞"	15'- 9"	60	20	57.160	1.284	141.899	16'-10"	6	16'- 6"	3	12	2.222	137.876	2.191	99.132	A
3	4	4	12"	2'- 8⅞"	0'- 4½"	1'- 6⅝"	0'- 5⅞"	0'- 3¾"	14'-11⅞"	1'- 5⅞"	15'- 9"	60	30	60.690	1.406	152.339	16'-10"	6	16'- 6"	3	15	2.333	148.230	2.284	99.132	C
4	3	4	12"	3'- 6½"	0'- 4½"	1'-11½"	0'- 5⅞"	0'- 3¾"	19'- 0"	2'- 1"	19'- 9"	76	20	70.520	1.479	168.508	20'-10"	6	20'- 6"	3	12	2.626	161.908	2.609	123.164	A
4	4	4	12"	3'- 6½"	0'- 4½"	1'-11½"	0'- 5⅞"	0'- 3¾"	19'- 0"	2'- 1"	19'- 9"	76	30	74.050	1.602	178.948	20'-10"	6	20'- 6"	3	15	2.738	172.262	2.702	123.164	C
4	5	4	12"	3'- 6½"	0'- 4½"	1'-11½"	0'- 5⅞"	0'- 3¾"	19'- 0"	2'- 1"	19'- 9"	76	40	77.580	1.724	189.388	20'-10"	6	20'- 6"	3	18	2.849	182.616	2.794	123.164	E
4	6	4	12"	3'- 6½"	0'- 4½"	1'-11½"	0'- 5⅞"	0'- 3¾"	19'- 0"	2'- 1"	19'- 9"	76	50	81.110	1.847	199.828	20'-10"	6	20'- 6"	3	21	2.960	192.970	2.887	123.164	G
5	3	4	12"	4'- 4⅛"	0'- 4½"	2'- 4¼"	0'- 5⅞"	0'- 3¾"	23'- 0"	2'- 8¼"	23'- 9"	92	20	83.880	1.675	195.339	24'-10"	6	24'- 6"	3	12	3.031	185.940	3.027	147.196	A
5	4	4	12"	4'- 4⅛"	0'- 4½"	2'- 4¼"	0'- 5⅞"	0'- 3¾"	23'- 0"	2'- 8¼"	23'- 9"	92	30	87.410	1.797	205.779	24'-10"	6	24'- 6"	3	15	3.142	196.294	3.120	147.196	C
5	5	4	12"	4'- 4⅛"	0'- 4½"	2'- 4¼"	0'- 5⅞"	0'- 3¾"	23'- 0"	2'- 8¼"	23'- 9"	92	40	90.940	1.920	216.219	24'-10"	6	24'- 6"	3	18	3.254	206.648	3.212	147.196	E
5	6	4	12"	4'- 4⅛"	0'- 4½"	2'- 4¼"	0'- 5⅞"	0'- 3¾"	23'- 0"	2'- 8¼"	23'- 9"	92	50	94.470	2.043	226.659	24'-10"	6	24'- 6"	3	21	3.365	217.002	3.305	147.196	G
5	7	4	12"	4'- 4⅛"	0'- 4½"	2'- 4¼"	0'- 5⅞"	0'- 3¾"	23'- 0"	2'- 8¼"	23'- 9"	92	60	98.000	2.165	237.099	24'-10"	6	24'- 6"	3	24	3.476	227.356	3.398	147.196	I
6	4	4	12"	5'- 1¾"	0'- 4½"	2'- 9"	0'- 5⅞"	0'- 3¾"	27'- 0"	3'- 3½"	27'- 9"	108	30	100.770	1.991	253.889	28'-10"	6	28'- 6"	3	15	3.547	220.326	3.537	171.228	C
6	5	4	12"	5'- 1¾"	0'- 4½"	2'- 9"	0'- 5⅞"	0'- 3¾"	27'- 0"	3'- 3½"	27'- 9"	108	40	104.300	2.114	264.643	28'-10"	6	28'- 6"	3	18	3.658	230.680	3.630	171.228	E
6	6	4	12"	5'- 1¾"	0'- 4½"	2'- 9"	0'- 5⅞"	0'- 3¾"	27'- 0"	3'- 3½"	27'- 9"	108	50	107.830	2.236	275.397	28'-10"	6	28'- 6"	3	21	3.770	241.034	3.723	171.228	G
6	7	4	12"	5'- 1¾"	0'- 4½"	2'- 9"	0'- 5⅞"	0'- 3¾"	27'- 0"	3'- 3½"	27'- 9"	108	60	111.360	2.359	287.512	28'-10"	6	28'- 6"	3	24	3.881	251.388	3.816	171.228	I
6	8	4	12"	5'- 1¾"	0'- 4½"	2'- 9"	0'- 5⅞"	0'- 3¾"	27'- 0"	3'- 3½"	27'- 9"	108	70	114.890	2.482	299.627	28'-10"	6	28'- 6"	3	27	3.992	261.742	3.908	171.228	K
7	4	4	12"	5'-11⅜"	0'- 4½"	3'- 1⅞"	0'- 5⅞"	0'- 3¾"	31'- ⅛"	3'-10⅝"	31'-10"	124	30	114.130	2.187	276.214	32'-10"	6	32'- 6"	3	15	3.952	244.358	3.955	195.260	C
7	6	4	12"	5'-11⅜"	0'- 4½"	3'- 1⅞"	0'- 5⅞"	0'- 3¾"	31'- ⅛"	3'-10⅝"	31'-10"	124	50	121.190	2.432	299.219	32'-10"	6	32'- 6"	3	21	4.174	265.066	4.141	195.260	G
7	8	4	12"	5'-11⅜"	0'- 4½"	3'- 1⅞"	0'- 5⅞"	0'- 3¾"	31'- ⅛"	3'-10⅝"	31'-10"	124	70	128.250	2.677	324.059	32'-10"	6	32'- 6"	3	27	4.397	285.774	4.326	195.260	K
7	10	4	11"	5'-11⅜"	0'- 4½"	3'- 1⅞"	0'- 5⅞"	0'- 3¾"	31'- ⅛"	3'-10⅝"	31'-10"	124	90	135.310	2.920	374.109	32'-10"	6	32'- 6"	3	33	4.620	306.482	4.512	195.260	O
8	4	4	11"	6'- 8¾"	0'- 4¾"	3'- 6⅜"	0'- 6¼"	0'- 4"	34'-11⅞"	4'- 5⅝"	35'-10"	140	30	127.490	2.435	333.672	36'-10"	6	36'- 6"	3	15	4.334	268.390	4.351	219.292	C
8	6	4	11"	6'- 8⅝"	0'- 5"	3'- 6⅛"	0'- 6½"	0'- 4¼"	34'-11⅞"	4'- 5⅜"	35'-10"	140	50	134.550	2.735	345.357	36'-10"	6	36'- 6"	3	21	4.534	289.098	4.514	219.292	G
8	8	4	10"	6'- 8⅝"	0'- 5"	3'- 6⅛"	0'- 6½"	0'- 4¼"	34'-11⅞"	4'- 5⅜"	35'-10"	140	70	141.610	2.979	386.268	36'-10"	6	36'- 6"	3	27	4.757	309.806	4.700	219.292	K
8	10	4	9"	6'- 8½"	0'- 5¼"	3'- 5⅞"	0'- 6⅞"	0'- 4½"	34'-11⅞"	4'- 5⅛"	35'-11"	140	90	148.670	3.276	447.410	36'-10"	6	36'- 6"	3	33	4.957	330.514	4.863	219.292	O
9	4	4	9"	7'- 6"	0'- 5½"	3'-10½"	0'- 7¼"	0'- 4¾"	39'- 0"	5'- 0"	40'- 0"	156	30	140.850	2.812	451.848	40'-10"	6	40'- 6"	3	15	4.659	292.422	4.689	243.324	C
9	6	4	9"	7'- 5⅞"	0'- 5¾"	3'-10¼"	0'- 7⅝"	0'- 5"	39'- 0"	4'-11¾"	40'- 0"	156	50	147.910	3.119	459.598	40'-10"	6	40'- 6"	3	21	4.875	313.130	4.868	243.324	H
9	8	4	9"	7'- 5¾"	0'- 6"	3'-10"	0'- 8"	0'- 5¼"	39'- 0"	4'-11½"	40'- 1"	156	70	154.970	3.424	492.432	40'-10"	6	40'- 6"	3	27	5.072	333.838	5.028	243.324	L
9	10	4	9"	7'- 5¾"	0'- 6"	3'-10"	0'- 8"	0'- 5¼"	39'- 0"	4'-11½"	40'- 1"	156	90	162.030	3.666	554.516	40'-10"	6	40'- 6"	3	33	5.295	354.546	5.213	243.324	P
9	12	4	8"	7'- 5⅝"	0'- 6¼"	3'- 9¾"	0'- 8⅜"	0'- 5½"	39'- 0"	4'-11¼"	40'- 2"	156	110	169.090	3.970	599.804	40'-10"	6	40'- 6"	3	39	5.492	375.254	5.373	243.324	T
10	4	4	8"	8'- 3¼"	0'- 6¼"	4'- 2½"	0'- 8⅜"	0'- 5½"	43'- 0"	5'- 6½"	44'- 2"	172	30	154.210	3.229	519.693	44'-10"	6	44'- 6"	3	15	4.985	316.454	5.028	267.356	D
10	6	4	8"	8'- 3⅛"	0'- 6½"	4'- 2¼"	0'- 8⅝"	0'- 5¾"	43'- 0"	5'- 6¼"	44'- 2"	172	50	161.270	3.541	540.827	44'-10"	6	44'- 6"	3	21	5.179	337.162	5.185	267.356	H
10	8	4	8"	8'- 3"	0'- 6¾"	4'- 2"	0'- 9"	0'- 6"	43'- 0"	5'- 6"	44'- 3"	172	70	168.330	3.853	574.370	44'-10"	6	44'- 6"	3	27	5.373	357.870	5.342	267.356	L
10	10	4	8"	8'- 3"	0'- 6¾"	4'- 2"	0'- 9"	0'- 6"	43'- 0"	5'- 6"	44'- 3"	172	90	175.390	4.094	649.612	44'-10"	6	44'- 6"	3	33	5.595	378.578	5.527	267.356	P
10	12	5	10"	8'- 2⅞"	0'- 7⅛"	4'- 1¾"	0'- 9½"	0'- 6¼"	43'- 0"	5'- 5¾"	44'- 3"	172	110	182.450	4.405	688.264	44'-10"	6	44'- 6"	3	39	5.790	399.286	5.684	267.356	T
12	6	6	12"	9'- 9½"	0'- 8½"	4'-10⅛"	0'-11⅜"	0'- 7½"	51'- ⅛"	6'- 6⅞"	52'- 6"	204	50	187.990	4.575	735.821	52'-10"	6	52'- 6"	3	21	5.696	385.226	5.728	315.420	H
12	8	6	11"	9'- 9½"	0'- 8½"	4'-10⅛"	0'-11⅜"	0'- 7½"	51'- ⅛"	6'- 6⅞"	52'- 6"	204	70	195.050	4.818	787.944	52'-10"	6	52'- 6"	3	27	5.918	405.934	5.914	315.420	L
12	10	5	9"	9'- 9⅜"	0'- 8⅝"	4'- 9⅞"	0'-11⅝"	0'- 7¾"	51'- ⅛"	6'- 6⅝"	52'- 7"	204	90	202.110	5.142	811.072	52'-10"	6	52'- 6"	3	33	6.106	426.642	6.065	315.420	P
12	12	5	9"	9'- 9¼"	0'- 8⅞"	4'- 9⅝"	1'- 0"	0'- 8"	51'- ⅛"	6'- 6⅜"	52'- 8"	204	110	209.170	5.464	873.156	52'-10"	6	52'- 6"	3	39	6.294	447.350	6.215	315.420	T

A COPY OF THE ORIGINAL SEALED AND SIGNED DRAWING IS ON FILE IN THE CENTRAL OFFICE.

SPECIFICATION REFERENCE

QUADRUPLE BOX CULVERTS

5 TO 10 FT. FILLS

VIRGINIA DEPARTMENT OF TRANSPORTATION

VDOT

ROAD AND BRIDGE STANDARDS

REVISION DATE 07/13

SHEET 2 OF 2

1005.10

BCQ-20

FOR TYPICAL SECTION, NOTES AND OTHER DETAILS, REFER TO STANDARD BCQ-DT.

DIMENSIONS						REINFORCING STEEL																										
SPAN	HGHT	T1	T2	T3	T4							BH1			BH2			BH3				BH4					BV1			BV2		
(FT.)	(FT.)	TOP SLAB	BOTTOM SLAB	EXTERIOR WALL (IN.)	INTERIOR WALL (IN.)	A	B	C	D	E	F	SIZE	SPACING C-C	LENGTH	SIZE	SPACING C-C	LENGTH	SIZE	SPACING C-C	a	LENGTH	SIZE	SPACING C-C	a	b	LENGTH	SIZE	SPACING C-C	LENGTH	SIZE	SPACING C-C	LENGTH
3	3	8"	8"	8"	8"	13	13'- 0"	13	13'- 0"	1	1'- 0"	4	12"	13'- 11"	4	12"	15'- 0"	--	---	-----	-----	4	12"	2'- 4"	2'- 8"	4'- 9"	4	12"	4'- 0"	4	12"	4'- 0"
3	4	8"	8"	8"	8"	13	13'- 0"	13	13'- 0"	2	2'- 0"	4	12"	13'- 11"	4	12"	15'- 0"	--	---	-----	-----	4	12"	2'- 4"	3'- 2"	5'- 3"	4	12"	5'- 0"	4	12"	5'- 0"
4	3	8"	8"	8"	8"	17	17'- 0"	17	17'- 0"	1	1'- 0"	4	12"	17'- 11"	4	12"	19'- 0"	--	---	-----	-----	4	12"	2'- 4"	2'- 8"	4'- 9"	4	12"	4'- 0"	4	12"	4'- 0"
4	4	8"	8"	8"	8"	17	17'- 0"	17	17'- 0"	2	2'- 0"	4	12"	17'- 11"	4	12"	19'- 0"	--	---	-----	-----	4	12"	2'- 4"	3'- 2"	5'- 3"	4	12"	5'- 0"	4	12"	5'- 0"
4	5	8"	8"	8"	8"	17	17'- 0"	17	17'- 0"	3	3'- 0"	4	12"	17'- 11"	4	12"	19'- 0"	--	---	-----	-----	4	12"	2'- 4"	3'- 8"	5'- 9"	4	12"	6'- 0"	4	12"	6'- 0"
4	6	8"	8"	8"	8"	17	17'- 0"	17	17'- 0"	4	4'- 0"	4	12"	17'- 11"	4	12"	19'- 0"	--	---	-----	-----	4	12"	2'- 4"	4'- 2"	6'- 3"	4	12"	7'- 0"	4	12"	7'- 0"
5	3	8"	8"	8"	8"	21	21'- 0"	21	21'- 0"	1	1'- 0"	4	12"	21'- 11"	4	12"	23'- 0"	4	12"	2'- 6"	4'- 9"	4	12"	2'- 4"	2'- 8"	4'- 9"	4	12"	4'- 0"	4	12"	4'- 0"
5	4	8"	8"	8"	8"	21	21'- 0"	21	21'- 0"	2	2'- 0"	4	12"	21'- 11"	4	12"	23'- 0"	4	12"	2'- 6"	4'- 9"	4	12"	2'- 4"	3'- 2"	5'- 3"	4	12"	5'- 0"	4	12"	5'- 0"
5	5	8"	8"	8"	8"	21	21'- 0"	21	21'- 0"	3	3'- 0"	4	12"	21'- 11"	4	12"	23'- 0"	3	12"	2'- 6"	4'- 10"	4	12"	2'- 4"	3'- 8"	5'- 9"	4	12"	6'- 0"	4	12"	6'- 0"
5	6	8"	8"	8"	8"	21	21'- 0"	21	21'- 0"	4	4'- 0"	4	12"	21'- 11"	4	12"	23'- 0"	3	12"	2'- 9"	5'- 3"	4	12"	2'- 4"	4'- 2"	6'- 3"	4	12"	7'- 0"	4	12"	7'- 0"
5	7	8"	8"	8"	8"	21	21'- 0"	21	21'- 0"	5	5'- 0"	4	12"	21'- 11"	4	12"	23'- 0"	4	12"	2'- 11"	5'- 7"	4	12"	2'- 4"	4'- 8"	6'- 9"	5	12"	8'- 0"	4	12"	8'- 0"
6	4	9¼"	9¼"	8"	8"	25	25'- 0"	25	25'- 0"	2	2'- 0"	4	12"	25'- 11"	4	12"	27'- 0"	4	12"	2'- 9"	5'- 2"	4	12"	2'- 4"	3'- 4"	5'- 4"	4	12"	5'- 2"	4	12"	5'- 2"
6	5	9¼"	9¼"	8"	8"	25	25'- 0"	25	25'- 0"	3	3'- 0"	4	11"	25'- 11"	4	11"	27'- 0"	4	11"	2'- 9"	5'- 2"	4	11"	2'- 4"	3'- 10"	5'- 10"	4	12"	6'- 2"	4	12"	6'- 2"
6	6	9½"	9½"	8"	8"	25	25'- 0"	25	25'- 0"	4	4'- 0"	4	12"	25'- 11"	4	12"	27'- 0"	4	12"	2'- 10"	5'- 5"	4	12"	2'- 4"	4'- 4"	6'- 4"	4	12"	7'- 3"	4	12"	7'- 3"
6	7	9½"	9½"	8"	8"	25	25'- 0"	25	25'- 0"	5	5'- 0"	4	11"	25'- 11"	4	11"	27'- 0"	4	11"	3'- 1"	5'- 10"	4	11"	2'- 4"	4'- 10"	6'- 10"	4	12"	8'- 3"	4	12"	8'- 3"
6	8	9½"	9½"	8"	8"	25	25'- 0"	25	25'- 0"	6	6'- 0"	4	11"	25'- 8"	4	11"	27'- 0"	--	---	-----	-----	5	11"	2'- 6"	5'- 6"	7'- 7"	5	12"	9'- 3"	4	12"	9'- 3"
7	4	10½"	10½"	8"	8"	29	29'- 0"	29	29'- 0"	2	2'- 0"	4	10"	29'- 11"	4	10"	31'- 0"	3	10"	2'- 11"	5'- 8"	4	10"	2'- 4"	3'- 5"	5'- 5"	4	12"	5'- 5"	4	12"	5'- 5"
7	6	10¾"	10¾"	8"	8"	29	29'- 0"	29	29'- 0"	4	4'- 0"	4	10"	29'- 11"	4	10"	31'- 0"	3	10"	3'- 0"	5'- 8"	4	10"	2'- 4"	4'- 5"	6'- 6"	4	12"	7'- 5"	4	12"	7'- 5"
7	8	11"	11"	8"	8"	29	29'- 0"	29	29'- 0"	6	6'- 0"	4	10"	29'- 11"	4	10"	31'- 0"	3	10"	3'- 5"	6'- 7"	4	10"	2'- 4"	5'- 5"	7'- 6"	5	12"	9'- 6"	4	12"	9'- 6"
7	10	11¼"	11¼"	8"	8"	29	29'- 0"	29	29'- 0"	8	8'- 0"	4	10"	29'- 8"	4	10"	31'- 0"	3	10"	3'- 10"	7'- 5"	5	10"	2'- 6"	6'- 8"	8'- 9"	6	10½"	11'- 6"	4	12"	11'- 6"
8	4	12"	12"	8"	8"	33	33'- 0"	33	33'- 0"	2	2'- 0"	4	9"	33'- 11"	4	9"	35'- 0"	3	9"	3'- 2"	6'- 1"	4	9"	2'- 4"	3'- 6"	5'- 7"	4	12"	5'- 8"	4	12"	5'- 8"
8	6	12¼"	12¼"	8"	8"	33	33'- 0"	33	33'- 0"	4	4'- 0"	4	9"	33'- 11"	4	9"	35'- 0"	--	---	-----	-----	4	9"	2'- 4"	4'- 7"	6'- 7"	4	12"	7'- 8"	4	12"	7'- 8"
8	8	12¼"	12¼"	8"	8"	33	33'- 0"	33	33'- 0"	6	6'- 0"	5	9"	33'- 11"	5	9"	35'- 0"	3	9"	3'- 6"	6'- 9"	4	9"	2'- 9"	5'- 7"	8'- 0"	5	12"	9'- 8"	4	12"	9'- 8"
8	10	12½"	12½"	8"	8"	33	33'- 0"	33	33'- 0"	8	8'- 0"	5	9"	33'- 8"	5	9"	35'- 0"	3	9"	3'- 11"	7'- 7"	5	9"	2'- 11"	6'- 9"	9'- 3"	5	7"	11'- 9"	4	12"	11'- 9"
9	4	13"	13"	8"	8"	37	37'- 0"	37	37'- 0"	2	2'- 0"	5	8"	37'- 11"	5	8"	39'- 0"	3	8"	3'- 4"	6'- 5"	4	8"	2'- 9"	3'- 7"	6'- 1"	4	10½"	5'- 10"	4	12"	5'- 10"
9	6	13¼"	13¼"	8"	8"	37	37'- 0"	37	37'- 0"	4	4'- 0"	5	8"	37'- 11"	5	8"	39'- 0"	--	---	-----	-----	4	8"	2'- 9"	4'- 8"	7'- 1"	4	12"	7'- 10"	4	12"	7'- 10"
9	8	13¼"	13¼"	8"	8"	37	37'- 0"	37	37'- 0"	6	6'- 0"	5	8"	37'- 11"	5	8"	39'- 0"	3	8"	3'- 7"	6'- 11"	4	8"	2'- 9"	5'- 8"	8'- 1"	5	12"	9'- 10"	4	12"	9'- 10"
9	10	13½"	13½"	8"	8"	37	37'- 0"	37	37'- 0"	8	8'- 0"	5	8"	37'- 11"	5	8"	39'- 0"	4	8"	4'- 0"	7'- 8"	4	8"	2'- 9"	6'- 8"	9'- 1"	5	8"	11'- 11"	4	12"	11'- 11"
9	12	13½"	13½"	9.5"	8"	37	37'- 0"	37	37'- 0"	10	10'- 0"	5	9"	37'- 5"	5	9"	39'- 3"	--	---	-----	-----	7	9"	3'- 2"	8'- 3"	10'- 11"	6	7½"	13'- 11"	4	12"	13'- 11"
10	4	14¼"	14¼"	8"	8"	41	41'- 0"	41	41'- 0"	2	2'- 0"	5	9"	41'- 8"	5	9"	43'- 0"	--	---	-----	-----	5	9"	2'- 11"	3'- 11"	6'- 5"	4	10"	6'- 0"	4	12"	6'- 0"
10	6	14½"	14½"	8"	8"	41	41'- 0"	41	41'- 0"	4	4'- 0"	5	9"	41'- 8"	5	9"	43'- 0"	--	---	-----	-----	5	9"	2'- 11"	4'- 11"	7'- 5"	4	12"	8'- 0"	4	12"	8'- 0"
10	8	14½"	14½"	8"	8"	41	41'- 0"	41	41'- 0"	6	6'- 0"	5	9"	41'- 8"	5	9"	43'- 0"	--	---	-----	-----	5	9"	2'- 11"	5'- 11"	8'- 5"	5	12"	10'- 0"	4	12"	10'- 0"
10	10	14¾"	14¾"	8"	8"	41	41'- 0"	41	41'- 0"	8	8'- 0"	5	9"	41'- 8"	5	9"	43'- 0"	3	9"	4'- 1"	8'- 0"	5	9"	2'- 11"	6'- 11"	9'- 5"	5	8"	12'- 1"	4	12"	12'- 1"
10	12	14¾"	14¾"	9.5"	8"	41	41'- 0"	41	41'- 0"	10	10'- 0"	6	9"	41'- 8"	5	9"	43'- 3"	3	9"	4'- 6"	8'- 9"	6	9"	3'- 5"	8'- 1"	11'- 1"	6	7½"	14'- 1"	4	12"	14'- 1"
12	6	17"	17"	8"	8"	49	49'- 0"	49	49'- 0"	4	4'- 0"	6	8"	49'- 11"	5	8"	51'- 0"	--	---	-----	-----	4	8"	3'- 2"	4'- 11"	7'- 10"	4	12"	8'- 6"	4	12"	8'- 6"
12	8	17¼"	17¼"	8"	8"	49	49'- 0"	49	49'- 0"	6	6'- 0"	6	8"	49'- 11"	5	8"	51'- 0"	3	8"	3'- 11"	7'- 8"	4	8"	3'- 2"	6'- 0"	8'- 10"	5	12"	10'- 6"	4	12"	10'- 6"
12	10	17½"	17½"	8"	8"	49	49'- 0"	49	49'- 0"	8	8'- 0"	6	8"	49'- 8"	5	8"	51'- 0"	--	---	-----	-----	5	8"	3'- 4"	7'- 2"	10'- 1"	5	7½"	12'- 6"	4	12"	12'- 6"
12	12	17½"	17½"	9.5"	8"	49	49'- 0"	49	49'- 0"	10	10'- 0"	6	8"	49'- 11"	5	8"	51'- 3"	4	8"	4'- 9"	9'- 2"	5	8"	3'- 4"	8'- 2"	11'- 1"	6	7½"	14'- 6"	4	12"	14'- 6"

A COPY OF THE ORIGINAL SEALED AND SIGNED DRAWING IS ON FILE IN THE CENTRAL OFFICE

VDOT
ROAD AND BRIDGE STANDARDS

SHEET 1 OF 2 | REVISION DATE
1005.11 | 07/11

QUADRUPLE BOX CULVERTS

10 TO 20 FT. FILLS

VIRGINIA DEPARTMENT OF TRANSPORTATION

SPECIFICATION REFERENCE

BCQ-20

FOR TYPICAL SECTION, NOTES AND OTHER DETAILS, REFER TO STANDARD BCQ-DT.

		REINFORCING STEEL													QUAN./LF		HEADWALLS									
SPAN	HGHT	BT1															G	HW1								
(FT.)	(FT.)	SIZE	SPACING c-c	a	b	c	d	e	f	g	LENGTH	NO. BL1 #4 BARS	NO. BL2 #3 BARS	REINFORCING STEEL (LBS/LONG. JT)	CONCRETE CLASS A4 (CY/LF)	REINFORCING STEEL (LBS/LF)	HEADWALL LENGTH	SIZE	LENGTH	NO. HW2 BARS	NO. HW3 BARS	INLET CONCRETE CL. A4 (CY)	INLET REINFORCING STEEL (LBS)	OUTLET CONCRETE CL. A4 (CY)	OUTLET REINFORCING STEEL (LBS)	WINGWALL
3	3	4	12"	2'- 7"	0'- 4"	1'- 10"	0'- 5 1/8"	0'- 3 1/4"	15'- 0"	1'- 3"	15'- 7"	60	20	57.160	1.283	141.073	16'-10"	6	16'- 6"	3	12	2.222	137.876	2.191	99.132	A
3	4	4	12"	2'- 7"	0'- 4"	1'- 10"	0'- 5 1/8"	0'- 3 1/4"	15'- 0"	1'- 3"	15'- 7"	60	30	60.690	1.406	151.513	16'-10"	6	16'- 6"	3	15	2.333	148.230	2.284	99.132	C
4	3	4	12"	3'- 5"	0'- 4"	2'- 3"	0'- 5 1/8"	0'- 3 1/4"	19'- 0"	1'- 10"	19'- 7"	76	20	70.520	1.479	167.793	20'-10"	6	20'- 6"	3	12	2.626	161.908	2.609	123.164	A
4	4	4	12"	3'- 5"	0'- 4"	2'- 3"	0'- 5 1/8"	0'- 3 1/4"	19'- 0"	1'- 10"	19'- 7"	76	30	74.050	1.602	178.233	20'-10"	6	20'- 6"	3	15	2.738	172.262	2.702	123.164	C
4	5	4	12"	3'- 5"	0'- 4"	2'- 3"	0'- 5 1/8"	0'- 3 1/4"	19'- 0"	1'- 10"	19'- 7"	76	40	77.580	1.724	188.673	20'-10"	6	20'- 6"	3	18	2.849	182.616	2.794	123.164	E
4	6	4	12"	3'- 5"	0'- 4"	2'- 3"	0'- 5 1/8"	0'- 3 1/4"	19'- 0"	1'- 10"	19'- 7"	76	50	81.110	1.847	199.113	20'-10"	6	20'- 6"	3	21	2.960	192.970	2.887	123.164	G
5	3	4	12"	4'- 2"	0'- 4"	2'- 8"	0'- 5 1/8"	0'- 3 1/4"	23'- 0"	2'- 5"	23'- 7"	92	20	83.880	1.673	207.164	24'-10"	6	24'- 6"	3	12	3.031	185.940	3.027	147.196	A
5	4	4	12"	4'- 2"	0'- 4"	2'- 8"	0'- 5 1/8"	0'- 3 1/4"	23'- 0"	2'- 5"	23'- 7"	92	30	87.410	1.796	217.604	24'-10"	6	24'- 6"	3	15	3.142	196.294	3.120	147.196	C
5	5	4	12"	4'- 2"	0'- 4"	2'- 8"	0'- 5 1/8"	0'- 3 1/4"	23'- 0"	2'- 5"	23'- 7"	92	40	90.940	1.919	222.614	24'-10"	6	24'- 6"	3	18	3.254	206.648	3.212	147.196	E
5	6	4	12"	4'- 2"	0'- 4"	2'- 8"	0'- 5 1/8"	0'- 3 1/4"	23'- 0"	2'- 5"	23'- 7"	92	50	94.470	2.042	233.655	24'-10"	6	24'- 6"	3	21	3.365	217.002	3.305	147.196	G
5	7	4	12"	4'- 2"	0'- 4"	2'- 8"	0'- 5 1/8"	0'- 3 1/4"	23'- 0"	2'- 5"	23'- 7"	92	60	98.000	2.163	257.062	24'-10"	6	24'- 6"	3	24	3.476	227.356	3.398	147.196	I
6	4	4	12"	4'- 11"	0'- 5 1/4"	3'- 0"	0'- 7"	0'- 4 1/2"	27'- 0"	2'- 10"	27'- 11"	108	30	100.770	2.202	247.126	28'-10"	6	28'- 6"	3	15	3.485	220.326	3.475	171.228	D
6	5	4	11"	4'- 11"	0'- 5 1/4"	3'- 0"	0'- 7"	0'- 4 1/2"	27'- 0"	2'- 10"	27'- 11"	108	40	104.300	2.324	270.040	28'-10"	6	28'- 6"	3	18	3.596	230.680	3.568	171.228	F
6	6	4	12"	4'- 11"	0'- 5 1/2"	3'- 0"	0'- 7 1/4"	0'- 4 3/4"	27'- 0"	2'- 10"	27'- 11"	108	50	107.830	2.490	269.021	28'-10"	6	28'- 6"	3	21	3.691	241.034	3.644	171.228	H
6	7	4	11"	4'- 11"	0'- 5 1/2"	3'- 0"	0'- 7 1/4"	0'- 4 3/4"	27'- 0"	2'- 10"	27'- 11"	108	60	111.360	2.611	293.415	28'-10"	6	28'- 6"	3	24	3.803	251.388	3.737	171.228	J
6	8	4	11"	4'- 11"	0'- 5 1/2"	3'- 0"	0'- 7 1/4"	0'- 4 3/4"	27'- 0"	2'- 10"	27'- 11"	108	70	114.890	2.734	306.706	28'-10"	6	28'- 6"	3	27	3.914	261.742	3.830	171.228	L
7	4	4	10"	5'- 7"	0'- 6 1/2"	3'- 5"	0'- 8 3/4"	0'- 5 3/4"	31'- 0"	3'- 3"	32'- 2"	124	30	114.130	2.668	299.731	32'-10"	6	32'- 6"	3	15	3.778	244.358	3.781	195.260	D
7	6	4	10"	5'- 7"	0'- 6 3/4"	3'- 5"	0'- 9"	0'- 6"	31'- 0"	3'- 2"	32'- 2"	124	50	121.190	2.962	321.622	32'-10"	6	32'- 6"	3	21	3.981	265.066	3.947	195.260	H
7	8	4	10"	5'- 7"	0'- 7"	3'- 5"	0'- 9 3/8"	0'- 6 1/4"	31'- 0"	3'- 2"	32'- 3"	124	70	128.250	3.255	352.053	32'-10"	6	32'- 6"	3	27	4.184	285.774	4.113	195.260	L
7	10	4	10"	5'- 6"	0'- 7 1/4"	3'- 5"	0'- 9 3/4"	0'- 6 1/2"	31'- 0"	3'- 1"	32'- 3"	124	90	135.310	3.546	408.419	32'-10"	6	32'- 6"	3	33	4.388	306.482	4.280	195.260	P
8	4	4	9"	6'- 3"	0'- 8"	3'- 10"	0'- 10 7/8"	0'- 7 1/4"	35'- 0"	3'- 7"	36'- 5"	140	30	127.490	3.251	354.559	36'-10"	6	36'- 6"	3	15	4.017	268.390	4.034	219.292	D
8	6	4	9"	6'- 3"	0'- 8 1/4"	3'- 10"	0'- 11 1/8"	0'- 7 1/2"	35'- 0"	3'- 6"	36'- 6"	140	50	134.550	3.551	364.684	36'-10"	6	36'- 6"	3	21	4.217	289.098	4.197	219.292	H
8	8	5	9"	6'- 3"	0'- 8 1/4"	3'- 10"	0'- 11"	0'- 7 3/8"	35'- 0"	3'- 7"	36'- 5"	140	70	141.610	3.787	514.012	36'-10"	6	36'- 6"	3	27	4.440	309.806	4.382	219.292	L
8	10	5	9"	6'- 3"	0'- 8 1/2"	3'- 10"	0'- 11 3/8"	0'- 7 5/8"	35'- 0"	3'- 6"	36'- 6"	140	90	148.670	4.083	575.477	36'-10"	6	36'- 6"	3	33	4.640	330.514	4.546	219.292	P
9	4	5	8"	7'- 0"	0'- 9"	4'- 3"	1'- 1/8"	0'- 8 1/8"	39'- 0"	4'- 0"	40'- 7"	156	30	140.850	3.774	554.231	40'-10"	6	40'- 6"	3	15	4.270	292.422	4.301	243.324	D
9	6	5	8"	7'- 0"	0'- 9 1/4"	4'- 3"	1'- 1/2"	0'- 8 3/8"	39'- 0"	4'- 0"	40'- 8"	156	50	147.910	4.081	561.360	40'-10"	6	40'- 6"	3	21	4.468	313.130	4.461	243.324	H
9	8	5	8"	7'- 0"	0'- 9 1/4"	4'- 3"	1'- 1/2"	0'- 8 3/8"	39'- 0"	4'- 0"	40'- 8"	156	70	154.970	4.325	606.495	40'-10"	6	40'- 6"	3	27	4.690	333.838	4.646	243.324	L
9	10	5	8"	6'- 11"	0'- 9 1/2"	4'- 3"	1'- 7/8"	0'- 8 5/8"	39'- 0"	3'- 11"	40'- 9"	156	90	162.030	4.628	658.293	40'-10"	6	40'- 6"	3	33	4.888	354.546	4.806	243.324	P
9	12	5	9"	7'- 1"	0'- 9 1/2"	4'- 3"	1'- 7/8"	0'- 8 5/8"	39'- 3"	3'- 11"	41'- 0"	156	110	169.090	5.003	713.711	40'-10"	6	40'- 6"	3	39	5.110	375.254	4.992	243.324	T
10	4	5	9"	7'- 8"	0'- 10 1/4"	4'- 8"	1'- 1 7/8"	0'- 9 3/8"	43'- 0"	4'- 5"	44'- 10"	172	30	154.210	4.429	555.819	44'-10"	6	44'- 6"	3	15	4.471	316.454	4.514	267.356	D
10	6	5	9"	7'- 8"	0'- 10 1/2"	4'- 8"	1'- 2 1/4"	0'- 9 5/8"	43'- 0"	4'- 4"	44'- 11"	172	50	161.270	4.742	578.457	44'-10"	6	44'- 6"	3	21	4.665	337.162	4.671	267.356	H
10	8	5	9"	7'- 8"	0'- 10 1/2"	4'- 8"	1'- 2 1/4"	0'- 9 5/8"	43'- 0"	4'- 4"	44'- 11"	172	70	168.330	4.986	609.791	44'-10"	6	44'- 6"	3	27	4.887	357.870	4.856	267.356	L
10	10	5	9"	7'- 8"	0'- 10 3/4"	4'- 8"	1'- 2 5/8"	0'- 9 7/8"	43'- 0"	4'- 4"	45'- 0"	172	90	175.390	5.296	664.116	44'-10"	6	44'- 6"	3	33	5.082	378.578	5.013	267.356	P
10	12	6	9"	7'- 9"	0'- 10 3/4"	4'- 8"	1'- 2 1/2"	0'- 9 3/4"	43'- 3"	4'- 4"	45'- 2"	172	110	182.450	5.662	854.988	44'-10"	6	44'- 6"	3	39	5.304	399.286	5.199	267.356	T
12	6	6	8"	9'- 1"	1'- 1"	5'- 5"	1'- 5 5/8"	1'- 0"	51'- 0"	5'- 3"	53'- 5"	204	50	187.990	6.228	856.933	52'-10"	6	52'- 6"	3	21	4.985	385.226	5.018	315.420	I
12	8	6	8"	9'- 1"	1'- 1 1/4"	5'- 5"	1'- 6"	1'- 1/4"	51'- 0"	5'- 2"	53'- 5"	204	70	195.050	6.551	904.742	52'-10"	6	52'- 6"	3	27	5.173	405.934	5.169	315.420	M
12	10	6	8"	9'- 1"	1'- 1 1/2"	5'- 5"	1'- 6 3/8"	1'- 1/2"	51'- 0"	5'- 2"	53'- 6"	204	90	202.110	6.873	949.975	52'-10"	6	52'- 6"	3	33	5.361	426.642	5.319	315.420	Q
12	12	6	8"	9'- 2"	1'- 1 1/2"	5'- 5"	1'- 6 3/8"	1'- 1/2"	51'- 3"	5'- 2"	53'- 9"	204	110	209.170	7.252	1039.445	52'-10"	6	52'- 6"	3	39	5.584	447.350	5.505	315.420	U

A COPY OF THE ORIGINAL SEALED AND SIGNED DRAWING IS ON FILE IN THE CENTRAL OFFICE.

SPECIFICATION REFERENCE

QUADRUPLE BOX CULVERTS

10 TO 20 FT. FILLS

VIRGINIA DEPARTMENT OF TRANSPORTATION

VDOT

ROAD AND BRIDGE STANDARDS

REVISION DATE 07/11

SHEET 2 OF 2

1005.12

BCQ-30

FOR TYPICAL SECTION, NOTES AND OTHER DETAILS, REFER TO STANDARD BCQ-DT.

DIMENSIONS						REINFORCING STEEL																										
SPAN	HGHT	T1	T2	T3	T4							BH1			BH2			BH3				BH4					BV1			BV2		
(FT.)	(FT.)	TOP SLAB	BOTTOM SLAB	EXTERIOR WALL (IN.)	INTERIOR WALL (IN.)	A	B	C	D	E	F	SIZE	SPACING c-c	LENGTH	SIZE	SPACING c-c	LENGTH	SIZE	SPACING c-c	a	LENGTH	SIZE	SPACING c-c	a	b	LENGTH	SIZE	SPACING c-c	LENGTH	SIZE	SPACING c-c	LENGTH
3	3	8"	8"	8"	8"	13	13'- 0"	13	13'- 0"	1	1'- 0"	4	12"	13'- 11"	4	12"	15'- 0"	--	---	-----	-----	4	12"	2'- 4"	2'- 8"	4'- 9"	4	12"	4'- 0"	4	12"	4'- 0"
3	4	8"	8"	8"	8"	13	13'- 0"	13	13'- 0"	2	2'- 0"	4	12"	13'- 11"	4	12"	15'- 0"	--	---	-----	-----	4	12"	2'- 4"	3'- 2"	5'- 3"	4	12"	5'- 0"	4	12"	5'- 0"
4	3	8½"	8½"	8"	8"	17	17'- 0"	17	17'- 0"	1	1'- 0"	4	12"	17'- 11"	4	12"	19'- 0"	--	---	-----	-----	4	12"	2'- 4"	2'- 9"	4'- 9"	4	12"	4'- 1"	4	12"	4'- 1"
4	4	8½"	8½"	8"	8"	17	17'- 0"	17	17'- 0"	2	2'- 0"	4	12"	17'- 11"	4	12"	19'- 0"	--	---	-----	-----	4	12"	2'- 4"	3'- 3"	5'- 3"	4	12"	5'- 1"	4	12"	5'- 1"
4	5	8½"	8½"	8"	8"	17	17'- 0"	17	17'- 0"	3	3'- 0"	4	12"	17'- 11"	4	12"	19'- 0"	--	---	-----	-----	4	12"	2'- 4"	3'- 9"	5'- 9"	4	12"	6'- 1"	4	12"	6'- 1"
4	6	8½"	8½"	8"	8"	17	17'- 0"	17	17'- 0"	4	4'- 0"	4	12"	17'- 11"	4	12"	19'- 0"	--	---	-----	-----	4	12"	2'- 4"	4'- 3"	6'- 3"	5	12"	7'- 1"	4	12"	7'- 1"
5	3	10¼"	10¼"	8"	8"	21	21'- 0"	21	21'- 0"	1	1'- 0"	4	12"	21'- 11"	4	12"	23'- 0"	3	12"	2'- 6"	4'- 10"	4	12"	2'- 4"	2'- 11"	4'- 11"	4	12"	4'- 4"	4	12"	4'- 4"
5	4	10"	10"	8"	8"	21	21'- 0"	21	21'- 0"	2	2'- 0"	4	12"	21'- 11"	4	12"	23'- 0"	3	12"	2'- 6"	4'- 10"	4	12"	2'- 4"	3'- 4"	5'- 5"	4	12"	5'- 4"	4	12"	5'- 4"
5	5	10¼"	10¼"	8"	8"	21	21'- 0"	21	21'- 0"	3	3'- 0"	4	12"	21'- 11"	4	12"	23'- 0"	3	12"	2'- 9"	5'- 3"	4	12"	2'- 4"	3'- 11"	5'- 11"	4	12"	6'- 4"	4	12"	6'- 4"
5	6	10"	10"	8"	8"	21	21'- 0"	21	21'- 0"	4	4'- 0"	4	12"	21'- 11"	4	12"	23'- 0"	4	12"	2'- 11"	5'- 6"	4	12"	2'- 4"	4'- 4"	6'- 5"	5	12"	7'- 4"	4	12"	7'- 4"
5	7	10"	10"	8"	8"	21	21'- 0"	21	21'- 0"	5	5'- 0"	4	12"	21'- 11"	4	12"	23'- 0"	4	12"	3'- 1"	5'- 11"	4	12"	2'- 4"	4'- 10"	6'- 11"	5	12"	8'- 3"	4	12"	8'- 3"
6	4	12"	12"	8"	8"	25	25'- 0"	25	25'- 0"	2	2'- 0"	4	10"	25'- 11"	4	10"	27'- 0"	--	---	-----	-----	4	10"	2'- 4"	3'- 6"	5'- 7"	4	12"	5'- 8"	4	12"	5'- 8"
6	5	12¼"	12¼"	8"	8"	25	25'- 0"	25	25'- 0"	3	3'- 0"	4	10"	25'- 11"	4	10"	27'- 0"	--	---	-----	-----	4	10"	2'- 4"	4'- 1"	6'- 1"	4	12"	6'- 8"	4	12"	6'- 8"
6	6	11½"	11½"	8"	8"	25	25'- 0"	25	25'- 0"	4	4'- 0"	4	10"	25'- 11"	4	10"	27'- 0"	--	---	-----	-----	4	10"	2'- 4"	4'- 6"	6'- 6"	4	12"	7'- 7"	4	12"	7'- 7"
6	7	11½"	11½"	8"	8"	25	25'- 0"	25	25'- 0"	5	5'- 0"	4	10"	25'- 11"	4	10"	27'- 0"	3	10"	3'- 3"	6'- 3"	4	10"	2'- 4"	5'- 0"	7'- 0"	5	12"	8'- 6"	4	12"	8'- 6"
6	8	11¾"	11¾"	8"	8"	25	25'- 0"	25	25'- 0"	6	6'- 0"	4	10"	25'- 8"	4	10"	27'- 0"	--	---	-----	-----	5	10"	2'- 6"	5'- 8"	7'- 9"	5	8½"	9'- 7"	4	12"	9'- 7"
7	4	13½"	13½"	8"	8"	29	29'- 0"	29	29'- 0"	2	2'- 0"	4	9"	29'- 11"	4	9"	31'- 0"	--	---	-----	-----	4	9"	2'- 4"	3'- 8"	5'- 8"	4	12"	5'- 11"	4	12"	5'- 11"
7	6	13½"	13½"	8"	8"	29	29'- 0"	29	29'- 0"	4	4'- 0"	4	9"	29'- 11"	5	9"	31'- 0"	--	---	-----	-----	4	9"	2'- 4"	4'- 8"	6'- 8"	4	12"	7'- 11"	4	12"	7'- 11"
7	8	13¼"	13¼"	8"	8"	29	29'- 0"	29	29'- 0"	6	6'- 0"	4	9"	29'- 11"	5	9"	31'- 0"	3	9"	3'- 7"	6'- 11"	4	9"	2'- 4"	5'- 8"	7'- 8"	5	9"	9'- 10"	4	12"	9'- 10"
7	10	13¼"	13¼"	9½"	8"	29	29'- 0"	29	29'- 0"	8	8'- 0"	4	9"	29'- 11"	5	9"	31'- 3"	3	9"	4'- 0"	7'- 9"	5	9"	2'- 6"	6'- 10"	8'- 11"	6	8"	11'- 10"	4	12"	11'- 10"
8	4	15½"	15½"	8"	8"	33	33'- 0"	33	33'- 0"	2	2'- 0"	5	9"	33'- 11"	5	9"	35'- 0"	--	---	-----	-----	4	9"	2'- 9"	3'- 10"	6'- 3"	4	12"	6'- 3"	4	12"	6'- 3"
8	6	15½"	15½"	8"	8"	33	33'- 0"	33	33'- 0"	4	4'- 0"	5	9"	33'- 11"	5	9"	35'- 0"	--	---	-----	-----	4	9"	2'- 9"	4'- 10"	7'- 3"	4	12"	8'- 3"	4	12"	8'- 3"
8	8	15¼"	15¼"	8"	8"	33	33'- 0"	33	33'- 0"	6	6'- 0"	5	9"	33'- 11"	5	9"	35'- 0"	3	9"	3'- 9"	7'- 3"	4	9"	2'- 9"	5'- 10"	8'- 3"	5	9"	10'- 2"	4	12"	10'- 2"
8	10	15"	15"	9½"	8"	33	33'- 0"	33	33'- 0"	8	8'- 0"	5	9"	33'- 11"	5	9"	35'- 3"	3	9"	4'- 1"	8'- 0"	5	9"	2'- 11"	6'- 11"	9'- 6"	7	11½"	12'- 1"	4	12"	12'- 1"
9	4	17"	17"	8"	8"	37	37'- 0"	37	37'- 0"	2	2'- 0"	6	9"	37'- 11"	5	9"	39'- 0"	--	---	-----	-----	4	9"	3'- 2"	3'- 11"	6'- 10"	4	12"	6'- 6"	4	12"	6'- 6"
9	6	17"	17"	8"	8"	37	37'- 0"	37	37'- 0"	4	4'- 0"	6	9"	37'- 11"	5	9"	39'- 0"	--	---	-----	-----	4	9"	3'- 2"	4'- 11"	7'- 10"	4	12"	8'- 6"	4	12"	8'- 6"
9	8	17"	17"	8"	8"	37	37'- 0"	37	37'- 0"	6	6'- 0"	6	9"	37'- 8"	5	9"	39'- 0"	--	---	-----	-----	5	9"	3'- 4"	6'- 2"	9'- 1"	5	9"	10'- 6"	4	12"	10'- 6"
9	10	17"	17"	9"	8"	37	37'- 0"	37	37'- 0"	8	8'- 0"	5	9"	37'- 7"	5	9"	39'- 1"	--	---	-----	-----	6	9"	3'- 0"	7'- 3"	9'- 10"	6	8"	12'- 6"	4	12"	12'- 6"
9	12	17"	17"	11"	8"	37	37'- 0"	37	37'- 0"	10	10'- 0"	5	9"	37'- 8"	5	9"	39'- 6"	--	---	-----	-----	7	9"	3'- 2"	8'- 6"	11'- 2"	5	5½"	14'- 6"	4	12"	14'- 6"
10	4	18½"	18½"	8"	8"	41	41'- 0"	41	41'- 0"	2	2'- 0"	6	9"	41'- 11"	6	9"	43'- 0"	--	---	-----	-----	4	9"	3'- 2"	4'- 1"	6'- 11"	4	12"	6'- 9"	4	10½"	6'- 9"
10	6	18½"	18½"	8"	8"	41	41'- 0"	41	41'- 0"	4	4'- 0"	6	9"	41'- 11"	6	9"	43'- 0"	--	---	-----	-----	4	9"	3'- 2"	5'- 1"	7'- 11"	4	12"	8'- 9"	4	10½"	8'- 9"
10	8	18¾"	18¾"	8"	8"	41	41'- 0"	41	41'- 0"	6	6'- 0"	6	9"	41'- 11"	6	9"	43'- 0"	3	9"	4'- 0"	7'- 10"	4	9"	3'- 2"	6'- 1"	9'- 0"	5	9"	10'- 9"	4	11"	10'- 9"
10	10	18¾"	18¾"	9"	8"	41	41'- 0"	41	41'- 0"	8	8'- 0"	6	9"	41'- 10"	6	9"	43'- 1"	3	9"	4'- 5"	8'- 8"	5	9"	3'- 4"	7'- 3"	10'- 2"	5	5"	12'- 9"	4	11"	12'- 9"
10	12	18¾"	18¾"	11"	8"	41	41'- 0"	41	41'- 0"	10	10'- 0"	6	9"	41'- 11"	6	9"	43'- 6"	4	9"	4'- 10"	9'- 4"	6	9"	3'- 5"	8'- 5"	11'- 5"	5	5½"	14'- 9"	4	11"	14'- 9"
12	6	21¾"	21¾"	8"	8"	49	49'- 0"	49	49'- 0"	4	4'- 0"	6	8"	49'- 11"	6	8"	51'- 0"	--	---	-----	-----	4	8"	3'- 2"	5'- 4"	8'- 3"	4	12"	9'- 3"	4	10"	9'- 3"
12	8	21¾"	21¾"	8"	8"	49	49'- 0"	49	49'- 0"	6	6'- 0"	6	8"	49'- 11"	6	8"	51'- 0"	3	8"	4'- 3"	8'- 4"	4	8"	3'- 2"	6'- 4"	9'- 3"	5	8½"	11'- 3"	4	10"	11'- 3"
12	10	21¾"	21¾"	8½"	8"	49	49'- 0"	49	49'- 0"	8	8'- 0"	6	8"	49'- 9"	6	8"	51'- 0"	3	8"	4'- 8"	9'- 2"	5	8"	3'- 4"	7'- 6"	10'- 5"	5	5"	13'- 3"	4	10"	13'- 3"
12	12	21¾"	21¾"	11"	8"	49	49'- 0"	49	49'- 0"	10	10'- 0"	6	8"	50'- 2"	6	8"	51'- 6"	4	8"	5'- 1"	9'- 10"	5	8"	3'- 4"	8'- 6"	11'- 5"	5	5½"	15'- 3"	4	10"	15'- 3"

A COPY OF THE ORIGINAL SEALED AND SIGNED DRAWING IS ON FILE IN THE CENTRAL OFFICE

VDOT
ROAD AND BRIDGE STANDARDS

SHEET 1 OF 2

1005.13

REVISION DATE
07/11

QUADRUPLE BOX CULVERTS

20 TO 30 FT. FILLS

VIRGINIA DEPARTMENT OF TRANSPORTATION

SPECIFICATION REFERENCE

BCQ-30

FOR TYPICAL SECTION, NOTES AND OTHER DETAILS, REFER TO STANDARD BCQ-DT.

SPAN	HGHT	REINFORCING STEEL												REINFORCING STEEL (LBS/LONG. JT)	QUAN./LF		HEADWALLS									WINGWALL
		BT1															G	HW1								
(FT.)	(FT.)	SIZE	SPACING c-c	a	b	c	d	e	f	g	LENGTH	NO. BL1 #4 BARS	NO. BL2 #3 BARS		CONCRETE CLASS A4 (CY/LF)	REINFORCING STEEL (LBS/LF)	HEADWALL LENGTH	SIZE	LENGTH	NO. HW2 BARS	NO. HW3 BARS	INLET CONCRETE CL. A4 (CY)	INLET REINFORCING STEEL (LBS)	OUTLET CONCRETE CL. A4 (CY)	OUTLET REINFORCING STEEL (LBS)	
3	3	4	12"	2'- 7"	0'- 4"	1'- 10"	0'- 5 1/8"	0'- 3 1/4"	15'- 0"	1'- 3"	15'- 7"	60	20	57.160	1.283	141.073	16'-10"	6	16'- 6"	3	12	2.222	137.876	2.191	99.132	A
3	4	4	12"	2'- 7"	0'- 4"	1'- 10"	0'- 5 1/8"	0'- 3 1/4"	15'- 0"	1'- 3"	15'- 7"	60	30	60.690	1.406	151.513	16'-10"	6	16'- 6"	3	15	2.333	148.230	2.284	99.132	C
4	3	4	12"	3'- 4"	0'- 4 1/2"	2'- 3"	0'- 5 7/8"	0'- 3 3/4"	19'- 0"	1'- 9"	19'- 9"	76	20	70.520	1.538	168.486	20'-10"	6	20'- 6"	3	12	2.606	161.908	2.589	123.164	A
4	4	4	12"	3'- 4"	0'- 4 1/2"	2'- 3"	0'- 5 7/8"	0'- 3 3/4"	19'- 0"	1'- 9"	19'- 9"	76	30	74.050	1.661	178.926	20'-10"	6	20'- 6"	3	15	2.718	172.262	2.682	123.164	C
4	5	4	12"	3'- 4"	0'- 4 1/2"	2'- 3"	0'- 5 7/8"	0'- 3 3/4"	19'- 0"	1'- 9"	19'- 9"	76	40	77.580	1.784	189.366	20'-10"	6	20'- 6"	3	18	2.829	182.616	2.774	123.164	E
4	6	4	12"	3'- 4"	0'- 4 1/2"	2'- 3"	0'- 5 7/8"	0'- 3 3/4"	19'- 0"	1'- 9"	19'- 9"	76	50	81.110	1.906	205.118	20'-10"	6	20'- 6"	3	21	2.940	192.970	2.867	123.164	G
5	3	4	12"	4'- 0"	0'- 6 1/4"	2'- 8"	0'- 8 3/8"	0'- 5 1/2"	23'- 0"	2'- 0"	24'- 1"	92	20	83.880	1.998	204.855	24'-10"	6	24'- 6"	3	12	2.932	185.940	2.927	147.196	B
5	4	4	12"	4'- 0"	0'- 6"	2'- 8"	0'- 8"	0'- 5 1/4"	23'- 0"	2'- 1"	24'- 0"	92	30	87.410	2.084	214.948	24'-10"	6	24'- 6"	3	15	3.056	196.294	3.033	147.196	D
5	5	4	12"	4'- 0"	0'- 6 1/4"	2'- 8"	0'- 8 3/8"	0'- 5 1/2"	23'- 0"	2'- 0"	24'- 1"	92	40	90.940	2.243	226.299	24'-10"	6	24'- 6"	3	18	3.154	206.648	3.113	147.196	F
5	6	4	12"	4'- 0"	0'- 6"	2'- 8"	0'- 8"	0'- 5 1/4"	23'- 0"	2'- 1"	24'- 0"	92	50	94.470	2.329	248.718	24'-10"	6	24'- 6"	3	21	3.279	217.002	3.219	147.196	H
5	7	4	12"	4'- 0"	0'- 6"	2'- 8"	0'- 8"	0'- 5 1/4"	23'- 0"	2'- 1"	24'- 0"	92	60	98.000	2.451	260.977	24'-10"	6	24'- 6"	3	24	3.390	227.356	3.311	147.196	J
6	4	4	10"	4'- 8"	0'- 8"	3'- 0"	0'- 10 7/8"	0'- 7 1/4"	27'- 0"	2'- 5"	28'- 5"	108	30	100.770	2.665	261.928	28'-10"	6	28'- 6"	3	15	3.307	220.326	3.297	171.228	D
6	5	4	10"	4'- 8"	0'- 8 1/4"	3'- 0"	0'- 11 1/8"	0'- 7 1/2"	27'- 0"	2'- 4"	28'- 6"	108	40	104.300	2.830	273.007	28'-10"	6	28'- 6"	3	18	3.402	230.680	3.373	171.228	F
6	6	4	10"	4'- 9"	0'- 7 1/2"	3'- 0"	0'- 10 1/8"	0'- 6 3/4"	27'- 0"	2'- 6"	28'- 4"	108	50	107.830	2.826	282.598	28'-10"	6	28'- 6"	3	21	3.562	241.034	3.515	171.228	H
6	7	4	10"	4'- 9"	0'- 7 1/2"	3'- 0"	0'- 10 1/8"	0'- 6 3/4"	27'- 0"	2'- 6"	28'- 4"	108	60	111.360	2.947	310.904	28'-10"	6	28'- 6"	3	24	3.673	251.388	3.607	171.228	J
6	8	4	10"	4'- 8"	0'- 7 3/4"	3'- 0"	0'- 10 1/2"	0'- 7"	27'- 0"	2'- 5"	28'- 5"	108	70	114.890	3.111	334.127	28'-10"	6	28'- 6"	3	27	3.768	261.742	3.684	171.228	L
7	4	4	9"	5'- 4"	0'- 9 1/2"	3'- 5"	1'- 1"	0'- 8 3/4"	31'- 0"	2'- 9"	32'- 9"	124	30	114.130	3.248	312.794	32'-10"	6	32'- 6"	3	15	3.565	244.358	3.569	195.260	D
7	6	4	9"	5'- 4"	0'- 9 1/2"	3'- 5"	1'- 1"	0'- 8 3/4"	31'- 0"	2'- 9"	32'- 9"	124	50	121.190	3.490	365.565	32'-10"	6	32'- 6"	3	21	3.788	265.066	3.754	195.260	H
7	8	4	9"	5'- 4"	0'- 9 1/4"	3'- 5"	1'- 5/8"	0'- 8 1/2"	31'- 0"	2'- 9"	32'- 8"	124	70	128.250	3.685	415.008	32'-10"	6	32'- 6"	3	27	4.011	285.774	3.940	195.260	L
7	10	4	9"	5'- 6"	0'- 9 1/4"	3'- 5"	1'- 5/8"	0'- 8 1/2"	31'- 3"	2'- 9"	32'- 11"	124	90	135.310	4.040	481.430	32'-10"	6	32'- 6"	3	33	4.233	306.482	4.125	195.260	P
8	4	5	9"	6'- 0"	0'- 11 1/2"	3'- 10"	1'- 3 5/8"	0'- 10 5/8"	35'- 0"	3'- 0"	37'- 1"	140	30	127.490	4.006	455.459	36'-10"	6	36'- 6"	3	15	3.749	268.390	3.765	219.292	D
8	6	5	9"	6'- 0"	0'- 11 1/2"	3'- 10"	1'- 3 5/8"	0'- 10 5/8"	35'- 0"	3'- 0"	37'- 1"	140	50	134.550	4.251	477.230	36'-10"	6	36'- 6"	3	21	3.971	289.098	3.951	219.292	H
8	8	5	9"	6'- 0"	0'- 11 1/4"	3'- 10"	1'- 3 1/4"	0'- 10 3/8"	35'- 0"	3'- 1"	37'- 1"	140	70	141.610	4.440	527.772	36'-10"	6	36'- 6"	3	27	4.190	309.806	4.133	219.292	M
8	10	5	9"	6'- 2"	0'- 11"	3'- 10"	1'- 3"	0'- 10 1/8"	35'- 3"	3'- 1"	37'- 3"	140	90	148.670	4.743	592.544	36'-10"	6	36'- 6"	3	33	4.417	330.514	4.322	219.292	P
9	4	6	9"	6'- 8"	1'- 1"	4'- 3"	1'- 5 5/8"	1'- 0"	39'- 0"	3'- 5"	41'- 5"	156	30	140.850	4.742	600.657	40'-10"	6	40'- 6"	3	15	3.882	292.422	3.912	243.324	E
9	6	6	9"	6'- 8"	1'- 1"	4'- 3"	1'- 5 5/8"	1'- 0"	39'- 0"	3'- 5"	41'- 5"	156	50	147.910	4.987	622.427	40'-10"	6	40'- 6"	3	21	4.104	313.130	4.097	243.324	I
9	8	6	9"	6'- 8"	1'- 1"	4'- 3"	1'- 5 5/8"	1'- 0"	39'- 0"	3'- 5"	41'- 5"	156	70	154.970	5.230	677.154	40'-10"	6	40'- 6"	3	27	4.327	333.838	4.283	243.324	M
9	10	5	9"	6'- 9"	1'- 1"	4'- 3"	1'- 5 3/4"	1'- 1/8"	39'- 1"	3'- 4"	41'- 7"	156	90	162.030	5.558	652.398	40'-10"	6	40'- 6"	3	33	4.550	354.546	4.468	243.324	Q
9	12	5	9"	6'- 11"	1'- 1"	4'- 3"	1'- 5 3/4"	1'- 1/8"	39'- 6"	3'- 4"	41'- 11"	156	110	169.090	5.995	722.430	40'-10"	6	40'- 6"	3	39	4.727	375.254	4.608	243.324	U
10	4	6	9"	7'- 4"	1'- 2 1/2"	4'- 8"	1'- 7 3/4"	1'- 1 1/2"	43'- 0"	3'- 9"	45'- 8"	172	30	154.210	5.554	714.032	44'-10"	6	44'- 6"	3	15	4.004	316.454	4.047	267.356	E
10	6	6	9"	7'- 4"	1'- 2 1/2"	4'- 8"	1'- 7 3/4"	1'- 1 1/2"	43'- 0"	3'- 9"	45'- 8"	172	50	161.270	5.799	736.948	44'-10"	6	44'- 6"	3	21	4.227	337.162	4.233	267.356	I
10	8	6	9"	7'- 4"	1'- 2 3/4"	4'- 8"	1'- 8 1/8"	1'- 1 3/4"	43'- 0"	3'- 8"	45'- 9"	172	70	168.330	6.109	789.369	44'-10"	6	44'- 6"	3	27	4.421	357.870	4.390	267.356	M
10	10	6	9"	7'- 5"	1'- 2 3/4"	4'- 8"	1'- 8 1/8"	1'- 1 3/4"	43'- 1"	3'- 8"	45'- 11"	172	90	175.390	6.431	866.899	44'-10"	6	44'- 6"	3	33	4.643	378.578	4.575	267.356	Q
10	12	6	9"	7'- 7"	1'- 2 3/4"	4'- 8"	1'- 8 1/8"	1'- 1 3/4"	43'- 6"	3'- 8"	46'- 3"	172	110	182.450	6.871	940.128	44'-10"	6	44'- 6"	3	39	4.820	399.286	4.714	267.356	U
12	6	6	8"	8'- 8"	1'- 5 3/4"	5'- 5"	2'- 3/8"	1'- 4 3/4"	51'- 0"	4'- 5"	54'- 4"	204	50	187.990	7.727	944.848	52'-10"	6	52'- 6"	3	21	4.344	385.226	4.377	315.420	J
12	8	6	8"	8'- 8"	1'- 5 3/4"	5'- 5"	2'- 3/8"	1'- 4 3/4"	51'- 0"	4'- 5"	54'- 4"	204	70	195.050	7.969	1005.543	52'-10"	6	52'- 6"	3	27	4.567	405.934	4.562	315.420	N
12	10	6	8"	8'- 9"	1'- 5 3/4"	5'- 5"	2'- 3/8"	1'- 4 3/4"	51'- 0"	4'- 5"	54'- 5"	204	90	202.110	8.252	1086.055	52'-10"	6	52'- 6"	3	33	4.789	426.642	4.748	315.420	R
12	12	6	8"	8'- 11"	1'- 5 3/4"	5'- 5"	2'- 3/8"	1'- 4 3/4"	51'- 6"	4'- 5"	54'- 10"	204	110	209.170	8.742	1137.009	52'-10"	6	52'- 6"	3	39	4.964	447.350	4.885	315.420	V

A COPY OF THE ORIGINAL SEALED AND SIGNED DRAWING IS ON FILE IN THE CENTRAL OFFICE.

SPECIFICATION REFERENCE

QUADRUPLE BOX CULVERTS

20 TO 30 FT. FILLS

VIRGINIA DEPARTMENT OF TRANSPORTATION

VDOT

ROAD AND BRIDGE STANDARDS

REVISION DATE 07/11

SHEET 2 OF 2

1005.14

BCQ-40

FOR TYPICAL SECTION, NOTES AND OTHER DETAILS, REFER TO STANDARD BCQ-DT.

DIMENSIONS						REINFORCING STEEL																										
SPAN	HGHT	T1	T2	T3	T4							BH1			BH2			BH3				BH4					BV1			BV2		
(FT.)	(FT.)	TOP SLAB	BOTTOM SLAB	EXTERIOR WALL (IN.)	INTERIOR WALL (IN.)	A	B	C	D	E	F	SIZE	SPACING C-C	LENGTH	SIZE	SPACING C-C	LENGTH	SIZE	SPACING C-C	a	LENGTH	SIZE	SPACING C-C	a	b	LENGTH	SIZE	SPACING C-C	LENGTH	SIZE	SPACING C-C	LENGTH
3	3	8"	8"	8"	8"	13	13'- 0"	13	13'- 0"	1	1'- 0"	4	12"	13'-11"	4	12"	15'- 0"	4	12"	2'- 2"	4'- 0"	4	12"	2'- 4"	2'- 8"	4'- 9"	4	12"	4'- 0"	4	12"	4'- 0"
3	4	8"	8"	8"	8"	13	13'- 0"	13	13'- 0"	2	2'- 0"	4	12"	13'-11"	4	12"	15'- 0"	3	12"	2'- 4"	4'- 5"	4	12"	2'- 4"	3'- 2"	5'- 3"	4	12"	5'- 0"	4	12"	5'- 0"
4	3	10"	10"	8"	8"	17	17'- 0"	17	17'- 0"	1	1'- 0"	4	12"	17'-11"	4	12"	19'- 0"	--	---	-----	-----	4	12"	2'- 4"	2'- 10"	4'- 11"	4	12"	4'- 4"	4	12"	4'- 4"
4	4	9¾"	9¾"	8"	8"	17	17'- 0"	17	17'- 0"	2	2'- 0"	4	12"	17'-11"	4	12"	19'- 0"	--	---	-----	-----	4	12"	2'- 4"	3'- 4"	5'- 5"	4	12"	5'- 3"	4	12"	5'- 3"
4	5	9¾"	9¾"	8"	8"	17	17'- 0"	17	17'- 0"	3	3'- 0"	4	12"	17'-11"	4	12"	19'- 0"	--	---	-----	-----	4	12"	2'- 4"	3'- 10"	5'- 11"	4	12"	6'- 3"	4	12"	6'- 3"
4	6	9¾"	9¾"	8"	8"	17	17'- 0"	17	17'- 0"	4	4'- 0"	4	12"	17'-11"	4	12"	19'- 0"	4	12"	2'- 11"	5'- 6"	4	12"	2'- 4"	4'- 4"	6'- 5"	5	12"	7'- 3"	4	12"	7'- 3"
5	3	12"	12"	8"	8"	21	21'- 0"	21	21'- 0"	1	1'- 0"	4	11"	21'-11"	4	11"	23'- 0"	--	---	-----	-----	4	11"	2'- 4"	3'- 0"	5'- 1"	4	12"	4'- 8"	4	12"	4'- 8"
5	4	12"	12"	8"	8"	21	21'- 0"	21	21'- 0"	2	2'- 0"	4	11"	21'-11"	4	11"	23'- 0"	--	---	-----	-----	4	11"	2'- 4"	3'- 6"	5'- 7"	4	12"	5'- 8"	4	12"	5'- 8"
5	5	11¾"	11¾"	8"	8"	21	21'- 0"	21	21'- 0"	3	3'- 0"	4	11"	21'-11"	4	11"	23'- 0"	--	---	-----	-----	4	11"	2'- 4"	4'- 0"	6'- 1"	4	12"	6'- 7"	4	12"	6'- 7"
5	6	11¾"	11¾"	8"	8"	21	21'- 0"	21	21'- 0"	4	4'- 0"	4	11"	21'-11"	4	11"	23'- 0"	3	11"	3'- 1"	5'- 10"	4	11"	2'- 4"	4'- 6"	6'- 7"	5	12"	7'- 7"	4	12"	7'- 7"
5	7	11¾"	11¾"	8"	8"	21	21'- 0"	21	21'- 0"	5	5'- 0"	4	11"	21'-11"	4	11"	23'- 0"	4	11"	3'- 3"	6'- 2"	4	11"	2'- 4"	5'- 0"	7'- 1"	5	8½"	8'- 7"	4	12"	8'- 7"
6	4	14"	14"	8"	8"	25	25'- 0"	25	25'- 0"	2	2'- 0"	4	9"	25'-11"	4	9"	27'- 0"	--	---	-----	-----	4	9"	2'- 4"	3'- 8"	5'- 9"	4	12"	6'- 0"	4	12"	6'- 0"
6	5	14"	14"	8"	8"	25	25'- 0"	25	25'- 0"	3	3'- 0"	4	9"	25'-11"	4	9"	27'- 0"	--	---	-----	-----	4	9"	2'- 4"	4'- 2"	6'- 3"	4	12"	7'- 0"	4	12"	7'- 0"
6	6	14"	14"	8"	8"	25	25'- 0"	25	25'- 0"	4	4'- 0"	4	9"	25'-11"	4	9"	27'- 0"	--	---	-----	-----	4	9"	2'- 4"	4'- 8"	6'- 9"	5	12"	8'- 0"	4	12"	8'- 0"
6	7	14"	14"	8"	8"	25	25'- 0"	25	25'- 0"	5	5'- 0"	4	9"	25'-11"	4	9"	27'- 0"	3	9"	3'- 5"	6'- 8"	4	9"	2'- 4"	5'- 2"	7'- 3"	5	8½"	9'- 0"	4	12"	9'- 0"
6	8	14"	14"	8½"	8"	25	25'- 0"	25	25'- 0"	6	6'- 0"	4	9"	25'-9"	4	9"	27'- 1"	--	---	-----	-----	5	9"	2'- 6"	5'- 10"	8'- 0"	5	6"	10'- 0"	4	12"	10'- 0"
7	4	16½"	16½"	8"	8"	29	29'- 0"	29	29'- 0"	2	2'- 0"	5	9"	29'-11"	5	9"	31'- 0"	--	---	-----	-----	4	9"	2'- 9"	3'- 11"	6'- 4"	4	12"	6'- 5"	4	11½"	6'- 5"
7	6	16"	16"	8"	8"	29	29'- 0"	29	29'- 0"	4	4'- 0"	5	9"	29'-11"	5	9"	31'- 0"	--	---	-----	-----	4	9"	2'- 9"	4'- 10"	7'- 4"	5	12"	8'- 3"	4	11½"	8'- 3"
7	8	15¾"	15¾"	8"	8"	29	29'- 0"	29	29'- 0"	6	6'- 0"	5	9"	29'-11"	5	9"	31'- 0"	3	9"	3'- 9"	7'- 4"	4	9"	2'- 9"	5'- 10"	8'- 4"	5	6"	10'- 3"	4	11½"	10'- 3"
7	10	15¾"	15¾"	10½"	8"	29	29'- 0"	29	29'- 0"	8	8'- 0"	5	9"	30'-1"	5	9"	31'- 5"	3	9"	4'- 2"	8'- 2"	5	9"	2'- 11"	7'- 0"	9'- 6"	6	6½"	12'- 3"	4	12"	12'- 3"
8	4	18½"	18½"	8"	8"	33	33'- 0"	33	33'- 0"	2	2'- 0"	5	9"	33'-11"	5	9"	35'- 0"	--	---	-----	-----	4	9"	2'- 9"	4'- 1"	6'- 6"	4	12"	6'- 9"	4	10½"	6'- 9"
8	6	18"	18"	8"	8"	33	33'- 0"	33	33'- 0"	4	4'- 0"	5	8"	33'-11"	5	8"	35'- 0"	--	---	-----	-----	4	8"	2'- 9"	5'- 0"	7'- 6"	5	12"	8'- 7"	4	10½"	8'- 7"
8	8	17¾"	17¾"	8"	8"	33	33'- 0"	33	33'- 0"	6	6'- 0"	5	8"	33'-11"	5	8"	35'- 0"	3	8"	3'- 11"	7'- 8"	4	8"	2'- 9"	6'- 0"	8'- 6"	5	6"	10'- 7"	4	10½"	10'- 7"
8	10	18"	18"	10½"	8"	33	33'- 0"	33	33'- 0"	8	8'- 0"	5	8"	34'-1"	5	8"	35'- 4"	3	8"	4'- 4"	8'- 6"	5	8"	2'- 11"	7'- 2"	9'- 9"	6	8	12'- 7"	4	10½"	12'- 7"
9	4	20½"	20½"	8"	8"	37	37'- 0"	37	37'- 0"	2	2'- 0"	6	9"	37'-11"	6	9"	39'- 0"	--	---	-----	-----	4	9"	3'- 2"	4'- 3"	7'- 1"	4	12"	7'- 0"	4	10"	7'- 0"
9	6	20½"	20½"	8"	8"	37	37'- 0"	37	37'- 0"	4	4'- 0"	6	9"	37'-11"	6	9"	39'- 0"	--	---	-----	-----	4	9"	3'- 2"	5'- 3"	8'- 1"	5	12"	9'- 0"	4	10"	9'- 0"
9	8	20"	20"	8"	8"	37	37'- 0"	37	37'- 0"	6	6'- 0"	6	9"	37'-8"	6	9"	39'- 0"	--	---	-----	-----	5	9"	3'- 4"	6'- 5"	9'- 4"	5	6"	11'- 0"	4	10"	11'- 0"
9	10	20"	20"	10½"	8"	37	37'- 0"	37	37'- 0"	8	8'- 0"	6	9"	37'-10"	6	9"	39'- 4"	--	---	-----	-----	6	9"	3'- 5"	7'- 6"	10'- 6"	6	9"	13'- 0"	4	10"	13'- 0"
9	12	20"	20"	13"	8"	37	37'- 0"	37	37'- 0"	10	10'- 0"	6	9"	38'-0"	6	9"	39'- 9"	3	9"	4'- 11"	9'- 8"	7	9"	3'- 7"	8'- 9"	11'- 10"	7	10½"	15'- 0"	4	10"	15'- 0"
10	4	22½"	22½"	8"	8"	41	41'- 0"	41	41'- 0"	2	2'- 0"	6	9"	41'-11"	6	9"	43'- 0"	--	---	-----	-----	4	9"	3'- 2"	4'- 5"	7'- 3"	4	12"	7'- 5"	4	10"	7'- 5"
10	6	22½"	22½"	8"	8"	41	41'- 0"	41	41'- 0"	4	4'- 0"	6	9"	41'-11"	6	9"	43'- 0"	--	---	-----	-----	4	9"	3'- 2"	5'- 5"	8'- 3"	5	12"	9'- 4"	4	10"	9'- 4"
10	8	22½"	22½"	8"	8"	41	41'- 0"	41	41'- 0"	6	6'- 0"	6	9"	41'-11"	6	9"	43'- 0"	3	9"	4'- 4"	8'- 6"	4	9"	3'- 2"	6'- 5"	9'- 3"	6	9"	11'- 4"	4	10"	11'- 4"
10	10	22½"	22½"	10"	8"	41	41'- 0"	41	41'- 0"	8	8'- 0"	7	9"	41'-9"	6	9"	43'- 3"	--	---	-----	-----	6	9"	4'- 1"	7'- 9"	11'- 5"	6	6"	13'- 4"	4	10"	13'- 4"
10	12	22½"	22½"	12½"	8"	41	41'- 0"	41	41'- 0"	10	10'- 0"	6	9"	42'-2"	6	9"	43'- 9"	3	9"	5'- 2"	10'- 1"	6	9"	3'- 5"	8'- 9"	11'- 9"	6	7½"	15'- 4"	4	9"	15'- 4"
12	6	27"	27"	8"	8"	49	49'- 0"	49	49'- 0"	4	4'- 0"	6	8"	49'-11"	6	8"	51'- 0"	--	---	-----	-----	4	8"	3'- 2"	5'- 9"	8'- 8"	5	11"	10'- 1"	4	9"	10'- 1"
12	8	27"	27"	8"	8"	49	49'- 0"	49	49'- 0"	6	6'- 0"	6	8"	49'-11"	6	8"	51'- 0"	--	---	-----	-----	4	8"	3'- 2"	6'- 9"	9'- 8"	5	5½"	12'- 1"	4	9"	12'- 1"
12	10	27"	27"	9"	8"	49	49'- 0"	49	49'- 0"	8	8'- 0"	6	8"	49'-10"	6	8"	51'- 1"	3	8"	5'- 2"	10'- 0"	5	8"	3'- 4"	7'- 11"	10'- 11"	7	8"	14'- 1"	4	9"	14'- 1"
12	12	27"	27"	12"	8"	49	49'- 0"	49	49'- 0"	10	10'- 0"	6	8"	50'-4"	6	8"	51'- 7"	4	8"	5'- 6"	10'- 9"	5	8"	3'- 4"	8'- 11"	11'- 11"	5	5"	16'- 2"	4	9"	16'- 2"

A COPY OF THE ORIGINAL SEALED AND SIGNED DRAWING IS ON FILE IN THE CENTRAL OFFICE

VDOT
ROAD AND BRIDGE STANDARDS

SHEET 1 OF 2 | REVISION DATE
1005.15 | 07/11

QUADRUPLE BOX CULVERTS

30 TO 40 FT. FILLS

VIRGINIA DEPARTMENT OF TRANSPORTATION

SPECIFICATION REFERENCE

BCQ-40

FOR TYPICAL SECTION, NOTES AND OTHER DETAILS, REFER TO STANDARD BCQ-DT.

SPAN (FT.)	HGHT (FT.)	REINFORCING STEEL BT1 SIZE	SPACING C-C	a	b	c	d	e	f	g	LENGTH	NO. BL1 #4 BARS	NO. BL2 #3 BARS	REINFORCING STEEL (LBS/LONG. JT)	QUAN./LF CONCRETE CLASS A4 (CY/LF)	REINFORCING STEEL (LBS/LF)	HEADWALLS G HEADWALL LENGTH	HW1 SIZE	HW1 LENGTH	NO. HW2 BARS	NO. HW3 BARS	INLET CONCRETE CL. A4 (CY)	INLET REINFORCING STEEL (LBS)	OUTLET CONCRETE CL. A4 (CY)	OUTLET REINFORCING STEEL (LBS)	WINGWALL
3	3	4	12"	2'- 7"	0'- 4"	1'- 10"	0'- 5 1/8"	0'- 3 1/4"	15'- 0"	1'- 3"	15'- 7"	60	20	57.160	1.283	151.587	16'-10"	6	16'- 6"	3	12	2.222	137.876	2.191	99.132	A
3	4	4	12"	2'- 7"	0'- 4"	1'- 10"	0'- 5 1/8"	0'- 3 1/4"	15'- 0"	1'- 3"	15'- 7"	60	30	60.690	1.406	158.132	16'-10"	6	16'- 6"	3	15	2.333	148.230	2.284	99.132	C
4	3	4	12"	3'- 3"	0'- 6"	2'- 3"	0'- 8"	0'- 5 1/4"	19'- 0"	1'- 6"	20'- 0"	76	20	70.520	1.717	170.567	20'-10"	6	20'- 6"	3	12	2.565	161.908	2.547	123.164	B
4	4	4	12"	3'- 3"	0'- 5 3/4"	2'- 3"	0'- 7 5/8"	0'- 5"	19'- 0"	1'- 6"	20'- 0"	76	30	74.050	1.810	180.660	20'-10"	6	20'- 6"	3	15	2.686	172.262	2.650	123.164	D
4	5	4	12"	3'- 3"	0'- 5 3/4"	2'- 3"	0'- 7 5/8"	0'- 5"	19'- 0"	1'- 6"	20'- 0"	76	40	77.580	1.933	191.100	20'-10"	6	20'- 6"	3	18	2.798	182.616	2.743	123.164	F
4	6	4	12"	3'- 3"	0'- 5 3/4"	2'- 3"	0'- 7 5/8"	0'- 5"	19'- 0"	1'- 6"	20'- 0"	76	50	81.110	2.054	221.508	20'-10"	6	20'- 6"	3	21	2.909	192.970	2.835	123.164	H
5	3	4	11"	3'- 10"	0'- 8"	2'- 8"	0'- 10 7/8"	0'- 7 1/4"	23'- 0"	1'- 9"	24'- 5"	92	20	83.880	2.249	209.714	24'-10"	6	24'- 6"	3	12	2.840	185.940	2.836	147.196	B
5	4	4	11"	3'- 10"	0'- 8"	2'- 8"	0'- 10 7/8"	0'- 7 1/4"	23'- 0"	1'- 9"	24'- 5"	92	30	87.410	2.372	220.276	24'-10"	6	24'- 6"	3	15	2.951	196.294	2.928	147.196	D
5	5	4	11"	3'- 10"	0'- 7 3/4"	2'- 8"	0'- 10 1/2"	0'- 7"	23'- 0"	1'- 9"	24'- 5"	92	40	90.940	2.459	230.479	24'-10"	6	24'- 6"	3	18	3.076	206.648	3.034	147.196	F
5	6	4	11"	3'- 10"	0'- 7 3/4"	2'- 8"	0'- 10 1/2"	0'- 7"	23'- 0"	1'- 9"	24'- 5"	92	50	94.470	2.580	256.318	24'-10"	6	24'- 6"	3	21	3.187	217.002	3.127	147.196	H
5	7	4	11"	3'- 10"	0'- 7 3/4"	2'- 8"	0'- 10 1/2"	0'- 7"	23'- 0"	1'- 9"	24'- 5"	92	60	98.000	2.701	283.434	24'-10"	6	24'- 6"	3	24	3.298	227.356	3.220	147.196	J
6	4	4	9"	4'- 6"	0'- 10"	3'- 0"	1'- 5 6"	0'- 9 1/4"	27'- 0"	2'- 1"	28'- 10"	108	30	100.770	3.001	281.508	28'-10"	6	28'- 6"	3	15	3.193	220.326	3.183	171.228	D
6	5	4	9"	4'- 6"	0'- 10"	3'- 0"	1'- 5 6"	0'- 9 1/4"	27'- 0"	2'- 1"	28'- 10"	108	40	104.300	3.124	292.393	28'-10"	6	28'- 6"	3	18	3.304	230.680	3.276	171.228	F
6	6	4	9"	4'- 6"	0'- 10"	3'- 0"	1'- 5 6"	0'- 9 1/4"	27'- 0"	2'- 1"	28'- 10"	108	50	107.830	3.246	309.279	28'-10"	6	28'- 6"	3	21	3.416	241.034	3.369	171.228	H
6	7	4	9"	4'- 6"	0'- 10"	3'- 0"	1'- 5 6"	0'- 9 1/4"	27'- 0"	2'- 1"	28'- 10"	108	60	111.360	3.367	341.882	28'-10"	6	28'- 6"	3	24	3.511	251.388	3.445	171.228	J
6	8	4	9"	4'- 7"	0'- 10"	3'- 0"	1'- 5 6"	0'- 9 1/4"	27'- 1"	2'- 1"	28'- 11"	108	70	114.890	3.520	370.070	28'-10"	6	28'- 6"	3	27	3.622	261.742	3.538	171.228	L
7	4	5	9"	5'- 1"	1'- 1/2"	3'- 5"	1'- 5 1/8"	0'- 11 5/8"	31'- 0"	2'- 3"	33'- 4"	124	30	114.130	3.820	414.276	32'-10"	6	32'- 6"	3	15	3.391	244.358	3.395	195.260	E
7	6	5	9"	5'- 2"	1'- 0"	3'- 5"	1'- 4 3/8"	0'- 11 1/8"	31'- 0"	2'- 4"	33'- 3"	124	50	121.190	3.968	441.749	32'-10"	6	32'- 6"	3	21	3.614	265.066	3.580	195.260	I
7	8	5	9"	5'- 2"	0'- 11 3/4"	3'- 5"	1'- 4"	0'- 10 7/8"	31'- 0"	2'- 5"	33'- 2"	124	70	128.250	4.162	500.982	32'-10"	6	32'- 6"	3	27	3.836	285.774	3.766	195.260	M
7	10	5	9"	5'- 5"	0'- 11 3/4"	3'- 5"	1'- 4"	0'- 10 7/8"	31'- 5"	2'- 5"	33'- 7"	124	90	135.310	4.599	567.669	32'-10"	6	32'- 6"	3	33	4.020	306.482	3.912	195.260	Q
8	4	5	9"	5'- 9"	1'- 2 1/2"	3'- 10"	1'- 7 7/8"	1'- 1 5/8"	35'- 0"	2'- 6"	37'- 9"	140	30	127.490	4.660	464.611	36'-10"	6	36'- 6"	3	15	3.521	268.390	3.538	219.292	E
8	6	5	8"	5'- 9"	1'- 2"	3'- 10"	1'- 7 1/8"	1'- 1 1/8"	35'- 0"	2'- 7"	37'- 8"	140	50	134.550	4.792	533.473	36'-10"	6	36'- 6"	3	21	3.744	289.098	3.723	219.292	I
8	8	5	8"	5'- 10"	1'- 1 3/4"	3'- 10"	1'- 6 7/8"	1'- 7/8"	35'- 0"	2'- 8"	37'- 7"	140	70	141.610	4.980	597.180	36'-10"	6	36'- 6"	3	27	3.966	309.806	3.909	219.292	M
8	10	5	8"	6'- 0"	1'- 2"	3'- 10"	1'- 7 1/8"	1'- 1 1/8"	35'- 4"	2'- 7"	38'- 1"	140	90	148.670	5.477	658.739	36'-10"	6	36'- 6"	3	33	4.149	330.514	4.054	219.292	Q
9	4	6	9"	6'- 5"	1'- 4 1/2"	4'- 3"	1'- 10 5/8"	1'- 3 1/2"	39'- 0"	2'- 10"	42'- 1"	156	30	140.850	5.587	661.124	40'-10"	6	40'- 6"	3	15	3.576	292.422	3.606	243.324	E
9	6	6	9"	6'- 5"	1'- 4 1/2"	4'- 3"	1'- 10 5/8"	1'- 3 1/2"	39'- 0"	2'- 10"	42'- 1"	156	50	147.910	5.832	691.310	40'-10"	6	40'- 6"	3	21	3.799	313.130	3.792	243.324	I
9	8	6	9"	6'- 5"	1'- 4"	4'- 3"	1'- 9 7/8"	1'- 3"	39'- 0"	2'- 11"	42'- 0"	156	70	154.970	5.952	756.272	40'-10"	6	40'- 6"	3	27	4.022	333.838	3.977	243.324	M
9	10	6	9"	6'- 8"	1'- 4"	4'- 3"	1'- 9 7/8"	1'- 3"	39'- 4"	2'- 11"	42'- 5"	156	90	162.030	6.400	816.084	40'-10"	6	40'- 6"	3	33	4.203	354.546	4.122	243.324	Q
9	12	6	9"	6'- 10"	1'- 4"	4'- 3"	1'- 9 7/8"	1'- 3"	39'- 9"	2'- 11"	42'- 10"	156	110	169.090	6.907	919.136	40'-10"	6	40'- 6"	3	39	4.279	375.254	4.159	243.324	U
10	4	6	9"	7'- 0"	1'- 6 1/2"	4'- 8"	2'- 1 3/8"	1'- 5 1/2"	43'- 0"	3'- 1"	46'- 6"	172	30	154.210	6.623	724.174	44'-10"	6	44'- 6"	3	15	3.566	316.454	3.609	267.356	F
10	6	6	9"	7'- 0"	1'- 6 1/2"	4'- 8"	2'- 1 3/8"	1'- 5 1/2"	43'- 0"	3'- 1"	46'- 6"	172	50	161.270	6.868	754.611	44'-10"	6	44'- 6"	3	21	3.788	337.162	3.795	267.356	J
10	8	6	9"	7'- 0"	1'- 6 1/2"	4'- 8"	2'- 1 3/8"	1'- 5 1/2"	43'- 0"	3'- 1"	46'- 6"	172	70	168.330	7.110	818.277	44'-10"	6	44'- 6"	3	27	4.011	357.870	3.980	267.356	N
10	10	7	9"	7'- 2"	1'- 6 1/2"	4'- 8"	2'- 1 1/4"	1'- 5 1/4"	43'- 3"	3'- 1"	46'- 10"	172	90	175.390	7.509	1041.296	44'-10"	6	44'- 6"	3	33	4.192	378.578	4.123	267.356	R
10	12	6	9"	7'- 5"	1'- 6 1/2"	4'- 8"	2'- 1 3/8"	1'- 5 1/2"	43'- 9"	3'- 1"	47'- 3"	172	110	182.450	8.030	960.092	44'-10"	6	44'- 6"	3	39	4.264	399.286	4.157	267.356	V
12	6	6	8"	8'- 3"	1'- 11"	5'- 5"	2'- 7 3/4"	1'- 10"	51'- 0"	3'- 7"	55'- 5"	204	50	187.990	9.388	971.858	52'-10"	6	52'- 6"	3	21	3.684	385.226	3.717	315.420	J
12	8	6	8"	8'- 3"	1'- 11"	5'- 5"	2'- 7 3/4"	1'- 10"	51'- 0"	3'- 7"	55'- 5"	204	70	195.050	9.631	1026.313	52'-10"	6	52'- 6"	3	27	3.907	405.934	3.902	315.420	N
12	10	6	8"	8'- 4"	1'- 11"	5'- 5"	2'- 7 3/4"	1'- 10"	51'- 1"	3'- 7"	55'- 7"	204	90	202.110	9.959	1128.892	52'-10"	6	52'- 6"	3	33	4.085	426.642	4.043	315.420	R
12	12	6	8"	8'- 7"	1'- 11"	5'- 5"	2'- 7 3/4"	1'- 10"	51'- 7"	3'- 7"	56'- 1"	204	110	209.170	10.521	1174.588	52'-10"	6	52'- 6"	3	39	4.151	447.350	4.071	315.420	V

A COPY OF THE ORIGINAL SEALED AND SIGNED DRAWING IS ON FILE IN THE CENTRAL OFFICE.

SPECIFICATION REFERENCE

QUADRUPLE BOX CULVERTS

30 TO 40 FT. FILLS

VIRGINIA DEPARTMENT OF TRANSPORTATION

VDOT

ROAD AND BRIDGE STANDARDS

REVISION DATE 07/11

SHEET 2 OF 2

1005.16

BCQ-50

FOR TYPICAL SECTION, NOTES AND OTHER DETAILS, REFER TO STANDARD BCQ-DT.

DIMENSIONS						REINFORCING STEEL																										
SPAN	HGHT	T1	T2	T3	T4							BH1			BH2			BH3				BH4					BV1			BV2		
(FT.)	(FT.)	TOP SLAB	BOTTOM SLAB	EXTERIOR WALL (IN.)	INTERIOR WALL (IN.)	A	B	C	D	E	F	SIZE	SPACING C-C	LENGTH	SIZE	SPACING C-C	LENGTH	SIZE	SPACING C-C	a	LENGTH	SIZE	SPACING C-C	a	b	LENGTH	SIZE	SPACING C-C	LENGTH	SIZE	SPACING C-C	LENGTH
3	3	9"	9"	8"	8"	13	13'- 0"	13	13'- 0"	1	1'- 0"	4	12"	13'- 11"	4	12"	15'- 0"	--	---	-----	-----	4	12"	2'- 4"	2'- 9"	4'- 10"	4	12"	4'- 2"	4	12"	4'- 2"
3	4	9"	9"	8"	8"	13	13'- 0"	13	13'- 0"	2	2'- 0"	4	12"	13'- 11"	4	12"	15'- 0"	--	---	-----	-----	4	12"	2'- 4"	3'- 3"	5'- 4"	4	12"	5'- 2"	4	12"	5'- 2"
4	3	11½"	11½"	8"	8"	17	17'- 0"	17	17'- 0"	1	1'- 0"	4	12"	17'- 11"	4	12"	19'- 0"	--	---	-----	-----	4	12"	2'- 4"	3'- 0"	5'- 0"	4	12"	4'- 7"	4	12"	4'- 7"
4	4	11¼"	11¼"	8"	8"	17	17'- 0"	17	17'- 0"	2	2'- 0"	4	12"	17'- 11"	4	12"	19'- 0"	--	---	-----	-----	4	12"	2'- 4"	3'- 6"	5'- 6"	4	12"	5'- 6"	4	12"	5'- 6"
4	5	11"	11"	8"	8"	17	17'- 0"	17	17'- 0"	3	3'- 0"	4	12"	17'- 11"	4	12"	19'- 0"	--	---	-----	-----	4	12"	2'- 4"	3'- 11"	6'- 0"	5	12"	6'- 6"	4	12"	6'- 6"
4	6	11¼"	11¼"	8"	8"	17	17'- 0"	17	17'- 0"	4	4'- 0"	4	12"	17'- 11"	4	12"	19'- 0"	4	12"	3'- 0"	5'- 9"	4	12"	2'- 4"	4'- 6"	6'- 6"	5	9"	7'- 6"	4	12"	7'- 6"
5	3	13¾"	13¾"	8"	8"	21	21'- 0"	21	21'- 0"	1	1'- 0"	4	10"	21'- 11"	4	10"	23'- 0"	--	---	-----	-----	4	10"	2'- 4"	3'- 2"	5'- 3"	4	12"	4'- 11"	4	12"	4'- 11"
5	4	13½"	13½"	8"	8"	21	21'- 0"	21	21'- 0"	2	2'- 0"	4	9"	21'- 11"	4	9"	23'- 0"	--	---	-----	-----	4	9"	2'- 4"	3'- 8"	5'- 8"	4	12"	5'- 11"	4	12"	5'- 11"
5	5	13½"	13½"	8"	8"	21	21'- 0"	21	21'- 0"	3	3'- 0"	4	9"	21'- 11"	4	9"	23'- 0"	--	---	-----	-----	4	9"	2'- 4"	4'- 2"	6'- 2"	5	12"	6'- 11"	4	12"	6'- 11"
5	6	13½"	13½"	8"	8"	21	21'- 0"	21	21'- 0"	4	4'- 0"	4	10"	21'- 11"	4	10"	23'- 0"	3	10"	3'- 2"	6'- 2"	4	10"	2'- 4"	4'- 8"	6'- 8"	5	10"	7'- 11"	4	12"	7'- 11"
5	7	13½"	13½"	8½"	8"	21	21'- 0"	21	21'- 0"	5	5'- 0"	4	10"	21'- 9"	4	10"	23'- 1"	--	---	-----	-----	5	10"	2'- 6"	5'- 4"	7'- 5"	6	10½"	8'- 11"	4	12"	8'- 11"
6	4	16½"	16½"	8"	8"	25	25'- 0"	25	25'- 0"	2	2'- 0"	4	9"	25'- 11"	5	9"	27'- 0"	--	---	-----	-----	4	9"	2'- 4"	3'- 11"	5'- 11"	4	12"	6'- 5"	4	11"	6'- 5"
6	5	16½"	16½"	8"	8"	25	25'- 0"	25	25'- 0"	3	3'- 0"	4	9"	25'- 11"	5	9"	27'- 0"	--	---	-----	-----	4	9"	2'- 4"	4'- 5"	6'- 5"	5	12"	7'- 5"	4	11"	7'- 5"
6	6	16½"	16½"	8"	8"	25	25'- 0"	25	25'- 0"	4	4'- 0"	4	9"	25'- 11"	5	9"	27'- 0"	--	---	-----	-----	4	9"	2'- 4"	4'- 11"	6'- 11"	5	9½"	8'- 4"	4	11"	8'- 4"
6	7	16"	16"	8"	8"	25	25'- 0"	25	25'- 0"	5	5'- 0"	4	9"	25'- 11"	5	9"	27'- 0"	3	9"	3'- 7"	7'- 0"	4	9"	2'- 4"	5'- 4"	7'- 5"	5	6½"	9'- 3"	4	11"	9'- 3"
6	8	16"	16"	9½"	8"	25	25'- 0"	25	25'- 0"	6	6'- 0"	4	9"	25'- 11"	5	9"	27'- 3"	--	---	-----	-----	5	9"	2'- 6"	6'- 0"	8'- 2"	5	5"	10'- 3"	4	11"	10'- 3"
7	4	19"	19"	8"	8"	29	29'- 0"	29	29'- 0"	2	2'- 0"	5	8"	29'- 11"	5	8"	31'- 0"	--	---	-----	-----	4	8"	2'- 9"	4'- 2"	6'- 7"	4	12"	6'- 10"	4	10"	6'- 10"
7	6	18½"	18½"	8"	8"	29	29'- 0"	29	29'- 0"	4	4'- 0"	5	8"	29'- 11"	5	8"	31'- 0"	--	---	-----	-----	4	8"	2'- 9"	5'- 1"	7'- 6"	5	9½"	8'- 9"	4	10"	8'- 9"
7	8	18½"	18½"	9½"	8"	29	29'- 0"	29	29'- 0"	6	6'- 0"	5	9"	29'- 11"	5	9"	31'- 3"	--	---	-----	-----	5	9"	2'- 11"	6'- 3"	8'- 9"	6	7½"	10'- 9"	4	10"	10'- 9"
7	10	18"	18"	11½"	8"	29	29'- 0"	29	29'- 0"	8	8'- 0"	5	9"	30'- 3"	5	9"	31'- 7"	4	9"	4'- 4"	8'- 5"	5	9"	2'- 11"	7'- 2"	9'- 9"	7	9"	12'- 7"	4	10"	12'- 7"
8	4	21"	21"	8"	8"	33	33'- 0"	33	33'- 0"	2	2'- 0"	6	9"	33'- 11"	5	9"	35'- 0"	--	---	-----	-----	4	9"	3'- 2"	4'- 3"	7'- 2"	4	12"	7'- 2"	4	10"	7'- 2"
8	6	21"	21"	8"	8"	33	33'- 0"	33	33'- 0"	4	4'- 0"	6	9"	33'- 11"	5	9"	35'- 0"	--	---	-----	-----	4	9"	3'- 2"	5'- 3"	8'- 2"	5	9"	9'- 1"	4	10"	9'- 1"
8	8	21"	21"	9"	8"	33	33'- 0"	33	33'- 0"	6	6'- 0"	6	9"	33'- 10"	5	9"	35'- 1"	--	---	-----	-----	5	9"	3'- 4"	6'- 5"	9'- 5"	5	4½"	11'- 1"	4	10"	11'- 1"
8	10	20½"	20½"	11½"	8"	33	33'- 0"	33	33'- 0"	8	8'- 0"	6	9"	34'- 0"	5	9"	35'- 6"	--	---	-----	-----	6	9"	3'- 5"	7'- 7"	10'- 7"	7	9"	13'- 0"	4	10"	13'- 0"
9	4	23½"	23½"	8"	8"	37	37'- 0"	37	37'- 0"	2	2'- 0"	6	9"	37'- 11"	6	9"	39'- 0"	--	---	-----	-----	4	9"	3'- 2"	4'- 6"	7'- 4"	4	12"	7'- 7"	4	10"	7'- 7"
9	6	23½"	23½"	8"	8"	37	37'- 0"	37	37'- 0"	4	4'- 0"	6	9"	37'- 11"	6	9"	39'- 0"	--	---	-----	-----	4	9"	3'- 2"	5'- 6"	8'- 4"	5	8"	9'- 6"	4	10"	9'- 6"
9	8	23"	23"	8½"	8"	37	37'- 0"	37	37'- 0"	6	6'- 0"	6	9"	37'- 9"	6	9"	39'- 0"	--	---	-----	-----	5	9"	3'- 4"	6'- 8"	9'- 7"	6	7½"	11'- 6"	4	10"	11'- 6"
9	10	23"	23"	11½"	8"	37	37'- 0"	37	37'- 0"	8	8'- 0"	6	9"	38'- 0"	6	9"	39'- 6"	--	---	-----	-----	6	9"	3'- 5"	7'- 9"	10'- 9"	6	6"	13'- 6"	4	10"	13'- 6"
9	12	23"	23"	14"	8"	37	37'- 0"	37	37'- 0"	10	10'- 0"	6	9"	38'- 2"	6	9"	40'- 0"	3	9"	5'- 2"	10'- 2"	7	9"	3'- 7"	9'- 0"	12'- 1"	6	7"	15'- 6"	4	10"	15'- 6"
10	4	26"	26"	8"	8"	41	41'- 0"	41	41'- 0"	2	2'- 0"	7	9"	41'- 11"	6	9"	43'- 0"	--	---	-----	-----	4	9"	3'- 10"	4'- 8"	8'- 3"	4	12"	8'- 0"	4	9"	8'- 0"
10	6	26"	26"	8"	8"	41	41'- 0"	41	41'- 0"	4	4'- 0"	6	9"	41'- 11"	6	9"	43'- 0"	--	---	-----	-----	4	9"	3'- 2"	5'- 8"	8'- 7"	5	8"	10'- 0"	4	9"	10'- 0"
10	8	26"	26"	8"	8"	41	41'- 0"	41	41'- 0"	6	6'- 0"	6	9"	41'- 11"	6	9"	43'- 0"	3	9"	4'- 8"	9'- 1"	4	9"	3'- 2"	6'- 8"	9'- 7"	5	4½"	12'- 0"	4	9"	12'- 0"
10	10	26"	26"	11"	8"	41	41'- 0"	41	41'- 0"	8	8'- 0"	6	9"	42'- 2"	6	9"	43'- 6"	3	9"	5'- 0"	9'- 10"	5	9"	3'- 4"	7'- 10"	10'- 10"	6	6"	14'- 0"	4	9"	14'- 0"
10	12	26"	26"	14"	8"	41	41'- 0"	41	41'- 0"	10	10'- 0"	6	9"	42'- 5"	6	9"	44'- 0"	3	9"	5'- 5"	10'- 8"	6	9"	3'- 5"	9'- 0"	12'- 0"	7	9½"	16'- 0"	4	9"	16'- 0"
12	6	31"	31"	8"	8"	49	49'- 0"	49	49'- 0"	4	4'- 0"	7	9"	49'- 11"	7	9"	51'- 0"	--	---	-----	-----	4	9"	3'- 10"	6'- 2"	9'- 8"	5	7"	10'- 10"	4	7½"	10'- 10"
12	8	30½"	30½"	8"	8"	49	49'- 0"	49	49'- 0"	6	6'- 0"	7	9"	49'- 11"	7	9"	51'- 0"	3	9"	5'- 0"	9'- 10	4	9"	3'- 10"	7'- 1"	10'- 7"	6	6½"	12'- 8"	4	7½"	12'- 8"
12	10	30½"	30½"	9¾"	8"	49	49'- 0"	49	49'- 0"	8	8'- 0"	7	9"	49'- 8"	7	9"	51'- 3"	--	---	-----	-----	6	9"	4'- 1"	8'- 5"	12'- 1"	7	8"	14'- 8"	4	7½"	14'- 8"
12	12	31"	31"	13"	8"	49	49'- 0"	49	49'- 0"	10	10'- 0"	7	8"	50'- 3"	7	8"	51'- 9"	3	8"	5'- 10"	11'- 6"	6	8"	4'- 1"	9'- 5"	13'- 1"	9	12"	16'- 10"	4	7½"	16'- 10"

A COPY OF THE ORIGINAL SEALED AND SIGNED DRAWING IS ON FILE IN THE CENTRAL OFFICE

VDOT
ROAD AND BRIDGE STANDARDS

SHEET 1 OF 2 | REVISION DATE
1005.17 | 07/11

QUADRUPLE BOX CULVERTS

40 TO 50 FT. FILLS

VIRGINIA DEPARTMENT OF TRANSPORTATION

SPECIFICATION REFERENCE

BCQ-50

FOR TYPICAL SECTION, NOTES AND OTHER DETAILS, REFER TO STANDARD BCQ-DT.

SPAN (FT.)	HGHT (FT.)	REINFORCING STEEL BT1 SIZE	SPACING c-c	a	b	c	d	e	f	g	LENGTH	NO. BL1 #4 BARS	NO. BL2 #3 BARS	REINFORCING STEEL (LBS/LONG. JT)	QUAN./LF CONCRETE CLASS A4 (CY/LF)	REINFORCING STEEL (LBS/LF)	HEADWALLS G HEADWALL LENGTH	HW1 SIZE	HW1 LENGTH	NO. HW2 BARS	NO. HW3 BARS	INLET CONCRETE CL. A4 (CY)	INLET REINFORCING STEEL (LBS)	OUTLET CONCRETE CL. A4 (CY)	OUTLET REINFORCING STEEL (LBS)	WINGWALL
3	3	4	12"	2'- 6"	0'- 5"	1'- 10"	0'- 6⅝"	0'- 4¼"	15'- 0"	1'- 1"	15'- 10"	60	20	57.160	1.378	142.459	16'-10"	6	16'- 6"	3	12	2.194	137.876	2.163	99.132	A
3	4	4	12"	2'- 6"	0'- 5"	1'- 10"	0'- 6⅝"	0'- 4¼"	15'- 0"	1'- 1"	15'- 10"	60	30	60.690	1.501	152.899	16'-10"	6	16'- 6"	3	15	2.305	148.230	2.256	99.132	C
4	3	4	12"	3'- 1"	0'- 7½"	2'- 3"	0'- 10⅛"	0'- 6¾"	19'- 0"	1'- 3"	20'- 4"	76	20	70.520	1.896	172.650	20'-10"	6	20'- 6"	3	12	2.525	161.908	2.507	123.164	B
4	4	4	12"	3'- 1"	0'- 7¼"	2'- 3"	0'- 9¾"	0'- 6½"	19'- 0"	1'- 3"	20'- 3"	76	30	74.050	1.989	182.743	20'-10"	6	20'- 6"	3	15	2.626	172.262	2.590	123.164	D
4	5	4	12"	3'- 2"	0'- 7"	2'- 3"	0'- 9⅜"	0'- 6¼"	19'- 0"	1'- 4"	20'- 3"	76	40	77.580	2.082	197.711	20'-10"	6	20'- 6"	3	18	2.747	182.616	2.693	123.164	F
4	6	4	12"	3'- 1"	0'- 7¼"	2'- 3"	0'- 9¾"	0'- 6½"	19'- 0"	1'- 3"	20'- 3"	76	50	81.110	2.232	229.690	20'-10"	6	20'- 6"	3	21	2.849	192.970	2.775	123.164	H
5	3	4	10"	3'- 8"	0'- 9¾"	2'- 8"	1'- 1¼"	0'- 9"	23'- 0"	1'- 5"	24'- 10"	92	20	83.880	2.500	223.900	24'-10"	6	24'- 6"	3	12	2.774	185.940	2.770	147.196	B
5	4	4	9"	3'- 9"	0'- 9½"	2'- 8"	1'- 1"	0'- 8¾"	23'- 0"	1'- 6"	24'- 9"	92	30	87.410	2.586	248.666	24'-10"	6	24'- 6"	3	15	2.886	196.294	2.863	147.196	D
5	5	4	9"	3'- 9"	0'- 9½"	2'- 8"	1'- 1"	0'- 8¾"	23'- 0"	1'- 6"	24'- 9"	92	40	90.940	2.708	264.739	24'-10"	6	24'- 6"	3	18	2.997	206.648	2.955	147.196	F
5	6	4	10"	3'- 9"	0'- 9½"	2'- 8"	1'- 1"	0'- 8¾"	23'- 0"	1'- 6"	24'- 9"	92	50	94.470	2.831	275.931	24'-10"	6	24'- 6"	3	21	3.108	217.002	3.048	147.196	H
5	7	4	10"	3'- 9"	0'- 9½"	2'- 8"	1'- 1"	0'- 8¾"	23'- 1"	1'- 6"	24'- 10"	92	60	98.000	2.981	299.076	24'-10"	6	24'- 6"	3	24	3.220	227.356	3.141	147.196	J
6	4	4	9"	4'- 4"	1'- ½"	3'- 0"	1'- 5⅛"	0'- 11¾"	27'- 0"	1'- 8"	29'- 4"	108	30	100.770	3.420	314.735	28'-10"	6	28'- 6"	3	15	3.082	220.326	3.072	171.228	E
6	5	4	9"	4'- 4"	1'- ½"	3'- 0"	1'- 5⅛"	0'- 11¾"	27'- 0"	1'- 8"	29'- 4"	108	40	104.300	3.542	331.548	28'-10"	6	28'- 6"	3	18	3.193	230.680	3.165	171.228	G
6	6	4	9"	4'- 4"	1'- ½"	3'- 0"	1'- 5⅛"	0'- 11¾"	27'- 0"	1'- 8"	29'- 4"	108	50	107.830	3.665	348.168	28'-10"	6	28'- 6"	3	21	3.305	241.034	3.258	171.228	I
6	7	4	9"	4'- 4"	1'- 0"	3'- 0"	1'- 4½"	0'- 11¼"	27'- 0"	1'- 9"	29'- 3"	108	60	111.360	3.701	385.056	28'-10"	6	28'- 6"	3	24	3.400	251.388	3.334	171.228	K
6	8	4	9"	4'- 6"	1'- 0"	3'- 0"	1'- 4½"	0'- 11¼"	27'- 3"	1'- 9"	29'- 6"	108	70	114.890	3.921	414.988	28'-10"	6	28'- 6"	3	27	3.544	261.742	3.460	171.228	M
7	4	5	8"	4'- 11"	1'- 3"	3'- 5"	1'- 8⅝"	1'- 2⅛"	31'- 0"	1'- 10"	33'- 10"	124	30	114.130	4.300	458.908	32'-10"	6	32'- 6"	3	15	3.217	244.358	3.221	195.260	E
7	6	5	8"	4'- 11"	1'- 2½"	3'- 5"	1'- 7⅞"	1'- 1⅝"	31'- 0"	1'- 11"	33'- 9"	124	50	121.190	4.448	493.091	32'-10"	6	32'- 6"	3	21	3.459	265.066	3.426	195.260	I
7	8	5	9"	5'- 1"	1'- 2½"	3'- 5"	1'- 7⅞"	1'- 1⅝"	31'- 3"	1'- 11"	34'- 0"	124	70	128.250	4.795	525.762	32'-10"	6	32'- 6"	3	27	3.682	285.774	3.611	195.260	M
7	10	5	9"	5'- 3"	1'- 2"	3'- 5"	1'- 7⅞"	1'- 1⅛"	31'- 7"	2'- 0"	34'- 3"	124	90	135.310	5.118	597.629	32'-10"	6	32'- 6"	3	33	3.746	306.482	3.637	195.260	Q
8	4	6	9"	5'- 7"	1'- 5"	3'- 10"	1'- 11¼"	1'- 4"	35'- 0"	2'- 2"	38'- 3"	140	30	127.490	5.198	560.606	36'-10"	6	36'- 6"	3	15	3.275	268.390	3.292	219.292	E
8	6	6	9"	5'- 7"	1'- 5"	3'- 10"	1'- 11¼"	1'- 4"	35'- 0"	2'- 2"	38'- 3"	140	50	134.550	5.442	597.229	36'-10"	6	36'- 6"	3	21	3.498	289.098	3.477	219.292	I
8	8	6	9"	5'- 8"	1'- 5"	3'- 10"	1'- 11¼"	1'- 4"	35'- 1"	2'- 2"	38'- 5"	140	70	141.610	5.754	674.797	36'-10"	6	36'- 6"	3	27	3.743	309.806	3.685	219.292	M
8	10	6	9"	5'- 11"	1'- 4½"	3'- 10"	1'- 10⅝"	1'- 3½"	35'- 6"	2'- 3"	38'- 8"	140	90	148.670	6.106	736.173	36'-10"	6	36'- 6"	3	33	3.822	330.514	3.726	219.292	Q
9	4	6	9"	6'- 2"	1'- 7½"	4'- 3"	2'- 2⅞"	1'- 6½"	39'- 0"	2'- 4"	42'- 9"	156	30	140.850	6.315	667.572	40'-10"	6	40'- 6"	3	15	3.289	292.422	3.319	243.324	F
9	6	6	9"	6'- 2"	1'- 7½"	4'- 3"	2'- 2⅞"	1'- 6½"	39'- 0"	2'- 4"	42'- 9"	156	50	147.910	6.559	708.128	40'-10"	6	40'- 6"	3	21	3.512	313.130	3.505	243.324	J
9	8	6	9"	6'- 3"	1'- 7"	4'- 3"	2'- 2⅛"	1'- 6"	39'- 0"	2'- 5"	42'- 9"	156	70	154.970	6.716	772.935	40'-10"	6	40'- 6"	3	27	3.760	333.838	3.716	243.324	N
9	10	6	9"	6'- 6"	1'- 7"	4'- 3"	2'- 2⅛"	1'- 6"	39'- 6"	2'- 5"	43'- 3"	156	90	162.030	7.219	854.017	40'-10"	6	40'- 6"	3	33	3.835	354.546	3.752	243.324	R
9	12	6	9"	6'- 8"	1'- 7"	4'- 3"	2'- 2⅛"	1'- 6"	40'- 0"	2'- 5"	43'- 8"	156	110	169.090	7.747	939.496	40'-10"	6	40'- 6"	3	39	3.941	375.254	3.820	243.324	V
10	4	7	9"	6'- 9"	1'- 10"	4'- 8"	2'- 6¼"	1'- 8¾"	43'- 0"	2'- 6"	47'- 2"	172	30	154.210	7.549	867.051	44'-10"	6	44'- 6"	3	15	3.280	316.454	3.324	267.356	F
10	6	6	9"	6'- 9"	1'- 10"	4'- 8"	2'- 6⅜"	1'- 9"	43'- 0"	2'- 6"	47'- 3"	172	50	161.270	7.802	778.346	44'-10"	6	44'- 6"	3	21	3.532	337.162	3.538	267.356	J
10	8	6	9"	6'-9"	1'- 10"	4'- 8"	2'- 6⅜"	1'- 9"	43'- 0"	2'- 6"	47'- 3"	172	70	168.330	8.043	853.629	44'-10"	6	44'- 6"	3	27	3.754	357.870	3.723	267.356	N
10	10	6	9"	7'-0"	1'- 10"	4'- 8"	2'- 6⅜"	1'- 9"	43'- 6"	2'- 6"	47'- 9"	172	90	175.390	8.551	921.651	44'-10"	6	44'- 6"	3	33	3.826	378.578	3.756	267.356	R
10	12	6	9"	7'-3"	1'- 10"	4'- 8"	2'- 6⅜"	1'- 9"	44'- 0"	2'- 6"	48'- 3"	172	110	182.450	9.132	981.141	44'-10"	6	44'- 6"	3	39	3.903	399.286	3.796	267.356	V
12	6	7	9"	7'-11"	2'- 3"	5'- 5"	3'- 1⅜"	2'- 1¾"	51'- 0"	2'- 11"	56'- 3"	204	50	187.990	10.642	1154.370	52'-10"	6	52'- 6"	3	21	3.286	385.226	3.319	315.420	K
12	8	7	9"	8'-0"	2'- 2½"	5'- 5"	3'- ⅝"	2'- 1¼"	51'- 0"	3'- 0"	56'- 2"	204	70	195.050	10.724	1228.555	52'-10"	6	52'- 6"	3	27	3.509	405.934	3.504	315.420	O
12	10	7	9"	8'-1"	2'- 2½"	5'- 5"	3'- ⅝"	2'- 1¼"	51'- 3"	3'- 0"	56'- 5"	204	90	202.110	11.128	1309.696	52'-10"	6	52'- 6"	3	33	3.572	426.642	3.529	315.420	S
12	12	7	8"	8'-4"	2'- 3"	5'- 5"	3'- 1⅜"	2'- 1¾"	51'- 9"	2'- 11"	57'- 1"	204	110	209.170	11.884	1519.696	52'-10"	6	52'- 6"	3	39	3.582	447.350	3.500	315.420	W

A COPY OF THE ORIGINAL SEALED AND SIGNED DRAWING IS ON FILE IN THE CENTRAL OFFICE.

SPECIFICATION REFERENCE

QUADRUPLE BOX CULVERTS

40 TO 50 FT. FILLS

VIRGINIA DEPARTMENT OF TRANSPORTATION

VDOT

ROAD AND BRIDGE STANDARDS

REVISION DATE 07/11

SHEET 2 OF 2

1005.18

BCW-11

GENERAL NOTES

Specifications:

AASHTO LRFD Bridge Design Specifications 5th Edition 2010; 2011 Interim Revisions; and VDOT Modifications

Limits of validity for Standard Wingwall design

The standard wingwall designs are based on the following assumptions:

there is no structural connection between the wall and the box culvert
traffic surcharge loading is neglected.

Backfill

Backfill shall comprise granular material with an internal friction angle Φ' of at least 34 °. Cohesive backfill shall not be permitted. Compaction of the backfill material within a distance of one-half the height of the wall shall be by hand compactors only.

Drainage

The Contractor shall provide the drainage system indicated on Sheet 1.

The cost for the drainage system (including porous backfill, 6" diameter non-rigid tubing and other items required) shall be incidental to the cost bid for Concrete.

Concrete

All concrete shall be Class A4.

Reinforcement

Deformed reinforcing bars shall conform to ASTM A615, Grade 60. All reinforcing bar dimensions on the detailed drawings are to centers of bars except where otherwise noted and are subject to fabrication and construction tolerances.

Dimensions on bar diagrams are out-to-out of bars. Bars are straight unless otherwise shown.

The concrete cover to the outermost reinforcement bars shall be as follows:

Wall footing (all faces) 3" minimum cover
Wall stem (all faces) 2½" minimum cover

At the Contractor's option WV Series bars may be spliced at top of the footing in order to facilitate construction. Splice lengths shall be in accordance with Table C on Sheet 1. No additional compensation shall be provided for the increase in reinforcing steel quantity due to the splices.

Miscellaneous

Weepholes shall be placed at the lowest point feasible for free drainage away from the wing.

Four Type I Wings are to be used for straight crossings and skews up to 20°. Two Type I and two Type II Wings are to be used for skews from 25° to 45°. For skews above 45°, special design wings are required. The wingwall to be used for each culvert is shown on the BC series sheets.

The designs shown are applicable for a 45° skew with the roadway and other conditions indicated. Any change in these conditions invalidates these designs.

Quantities shown are for one wing.

WING	Wall Quantities		qr_min ksf High End	qr_min ksf Low End
	Concrete CY	Reinforcement LB		
A	1.7	162	1.10	0.57
B	2.1	193	1.28	0.57
C	2.5	221	1.50	0.57
D	2.7	236	1.68	0.63
E	3.2	265	1.88	0.63
F	3.7	299	2.08	0.63
G	4.1	353	2.13	0.76
H	4.6	382	2.40	0.76
I	5.4	460	2.52	0.84
J	6.2	509	2.65	0.84
K	7.1	619	2.78	1.02
L	7.4	653	2.92	1.02
M	8.1	718	3.18	1.02
N	8.9	922	3.19	1.15
O	9.7	968	3.44	1.15
P	10.7	1117	3.57	1.15
Q	11.5	1240	3.71	1.28
R	12.6	1379	3.84	1.28
S	13.5	1478	4.10	1.28
T	18.0	1815	4.28	1.56
U	18.7	2063	4.42	1.79
V	20.3	2318	4.55	1.79
W	22.3	2619	4.60	1.79
X	25.1	2822	4.74	1.98
Y	26.6	3173	4.95	1.98
Z	28.5	3423	5.10	1.98
AA	30.0	3765	5.32	1.98
BB	31.4	4553	5.47	2.11
CC	33.0	4977	5.70	2.11
DD	40.5	5679	6.11	2.28
EE	42.4	6262	6.15	2.53

A COPY OF THE ORIGINAL SEALED AND SIGNED DRAWING IS ON FILE IN THE CENTRAL OFFICE

VDOT
ROAD AND BRIDGE STANDARDS

SHEET 1 OF 8 | REVISION DATE
1006.01 | 07/12

WING DETAIL

1½: 1 FILL SLOPE - TYPE I

VIRGINIA DEPARTMENT OF TRANSPORTATION

SPECIFICATION REFERENCE

BCW-11

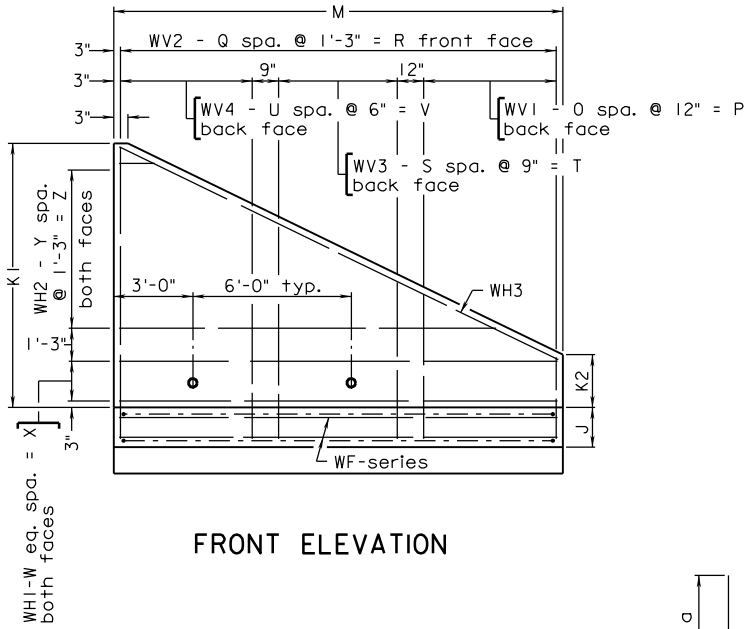

FRONT ELEVATION

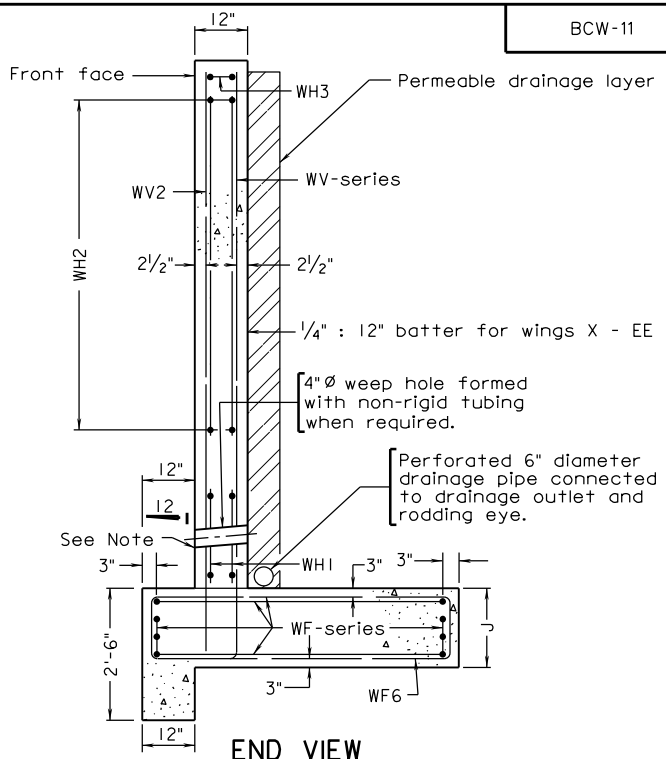

END VIEW

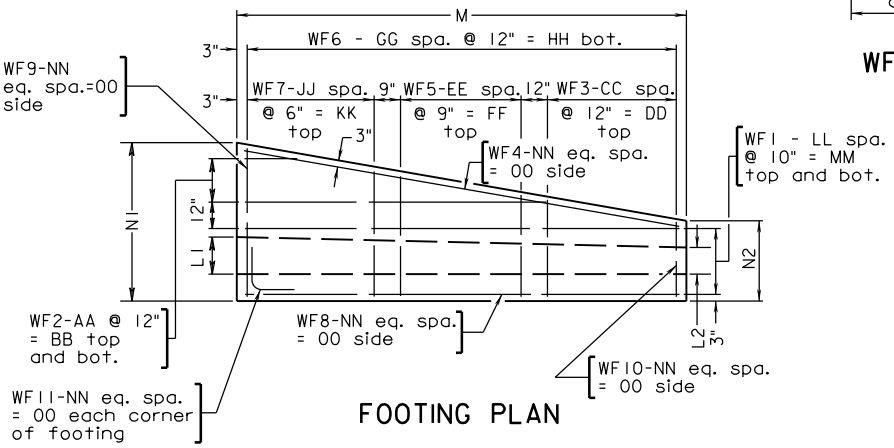

FOOTING PLAN

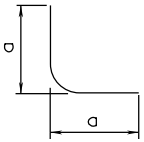

WF11

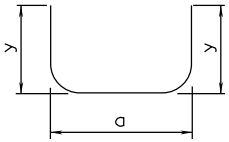

WF1 TO WF3, WF5 TO WF7

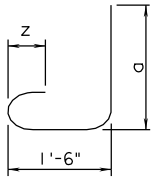

WV1, WV3, WV4

TABLE A	
Wall	y
A-W	9½"
X	1'-0½"
Y-CC	1'-3½"
DD-EE	1'-9½"

TABLE B		
Bar Size	Pin Dia.	Z
#3	2¼"	4"
#4	3"	4½"
#5	3¾"	5"
#6	4½"	6"
#7	5¼"	7"
#8	6"	8"
#9	9"	10⅛"

TABLE C	
Bar Size	Splice Length
#4	1'- 9"
#5	2'- 4"
#6	2'- 7"
#7	3'- 3"
#8	4'- 2"
#9	5'- 4"

A COPY OF THE ORIGINAL SEALED AND SIGNED DRAWING AND DESIGN STATEMENT IS ON FILE IN THE CENTRAL OFFICE.

SPECIFICATION REFERENCE

WING DETAIL

1½: 1 FILL SLOPE - TYPE I

VIRGINIA DEPARTMENT OF TRANSPORTATION

VDOT
ROAD AND BRIDGE STANDARDS

REVISION DATE 07/16

SHEET 2 OF 8

1006.02

BCW-11

WING	WALL DIMENSIONS								No. WEEP HOLES	FOOTING BAR SPACINGS													
	J	K1	K2	L1	L2	M	N1	N2		WF1		WF2		WF3		WF4, WF8 to WF10		WF5		WF6		WF7	
										LL	MM	AA	BB	CC	DD	NN	OO	EE	FF	GG	HH	JJ	KK
A	1'-6"	4'-0"	1'-9"	1'-0"	1'-0"	5'-0"	4'-0"	3'-0"	-	3	2'-6"	-	-	4	4'-0"	1	0'-8"	-	-	4	4'-0"	-	-
B	1'-6"	4'-6"	1'-9"	1'-0"	1'-0"	6'-0"	4'-0"	3'-0"	-	3	2'-6"	-	-	5	5'-0"	1	0'-8"	-	-	5	5'-0"	-	-
C	1'-6"	5'-0"	1'-9"	1'-0"	1'-0"	7'-0"	4'-0"	3'-0"	-	3	2'-6"	-	-	6	6'-0"	1	0'-8"	-	-	6	6'-0"	-	-
D	1'-6"	5'-6"	2'-3"	1'-0"	1'-0"	7'-0"	4'-3"	3'-0"	-	3	2'-6"	-	-	6	6'-0"	1	0'-8"	-	-	6	6'-0"	-	-
E	1'-6"	6'-0"	2'-3"	1'-0"	1'-0"	8'-0"	4'-6"	3'-0"	-	3	2'-6"	-	-	7	7'-0"	1	0'-8"	-	-	7	7'-0"	-	-
F	1'-6"	6'-6"	2'-3"	1'-0"	1'-0"	9'-0"	4'-9"	3'-0"	-	3	2'-6"	-	-	8	8'-0"	1	0'-8"	-	-	8	8'-0"	-	-
G	1'-6"	7'-0"	2'-9"	1'-0"	1'-0"	9'-0"	5'-6"	3'-0"	-	3	2'-6"	1	1'-0"	4	4'-0"	1	0'-8"	6	4'-6"	8	8'-0"	-	-
H	1'-6"	7'-6"	2'-9"	1'-0"	1'-0"	10'-0"	5'-6"	3'-0"	-	3	2'-6"	1	1'-0"	5	5'-0"	1	0'-8"	6	4'-6"	9	9'-0"	-	-
I	1'-6"	8'-0"	3'-0"	1'-0"	1'-0"	11'-0"	6'-0"	3'-0"	-	3	2'-6"	1	1'-0"	5	5'-0"	1	0'-8"	6	4'-6"	10	10'-0"	-	-
J	1'-6"	8'-6"	3'-0"	1'-0"	1'-0"	12'-0"	6'-6"	3'-0"	-	3	2'-6"	2	2'-0"	6	6'-0"	1	0'-8"	6	4'-6"	11	11'-0"	-	-
K	1'-6"	9'-0"	3'-6"	1'-0"	1'-0"	13'-0"	7'-0"	3'-0"	-	3	2'-6"	2	2'-0"	7	7'-0"	1	0'-8"	6	4'-6"	12	12'-0"	-	-
L	1'-6"	9'-6"	3'-6"	1'-0"	1'-0"	13'-0"	7'-6"	3'-0"	-	3	2'-6"	3	3'-0"	7	7'-0"	1	0'-8"	6	4'-6"	12	12'-0"	-	-
M	1'-6"	10'-0"	3'-6"	1'-0"	1'-0"	14'-0"	7'-6"	3'-0"	-	3	2'-6"	3	3'-0"	6	6'-0"	1	0'-8"	8	6'-0"	13	13'-0"	-	-
N	1'-6"	10'-6"	4'-0"	1'-0"	1'-0"	14'-0"	8'-6"	3'-6"	-	3	2'-6"	4	4'-0"	4	4'-0"	1	0'-8"	5	3'-9"	13	13'-0"	8	4'-0"
O	1'-6"	11'-0"	4'-0"	1'-0"	1'-0"	15'-0"	8'-6"	3'-6"	-	3	2'-6"	4	4'-0"	4	4'-0"	1	0'-8"	5	3'-9"	14	14'-0"	8	4'-0"
P	1'-6"	11'-6"	4'-0"	1'-0"	1'-0"	16'-0"	9'-0"	3'-6"	-	3	2'-6"	4	4'-0"	5	5'-0"	1	0'-8"	7	5'-3"	15	15'-0"	10	5'-0"
Q	1'-6"	12'-0"	4'-6"	1'-0"	1'-0"	16'-0"	9'-6"	4'-0"	-	4	3'-4"	4	4'-0"	5	5'-0"	1	0'-8"	7	5'-3"	15	15'-0"	10	5'-0"
R	1'-6"	12'-6"	4'-6"	1'-0"	1'-0"	17'-0"	10'-0"	4'-0"	-	4	3'-4"	4	4'-0"	5	5'-0"	1	0'-8"	7	5'-3"	16	16'-0"	10	5'-0"
S	1'-6"	13'-0"	4'-6"	1'-0"	1'-0"	18'-0"	10'-0"	4'-0"	-	4	3'-4"	4	4'-0"	5	5'-0"	1	0'-8"	7	5'-3"	17	17'-0"	10	5'-0"
T	2'-0"	13'-6"	4'-9"	1'-0"	1'-0"	19'-0"	11'-6"	4'-6"	-	4	3'-4"	6	6'-0"	6	6'-0"	1	1'-2"	8	6'-0"	18	18'-0"	12	6'-0"
U	2'-0"	14'-0"	5'-3"	1'-0"	1'-0"	19'-0"	12'-0"	4'-6"	-	4	3'-4"	6	6'-0"	6	6'-0"	1	1'-2"	8	6'-0"	18	18'-0"	12	6'-0"
V	2'-0"	14'-6"	5'-3"	1'-0"	1'-0"	20'-0"	12'-6"	4'-6"	1	4	3'-4"	7	7'-0"	6	6'-0"	1	1'-2"	8	6'-0"	19	19'-0"	12	6'-0"
W	2'-0"	15'-0"	5'-3"	1'-0"	1'-0"	21'-0"	13'-6"	4'-6"	1	4	3'-4"	8	8'-0"	6	6'-0"	1	1'-2"	8	6'-0"	20	20'-0"	12	6'-0"
X	2'-0"	15'-6"	5'-9"	1'-3¾"	1'-1⅛"	21'-0"	15'-0"	5'-0"	1	5	4'-2"	8	8'-0"	6	6'-0"	1	1'-2"	8	6'-0"	20	20'-0"	12	6'-0"
Y	2'-0"	16'-0"	5'-9"	1'-4"	1'-1⅛"	22'-0"	15'-0"	5'-0"	1	5	4'-2"	8	8'-0"	7	7'-0"	2	0'-7"	10	7'-6"	21	21'-0"	14	7'-0"
Z	2'-0"	16'-6"	5'-9"	1'-4⅛"	1'-1¼"	23'-0"	15'-6"	5'-0"	1	5	4'-2"	9	9'-0"	7	7'-0"	2	0'-7"	10	7'-6"	22	22'-0"	14	7'-0"
AA	2'-0"	17'-0"	5'-9"	1'-4¼"	1'-1¼"	24'-0"	15'-6"	5'-0"	1	5	4'-2"	9	9'-0"	7	7'-0"	2	0'-7"	10	7'-6"	23	23'-0"	14	7'-0"
BB	2'-0"	17'-6"	6'-3"	1'-4⅜"	1'-1¼"	24'-0"	16'-0"	5'-6"	1	6	5'-0"	9	9'-0"	7	7'-0"	2	0'-7"	10	7'-6"	23	23'-0"	14	7'-0"
CC	2'-0"	18'-0"	6'-3"	1'-4½"	1'-1¼"	25'-0"	16'-0"	5'-6"	2	6	5'-0"	9	9'-0"	8	8'-0"	2	0'-7"	11	8'-3"	24	24'-0"	16	8'-0"
DD	2'-6"	18'-6"	6'-3"	1'-4⅝"	1'-1⅜"	26'-0"	16'-6"	6'-0"	2	6	5'-0"	9	9'-0"	8	8'-0"	2	0'-10"	11	8'-3"	25	25'-0"	16	8'-0"
EE	2'-6"	19'-0"	6'-9"	1'-4¾"	1'-1⅜"	26'-0"	17'-6"	6'-0"	2	6	5'-0"	10	10'-0"	8	8'-0"	2	0'-10"	11	8'-3"	25	25'-0"	16	8'-0"

A COPY OF THE ORIGINAL SEALED AND SIGNED DRAWING IS ON FILE IN THE CENTRAL OFFICE

VDOT
ROAD AND BRIDGE STANDARDS

SHEET 3 OF 8 | REVISION DATE
1006.03 | 07/12

WING DETAILS

1½: 1 FILL SLOPE - TYPE I

VIRGINIA DEPARTMENT OF TRANSPORTATION

SPECIFICATION REFERENCE

BCW-11

WING	WF1				WF2								WF3						
	SIZE	a	LENGTH	* Ea	SIZE	a			LENGTH			* Ea	SIZE	a			LENGTH		
						FROM	TO	VARY BY	FROM	TO	VARY BY			FROM	TO	VARY BY	FROM	TO	VARY BY
A	4	4'-5"	5'-9"	2	4	0'-8"	5'-8"	-	2'-0"	7'-0"	-	2	4	3'-4"	2'-7"	0'-2 3/8"	4'-9"	3'-11"	0'-2 3/8"
B	4	5'-5"	6'-9"	2	4	0'-11"	6'-11"	-	2'-3"	8'-3"	-	2	4	3'-5"	2'-7"	0'-2"	4'-9"	3'-11"	0'-2"
C	4	6'-5"	7'-9"	2	4	1'-2"	8'-2"	-	2'-6"	9'-6"	-	2	4	3'-5"	2'-6"	0'-1 5/8"	4'-9"	3'-11"	0'-1 5/8"
D	4	6'-5"	7'-9"	2	4	2'-2"	7'-9"	-	3'-7"	9'-2"	-	2	4	3'-7"	2'-7"	0'-2 1/8"	5'-0"	3'-11"	0'-2 1/8"
E	4	7'-5"	8'-9"	2	4	3'-5"	3'-5"	-	4'-9"	4'-9"	-	2	4	3'-10"	2'-7"	0'-2 1/4"	5'-3"	3'-11"	0'-2 1/4"
F	4	8'-5"	9'-9"	2	4	4'-6"	4'-6"	-	5'-11"	5'-11"	-	2	4	4'-1"	2'-7"	0'-2 1/4"	5'-6"	3'-11"	0'-2 1/4"
G	4	8'-5"	9'-9"	2	4	5'-8"	2'-1"	3'-7 1/8"	7'-1"	3'-5"	3'-7 1/8"	2	4	3'-4"	2'-3"	0'-3 1/4"	4'-8"	3'-7"	0'-3 1/4"
H	4	9'-5"	10'-9"	2	4	6'-5"	2'-5"	4'-0"	7'-9"	3'-9"	4'-0"	2	4	3'-6"	2'-3"	0'-3"	4'-10"	3'-7"	0'-3"
I	4	10'-5"	11'-9"	2	4	7'-8"	4'-0"	3'-8"	9'-0"	5'-4"	3'-8"	2	4	3'-10"	2'-6"	0'-3 1/4"	5'-3"	3'-10"	0'-3 1/4"
J	4	11'-5"	12'-9"	2	4	8'-10"	1'-11"	3'-5 1/8"	10'-2"	3'-4"	3'-5 1/8"	2	4	4'-3"	2'-6"	0'-3 1/2"	5'-7"	3'-10"	0'-3 1/2"
K	4	12'-5"	13'-9"	2	4	9'-11"	3'-5"	3'-3"	11'-4"	4'-10"	3'-3"	2	4	4'-8"	2'-6"	0'-3 5/8"	6'-0"	3'-10"	0'-3 5/8"
L	4	12'-5"	13'-9"	2	4	10'-3"	1'-7"	2'-10 5/8"	11'-7"	2'-11"	2'-10 5/8"	2	4	4'-11"	2'-6"	0'-4 1/8"	6'-4"	3'-11"	0'-4 1/8"
M	4	13'-5"	14'-9"	2	4	11'-1"	1'-9"	3'-1 1/4"	12'-5"	3'-1"	3'-1 1/4"	2	4	4'-7"	2'-8"	0'-3 3/4"	6'-0"	4'-0"	0'-3 3/4"
N	4	13'-5"	14'-9"	2	4	12'-8"	1'-6"	2'-9 1/2"	14'-1"	2'-10"	2'-9 1/2"	2	4	4'-5"	3'-0"	0'-4 1/4"	5'-10"	4'-5"	0'-4 1/4"
O	4	14'-5"	15'-9"	2	4	13'-8"	1'-8"	3'-0"	15'-0"	3'-0"	3'-0"	2	4	4'-8"	3'-4"	0'-4"	6'-1"	4'-9"	0'-4"
P	4	15'-5"	16'-9"	2	4	14'-8"	3'-0"	2'-10 3/4"	16'-0"	4'-4"	2'-10 3/4"	2	4	4'-3"	2'-6"	0'-4 1/8"	5'-7"	3'-10"	0'-4 1/8"
Q	4	15'-5"	16'-9"	2	4	13'-8"	2'-1"	2'-10 3/4"	15'-1"	3'-4"	2'-10 3/4"	2	4	4'-8"	3'-0"	0'-4 1/8"	6'-1"	4'-3"	0'-4 1/8"
R	4	16'-5"	17'-9"	2	4	14'-9"	3'-5"	2'-10"	16'-1"	4'-9"	2'-10"	2	4	5'-1"	3'-4"	0'-4 1/8"	6'-6"	4'-8"	0'-4 1/8"
S	4	17'-5"	18'-9"	2	4	15'-8"	3'-8"	3'-0"	17'-0"	5'-0"	3'-0"	2	4	5'-4"	3'-8"	0'-4"	6'-9"	5'-1"	0'-4"
T	4	18'-5"	20'-9"	2	4	18'-2"	1'-10"	2'-8 1/2"	20'-6"	4'-3"	2'-8 1/2"	2	4	5'-9"	3'-7"	0'-4 3/8"	8'-2"	5'-11"	0'-4 3/8"
U	4	18'-5"	20'-9"	2	4	18'-2"	3'-0"	2'-6 3/8"	20'-6"	5'-3"	2'-6 3/8"	2	4	5'-11"	3'-6"	0'-4 5/8"	8'-3"	5'-11"	0'-4 5/8"
V	4	19'-5"	21'-9"	2	4	19'-2"	1'-8"	2'-6"	21'-7"	4'-1"	2'-6"	2	4	6'-4"	3'-11"	0'-4 3/4"	8'-8"	6'-4"	0'-4 3/4"
W	4	20'-5"	22'-9"	2	4	20'-2"	1'-6"	2'-4"	22'-7"	3'-11"	2'-4"	2	4	6'-11"	4'-4"	0'-5 1/8"	9'-4"	6'-9"	0'-5 1/8"
X	4	20'-5"	22'-9"	2	5	19'-6"	2'-8"	2'-1 1/8"	21'-10"	5'-0"	2'-1 1/8"	2	5	7'-9"	4'-11"	0'-5 5/8"	10'-1"	7'-3"	0'-5 5/8"
Y	4	21'-5"	23'-9"	2	5	20'-6"	2'-10"	2'-2 3/8"	22'-9"	5'-2"	2'-2 3/8"	2	5	6'-11"	3'-9"	0'-5 3/8"	9'-3"	6'-1"	0'-5 3/8"
Z	4	22'-5"	24'-9"	2	5	21'-6"	1'-9"	2'-2 1/4"	23'-9"	4'-1"	2'-2 1/4"	2	5	7'-5"	4'-2"	0'-5 3/8"	9'-8"	6'-6"	0'-5 3/8"
AA	4	23'-5"	25'-9"	2	5	22'-5"	1'-10"	2'-3 3/8"	24'-9"	4'-2"	2'-3 3/8"	2	5	7'-8"	4'-8"	0'-5 1/4"	10'-0"	7'-0"	0'-5 1/4"
BB	4	23'-5"	25'-9"	2	5	21'-8"	1'-1"	2'-3 3/8"	24'-0"	3'-5"	2'-3 3/8"	2	6	8'-2"	5'-2"	0'-5 1/4"	10'-6"	7'-5"	0'-5 1/4"
CC	4	24'-5"	26'-9"	2	5	22'-7"	1'-2"	2'-4 1/2"	24'-11"	3'-6"	2'-4 1/2"	2	6	7'-9"	4'-5"	0'-5"	10'-0"	6'-8"	0'-5"
DD	5	25'-5"	28'-8"	2	5	24'-9"	2'-6"	2'-5 5/8"	28'-1"	5'-10"	2'-5 5/8"	2	6	8'-7"	5'-4"	0'-4 3/4"	11'-10"	8'-7"	0'-4 3/4"
EE	5	25'-5"	28'-8"	2	5	24'-10"	2'-2"	2'-3 1/8"	28'-2"	5'-6"	2'-3 1/8"	2	6	8'-10"	5'-4"	0'-5 1/4"	12'-1"	8'-7"	0'-5 1/4"

A COPY OF THE ORIGINAL SEALED AND SIGNED DRAWING IS ON FILE IN THE CENTRAL OFFICE

SPECIFICATION REFERENCE

WING DETAILS

1 1/2 : 1 FILL SLOPE -TYPE I

VIRGINIA DEPARTMENT OF TRANSPORTATION

VDOT

ROAD AND BRIDGE STANDARDS

REVISION DATE 07/12

SHEET 4 OF 8

1006.04

BCW-11

WING	WF4		WF5							WF6						
	SIZE	LENGTH	SIZE	a			LENGTH			SIZE	a			LENGTH		
				FROM	TO	VARY BY	FROM	TO	VARY BY		FROM	TO	VARY BY	FROM	TO	VARY BY
A	4	4'-3"	-	-	-	-	-	-	-	4	3'-4"	2'-6"	0'-2⅜"	4'-8"	3'-11"	0'-2⅜"
B	4	5'-3"	-	-	-	-	-	-	-	4	3'-4"	2'-6"	0'-2"	4'-9"	3'-11"	0'-2"
C	4	6'-2"	-	-	-	-	-	-	-	4	3'-4"	2'-6"	0'-1⅝"	4'-9"	3'-10"	0'-1⅝"
D	4	6'-3"	-	-	-	-	-	-	-	4	3'-7"	2'-6"	0'-2⅛"	4'-11"	3'-11"	0'-2⅛"
E	4	7'-3"	-	-	-	-	-	-	-	4	3'-10"	2'-6"	0'-2¼"	5'-2"	3'-11"	0'-2¼"
F	4	8'-3"	-	-	-	-	-	-	-	4	4'-1"	2'-6"	0'-2¼"	5'-5"	3'-11"	0'-2¼"
G	4	8'-6"	4	4'-10"	3'-7"	0'-2⅜"	6'-3"	5'-0"	0'-2⅜"	4	4'-10"	2'-7"	0'-3¼"	6'-2"	4'-0"	0'-3¼"
H	4	9'-4"	4	4'-10"	3'-9"	0'-2¼"	6'-3"	5'-1"	0'-2¼"	4	4'-10"	2'-7"	0'-3"	6'-2"	3'-11"	0'-3"
I	4	10'-7"	4	5'-4"	4'-1"	0'-2⅜"	6'-9"	5'-6"	0'-2⅜"	4	5'-4"	2'-7"	0'-3¼"	6'-8"	3'-11"	0'-3¼"
J	4	11'-8"	4	5'-10"	4'-6"	0'-2⅝"	7'-3"	5'-11"	0'-2⅝"	4	5'-10"	2'-7"	0'-3½"	7'-2"	4'-0"	0'-3½"
K	4	12'-9"	5	6'-4"	4'-11"	0'-2¾"	7'-8"	6'-3"	0'-2¾"	4	6'-4"	2'-7"	0'-3⅝"	7'-8"	4'-0"	0'-3⅝"
L	4	12'-11"	5	6'-10"	5'-3"	0'-3"	8'-2"	6'-7"	0'-3"	4	6'-9"	2'-8"	0'-4⅛"	8'-2"	4'-0"	0'-4⅛"
M	4	13'-10"	5	6'-10"	4'-11"	0'-2¾"	8'-2"	6'-3"	0'-2¾"	4	6'-10"	2'-7"	0'-3¾"	8'-2"	4'-0"	0'-3¾"
N	4	14'-0"	5	6'-2"	4'-10"	0'-3⅛"	7'-5"	6'-1"	0'-3⅛"	4	7'-9"	3'-2"	0'-4¼"	9'-2"	4'-6"	0'-4¼"
O	4	15'-0"	5	6'-3"	5'-0"	0'-3"	7'-7"	6'-4"	0'-3"	4	7'-10"	3'-1"	0'-4"	9'-2"	4'-6"	0'-4"
P	4	16'-1"	5	6'-4"	4'-7"	0'-3"	7'-8"	5'-10"	0'-3"	4	8'-3"	3'-2"	0'-4⅛"	9'-8"	4'-6"	0'-4⅛"
Q	4	16'-1"	5	6'-10"	5'-1"	0'-3"	8'-2"	6'-4"	0'-3"	4	8'-9"	3'-8"	0'-4⅛"	10'-2"	5'-0"	0'-4⅛"
R	4	17'-2"	5	7'-4"	5'-5"	0'-3⅛"	8'-7"	6'-9"	0'-3⅛"	4	9'-3"	3'-8"	0'-4⅛"	10'-8"	5'-0"	0'-4⅛"
S	4	18'-2"	5	7'-5"	5'-8"	0'-3"	8'-9"	7'-0"	0'-3"	4	9'-4"	3'-7"	0'-4"	10'-8"	5'-0"	0'-4"
T	4	19'-5"	5	8'-4"	6'-1"	0'-3¼"	10'-8"	8'-5"	0'-3¼"	4	10'-9"	4'-2"	0'-4⅜"	13'-2"	6'-6"	0'-4⅜"
U	4	19'-7"	5	8'-8"	6'-3"	0'-3½"	11'-0"	8'-7"	0'-3½"	4	11'-3"	4'-2"	0'-4⅝"	13'-8"	6'-7"	0'-4⅝"
V	4	20'-8"	6	9'-1"	6'-9"	0'-3½"	11'-5"	9'-0"	0'-3½"	4	11'-9"	4'-2"	0'-4¾"	14'-2"	6'-7"	0'-4¾"
W	4	22'-0"	6	9'-11"	7'-4"	0'-3¾"	12'-2"	9'-7"	0'-3¾"	4	12'-9"	4'-2"	0'-5⅛"	15'-2"	6'-7"	0'-5⅛"
X	4	22'-5"	6	11'-1"	8'-3"	0'-4¼"	13'-4"	10'-6"	0'-4¼"	5	14'-3"	4'-9"	0'-5⅝"	16'-7"	7'-1"	0'-5⅝"
Y	4	23'-4"	6	10'-9"	7'-4"	0'-4"	13'-1"	9'-8"	0'-4"	5	14'-3"	4'-9"	0'-5⅜"	16'-7"	7'-0"	0'-5⅜"
Z	4	24'-5"	7	11'-3"	7'-10"	0'-4"	13'-6"	10'-1"	0'-4"	5	14'-9"	4'-9"	0'-5⅜"	17'-1"	7'-0"	0'-5⅜"
AA	4	25'-4"	7	11'-5"	8'-2"	0'-3¾"	13'-8"	10'-4"	0'-3¾"	5	14'-9"	4'-9"	0'-5¼"	17'-1"	7'-0"	0'-5¼"
BB	4	25'-4"	7	11'-11"	8'-8"	0'-3¾"	14'-2"	10'-10"	0'-3¾"	5	15'-3"	5'-2"	0'-5¼"	17'-7"	7'-6"	0'-5¼"
CC	4	26'-3"	7	11'-8"	8'-2"	0'-3¾"	13'-10"	10'-5"	0'-3¾"	5	15'-3"	5'-2"	0'-5"	17'-7"	7'-6"	0'-5"
DD	5	27'-2"	7	12'-3"	8'-11"	0'-3⅝"	15'-6"	12'-2"	0'-3⅝"	5	15'-9"	5'-8"	0'-4¾"	19'-1"	9'-0"	0'-4¾"
EE	5	27'-7"	7	12'-11"	9'-3"	0'-3¾"	16'-2"	12'-6"	0'-3¾"	5	16'-9"	5'-8"	0'-5¼"	20'-1"	9'-0"	0'-5¼"

A COPY OF THE ORIGINAL SEALED AND SIGNED DRAWING IS ON FILE IN THE CENTRAL OFFICE

VDOT
ROAD AND BRIDGE STANDARDS

SHEET 5 OF 8 | REVISION DATE
1006.05 | 07/12

WING DETAILS

1½: 1 FILL SLOPE - TYPE I

VIRGINIA DEPARTMENT OF TRANSPORTATION

SPECIFICATION REFERENCE

BCW-11

WING	WF7							WF8		WF9		WF10		WF11			
	SIZE	a			LENGTH			SIZE	LENGTH	SIZE	LENGTH	SIZE	LENGTH	SIZE	a	LENGTH	• Ea
		FROM	TO	VARY BY	FROM	TO	VARY BY										
A	-	-	-	-	-	-	-	4	4'-2"	4	3'-2"	4	2'-2"	4	2'-2"	4'-2"	4
B	-	-	-	-	-	-	-	4	5'-2"	4	3'-2"	4	2'-2"	4	2'-2"	4'-2"	4
C	-	-	-	-	-	-	-	4	6'-2"	4	3'-2"	4	2'-2"	4	2'-2"	4'-2"	4
D	-	-	-	-	-	-	-	4	6'-2"	4	3'-5"	4	2'-2"	4	2'-2"	4'-2"	4
E	-	-	-	-	-	-	-	4	7'-2"	4	3'-8"	4	2'-2"	4	2'-2"	4'-2"	4
F	-	-	-	-	-	-	-	4	8'-2"	4	3'-11"	4	2'-2"	4	2'-2"	4'-2"	4
G	-	-	-	-	-	-	-	4	8'-2"	4	4'-8"	4	2'-2"	4	2'-2"	4'-2"	4
H	-	-	-	-	-	-	-	4	9'-2"	4	4'-8"	4	2'-2"	4	2'-2"	4'-2"	4
I	-	-	-	-	-	-	-	4	10'-2"	4	5'-2"	4	2'-2"	4	2'-2"	4'-2"	4
J	-	-	-	-	-	-	-	4	11'-2"	4	5'-8"	4	2'-2"	4	2'-2"	4'-2"	4
K	-	-	-	-	-	-	-	4	12'-2"	4	6'-2"	4	2'-2"	4	2'-2"	4'-2"	4
L	-	-	-	-	-	-	-	4	12'-2"	4	6'-8"	4	2'-2"	4	2'-2"	4'-2"	4
M	-	-	-	-	-	-	-	4	13'-2"	4	6'-8"	4	2'-2"	4	2'-2"	4'-2"	4
N	5	7'-10"	6'-5"	0'-2⅛"	9'-2"	7'-9"	0'-2⅛"	4	13'-2"	4	7'-8"	4	2'-8"	4	2'-2"	4'-2"	4
O	5	7'-10"	6'-6"	0'-2"	9'-2"	7'-10"	0'-2"	4	14'-2"	4	7'-8"	4	2'-8"	4	2'-2"	4'-2"	4
P	5	8'-4"	6'-7"	0'-2"	9'-8"	7'-11"	0'-2"	4	15'-2"	4	8'-2"	4	2'-8"	4	2'-2"	4'-2"	4
Q	6	8'-10"	7'-1"	0'-2"	10'-2"	8'-5"	0'-2"	4	15'-2"	4	8'-8"	4	3'-2"	4	2'-2"	4'-2"	4
R	6	9'-4"	7'-7"	0'-2"	10'-7"	8'-10"	0'-2"	4	16'-2"	4	9'-2"	4	3'-2"	4	2'-2"	4'-2"	4
S	6	9'-4"	7'-8"	0'-2"	10'-7"	8'-11"	0'-2"	4	17'-2"	4	9'-2"	4	3'-2"	4	2'-2"	4'-2"	4
T	6	10'-10"	8'-7"	0'-2⅛"	13'-1"	10'-11"	0'-2⅛"	4	18'-2"	4	10'-8"	4	3'-8"	4	2'-2"	4'-2"	4
U	6	11'-4"	8'-11"	0'-2⅜"	13'-7"	11'-3"	0'-2⅜"	4	18'-2"	4	11'-2"	4	3'-8"	4	2'-2"	4'-2"	4
V	7	11'-10"	9'-5"	0'-2⅜"	14'-0"	11'-8"	0'-2⅜"	4	19'-2"	4	11'-8"	4	3'-8"	4	2'-2"	4'-2"	4
W	7	12'-10"	10'-3"	0'-2½"	15'-0"	12'-5"	0'-2½"	4	20'-2"	4	12'-8"	4	3'-8"	4	2'-2"	4'-2"	4
X	7	14'-4"	11'-5"	0'-2¾"	16'-6"	13'-8"	0'-2¾"	4	20'-2"	4	14'-2"	4	4'-2"	4	2'-2"	4'-2"	4
Y	7	14'-4"	11'-1"	0'-2⅝"	16'-6"	13'-4"	0'-2⅝"	4	21'-2"	4	14'-2"	4	4'-2"	4	2'-2"	4'-2"	4
Z	7	14'-10"	11'-7"	0'-2⅝"	17'-0"	13'-10"	0'-2⅝"	4	22'-2"	4	14'-8"	4	4'-2"	4	2'-2"	4'-2"	4
AA	7	14'-10"	11'-9"	0'-2⅝"	17'-0"	14'-0"	0'-2⅝"	4	23'-2"	4	14'-8"	4	4'-2"	4	2'-2"	4'-2"	4
BB	8	15'-4"	12'-3"	0'-2⅝"	17'-6"	14'-5"	0'-2⅝"	4	23'-2"	4	15'-2"	4	4'-8"	4	2'-2"	4'-2"	4
CC	8	15'-4"	11'-11"	0'-2½"	17'-6"	14'-1"	0'-2½"	4	24'-2"	4	15'-2"	4	4'-8"	4	2'-2"	4'-2"	4
DD	8	15'-10"	12'-7"	0'-2⅜"	19'-0"	15'-9"	0'-2⅜"	5	25'-2"	5	15'-8"	5	5'-2"	5	2'-9"	5'-4"	4
EE	8	16'-10"	13'-3"	0'-2⅝"	20'-0"	16'-5"	0'-2⅝"	5	25'-2"	5	16'-8"	5	5'-2"	5	2'-9"	5'-4"	4

A COPY OF THE ORIGINAL SEALED AND SIGNED DRAWING IS ON FILE IN THE CENTRAL OFFICE

SPECIFICATION REFERENCE

WING DETAILS

1½: 1 FILL SLOPE - TYPE I

VIRGINIA DEPARTMENT OF TRANSPORTATION

VDOT

ROAD AND BRIDGE STANDARDS

REVISION DATE 07/12

SHEET 6 OF 8

1006.06

BCW-11

WING	STEM BAR SPACINGS												WV1							WV2			
	WV1		WV2		WV3		WV4		WH1		WH2		SIZE	a			LENGTH			SIZE	LENGTH		
	O	P	Q	R	S	T	U	V	W	X	Y	Z		FROM	TO	VARY BY	FROM	TO	VARY BY		FROM	TO	VARY BY
A	4	4'-0"	3	3'-9"	-	-	-	-	1	1'-3"	1	1'-3"	4	4'-11"	3'-1"	0'-5⅜"	6'-10"	5'-0"	0'-5⅜"	4	4'-11"	3'-2"	0'-6¾"
B	5	5'-0"	4	5'-0"	-	-	-	-	1	0'-6"	1	1'-3"	4	5'-5"	3'-1"	0'-5½"	7'-4"	5'-0"	0'-5½"	4	5'-5"	3'-1"	0'-6¾"
C	6	6'-0"	5	6'-3"	-	-	-	-	1	1'-0"	1	1'-3"	4	5'-11"	3'-1"	0'-5⅜"	7'-10"	5'-0"	0'-5⅜"	4	5'-11"	3'-0"	0'-7"
D	6	6'-0"	5	6'-3"	-	-	-	-	2	1'-6"	1	1'-3"	4	6'-5"	3'-7"	0'-5⅜"	8'-4"	5'-6"	0'-5⅜"	4	6'-5"	3'-6"	0'-7"
E	7	7'-0"	6	7'-6"	-	-	-	-	1	0'-9"	2	2'-6"	4	6'-11"	3'-7"	0'-5⅝"	8'-10"	5'-6"	0'-5⅝"	4	6'-11"	3'-4"	0'-7"
F	8	8'-0"	6	7'-6"	-	-	-	-	1	1'-3"	2	2'-6"	4	7'-5"	3'-7"	0'-5⅝"	9'-4"	5'-6"	0'-5⅝"	4	7'-5"	3'-10"	0'-7⅛"
G	4	4'-0"	6	7'-6"	6	4'-6"	-	-	2	1'-9"	2	2'-6"	4	5'-4"	3'-5"	0'-5⅝"	7'-2"	5'-3"	0'-5⅝"	4	7'-11"	4'-4"	0'-7⅛"
H	5	5'-0"	7	8'-9"	6	4'-6"	-	-	2	2'-3"	2	2'-6"	4	5'-9"	3'-5"	0'-5⅝"	7'-8"	5'-3"	0'-5⅝"	4	8'-5"	4'-3"	0'-7⅛"
I	5	5'-0"	8	10'-0"	6	4'-6"	-	-	2	1'-6"	3	3'-9"	4	6'-5"	4'-1"	0'-5⅜"	8'-4"	6'-0"	0'-5⅜"	4	8'-11"	4'-4"	0'-6¾"
J	6	6'-0"	9	11'-3"	6	4'-6"	-	-	2	2'-0"	3	3'-9"	4	6'-11"	4'-1"	0'-5½"	8'-9"	6'-0"	0'-5½"	4	9'-5"	4'-3"	0'-6¾"
K	7	7'-0"	10	12'-6"	6	4'-6"	-	-	2	2'-6"	3	3'-9"	4	7'-7"	4'-7"	0'-5"	9'-6"	6'-6"	0'-5"	4	9'-11"	4'-7"	0'-6⅜"
L	7	7'-0"	10	12'-6"	6	4'-6"	-	-	3	3'-0"	3	3'-9"	4	7'-10"	4'-7"	0'-5½"	9'-9"	6'-6"	0'-5½"	4	10'-5"	4'-7"	0'-6¾"
M	6	6'-0"	10	12'-6"	8	6'-0"	-	-	2	2'-3"	4	5'-0"	4	7'-8"	4'-10"	0'-5½"	9'-7"	6'-9"	0'-5½"	4	10'-11"	5'-1"	0'-7"
N	4	4'-0"	10	12'-6"	5	3'-9"	8	4'-0"	3	2'-9"	4	5'-0"	5	7'-0"	5'-1"	0'-5½"	8'-11"	7'-1"	0'-5½"	4	11'-5"	5'-7"	0'-7"
O	4	4'-0"	11	13'-9"	5	3'-9"	8	4'-0"	3	3'-3"	4	5'-0"	5	7'-6"	5'-7"	0'-5⅝"	9'-5"	7'-6"	0'-5⅝"	4	11'-11"	5'-6"	0'-7"
P	5	5'-0"	12	15'-0"	7	5'-3"	10	5'-0"	2	2'-6"	5	6'-3"	5	6'-9"	4'-5"	0'-5⅝"	8'-8"	6'-4"	0'-5⅝"	4	12'-5"	5'-4"	0'-7"
Q	5	5'-0"	12	15'-0"	7	5'-3"	10	5'-0"	3	3'-0"	5	6'-3"	5	7'-3"	4'-11"	0'-5⅝"	9'-2"	6'-10"	0'-5⅝"	4	12'-11"	5'-10"	0'-7"
R	5	5'-0"	13	16'-3"	7	5'-3"	10	5'-0"	3	3'-6"	5	6'-3"	4	7'-9"	5'-5"	0'-5⅝"	9'-8"	7'-3"	0'-5⅝"	4	13'-5"	5'-9"	0'-7"
S	5	5'-0"	14	17'-6"	7	5'-3"	10	5'-0"	4	4'-0"	5	6'-3"	5	8'-3"	5'-10"	0'-5⅝"	10'-2"	7'-10"	0'-5⅝"	4	13'-11"	5'-7"	0'-7"
T	6	6'-0"	14	17'-6"	8	6'-0"	12	6'-0"	3	3'-3"	6	7'-6"	5	8'-7"	5'-9"	0'-5½"	10'-6"	7'-9"	0'-5½"	4	14'-11"	6'-10"	0'-6¾"
U	6	6'-0"	14	17'-6"	8	6'-0"	12	6'-0"	3	3'-9"	6	7'-6"	5	9'-1"	6'-3"	0'-5½"	11'-0"	8'-3"	0'-5½"	4	15'-5"	7'-4"	0'-6¾"
V	6	6'-0"	15	18'-9"	8	6'-0"	12	6'-0"	4	4'-3"	6	7'-6"	5	9'-6"	6'-9"	0'-5½"	11'-6"	8'-8"	0'-5½"	4	15'-11"	7'-3"	0'-6¾"
W	6	6'-0"	16	20'-0"	8	6'-0"	12	6'-0"	4	4'-9"	6	7'-6"	5	10'-0"	7'-3"	0'-5½"	11'-11"	9'-2"	0'-5½"	4	16'-5"	7'-1"	0'-6¾"
X	6	6'-0"	16	20'-0"	8	6'-0"	12	6'-0"	5	5'-3"	6	7'-6"	5	10'-6"	7'-9"	0'-5½"	12'-5"	9'-8"	0'-5½"	4	16'-11"	7'-7"	0'-6¾"
Y	7	7'-0"	17	21'-3"	10	7'-6"	14	7'-0"	4	4'-6"	7	8'-9"	5	9'-10"	6'-7"	0'-5½"	11'-9"	8'-6"	0'-5½"	4	17'-5"	7'-6"	0'-7"
Z	7	7'-0"	18	22'-6"	10	7'-6"	14	7'-0"	4	5'-0"	7	8'-9"	6	10'-4"	7'-0"	0'-5⅝"	12'-4"	9'-1"	0'-5⅝"	4	17'-11"	7'-4"	0'-7"
AA	7	7'-0"	18	22'-6"	10	7'-6"	14	7'-0"	4	4'-3"	8	10'-0"	6	10'-9"	7'-6"	0'-5⅝"	12'-10"	9'-6"	0'-5⅝"	4	18'-5"	7'-10"	0'-7"
BB	7	7'-0"	18	22'-6"	10	7'-6"	21	10'-6"	4	4'-9"	8	10'-0"	7	9'-8"	6'-4"	0'-5⅝"	11'-9"	8'-5"	0'-5⅝"	4	18'-11"	8'-4"	0'-7"
CC	8	8'-0"	19	23'-9"	11	8'-3"	24	12'-0"	5	5'-3"	8	10'-0"	7	9'-1"	5'-3"	0'-5⅝"	11'-2"	7'-5"	0'-5⅝"	4	19'-5"	8'-3"	0'-7"
DD	8	8'-0"	20	25'-0"	11	8'-3"	24	12'-0"	5	5'-9"	8	10'-0"	7	10'-0"	6'-3"	0'-5⅝"	12'-2"	8'-4"	0'-5⅝"	4	20'-5"	8'-7"	0'-7"
EE	8	8'-0"	20	25'-0"	11	8'-3"	24	12'-0"	5	6'-3"	8	10'-0"	7	10'-6"	6'-9"	0'-5⅝"	12'-8"	8'-10"	0'-5⅝"	4	20'-11"	9'-1"	0'-7"

A COPY OF THE ORIGINAL SEALED AND SIGNED DRAWING IS ON FILE IN THE CENTRAL OFFICE

VDOT
ROAD AND BRIDGE STANDARDS

SHEET 7 OF 8 | REVISION DATE
1006.07 | 07/12

WING DETAILS

1½: 1 FILL SLOPE - TYPE I

VIRGINIA DEPARTMENT OF TRANSPORTATION

SPECIFICATION REFERENCE

BCW-11

WING	WV3							WV4							WH1			WH2					WH3	
	SIZE	a			LENGTH			SIZE	a			LENGTH			SIZE	LENGTH	* Ea	SIZE	LENGTH			* EA	SIZE	LENGTH
		FROM	TO	VARY BY	FROM	TO	VARY BY		FROM	TO	VARY BY	FROM	TO	VARY BY					FROM	TO	VARY BY			
A	-	-	-	-	-	-	-	-	-	-	-	-	-	_	4	4'-6"	2	4	2'-1"	-	-	2	4	5'-0"
B	-	-	-	-	-	-	-	-	-	-	-	-	-	_	4	5'-6"	2	4	4'-8"	2'-0"	2'-7½"	2	4	6'-1"
C	-	-	-	-	-	-	-	-	-	-	-	-	-	_	4	6'-6"	2	4	4'-7"	2'-0"	2'-6¾"	2	4	7'-3"
D	-	-	-	-	-	-	-	-	-	-	-	-	-	_	4	6'-6"	2	4	4'-7"	2'-0"	2'-6¾"	2	4	7'-3"
E	-	-	-	-	-	-	-	-	-	-	-	-	-	_	4	7'-6"	2	4	7'-2"	2'-0"	2'-7"	2	4	8'-4"
F	-	-	-	-	-	-	-	-	-	-	-	-	-	_	4	8'-6"	2	4	7'-2"	2'-0"	2'-7"	2	4	12'-5"
G	4	7'-11"	5'-9"	0'-4¼"	9'-10"	7'-8"	0'-4¼"	-	-	-	-	-	-	_	4	8'-6"	2	4	7'-2"	2'-0"	2'-7"	2	4	13'-5"
H	4	8'-5"	6'-3"	0'-4¼"	10'-4"	8'-2"	0'-4¼"	-	-	-	-	-	-	_	4	9'-6"	2	4	7'-2"	2'-0"	2'-7"	2	4	10'-7"
I	5	8'-11"	6'-10"	0'-4⅛"	10'-10"	8'-10"	0'-4⅛"	-	-	-	-	-	-	_	4	10'-6"	2	4	10'-2"	2'-1"	2'-8¼""	2	4	11'-7"
J	5	9'-5"	7'-4"	0'-4⅛"	11'-4"	9'-3"	0'-4⅛"	-	-	-	-	-	-	_	4	11'-6"	2	4	10'-1"	2'-1"	2'-8"	2	4	12'-8"
K	6	9'-11"	8'-0"	0'-3¾"	11'-11"	10'-0"	0'-3¾"	-	-	-	-	-	-	_	4	12'-6"	2	4	11'-0"	2'-3"	2'-10¾"	2	4	13'-7"
L	6	10'-5"	8'-4"	0'-4⅛"	12'-5"	10'-4"	0'-4⅛"	-	-	-	-	-	-	_	4	12'-6"	2	4	10'-0"	2'-0"	2'-7¾"	2	4	13'-10"
M	6	10'-11"	8'-1"	0'-4⅛"	12'-11"	10'-2"	0'-4⅛"	-	-	-	-	-	-	_	4	13'-6"	2	4	12'-8"	2'-0"	2'-7¾"	2	4	14'-11"
N	6	9'-3"	7'-5"	0'-4⅛"	11'-3"	9'-6"	0'-4⅛"	6	11'-5"	9'-7"	0'-2¾"	13'-5"	11'-7"	0'-2¾"	4	13'-6"	2	4	12'-8"	2'-0"	2'-7¾"	2	4	14'-11"
O	6	9'-8"	7'-11"	0'-4⅛"	11'-9"	10'-0"	0'-4⅛"	6	11'-11"	10'-0"	0'-2¾"	13'-11"	12'-1"	0'-2¾"	4	14'-6"	2	4	12'-7"	2'-0"	2'-7½"	2	4	16'-1"
P	6	9'-9"	7'-3"	0'-4⅛"	11'-9"	9'-3"	0'-4⅛"	6	12'-5"	10'-1"	0'-2¾"	14'-5"	12'-1"	0'-2¾"	4	15'-6"	2	4	15'-2"	2'-0"	2'-7½"	2	4	17'-2"
Q	6	10'-3"	7'-9"	0'-4⅛"	12'-3"	9'-9"	0'-4⅛"	6	12'-11"	10'-7"	0'-2¾"	14'-11"	12'-7"	0'-2¾"	4	15'-6"	2	4	15'-2"	2'-0"	2'-7½"	2	4	17'-2"
R	6	10'-8"	8'-3"	0'-4¼"	12'-9"	10'-3"	0'-4¼"	7	13'-5"	11'-1"	0'-2¾"	15'-6"	13'-2"	0'-2¾"	4	16'-6"	2	4	15'-1"	2'-0"	2'-7¼"	2	4	18'-3"
S	6	11'-2"	8'-8"	0'-4¼"	13'-3"	10'-9"	0'-4¼"	7	13'-11"	11'-7"	0'-2¾"	16'-0"	13'-8"	0'-2¾"	4	17'-6"	2	4	15'-1"	2'-0"	2'-7⅜"	2	4	19'-5"
T	6	11'-10"	9'-0"	0'-4⅛"	13'-10"	11'-1"	0'-4⅛"	7	14'-11"	12'-2"	0'-2¾"	17'-0"	14'-3"	0'-2¾"	4	18'-6"	2	4	18'-2"	2'-1"	2'-8"	2	4	20'-5"
U	7	12'-4"	9'-6"	0'-4⅛"	14'-5"	11'-8"	0'-4⅛"	8	15'-5"	12'-8"	0'-2¾"	17'-7"	14'-10"	0'-2¾"	4	18'-6"	2	4	18'-2"	2'-1"	2'-8"	2	4	20'-5"
V	7	12'-9"	10'-0"	0'-4⅛"	14'-11"	12'-1"	0'-4⅛"	8	15'-11"	13'-2"	0'-2¾"	18'-1"	15'-4"	0'-2¾"	4	19'-6"	2	4	18'-1"	2'-0"	2'-8"	2	4	21'-6"
W	7	13'-3"	10'-6"	0'-4⅛"	15'-5"	12'-7"	0'-4⅛"	9	16'-5"	13'-7"	0'-2¾"	18'-10"	16'-1"	0'-2¾"	4	20'-6"	2	4	18'-0"	2'-0"	2'-7¾"	2	4	22'-8"
X	7	13'-9"	11'-0"	0'-4⅛"	15'-11"	13'-1"	0'-4⅛"	8	16'-11"	14'-1"	0'-2¾"	19'-1"	16'-4"	0'-2¾"	4	20'-6"	2	4	18'-0"	2'-0"	2'-7¾"	2	4	22'-8"
Y	7	13'-10"	10'-3"	0'-4⅛"	15'-11"	12'-5"	0'-4⅛"	8	17'-5"	14'-2"	0'-2¾"	19'-7"	16'-4"	0'-2¾"	4	21'-6"	2	4	20'-8"	2'-0"	2'-7¾"	2	4	23'-9"
Z	7	14'-3"	10'-9"	0'-4⅛"	16'-5"	12'-11"	0'-4⅛"	8	17'-11"	14'-8"	0'-2¾"	20'-1"	16'-10"	0'-2¾"	4	22'-6"	2	4	20'-7"	2'-1"	2'-7¾"	2	4	24'-11"
AA	7	14'-9"	11'-3"	0'-4⅛"	16'-11"	13'-4"	0'-4⅛"	9	18'-5"	15'-2"	0'-2¾"	20'-10"	17'-7"	0'-2¾"	4	23'-6"	2	4	23'-2"	2'-1"	2'-7½"	2	4	26'-0"
BB	8	13'-8"	10'-1"	0'-4⅛"	15'-10"	12'-4"	0'-4⅛"	9	18'-11"	14'-0"	0'-2¾"	21'-4"	16'-5"	0'-2¾"	4	23'-6"	2	4	23'-2"	2'-1"	2'-7½"	2	4	26'-0"
CC	8	13'-5"	9'-6"	0'-4⅛"	15'-7"	11'-9"	0'-4⅛"	9	19'-5"	13'-9"	0'-2¾"	21'-10"	16'-3"	0'-2¾"	4	24'-6"	2	4	23'-1"	2'-0"	2'-7½"	2	4	27'-1"
DD	8	14'-5"	10'-6"	0'-4⅛"	16'-7"	12'-8"	0'-4⅛"	9	20'-5"	14'-9"	0'-2¾"	22'-10"	17'-2"	0'-2¾"	4	25'-6"	2	4	23'-1"	2'-0"	2'-7½"	2	4	28'-3"
EE	8	14'-11"	11'-0"	0'-4⅛"	17'-1"	13'-2"	0'-4⅛"	10	20'-11"	15'-3"	0'-2¾"	23'-4"	17'-8"	0'-2¾"	4	25'-6"	2	4	23'-1"	2'-0"	2'-7½"	2	4	28'-3"

A COPY OF THE ORIGINAL SEALED AND SIGNED DRAWING IS ON FILE IN THE CENTRAL OFFICE

SPECIFICATION REFERENCE

WING DETAILS

1½: 1 FILL SLOPE - TYPE I

VIRGINIA DEPARTMENT OF TRANSPORTATION

VDOT

ROAD AND BRIDGE STANDARDS

REVISION DATE 07/12

SHEET 8 OF 8

1006.08

BCW-12

GENERAL NOTES

Specifications:

AASHTO LRFD Bridge Design Specifications 5th Edition 2010; 2011 Interim Revisions; and VDOT Modifications

Limits of validity for Standard Wingwall design

The standard wingwall designs are based on the following assumptions:

there is no structural connection between the wall and the box culvert
traffic surcharge loading is neglected.

Backfill

Backfill shall comprise granular material with an internal friction angle Φ' of at least 34 °. Cohesive backfill shall not be permitted. Compaction of the backfill material within a distance of one-half the height of the wall shall be by hand compactors only.

Drainage

The Contractor shall provide the drainage system indicated on Sheet 1.

The cost for the drainage system (including porous backfill, 6" diameter non-rigid tubing and other items required) shall be incidental to the cost bid for Concrete.

Concrete

All concrete shall be Class A4.

Reinforcement

Deformed reinforcing bars shall conform to ASTM A615, Grade 60. All reinforcing bar dimensions on the detailed drawings are to centers of bars except where otherwise noted and are subject to fabrication and construction tolerances.

Dimensions on bar diagrams are out-to-out of bars. Bars are straight unless otherwise shown.

The concrete cover to the outermost reinforcement bars shall be as follows:

Wall footing (all faces) 3" minimum cover
Wall stem (all faces) 2½" minimum cover

At the Contractor's option WV Series bars may be spliced at top of the footing in order to facilitate construction. Splice lengths shall be in accordance with Table C on Sheet 1. No additional compensation shall be provided for the increase in reinforcing steel quantity due to the splices.

Miscellaneous

Weepholes shall be placed at the lowest point feasible for free drainage away from the wing.

Four Type I Wings are to be used for straight crossings and skews up to 20°. Two Type I and two Type II Wings are to be used for skews from 25° to 45°. For skews above 45°, special design wings are required. The wingwall to be used for each culvert is shown on the BC series sheets.

The designs shown are applicable for a 45° skew with the roadway and other conditions indicated. Any change in these conditions invalidates these designs.

Quantities shown are for one wing.

WING	Wall Quantities		qr_min ksf High End	qr_min ksf Low End
	Concrete CY	Reinforcement LB		
A	2.1	201	1.10	0.47
B	2.5	236	1.28	0.47
C	2.9	263	1.50	0.47
D	3.4	292	1.68	0.47
E	3.9	331	1.88	0.47
F	4.5	361	2.08	0.47
G	5.1	416	2.28	0.47
H	5.9	467	2.49	0.47
I	6.6	671	2.71	0.47
J	7.3	731	2.93	0.47
K	8.0	853	3.15	0.47
L	8.9	935	3.25	0.47
M	9.6	972	3.61	0.47
N	10.6	1064	3.70	0.47
O	11.8	1209	3.80	0.47
P	12.6	1304	4.17	0.47
Q	13.7	1463	4.26	0.47
R	14.9	1670	4.35	0.47
S	17.2	1800	4.64	0.51
T	19.9	2056	4.93	0.55
U	21.4	2504	5.04	0.55
V	23.0	2779	5.15	0.55
W	24.0	3342	5.49	0.55
X	26.9	3415	5.83	0.55
Y	28.7	3602	5.93	0.55
Z	30.6	3846	6.04	0.55
AA	32.5	4425	6.16	0.55
BB	34.5	5408	6.28	0.55
CC	36.3	5571	6.51	0.55
DD	38.7	6063	6.53	0.55
EE	42.1	7235	6.48	0.55

A COPY OF THE ORIGINAL SEALED AND SIGNED DRAWING IS ON FILE IN THE CENTRAL OFFICE

VDOT
ROAD AND BRIDGE STANDARDS

SHEET 1 OF 8 | REVISION DATE
1006.09 | 07/12

WING DETAIL

1½: 1 FILL SLOPE - TYPE II

VIRGINIA DEPARTMENT OF TRANSPORTATION

SPECIFICATION REFERENCE

BCW-12

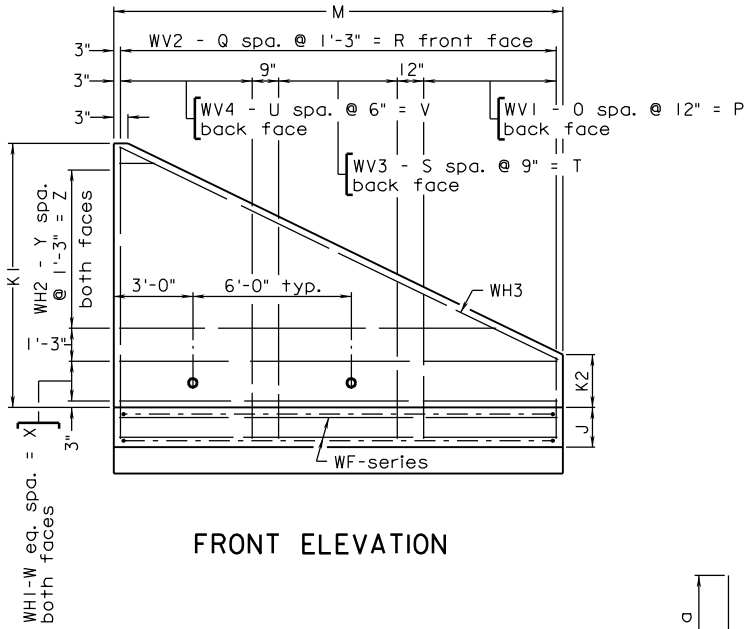

FRONT ELEVATION

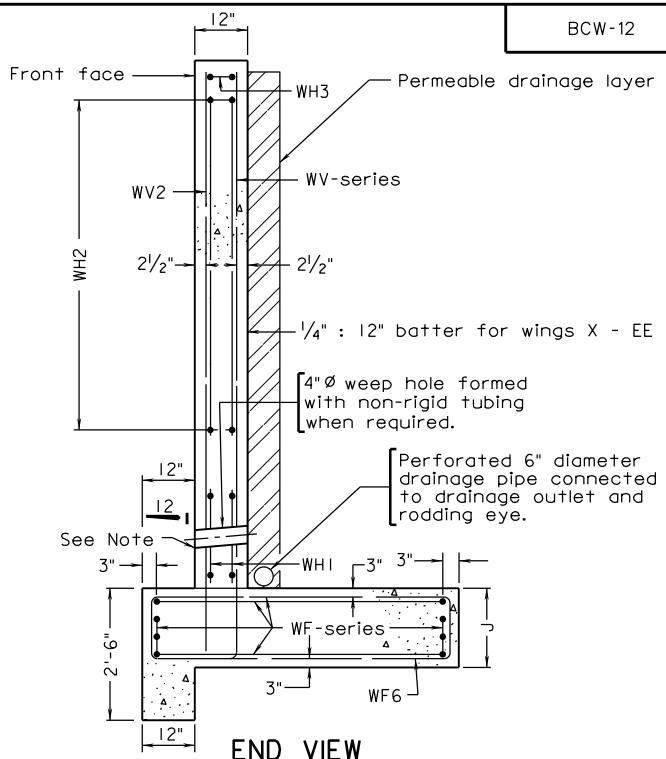

END VIEW

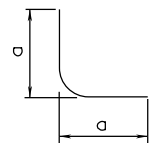

WF11

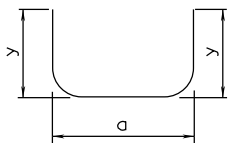

WF1 TO WF3, WF5 TO WF7

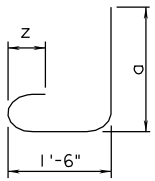

WV1, WV3, WV4

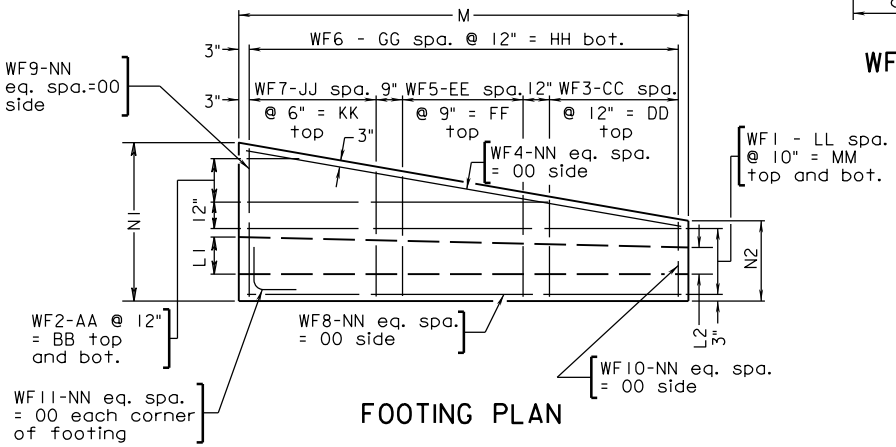

FOOTING PLAN

TABLE A	
Wall	y
A-W	9½"
X	1'-0½"
Y-CC	1'-3½"
DD-EE	1'-9½"

TABLE B		
Bar Size	Pin Dia.	Z
#3	2¼"	4"
#4	3"	4½"
#5	3¾"	5"
#6	4½"	6"
#7	5¼"	7"
#8	6"	8"
#9	9"	10⅛"

TABLE C	
Bar Size	Splice Length
#4	1'- 9"
#5	2'- 4"
#6	2'- 7"
#7	3'- 3"
#8	4'- 2"
#9	5'- 4"

A COPY OF THE ORIGINAL SEALED AND SIGNED DRAWING AND DESIGN STATEMENT IS ON FILE IN THE CENTRAL OFFICE.

SPECIFICATION REFERENCE

WING DETAIL

1½: 1 FILL SLOPE - TYPE II

VIRGINIA DEPARTMENT OF TRANSPORTATION

VDOT
ROAD AND BRIDGE STANDARDS

REVISION DATE 07/16

SHEET 2 OF 8

1006.10

BCW-12

WING	WALL DIMENSIONS								No. WEEP HOLES	FOOTING BAR SPACINGS													
	J	K1	K2	L1	L2	M	N1	N2		WF1		WF2		WF3		WF4, WF8 to WF10		WF5		WF6		WF7	
										LL	MM	AA	BB	CC	DD	NN	OO	EE	FF	GG	HH	JJ	KK
A	1'-6"	4'-0"	1'-0"	1'-0"	1'-0"	6'-6"	4'-0"	3'-0"	-	3	2'-6"	-	-	7	7'-0"	1	0'-8"	-	-	6	6'-0"	-	-
B	1'-6"	4'-6"	1'-0"	1'-0"	1'-0"	7'-6"	4'-0"	3'-0"	-	3	2'-6"	-	-	8	8'-0"	1	0'-8"	-	-	7	7'-0"	-	-
C	1'-6"	5'-0"	1'-0"	1'-0"	1'-0"	8'-6"	4'-0"	3'-0"	-	3	2'-6"	-	-	9	9'-0"	1	0'-8"	-	-	8	8'-0"	-	-
D	1'-6"	5'-6"	1'-0"	1'-0"	1'-0"	9'-6"	4'-3"	3'-0"	-	3	2'-6"	-	-	10	10'-0"	1	0'-8"	-	-	9	9'-0"	-	-
E	1'-6"	6'-0"	1'-0"	1'-0"	1'-0"	10'-6"	4'-6"	3'-0"	-	3	2'-6"	-	-	11	11'-0"	1	0'-8"	-	-	10	10'-0"	-	-
F	1'-6"	6'-6"	1'-0"	1'-0"	1'-0"	11'-6"	4'-9"	3'-0"	-	3	2'-6"	-	-	12	12'-0"	1	0'-8"	-	-	11	11'-0"	-	-
G	1'-6"	7'-0"	1'-0"	1'-0"	1'-0"	12'-6"	5'-0"	3'-0"	-	3	2'-6"	-	-	7	7'-0"	1	0'-8"	5	3'-9"	12	12'-0"	-	-
H	1'-6"	7'-6"	1'-0"	1'-0"	1'-0"	14'-0"	5'-3"	3'-0"	-	3	2'-6"	-	-	8	8'-0"	1	0'-8"	6	4'-6"	13	13'-0"	-	-
I	1'-6"	8'-0"	1'-0"	1'-0"	1'-0"	15'-0"	5'-6"	3'-0"	-	3	2'-6"	1	1'-0"	6	6'-0"	1	0'-8"	8	6'-0"	14	14'-0"	12	6'-0"
J	1'-6"	8'-6"	1'-0"	1'-0"	1'-0"	16'-0"	5'-9"	3'-0"	-	3	2'-6"	1	1'-0"	6	6'-0"	1	0'-8"	8	6'-0"	15	15'-0"	12	6'-0"
K	1'-6"	9'-0"	1'-0"	1'-0"	1'-0"	17'-0"	6'-0"	3'-0"	-	3	2'-6"	1	1'-0"	6	6'-0"	1	0'-8"	8	6'-0"	16	16'-0"	12	6'-0"
L	1'-6"	9'-6"	1'-0"	1'-0"	1'-0"	18'-0"	6'-6"	3'-0"	-	3	2'-6"	2	2'-0"	6	6'-0"	1	0'-8"	8	6'-0"	17	17'-0"	12	6'-0"
M	1'-6"	10'-0"	1'-0"	1'-0"	1'-0"	19'-0"	6'-6"	3'-0"	-	3	2'-6"	2	2'-0"	6	6'-0"	1	0'-8"	8	6'-0"	18	18'-0"	12	6'-0"
N	1'-6"	10'-6"	1'-0"	1'-0"	1'-0"	20'-0"	7'-0"	3'-0"	1	3	2'-6"	2	2'-0"	7	7'-0"	1	0'-8"	10	7'-6"	19	19'-0"	14	7'-0"
O	1'-6"	11'-0"	1'-0"	1'-0"	1'-0"	21'-6"	7'-6"	3'-0"	1	3	2'-6"	3	3'-0"	7	7'-0"	1	0'-8"	10	7'-6"	21	20'-0"	14	7'-0"
P	1'-6"	11'-6"	1'-0"	1'-0"	1'-0"	22'-6"	7'-6"	3'-0"	1	3	2'-6"	3	3'-0"	8	8'-0"	1	0'-8"	11	8'-3"	22	22'-0"	16	8'-0"
Q	1'-6"	12'-0"	1'-0"	1'-0"	1'-0"	23'-6"	8'-0"	3'-0"	1	3	2'-6"	3	3'-0"	8	8'-0"	1	0'-8"	11	8'-3"	23	23'-0"	16	8'-0"
R	1'-6"	12'-6"	1'-0"	1'-0"	1'-0"	24'-6"	8'-6"	3'-0"	1	3	2'-6"	4	4'-0"	8	8'-0"	1	0'-8"	11	8'-3"	24	24'-0"	16	8'-0"
S	1'-9"	13'-0"	1'-0"	1'-0"	1'-0"	25'-6"	9'-0"	3'-0"	2	3	2'-6"	4	4'-0"	8	8'-0"	1	0'-11"	11	8'-3"	25	25'-0"	16	8'-0"
T	2'-0"	13'-6"	1'-0"	1'-0"	1'-0"	26'-6"	9'-6"	3'-0"	2	3	2'-6"	5	5'-0"	9	9'-0"	1	1'-2"	12	9'-0"	26	26'-0"	18	9'-0"
U	2'-0"	14'-0"	1'-0"	1'-0"	1'-0"	27'-6"	10'-0"	3'-0"	2	3	2'-6"	5	5'-0"	9	9'-0"	1	1'-2"	12	9'-0"	27	27'-0"	18	9'-0"
V	2'-0"	14'-6"	1'-0"	1'-0"	1'-0"	28'-6"	10'-6"	3'-0"	2	3	2'-6"	6	6'-0"	10	10'-0"	1	1'-2"	14	10'-6"	28	28'-0"	20	10'-0"
W	2'-0"	15'-0"	1'-0"	1'-0"	1'-0"	29'-6"	10'-6"	3'-0"	2	3	2'-6"	6	6'-0"	10	10'-0"	1	1'-2"	14	10'-6"	29	29'-0"	20	10'-0"
X	2'-0"	15'-6"	1'-0"	1'-3 3/4"	1'-1 1/8"	31'-0"	11'-0"	3'-0"	3	3	2'-6"	6	6'-0"	11	11'-0"2	2	0'-7"	15	11'-3"	30	30'-0"	22	11'-0"
Y	2'-0"	16'-0"	1'-0"	1'-4"	1'-1 1/8"	32'-0"	11'-6"	3'-0"	3	3	2'-6"	7	7'-0"	11	11'-0"	2	0'-7"	15	11'-3"	31	31'-0"	22	11'-0"
Z	2'-0"	16'-6"	1'-0"	1'-4 1/8"	1'-1 1/4"	33'-0"	12'-0"	3'-0"	3	3	2'-6"	7	7'-0"	11	11'-0"	2	0'-7"	15	11'-3"	32	32'-0"	22	11'-0"
AA	2'-0"	17'-0"	1'-0"	1'-4 1/4"	1'-1 1/4"	34'-0"	12'-6"	3'-0"	3	3	2'-6"	8	8'-0"	11	11'-0"	2	0'-7"	15	11'-3"	33	33'-0"	22	11'-0"
BB	2'-0"	17'-6"	1'-0"	1'-4 3/8"	1'-1 1/4"	35'-0"	13'-0"	3'-0"	4	3	2'-6"	8	8'-0"	12	12'-0"	2	0'-7"	16	12'-0"	34	34'-0"	24	12'-0"
CC	2'-0"	18'-0"	1'-0"	1'-4 1/2"	1'-1 1/4"	36'-0"	13'-3"	3'-0"	4	3	2'-6"	8	8'-0"	12	12'-0"	2	0'-7"	16	12'-0"	35	35'-0"	24	12'-0"
DD	2'-0"	18'-6"	1'-0"	1'-4 5/8"	1'-1 3/8"	37'-0"	14'-0"	3'-0"	4	3	2'-6"	9	9'-0"	13	13'-0"	2	0'-7"	18	13'-6"	36	36'-0"	26	13'-0"
EE	2'-0"	19'-0"	1'-0"	1'-4 3/4"	1'-1 3/8"	38'-6"	15'-0"	3'-0"	4	3	2'-6"	10	10'-0"	13	13'-0"	2	0'-7"	18	13'-6"	38	38'-0"	26	13'-0"

A COPY OF THE ORIGINAL SEALED AND SIGNED DRAWING IS ON FILE IN THE CENTRAL OFFICE

VDOT
ROAD AND BRIDGE STANDARDS

SHEET 3 OF 8 | REVISION DATE
1006.11 | 07/12

WING DETAILS

1 1/2 : 1 FILL SLOPE - TYPE II

VIRGINIA DEPARTMENT OF TRANSPORTATION

SPECIFICATION REFERENCE

BCW-12

WING	WF1				WF2								WF3						
	SIZE	a	LENGTH	* Ea	SIZE	a			LENGTH			* Ea	SIZE	a			LENGTH		
						FROM	TO	VARY BY	FROM	TO	VARY BY			FROM	TO	VARY BY	FROM	TO	VARY BY
A	4	5'-11"	7'-3"	2	4	1'-0"	7'-6"	-	2'-5"	8'-11"	-	2	4	3'-5"	2'-4"	0'-1 7/8"	4'-9"	3'-8"	0'-1 7/8"
B	4	6'-11"	8'-3"	2	4	1'-3"	8'-9"	-	2'-8"	10'-2"	-	2	4	3'-5"	2'-4"	0'-1 1/2"	4'-9"	3'-8"	0'-1 1/2"
C	4	7'-11"	9'-3"	2	4	1'-6"	10'-0"	-	2'-11"	11'-5"	-	2	4	3'-5"	2'-4"	0'-1 3/8"	4'-9"	3'-8"	0'-1 3/8"
D	4	8'-11"	10'-3"	2	4	3'-2"	10'-9"	-	4'-7"	12'-2"	-	2	4	3'-8"	2'-4"	0'-1 1/2"	5'-0"	3'-8"	0'-1 1/2"
E	4	9'-11"	11'-3"	2	4	4'-8"	4'-8"	-	6'-0"	6'-0"	-	2	4	3'-11"	2'-4"	0'-1 5/8"	5'-3"	3'-8"	0'-1 5/8"
F	4	10'-11"	12'-3"	2	4	5'-11"	5'-11"	-	7'-4"	7'-4"	-	2	4	4'-2"	2'-4"	0'-1 7/8"	5'-6"	3'-8"	0'-1 7/8"
G	4	11'-11"	13'-3"	2	4	7'-2"	7'-2"	-	8'-7"	8'-7"	-	2	4	3'-7"	2'-6"	0'-1 7/8"	5'-0"	3'-10"	0'-1 7/8"
H	4	13'-5"	14'-9"	2	4	8'-9"	8'-9"	-	10'-1"	10'-1"	-	2	4	3'-9"	2'-5"	0'-1 7/8"	5'-1"	3'-10"	0'-1 7/8"
I	4	14'-5"	15'-9"	2	4	9'-11"	3'-11"	6'-0"	11'-3"	5'-3"	6'-0"	2	4	2'-7"	1'-7"	0'-2"	4'-0"	3'-0"	0'-2"
J	4	15'-5"	16'-9"	2	4	11'-0"	5'-2"	5'-9 3/4"	12'-5"	6'-7"	5'-9 3/4"	2	4	2'-9"	1'-8"	0'-2"	4'-2"	3'-1"	0'-2"
K	4	16'-5"	17'-9"	2	4	12'-2"	6'-6"	5'-8"	13'-6"	7'-10"	5'-8"	2	4	2'-11"	1'-11"	0'-2"	4'-4"	3'-3"	0'-2"
L	4	17'-5"	18'-9"	2	4	13'-6"	3'-3"	5'-1 5/8"	14'-11"	4'-7"	5'-1 5/8"	2	4	3'-2"	2'-0"	0'-2 1/4"	4'-7"	3'-5"	0'-2 1/4"
M	4	18'-5"	19'-9"	2	4	14'-4"	3'-5"	5'-5 1/8"	15'-8"	4'-10"	5'-5 1/8"	2	4	3'-4"	2'-3"	0'-2 1/8"	4'-9"	3'-7"	0'-2 1/8"
N	4	19'-5"	20'-9"	2	4	15'-8"	5'-8"	5'-0"	17'-0"	7'-0"	5'-0"	2	4	3'-1"	1'-9"	0'-2 3/8"	4'-6"	3'-1"	0'-2 3/8"
O	4	20'-11"	22'-3"	2	4	17'-4"	3'-0"	4'-9 1/4"	18'-8"	4'-4"	4'-9 1/4"	2	4	3'-6"	2'-0"	0'-2 1/2"	4'-10"	3'-4"	0'-2 1/2"
P	4	21'-11"	23'-3"	2	4	18'-2"	3'-2"	5'-0"	19'-6"	4'-6"	5'-0"	2	4	3'-3"	1'-8"	0'-2 3/8"	4'-8"	3'-1"	0'-2 3/8"
Q	4	22'-11"	24'-3"	2	4	19'-4"	5'-3"	4'-8 3/8"	20'-9"	6'-8"	4'-8 3/8"	2	4	3'-6"	1'-10"	0'-2 1/2"	4'-11"	3'-2"	0'-2 1/2"
R	4	23'-11"	25'-3"	2	4	20'-6"	2'-9"	4'-5 3/8"	21'-11"	4'-1"	4'-5 3/8"	2	4	3'-10"	2'-0"	0'-2 5/8"	5'-2"	3'-5"	0'-2 5/8"
S	4	24'-11"	26'-9"	2	4	21'-8"	4'-8"	4'-3"	23'-7"	6'-7"	4'-3"	2	4	4'-1"	2'-3"	0'-2 7/8"	6'-0"	4'-1"	0'-2 7/8"
T	4	25'-11"	28'-3"	2	4	22'-10"	2'-5"	4'-0 7/8"	25'-2"	4'-10"	4'-0 7/8"	2	4	4'-0"	1'-10"	0'-2 7/8"	6'-5"	4'-2"	0'-2 7/8"
U	4	26'-11"	29'-3"	2	4	23'-11"	4'-3"	3'-11 1/8"	26'-4"	6'-8"	3'-11 1/8"	2	4	4'-4"	2'-0"	0'-3"	6'-8"	4'-5"	0'-3"
V	4	27'-11"	30'-3"	2	4	25'-0"	2'-3"	3'-9 1/2"	27'-5"	4'-7"	3'-9 1/2"	2	4	4'-0"	1'-4"	0'-3 1/8"	6'-4"	3'-9"	0'-3 1/8"
W	4	28'-11"	31'-3"	2	5	25'-11"	2'-4"	3'-11 1/8"	28'-3"	4'-8"	3'-11 1/8"	2	4	4'-2"	1'-8"	0'-3"	6'-7"	4'-0"	0'-3"
X	4	30'-5"	32'-9"	2	5	27'-6"	4'-3"	3'-10 1/2"	29'-10"	6'-7"	3'-10 1/2"	2	4	4'-2"	1'-4"	0'-3"	6'-6"	3'-8"	0'-3"
Y	4	31'-5"	33'-9"	2	5	28'-7"	2'-2"	3'-9 1/8"	30'-10"	4'-6"	3'-9 1/8"	2	4	4'-6"	1'-7"	0'-3 1/8"	6'-10"	3'-11"	0'-3 1/8"
Z	4	32'-5"	34'-9"	2	5	29'-8"	4'-0"	3'-8"	31'-11"	6'-3"	3'-8"	2	4	4'-10"	1'-10"	0'-3 1/4"	7'-2"	4'-2"	0'-3 1/4"
AA	4	33'-5"	35'-9"	2	5	30'-8"	2'-1"	3'-6 7/8"	33'-0"	4'-5"	3'-6 7/8"	2	4	5'-2"	2'-1"	0'-3 1/4"	7'-6"	4'-5"	0'-3 1/4"
BB	4	34'-5"	36'-9"	2	5	31'-9"	3'-9"	3'-6"	34'-1"	6'-1"	3'-6"	2	4	5'-0"	1'-7"	0'-3 3/8"	7'-4"	3'-11"	0'-3 3/8"
CC	4	35'-5"	37'-9"	2	5	32'-9"	4'-8"	3'-6 1/8"	35'-1"	7'-0"	3'-6 1/8"	2	4	5'-3"	1'-10"	0'-3 3/8"	7'-8"	4'-3"	0'-3 3/8"
DD	4	36'-5"	38'-9"	2	5	33'-10"	3'-7"	3'-4 1/4"	36'-2"	5'-11"	3'-4 1/4"	2	4	4'-11"	1'-1"	0'-3 1/2"	7'-4"	3'-5"	0'-3 1/2"
EE	4	37'-11"	40'-3"	2	5	35'-6"	3'-5"	3'-2 3/8"	37'-10"	5'-9"	3'-2 3/8"	2	4	5'-6"	1'-6"	0'-3 5/8"	7'-11"	3'-10"	0'-3 5/8"

A COPY OF THE ORIGINAL SEALED AND SIGNED DRAWING IS ON FILE IN THE CENTRAL OFFICE

SPECIFICATION REFERENCE

WING DETAILS

1 1/2 : 1 FILL SLOPE - TYPE II

VIRGINIA DEPARTMENT OF TRANSPORTATION

VDOT

ROAD AND BRIDGE STANDARDS

REVISION DATE 07/12

SHEET 4 OF 8

1006.12

BCW-12

WING	WF4		WF5							WF6						
	SIZE	LENGTH	SIZE	a			LENGTH			SIZE	a			LENGTH		
				FROM	TO	VARY BY	FROM	TO	VARY BY		FROM	TO	VARY BY	FROM	TO	VARY BY
A	4	5'-8"	-	-	-	-	-	-	-	4	3'-4"	2'-5"	0'-1⅞"	4'-9"	3'-9"	0'-1⅞"
B	4	6'-8"	-	-	-	-	-	-	-	4	3'-4"	2'-5"	0'-1½"	4'-9"	3'-9"	0'-1½"
C	4	7'-8"	-	-	-	-	-	-	-	4	3'-4"	2'-5"	0'-1⅜"	4'-9"	3'-9"	0'-1⅜"
D	4	8'-9"	-	-	-	-	-	-	-	4	3'-7"	2'-5"	0'-1½"	5'-0"	3'-9"	0'-1½"
E	4	9'-9"	-	-	-	-	-	-	-	4	3'-10"	2'-5"	0'-1⅝"	5'-3"	3'-9"	0'-1⅝"
F	4	10'-9"	-	-	-	-	-	-	-	4	4'-1"	2'-5"	0'-1⅞"	5'-6"	3'-9"	0'-1⅞"
G	4	11'-9"	4	4'-4"	3'-9"	0'-1⅜"	5'-9"	5'-2"	0'-1⅜"	4	4'-4"	2'-5"	0'-1⅞"	5'-9"	3'-9"	0'-1⅞"
H	4	13'-4"	4	4'-8"	3'-11"	0'-1⅜"	6'-0"	5'-3"	0'-1⅜"	4	4'-7"	2'-6"	0'-1⅞"	6'-0"	3'-10"	0'-1⅞"
I	4	14'-4"	4	3'-9"	2'-9"	0'-1½"	5'-2"	4'-2"	0'-1½"	4	4'-10"	2'-6"	0'-2"	6'-3"	3'-11"	0'-2"
J	4	15'-4"	4	4'-0"	2'-11"	0'-1½"	5'-4"	4'-4"	0'-1½"	4	5'-1"	2'-6"	0'-2"	6'-5"	3'-11"	0'-2"
K	4	16'-5"	5	4'-2"	3'-1"	0'-1½"	5'-6"	4'-5"	0'-1½"	4	5'-4"	2'-6"	0'-2"	6'-8"	3'-11"	0'-2"
L	4	17'-6"	5	4'-7"	3'-5"	0'-1¾"	5'-11"	4'-9"	0'-1¾"	4	5'-10"	2'-6"	0'-2¼"	7'-2"	3'-11"	0'-2¼"
M	4	18'-5"	5	4'-8"	3'-6"	0'-1⅝"	5'-11"	4'-10"	0'-1⅝"	4	5'-10"	2'-6"	0'-2⅛"	7'-2"	3'-11"	0'-2⅛"
N	4	19'-6"	4	4'-10"	3'-4"	0'-1¾"	6'-2"	4'-8"	0'-1¾"	4	6'-4"	2'-6"	0'-2⅜"	7'-8"	3'-11"	0'-2⅜"
O	4	21'-1"	4	5'-3"	3'-8"	0'-1⅞"	6'-7"	5'-1"	0'-1⅞"	4	6'-10"	2'-5"	0'-2½"	8'-2"	3'-10"	0'-2½"
P	4	22'-1"	4	5'-1"	3'-6"	0'-1¾"	6'-6"	4'-10"	0'-1¾"	4	6'-10"	2'-5"	0'-2⅜"	8'-2"	3'-10"	0'-2⅜"
Q	4	23'-2"	4	5'-6"	3'-9"	0'-1⅞"	6'-11"	5'-1"	0'-1⅞"	4	7'-4"	2'-5"	0'-2½"	8'-8"	3'-10"	0'-2½"
R	4	24'-3"	4	5'-11"	4'-1"	0'-2"	7'-4"	5'-5"	0'-2"	4	7'-10"	2'-5"	0'-2⅝"	9'-2"	3'-10"	0'-2⅝"
S	4	25'-4"	4	6'-4"	4'-4"	0'-2"	8'-2"	6'-3"	0'-2"	4	8'-4"	2'-5"	0'-2⅞"	10'-2"	4'-4"	0'-2⅞"
T	4	26'-5"	4	6'-6"	4'-3"	0'-2⅛"	8'-10"	6'-8"	0'-2⅛"	4	8'-10"	2'-5"	0'-2⅞"	11'-2"	4'-10"	0'-2⅞"
U	4	27'-6"	4	6'-10"	4'-7"	0'-2¼"	9'-3"	6'-11"	0'-2¼"	4	9'-4"	2'-5"	0'-3"	11'-8"	4'-10"	0'-3"
V	4	28'-7"	4	7'-0"	4'-3"	0'-2¼"	9'-5"	6'-8"	0'-2¼"	4	9'-10"	2'-5"	0'-3⅛"	12'-2"	4'-10"	0'-3⅛"
W	4	29'-7"	5	7'-1"	4'-5"	0'-2¼"	9'-5"	6'-9"	0'-2¼"	5	9'-10"	2'-5"	0'-3"	12'-2"	4'-9"	0'-3"
X	4	31'-2"	5	7'-4"	4'-5"	0'-2¼"	9'-8"	6'-9"	0'-2¼"	5	10'-4"	2'-7"	0'-3"	12'-8"	4'-11"	0'-3"
Y	4	32'-3"	5	7'-9"	4'-9"	0'-2⅜"	10'-1"	7'-1"	0'-2⅜"	5	10'-10"	2'-7"	0'-3⅛"	13'-2"	4'-11"	0'-3⅛"
Z	4	33'-4"	5	8'-2"	5'-1"	0'-2⅜"	10'-6"	7'-5"	0'-2⅜"	5	11'-4"	2'-7"	0'-3¼"	13'-8"	4'-11"	0'-3¼"
AA	4	34'-5"	6	8'-7"	5'-5"	0'-2½"	10'-10"	7'-8"	0'-2½"	5	11'-10"	2'-7"	0'-3¼"	14'-2"	4'-11"	0'-3¼"
BB	4	35'-7"	6	8'-8"	5'-3"	0'-2½"	11'-0"	7'-7"	0'-2½"	5	12'-4"	2'-7"	0'-3⅜"	14'-8"	4'-11"	0'-3⅜"
CC	4	36'-7"	6	9'-0"	5'-7"	0'-2½"	11'-3"	7'-10"	0'-2½"	5	12'-7"	2'-7"	0'-3⅜"	14'-11"	4'-11"	0'-3⅜"
DD	4	37'-9"	6	9'-3"	5'-3"	0'-2⅝"	11'-6"	7'-6"	0'-2⅝"	5	13'-4"	2'-7"	0'-3½"	15'-7"	4'-11"	0'-3½"
EE	4	39'-6"	6	10'-1"	5'-10"	0'-2¾"	12'-4"	8'-1"	0'-2¾"	5	14'-4"	2'-5"	0'-3⅝"	16'-7"	4'-9"	0'-3⅝"

A COPY OF THE ORIGINAL SEALED AND SIGNED DRAWING IS ON FILE IN THE CENTRAL OFFICE

VDOT
ROAD AND BRIDGE STANDARDS

SHEET 5 OF 8 | REVISION DATE
1006.13 | 07/12

WING DETAILS

1½: 1 FILL SLOPE - TYPE II

VIRGINIA DEPARTMENT OF TRANSPORTATION

SPECIFICATION REFERENCE

BCW-12

WING	WF7							WF8		WF9		WF10		WF11			
	SIZE	a			LENGTH			SIZE	LENGTH	SIZE	LENGTH	SIZE	LENGTH	SIZE	a	LENGTH	* Ea
		FROM	TO	VARY BY	FROM	TO	VARY BY										
A	-	-	-	-	-	-	-	4	5'-8"	4	3'-2"	4	2'-2"	4	2'-2"	4'-2"	4
B	-	-	-	-	-	-	-	4	6'-8"	4	3'-2"	4	2'-2"	4	2'-2"	4'-2"	4
C	-	-	-	-	-	-	-	4	7'-8"	4	3'-2"	4	2'-2"	4	2'-2"	4'-2"	4
D	-	-	-	-	-	-	-	4	8'-8"	4	3'-5"	4	2'-2"	4	2'-2"	4'-2"	4
E	-	-	-	-	-	-	-	4	9'-8"	4	3'-8"	4	2'-2"	4	2'-2"	4'-2"	4
F	-	-	-	-	-	-	-	4	10'-8"	4	3'-11"	4	2'-2"	4	2'-2"	4'-2"	4
G	-	-	-	-	-	-	-	4	11'-8"	4	4'-2"	4	2'-2"	4	2'-2"	4'-2"	4
H	-	-	-	-	-	-	-	4	13'-2"	4	4'-5"	4	2'-2"	4	2'-2"	4'-2"	4
I	5	4'-11"	3'-11"	0'-0 7/8"	6'-2"	5'-2"	0'-0 7/8"	4	14'-2"	4	4'-8"	4	2'-2"	4	2'-2"	4'-2"	4
J	5	5'-1"	4'-1"	0'-1"	6'-5"	5'-5"	0'-1"	4	15'-2"	4	4'-11"	4	2'-2"	4	2'-2"	4'-2"	4
K	5	5'-4"	4'-4"	0'-1"	6'-8"	5'-8"	0'-1"	4	16'-2"	4	5'-2"	4	2'-2"	4	2'-2"	4'-2"	4
L	5	5'-10"	4'-8"	0'-1 1/8"	7'-2"	6'-0"	0'-1 1/8"	4	17'-2"	4	5'-8"	4	2'-2"	4	2'-2"	4'-2"	4
M	5	5'-10"	4'-9"	0'-1"	7'-2"	6'-1"	0'-1"	4	18'-2"	4	5'-8"	4	2'-2"	4	2'-2"	4'-2"	4
N	5	6'-4"	5'-0"	0'-1 1/8"	7'-8"	6'-3"	0'-1 1/8"	4	19'-2"	4	6'-2"	4	2'-2"	4	2'-2"	4'-2"	4
O	5	6'-10"	5'-5"	0'-1 1/4"	8'-2"	6'-9"	0'-1 1/4"	4	20'-8"	4	6'-8"	4	2'-2"	4	2'-2"	4'-2"	4
P	5	6'-10"	5'-3"	0'-1 1/8"	8'-2"	6'-7"	0'-1 1/8"	4	21'-8"	4	6'-8"	4	2'-2"	4	2'-2"	4'-2"	4
Q	6	7'-4"	5'-8"	0'-1 1/4"	8'-8"	6'-11"	0'-1 1/4"	4	22'-8"	4	7'-2"	4	2'-2"	4	2'-2"	4'-2"	4
R	6	7'-10"	6'-1"	0'-1 1/4"	9'-2"	7'-4"	0'-1 1/4"	4	23'-8"	4	7'-8"	4	2'-2"	4	2'-2"	4'-2"	4
S	6	8'-4"	6'-6"	0'-1 3/8"	10'-2"	8'-3"	0'-1 3/8"	4	24'-8"	4	8'-2"	4	2'-2"	4	2'-2"	4'-2"	4
T	6	8'-10"	6'-7"	0'-1 3/8"	11'-2"	8'-11"	0'-1 3/8"	4	25'-8"	4	8'-8"	4	2'-2"	4	2'-2"	4'-2"	4
U	7	9'-4"	7'-1"	0'-1 1/2"	11'-7"	9'-3"	0'-1 1/2"	4	26'-8"	4	9'-2"	4	2'-2"	4	2'-2"	4'-2"	4
V	7	9'-10"	7'-3"	0'-1 1/2"	12'-1"	9'-5"	0'-1 1/2"	4	27'-8"	4	9'-8"	4	2'-2"	4	2'-2"	4'-2"	4
W	7	9'-10"	7'-4"	0'-1 1/2"	12'-1"	9'-6"	0'-1 1/2"	4	28'-8"	4	9'-8"	4	2'-2"	4	2'-2"	4'-2"	4
X	7	10'-4"	7'-6"	0'-1 1/2"	12'-7"	9'-9"	0'-1 1/2"	4	30'-2"	4	10'-2"	4	2'-2"	4	2'-2"	4'-2"	4
Y	7	10'-10"	7'-11"	0'-1 1/2"	13'-1"	10'-2"	0'-1 1/2"	4	31'-2"	4	10'-8"	4	2'-2"	4	2'-2"	4'-2"	4
Z	7	11'-4"	8'-4"	0'-1 5/8"	13'-7"	10'-7"	0'-1 5/8"	4	32'-2"	4	11'-2"	4	2'-2"	4	2'-2"	4'-2"	4
AA	7	11'-10"	8'-9"	0'-1 5/8"	14'-1"	11'-0"	0'-1 5/8"	4	33'-2"	4	11'-8"	4	2'-2"	4	2'-2"	4'-2"	4
BB	8	12'-4"	8'-11"	0'-1 5/8"	14'-6"	11'-1"	0'-1 5/8"	4	34'-2"	4	12'-2"	4	2'-2"	4	2'-2"	4'-2"	4
CC	8	12'-7"	9'-2"	0'-1 5/8"	14'-9"	11'-4"	0'-1 5/8"	4	35'-2"	4	12'-5"	4	2'-2"	4	2'-2"	4'-2"	4
DD	8	13'-4"	9'-6"	0'-1 3/4"	15'-6"	11'-8"	0'-1 3/4"	4	36'-2"	4	13'-2"	4	2'-2"	4	2'-2"	4'-2"	4
EE	9	14'-4"	10'-3"	0'-1 3/4"	16'-4"	12'-4"	0'-1 3/4"	4	37'-8"	4	14'-2"	4	2'-2"	4	2'-2"	4'-2"	4

A COPY OF THE ORIGINAL SEALED AND SIGNED DRAWING IS ON FILE IN THE CENTRAL OFFICE

SPECIFICATION REFERENCE

WING DETAILS

1 1/2 : 1 FILL SLOPE - TYPE II

VIRGINIA DEPARTMENT OF TRANSPORTATION

VDOT

ROAD AND BRIDGE STANDARDS

REVISION DATE 07/12

SHEET 6 OF 8

1006.14

BCW-12

WING	STEM BAR SPACINGS												WV1							WV2			
	WV1		WV2		WV3		WV4		WH1		WH2		SIZE	a			LENGTH			SIZE	LENGTH		
	O	P	Q	R	S	T	U	V	W	X	Y	Z		FROM	TO	VARY BY	FROM	TO	VARY BY		FROM	TO	VARY BY
A	7	7'-0"	4	5'-0"	-	-	-	-	-	-	1	1'-3"	4	4'-11"	1'-8"	0'-5½"	6'-10"	3'-7"	0'-5½"	4	4'-11"	2'-7"	0'-7"
B	8	8'-0"	5	6'-3"	-	-	-	-	1	0'-6"	1	1'-3"	4	5'-5"	1'-8"	0'-5⅝"	7'-4"	3'-7"	0'-5⅝"	4	5'-5"	2'-6"	0'-7"
C	9	9'-0"	6	7'-6"	-	-	-	-	-	-	2	2'-6"	4	5'-11"	1'-8"	0'-5⅝"	7'-10"	3'-7"	0'-5⅝"	4	5'-11"	2'-4"	0'-7⅛"
D	10	10'-0"	7	8'-9"	-	-	-	-	-	-	2	2'-6"	4	6'-5"	1'-8"	0'-5⅝"	8'-4"	3'-7"	0'-5⅝"	4	6'-5"	2'-3"	0'-7⅛"
E	11	11'-0"	8	10'-0"	-	-	-	-	-	-	3	3'-9"	4	6'-11"	1'-8"	0'-5¾"	8'-10"	3'-7"	0'-5¾"	4	6'-11"	2'-1"	0'-7⅛"
F	12	12'-0"	8	10'-0"	-	-	-	-	-	-	3	3'-9"	4	7'-5"	1'-8"	0'-5¾"	9'-4"	3'-7"	0'-5¾"	4	7'-5"	2'-7"	0'-7⅛"
G	7	7'-0"	9	11'-3"	5	3'-9"	-	-	1	0'-6"	3	3'-9"	4	5'-7"	2'-3"	0'-5¾"	7'-6"	4'-2"	0'-5¾"	4	7'-11"	2'-6"	0'-7⅛"
H	8	8'-0"	10	12'-6"	6	4'-6"	-	-	-	-	4	5'-0"	4	5'-9"	2'-1"	0'-5½"	7'-9"	4'-0"	0'-5½"	4	8'-5"	2'-7"	0'-7"
I	6	6'-0"	11	13'-9"	8	6'-0"	12	6'-0"	-	-	4	5'-0"	4	2'-6"	1'-8"	0'-5⅝"	4'-4"	3'-7"	0'-5⅝"	4	8'-11"	2'-6"	0'-7"
J	6	6'-0"	12	15'-0"	8	6'-0"	12	6'-0"	-	-	5	6'-3"	4	2'-11"	1'-8"	0'-5⅝"	4'-10"	3'-7"	0'-5⅝"	4	9'-5"	2'-4"	0'-7"
K	6	6'-0"	13	16'-3"	8	6'-0"	12	6'-0"	-	-	5	6'-3"	4	3'-5"	1'-8"	0'-5⅝"	5'-4"	3'-7"	0'-5⅝"	4	9'-11"	2'-3"	0'-7"
L	6	6'-0"	14	17'-6"	8	6'-0"	12	6'-0"	1	0'-6"	5	6'-3"	4	3'-11"	1'-8"	0'-5⅝"	5'-10"	3'-7"	0'-5⅝"	4	10'-5"	2'-2"	0'-7"
M	6	6'-0"	14	17'-6"	8	6'-0"	12	6'-0"	-	-	6	7'-6"	4	4'-5"	1'-8"	0'-5⅝"	6'-3"	3'-7"	0'-5⅝"	4	10'-11"	2'-7"	0'-7⅛"
N	7	7'-0"	15	18'-9"	10	7'-6"	14	7'-0"	-	-	6	7'-6"	4	3'-8"	1'-8"	0'-5⅝"	5'-7"	3'-7"	0'-5⅝"	4	11'-5"	2'-6"	0'-7⅛"
O	7	7'-0"	16	20'-0"	10	7'-6"	14	7'-0"	-	-	7	8'-9"	4	4'-4"	1'-8"	0'-5½"	6'-3"	3'-7"	0'-5½"	4	11'-11"	2'-7"	0'-7"
P	8	8'-0"	17	21'-3"	11	8'-3"	16	8'-0"	-	-	7	8'-9"	4	4'-0"	1'-8"	0'-5½"	5'-11"	3'-7"	0'-5½"	4	12'-5"	2'-6"	0'-7"
Q	8	8'-0"	18	22'-6"	11	8'-3"	16	8'-0"	1	0'-6"	7	8'-9"	4	4'-6"	1'-8"	0'-5⅝"	6'-4"	3'-7"	0'-5⅝"	4	12'-11"	2'-4"	0'-7"
R	8	8'-0"	19	23'-9"	11	8'-3"	16	8'-0"	-	-	8	10'-0"	4	4'-11"	1'-8"	0'-5⅝"	6'-10"	3'-7"	0'-5⅝"	4	13'-5"	2'-3"	0'-7"
S	8	8'-0"	20	25'-0"	11	8'-3"	16	8'-0"	-	-	8	10'-0"	4	5'-8"	1'-11"	0'-5⅝"	7'-7"	3'-10"	0'-5⅝"	4	14'-2"	2'-4"	0'-7"
T	9	9'-0"	20	25'-0"	12	9'-0"	18	9'-0"	-	-	9	11'-3"	4	5'-7"	1'-8"	0'-5⅝"	7'-6"	3'-7"	0'-5⅝"	4	14'-11"	3'-1"	0'-7"
U	9	9'-0"	21	26'-3"	12	9'-0"	18	9'-0"	-	-	9	11'-3"	4	6'-1"	1'-9"	0'-5⅝"	7'-11"	3'-8"	0'-5⅝"	4	15'-5"	3'-0"	0'-7"
V	10	10'-0"	22	27'-6"	14	10'-6"	20	10'-0"	1	0'-6"	9	11'-3"	4	5'-4"	1'-8"	0'-5⅝"	7'-3"	3'-7"	0'-5⅝"	4	15'-11"	2'-10"	0'-7⅛"
W	10	10'-0"	23	28'-9"	14	10'-6"	20	10'-0"	-	-	10	12'-6"	4	5'-10"	1'-8"	0'-5⅝"	7'-9"	3'-7"	0'-5⅝"	4	16'-5"	2'-9"	0'-7⅛"
X	11	11'-0"	24	30'-0"	15	11'-3"	22	11'-0"	-	-	10	12'-6"	4	5'-8"	1'-8"	0'-5⅝"	7'-7"	3'-7"	0'-5⅝"	4	16'-11"	2'-10"	0'-7"
Y	11	11'-0"	25	31'-3"	15	11'-3"	22	11'-0"	-	-	11	13'-9"	4	6'-2"	1'-8"	0'-5⅝"	8'-0"	3'-7"	0'-5⅝"	4	17'-5"	2'-9"	0'-7"
Z	11	11'-0"	26	32'-6"	15	11'-3"	22	11'-0"	-	-	11	13'-9"	4	6'-7"	1'-8"	0'-5⅝"	8'-6"	3'-7"	0'-5⅝"	4	17'-11"	2'-7"	0'-7"
AA	11	11'-0"	26	32'-6"	15	11'-3"	22	11'-0"	1	0'-6"	11	13'-9"	4	7'-1"	1'-11"	0'-5⅝"	9'-0"	3'-10"	0'-5⅝"	4	18'-5"	3'-1"	0'-7"
BB	12	12'-0"	27	33'-9"	16	12'-0"	36	18'-0"	-	-	12	15'-0"	4	3'-11"	1'-8"	0'-5⅝"	5'-10"	3'-7"	0'-5⅝"	4	18'-11"	3'-0"	0'-7"
CC	12	12'-0"	28	35'-0"	16	12'-0"	36	18'-0"	-	-	12	15'-0"	4	4'-5"	1'-8"	0'-5⅝"	6'-3"	3'-7"	0'-5⅝"	4	19'-5"	2'-10"	0'-7"
DD	13	13'-0"	29	36'-3"	18	13'-6"	39	19'-6"	-	-	13	16'-3"	4	3'-5"	1'-8"	0'-5⅝"	5'-4"	3'-7"	0'-5⅝"	4	19'-11"	2'-9"	0'-7"
EE	13	13'-0"	30	37'-6"	18	13'-6"	39	19'-6"	-	-	13	16'-3"	4	4'-2"	1'-8"	0'-5⅝"	6'-0"	3'-7"	0'-5⅝"	4	20'-5"	2'-10"	0'-7"

A COPY OF THE ORIGINAL SEALED AND SIGNED DRAWING IS ON FILE IN THE CENTRAL OFFICE

VDOT
ROAD AND BRIDGE STANDARDS

SHEET 7 OF 8 | REVISION DATE
1006.15 | 07/12

WING DETAILS

1½: 1 FILL SLOPE - TYPE II

VIRGINIA DEPARTMENT OF TRANSPORTATION

SPECIFICATION REFERENCE

BCW-12

WING	WV3							WV4							WH1			WH2					WH3	
	SIZE	a			LENGTH			SIZE	a			LENGTH			SIZE	LENGTH	• Ea	SIZE	LENGTH			• EA	SIZE	LENGTH
		FROM	TO	VARY BY	FROM	TO	VARY BY		FROM	TO	VARY BY	FROM	TO	VARY BY					FROM	TO	VARY BY			
A	-	-	-	-	-	-	-	-	-	-	-	-	-	_	4	6'-0"	2	4	4'-8"	2'-0"	2'-7½"	2	4	6'-8"
B	-	-	-	-	-	-	-	-	-	-	-	-	-	_	4	7'-0"	2	4	4'-7"	2'-0"	2'-6⅞"	2	4	7'-9"
C	-	-	-	-	-	-	-	-	-	-	-	-	-	_	4	8'-0"	2	4	7'-2"	2'-0"	2'-6⅞"	2	4	8'-11"
D	-	-	-	-	-	-	-	-	-	-	-	-	-	_	4	9'-0"	2	4	7'-2"	2'-0"	2'-6⅞"	2	4	10'-0"
E	-	-	-	-	-	-	-	-	-	-	-	-	-	_	4	10'-0"	2	4	9'-8"	1'-11"	2'-6¾"	2	4	11'-2"
F	-	-	-	-	-	-	-	-	-	-	-	-	-	_	4	11'-0"	2	4	9'-8"	1'-11"	2'-6¾"	2	4	12'-3"
G	4	7'-11"	6'-1"	0'-4¼"	9'-10"	8'-0"	0'-4¼"	-	-	-	-	-	-	_	4	12'-0"	2	4	9'-8"	1'-11"	2'-6¾"	2	4	13'-4"
H	4	8'-5"	6'-4"	0'-4⅛"	10'-4"	8'-3"	0'-4⅛"	-	-	-	-	-	-	_	4	13'-6"	2	4	12'-8"	2'-0"	2'-7⅞"	2	4	14'-11"
I	4	5'-9"	2'-11"	0'-4⅛"	7'-8"	4'-10"	0'-4⅛"	5	8'-11"	6'-1"	0'-2¾"	10'-10"	8'-1"	0'-2¾"	4	14'-6"	2	4	12'-7"	2'-0"	2'-7½"	2	4	16'-1"
J	4	6'-3"	3'-5"	0'-4⅛"	8'-2"	5'-4"	0'-4⅛"	5	9'-5"	6'-7"	0'-2¾"	11'-4"	8'-6"	0'-2¾"	4	15'-6"	2	4	15'-2"	2'-0"	2'-7½"	2	4	17'-2"
K	4	6'-9"	3'-11"	0'-4¼"	8'-7"	5'-9"	0'-4¼"	6	9'-11"	7'-1"	0'-2¾"	11'-11"	9'-1"	0'-2¾"	4	16'-6"	2	4	15'-1"	2'-0"	2'-7¼"	2	4	18'-3"
L	4	7'-3"	4'-4"	0'-4¼"	9'-1"	6'-3"	0'-4¼"	6	10'-5"	7'-7"	0'-2¾"	12'-5"	9'-7"	0'-2¾"	4	17'-6"	2	4	15'-1"	2'-0"	2'-7⅜"	2	4	19'-5"
M	4	7'-8"	4'-10"	0'-4¼"	9'-7"	6'-9"	0'-4¼"	6	10'-11"	8'-1"	0'-2¾"	12'-11"	10'-1"	0'-2¾"	4	18'-6"	2	4	17'-8"	2'-0"	2'-7¼"	2	4	20'-6"
N	4	7'-9"	4'-2"	0'-4¼"	9'-7"	6'-1"	0'-4¼"	6	11'-5"	8'-1"	0'-2¾"	13'-5"	10'-1"	0'-2¾"	4	19'-6"	2	4	17'-7"	2'-0"	2'-7⅛"	2	4	21'-8"
O	5	8'-4"	4'-10"	0'-4⅛"	10'-3"	6'-9"	0'-4⅛"	6	11'-11"	8'-8"	0'-2¾"	13'-11"	10'-8"	0'-2¾"	4	21'-0"	2	4	20'-8"	2'-0"	2'-7⅞"	2	4	23'-3"
P	5	8'-4"	4'-5"	0'-4⅛"	10'-3"	6'-5"	0'-4⅛"	6	12'-5"	8'-8"	0'-2¾"	14'-5"	10'-8"	0'-2¾"	4	22'-0"	2	4	20'-7"	2'-0"	2'-7¾"	2	4	24'-4"
Q	5	8'-10"	4'-11"	0'-4⅛"	10'-9"	6'-11"	0'-4⅛"	6	12'-11"	9'-2"	0'-2¾"	14'-11"	11'-2"	0'-2¾"	4	23'-0"	2	4	20'-7"	2'-0"	2'-7¾"	2	4	25'-5"
R	5	9'-4"	5'-5"	0'-4⅛"	11'-3"	7'-4"	0'-4⅛"	7	13'-5"	9'-8"	0'-2¾"	15'-6"	11'-9"	0'-2¾"	4	24'-0"	2	4	23'-2"	2'-1"	2'-7½"	2	4	26'-7"
S	5	10'-0"	6'-2"	0'-4⅛"	12'-0"	8'-1"	0'-4⅛"	7	14'-2"	10'-5"	0'-2¾"	16'-3"	12'-6"	0'-2¾"	4	25'-0"	2	4	23'-1"	2'-1"	2'-7½"	2	4	27'-8"
T	5	10'-4"	6'-1"	0'-4¼"	12'-3"	8'-0"	0'-4¼"	7	14'-11"	10'-8"	0'-2¾"	17'-0"	12'-9"	0'-2¾"	4	26'-0"	2	4	25'-8"	2'-0"	2'-7½"	2	4	28'-10"
U	6	10'-10"	6'-6"	0'-4¼"	12'-10"	8'-7"	0'-4¼"	8	15'-5"	11'-2"	0'-2¾"	17'-7"	13'-4"	0'-2¾"	4	27'-0"	2	4	25'-7"	2'-0"	2'-7⅜"	2	4	29'-11"
V	6	10'-10"	5'-10"	0'-4¼"	12'-10"	7'-10"	0'-4¼"	8	15'-11"	11'-2"	0'-2¾"	18'-1"	13'-5"	0'-2¾"	4	28'-0"	2	4	25'-7"	2'-0"	2'-7⅜"	2	4	31'-0"
W	6	11'-4"	6'-4"	0'-4¼"	13'-4"	8'-4"	0'-4¼"	9	16'-5"	11'-8"	0'-2¾"	18'-10"	14'-1"	0'-2¾"	4	29'-0"	2	4	28'-2"	2'-0"	2'-7⅜"	2	4	32'-2"
X	6	11'-5"	6'-2"	0'-4⅛"	13'-5"	8'-2"	0'-4⅛"	8	16'-11"	11'-9"	0'-2¾"	19'-1"	14'-0"	0'-2¾"	4	30'-6"	2	4	28'-7"	2'-0"	2'-7¾"	2	4	33'-9"
Y	6	11'-11"	6'-7"	0'-4⅛"	13'-11"	8'-8"	0'-4⅛"	8	17'-5"	12'-3"	0'-2¾"	19'-7"	14'-5"	0'-2¾"	4	31'-6"	2	4	31'-2"	2'-0"	2'-7¾"	2	4	34'-10"
Z	7	12'-5"	7'-1"	0'-4⅛"	14'-6"	9'-3"	0'-4⅛"	8	17'-11"	12'-9"	0'-2¾"	20'-1"	14'-11"	0'-2¾"	4	32'-6"	2	4	31'-1"	2'-1"	2'-7½"	2	4	35'-11"
AA	7	12'-10"	7'-7"	0'-4⅛"	15'-0"	9'-8"	0'-4⅛"	9	18'-5"	13'-3"	0'-2¾"	20'-10"	15'-8"	0'-2¾"	4	33'-6"	2	4	31'-1"	2'-1"	2'-7½"	2	4	37'-1"
BB	7	10'-1"	4'-5"	0'-4⅛"	12'-2"	6'-6"	0'-4⅛"	9	18'-11"	10'-5"	0'-2¾"	21'-4"	12'-10"	0'-2¾"	4	34'-6"	2	4	33'-8"	2'-0"	2'-7½"	2	4	38'-2"
CC	7	10'-7"	4'-10"	0'-4¼"	12'-8"	7'-0"	0'-4¼"	9	19'-5"	10'-11"	0'-2¾"	21'-10"	13'-4"	0'-2¾"	4	35'-6"	2	4	33'-7"	2'-1"	2'-7½"	2	4	39'-4"
DD	7	10'-4"	3'-11"	0'-4¼"	12'-5"	6'-0"	0'-4¼"	9	19'-11"	10'-8"	0'-2¾"	22'-4"	13'-2"	0'-2¾"	4	36'-6"	2	4	36'-2"	2'-0"	2'-7½"	2	4	40'-5"
EE	7	10'-11"	4'-7"	0'-4⅛"	13'-1"	6'-9"	0'-4⅛"	10	20'-5"	11'-3"	0'-2¾"	22'-10"	13'-9"	0'-2¾"	4	38'-0"	2	4	36'-7"	2'-0"	2'-7¾"	2	4	42'-0"

A COPY OF THE ORIGINAL SEALED AND SIGNED DRAWING IS ON FILE IN THE CENTRAL OFFICE

SPECIFICATION REFERENCE

WING DETAILS

1½: 1 FILL SLOPE - TYPE II

VIRGINIA DEPARTMENT OF TRANSPORTATION

VDOT

ROAD AND BRIDGE STANDARDS

REVISION DATE 07/12

SHEET 8 OF 8

1006.16

BCW-21

GENERAL NOTES

Specifications:

AASHTO LRFD Bridge Design Specifications 5th Edition 2010; 2011 Interim Revisions; and VDOT Modifications

Limits of validity for Standard Wingwall design

The standard wingwall designs are based on the following assumptions:

there is no structural connection between the wall and the box culvert
traffic surcharge loading is neglected.

Backfill

Backfill shall comprise granular material with an internal friction angle Φ' of at least 32°. Cohesive backfill shall not be permitted. Compaction of the backfill material within a distance of one-half the height of the wall shall be by hand compactors only.

Drainage

The Contractor shall provide the drainage system indicated on Sheet 1.

The cost for the drainage system (including porous backfill, 6" diameter non-rigid tubing and other items required) shall be incidental to the cost bid for Concrete.

Concrete

All concrete shall be Class A4.

Reinforcement

Deformed reinforcing bars shall conform to ASTM A615, Grade 60. All reinforcing bar dimensions on the detailed drawings are to centers of bars except where otherwise noted and are subject to fabrication and construction tolerances.

Dimensions on bar diagrams are out-to-out of bars. Bars are straight unless otherwise shown.

The concrete cover to the outermost reinforcement bars shall be as follows:

Wall footing (all faces) 3" minimum cover
Wall stem (all faces) 2½" minimum cover

At the Contractor's option WV Series bars may be spliced at top of the footing in order to facilitate construction. Splice lengths shall be in accordance with Table C on Sheet 1. No additional compensation shall be provided for the increase in reinforcing steel quantity due to the splices.

Miscellaneous

Weepholes shall be placed at the lowest point feasible for free drainage away from the wing.

Four Type I Wings are to be used for straight crossings and skews up to 20°. Two Type I and two Type II Wings are to be used for skews from 25° to 45°. For skews above 45°, special design wings are required. The wingwall to be used for each culvert is shown on the BC series sheets.

The designs shown are applicable for a 45° skew with the roadway and other conditions indicated. Any change in these conditions invalidates these designs.

Quantities shown are for one wing.

WING	Wall Quantities		qr_min ksf High End	qr_min ksf Low End
	Concrete CY	Reinforcement LB		
A	2.3	209	0.91	0.46
B	2.8	245	1.05	0.46
C	3.2	273	1.21	0.49
D	4.0	306	1.49	0.52
E	4.4	346	1.49	0.52
F	4.9	376	1.71	0.52
G	5.6	434	1.79	0.55
H	6.2	463	2.03	0.55
I	7.1	552	2.10	0.60
J	7.7	589	2.36	0.60
K	8.6	672	2.43	0.65
L	9.3	738	2.70	0.65
M	10.3	870	2.76	0.71
N	10.7	950	3.05	0.85
O	11.7	1014	3.10	0.85
P	13.2	1172	3.17	0.88
Q	14.0	1337	3.45	0.88
R	15.3	1444	3.51	0.95
S	16.5	1591	3.58	0.95
T	17.5	1695	3.86	1.03
U	18.8	2002	3.92	1.03
V	20.3	2238	3.99	1.11
W	21.7	2403	4.07	1.11
X	27.0	2884	4.28	1.27
Y	31.7	3334	4.36	1.30
Z	33.9	3578	4.46	1.39
AA	35.9	3876	4.56	1.39
BB	38.8	4522	4.56	1.48
CC	41.0	4747	4.66	1.48
DD	50.0	5689	4.99	1.71
EE	52.6	6313	5.10	1.71

A COPY OF THE ORIGINAL SEALED AND SIGNED DRAWING IS ON FILE IN THE CENTRAL OFFICE

VDOT
ROAD AND BRIDGE STANDARDS

SHEET 1 OF 8 | REVISION DATE
1007.01 | 07/12

WING DETAIL

2:1 FILL SLOPE - TYPE I

VIRGINIA DEPARTMENT OF TRANSPORTATION

SPECIFICATION REFERENCE

BCW-21

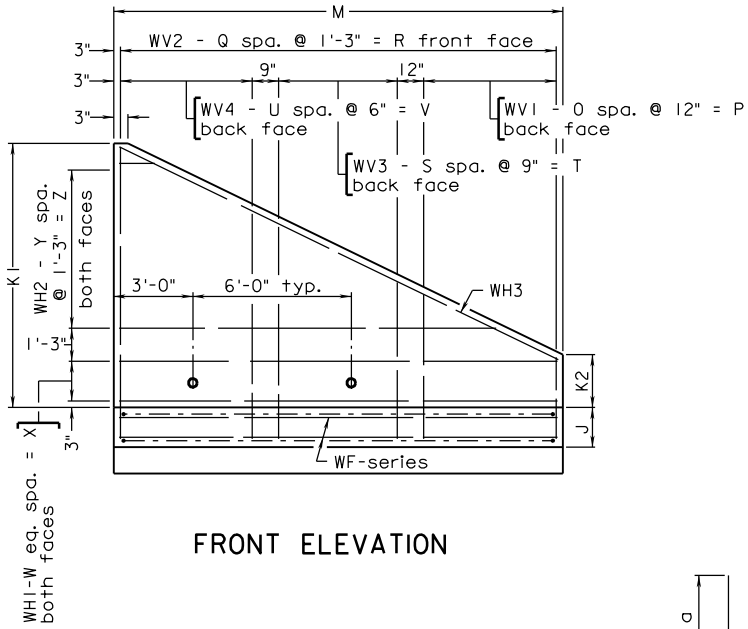

FRONT ELEVATION

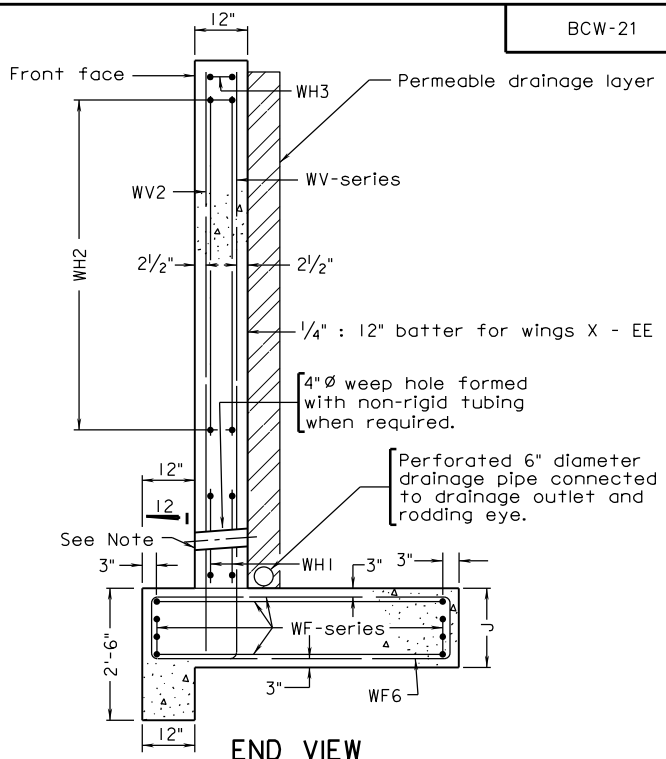

END VIEW

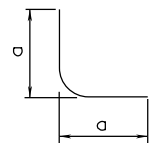

WF11

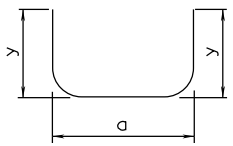

WF1 TO WF3, WF5 TO WF7

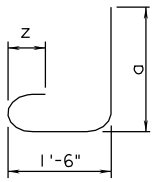

WV1, WV3, WV4

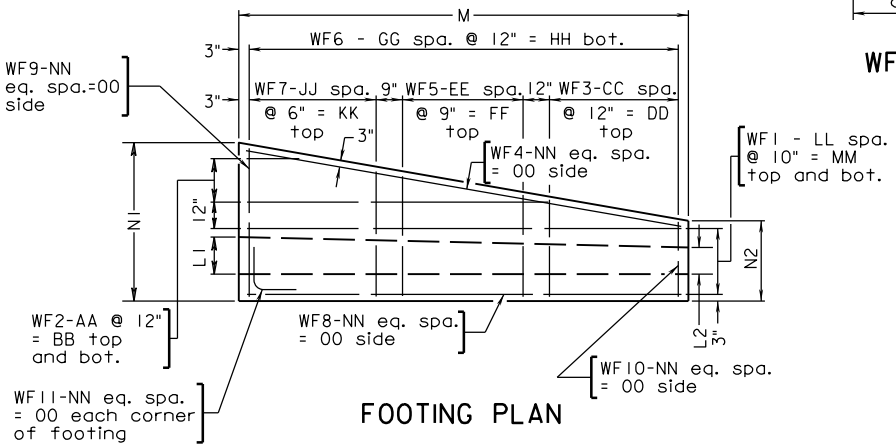

FOOTING PLAN

TABLE A	
Wall	y
A-W	9½"
X	1'-0½"
Y-CC	1'-3½"
DD-EE	1'-9½"

TABLE B		
Bar Size	Pin Dia.	Z
#3	2¼"	4"
#4	3"	4½"
#5	3¾"	5"
#6	4½"	6"
#7	5¼"	7"
#8	6"	8"
#9	9"	10⅛"

TABLE C	
Bar Size	Splice Length
#4	1'- 9"
#5	2'- 4"
#6	2'- 7"
#7	3'- 3"
#8	4'- 2"
#9	5'- 4"

A COPY OF THE ORIGINAL SEALED AND SIGNED DRAWING AND DESIGN STATEMENT IS ON FILE IN THE CENTRAL OFFICE.

SPECIFICATION REFERENCE

WING DETAIL

2:1 FILL SLOPE - TYPE I

VIRGINIA DEPARTMENT OF TRANSPORTATION

VDOT
ROAD AND BRIDGE STANDARDS

REVISION DATE 07/16

SHEET 2 OF 8

1007.02

BCW-21

WING	WALL DIMENSIONS								No. WEEP HOLES	FOOTING BAR SPACINGS													
	J	K1	K2	L1	L2	M	N1	N2		WF1		WF2		WF3		WF4, WF8 to WF10		WF5		WF6		WF7	
										LL	MM	AA	BB	CC	DD	NN	OO	EE	FF	GG	HH	JJ	KK
A	1'-6"	4'-0"	1'-6"	1'-0"	1'-0"	7'-0"	4'-0"	3'-0"	-	3	2'-6"	-	-	6	6'-0"	1	0'-8"	-	-	6	6'-0"	-	-
B	1'-6"	4'-6"	1'-6"	1'-0"	1'-0"	8'-0"	4'-0"	3'-0"	-	3	2'-6"	-	-	7	7'-0"	1	0'-8"	-	-	7	7'-0"	-	-
C	1'-6"	5'-0"	1'-9"	1'-0"	1'-0"	9'-0"	4'-0"	3'-0"	-	3	2'-6"	-	-	8	8'-0"	1	0'-8"	-	-	8	8'-0"	-	-
D	1'-6"	5'-6"	2'-0"	1'-0"	1'-0"	10'-0"	4'-6"	3'-0"	-	3	2'-6"	-	-	9	9'-0"	1	0'-8"	-	-	9	9'-0"	-	-
E	1'-6"	6'-0"	2'-0"	1'-0"	1'-0"	11'-0"	4'-6"	3'-0"	-	3	2'-6"	-	-	10	10'-0"	1	0'-8"	-	-	10	10'-0"	-	-
F	1'-6"	6'-6"	2'-0"	1'-0"	1'-0"	12'-0"	4'-6"	3'-0"	-	3	2'-6"	-	-	11	11'-0"	1	0'-8"	-	-	11	11'-0"	-	-
G	1'-6"	7'-0"	2'-3"	1'-0"	1'-0"	13'-0"	5'-0"	3'-0"	-	3	2'-6"	-	-	12	12'-0"	1	0'-8"	-	-	12	12'-0"	-	-
H	1'-6"	7'-6"	2'-3"	1'-0"	1'-0"	14'-0"	5'-0"	3'-0"	-	3	2'-6"	-	-	13	13'-0"	1	0'-8"	-	-	13	13'-0"	-	-
I	1'-6"	8'-0"	2'-6"	1'-0"	1'-0"	15'-0"	5'-6"	3'-0"	-	3	2'-6"	1	1'-0"	9	9'-0"	1	0'-8"	6	4'-6"	14	14'-0"	-	-
J	1'-6"	8'-6"	2'-6"	1'-0"	1'-0"	16'-0"	5'-6"	3'-0"	-	3	2'-6"	1	1'-0"	9	9'-0"	1	0'-8"	7	5'-3"	15	15'-0"	-	-
K	1'-6"	9'-0"	2'-9"	1'-0"	1'-0"	17'-0"	6'-0"	3'-0"	-	3	2'-6"	1	1'-0"	10	10'-0"	1	0'-8"	7	5'-3"	16	16'-0"	-	-
L	1'-6"	9'-6"	2'-9"	1'-0"	1'-0"	18'-0"	6'-0"	3'-0"	-	3	2'-6"	1	1'-0"	10	10'-0"	1	0'-8"	8	6'-0"	17	17'-0"	-	-
M	1'-6"	10'-0"	3'-0"	1'-0"	1'-0"	19'-0"	6'-6"	3'-0"	-	3	2'-6"	2	2'-0"	11	11'-0"	1	0'-8"	8	6'-0"	18	18'-0"	-	-
N	1'-6"	10'-6"	3'-6"	1'-0"	1'-0"	19'-0"	6'-6"	3'-0"	-	3	2'-6"	2	2'-0"	11	11'-0"	1	0'-8"	8	6'-0"	18	18'-0"	-	-
O	1'-6"	11'-0"	3'-6"	1'-0"	1'-0"	20'-0"	7'-0"	3'-0"	1	3	2'-6"	2	2'-0"	12	12'-0"	1	0'-8"	8	6'-0"	19	19'-0"	-	-
P	1'-6"	11'-6"	3'-9"	1'-0"	1'-0"	21'-0"	7'-6"	3'-6"	1	3	2'-6"	3	3'-0"	12	12'-0"	1	0'-8"	10	7'-6"	20	20'-0"	-	-
Q	1'-6"	12'-0"	3'-9"	1'-0"	1'-0"	22'-0"	7'-6"	3'-6"	1	3	2'-6"	3	3'-0"	13	13'-0"	1	0'-8"	10	7'-6"	21	21'-0"	-	-
R	1'-6"	12'-6"	4'-0"	1'-0"	1'-0"	23'-0"	8'-0"	3'-6"	1	3	2'-6"	3	3'-0"	10	10'-0"	1	0'-8"	9	6'-9"	22	22'-0"	8	4'-0"
S	1'-6"	13'-0"	4'-0"	1'-0"	1'-0"	24'-0"	8'-6"	3'-6"	1	3	2'-6"	4	4'-0"	11	11'-0"	1	0'-8"	9	6'-9"	23	23'-0"	8	4'-0"
T	1'-6"	13'-6"	4'-3"	1'-0"	1'-0"	25'-0"	8'-6"	3'-6"	2	3	2'-6"	4	4'-0"	12	12'-0"	1	0'-8"	9	6'-9"	24	24'-0"	8	4'-0"
U	1'-6"	14'-0"	4'-3"	1'-0"	1'-0"	26'-0"	9'-0"	3'-6"	2	3	2'-6"	4	4'-0"	12	12'-0"	1	0'-8"	9	6'-9"	25	25'-0"	10	5'-0"
V	1'-6"	14'-6"	4'-6"	1'-0"	1'-0"	27'-0"	9'-6"	3'-6"	2	3	2'-6"	5	5'-0"	10	10'-0"	1	0'-8"	13	9'-9"	26	26'-0"	10	5'-0"
W	1'-6"	15'-0"	4'-6"	1'-0"	1'-0"	28'-0"	10'-0"	3'-6"	2	3	2'-6"	5	5'-0"	11	11'-0"	1	0'-8"	13	9'-9"	27	27'-0"	10	5'-0"
X	1'-9"	15'-6"	4'-9"	1'-3¾"	1'-1⅛"	29'-0"	11'-0"	4'-0"	2	4	3'-4"	5	5'-0"	11	11'-0"	1	0'-11"	13	9'-9"	28	28'-0"	12	6'-0"
Y	2'-0"	16'-0"	4'-9"	1'-4"	1'-1⅛"	30'-0"	12'-0"	4'-6"	3	4	3'-4"	6	6'-0"	10	10'-0"	2	0'-7"	17	12'-9"	29	29'-0"	10	5'-0"
Z	2'-0"	16'-6"	5'-0"	1'-4⅛"	1'-1¼"	31'-0"	12'-6"	4'-6"	3	4	3'-4"	7	7'-0"	10	10'-0"	2	0'-7"	17	12'-9"	30	30'-0"	12	6'-0"
AA	2'-0"	17'-0"	5'-0"	1'-4¼"	1'-1¼"	32'-0"	13'-0"	4'-6"	3	4	3'-4"	7	7'-0"	11	11'-0"	2	0'-7"	17	12'-9"	31	31'-0"	12	6'-0"
BB	2'-0"	17'-6"	5'-3"	1'-4⅜"	1'-1¼"	33'-0"	14'-0"	4'-6"	3	4	3'-4"	8	8'-0"	12	12'-0"	2	0'-7"	17	12'-9"	32	32'-0"	12	6'-0"
CC	2'-0"	18'-0"	5'-3"	1'-4½"	1'-1¼"	34'-0"	14'-6"	4'-6"	3	4	3'-4"	9	9'-0"	13	13'-0"	2	0'-7"	17	12'-9"	33	33'-0"	12	6'-0"
DD	2'-6"	18'-6"	5'-6"	1'-4⅝"	1'-1⅜"	35'-0"	15'-0"	5'-0"	4	5	4'-2"	8	8'-0"	12	12'-0"	2	0'-10"	17	12'-9"	34	34'-0"	16	8'-0"
EE	2'-6"	19'-0"	5'-6"	1'-4¾"	1'-1⅜"	36'-0"	15'-6"	5'-0"	4	5	4'-2"	9	9'-0"	12	12'-0"	2	0'-10"	17	12'-9"	35	35'-0"	18	9'-0"

A COPY OF THE ORIGINAL SEALED AND SIGNED DRAWING IS ON FILE IN THE CENTRAL OFFICE

VDOT
ROAD AND BRIDGE STANDARDS

SHEET 3 OF 8 | REVISION DATE
1007.03 | 07/12

WING DETAILS

2:1 FILL SLOPE -TYPE I

VIRGINIA DEPARTMENT OF TRANSPORTATION

SPECIFICATION REFERENCE

WING	WF1				WF2								WF3						
	SIZE	a	LENGTH	* Ea	SIZE	a			LENGTH			* Ea	SIZE	a			LENGTH		
						FROM	TO	VARY BY	FROM	TO	VARY BY			FROM	TO	VARY BY	FROM	TO	VARY BY
A	4	6'-5"	7'-9"	2	4	1'-2"	8'-2"	-	2'-6"	9'-6"	-	2	4	3'-5"	2'-6"	0'-1¾"	4'-9"	3'-11"	0'-1¾"
B	4	7'-5"	8'-9"	2	4	1'-5"	9'-5"	-	2'-9"	10'-9"	-	2	4	3'-5"	2'-6"	0'-1½"	4'-9"	3'-11"	0'-1½"
C	4	8'-5"	9'-9"	2	4	1'-8"	10'-8"	-	3'-0"	12'-0"	-	2	4	3'-5"	2'-6"	0'-1⅓"	4'-9"	3'-11"	0'-1⅓"
D	4	9'-5"	10'-9"	2	4	4'-5"	4'-5"	-	5'-9"	5'-9"	-	2	4	3'-11"	2'-6"	0'-1¾"	5'-3"	3'-11"	0'-1¾"
E	4	10'-5"	11'-9"	2	4	4'-11"	4'-11"	-	6'-3"	6'-3"	-	2	4	3'-11"	2'-6"	0'-1⅝"	5'-3"	3'-11"	0'-1⅝"
F	4	11'-5"	12'-9"	2	4	5'-5"	5'-5"	-	6'-9"	6'-9"	-	2	4	3'-11"	2'-6"	0'-1½"	5'-3"	3'-11"	0'-1½"
G	4	12'-5"	13'-9"	2	4	7'-6"	7'-6"	-	8'-11"	8'-11"	-	2	4	4'-5"	2'-6"	0'-1¾"	5'-9"	3'-11"	0'-1¾"
H	4	13'-5"	14'-9"	2	4	8'-2"	8'-2"	-	9'-6"	9'-6"	-	2	4	4'-5"	2'-6"	0'-1¾"	5'-9"	3'-11"	0'-1¾"
I	4	14'-5"	15'-9"	2	4	9'-11"	3'-11"	6'-0"	11'-3"	5'-3"	6'-0"	2	4	4'-0"	2'-6"	0'-2"	5'-4"	3'-10"	0'-2"
J	4	15'-5"	16'-9"	2	4	10'-7"	4'-2"	6'-4⅞"	11'-11"	5'-7"	6'-4⅞""	2	4	3'-11"	2'-6"	0'-1⅞"	5'-3"	3'-10"	0'-1⅞"
K	4	16'-5"	17'-9"	2	4	12'-2"	6'-6"	5'-8"	13'-6"	7'-10"	5'-8"	2	4	4'-3"	2'-6"	0'-2¼"	5'-8"	3'-11"	0'-2¼"
L	4	17'-5"	18'-9"	2	4	12'-11"	6'-11"	6'-0"	14'-3"	8'-3"	6'-0"	2	4	4'-3"	2'-7"	0'-2"	5'-7"	3'-11"	0'-2"
M	4	18'-5"	19'-9"	2	4	14'-4"	3'-5"	5'-5⅛"	15'-8"	4'-10"	5'-5⅛"	2	4	4'-7"	2'-7"	0'-2⅛"	5'-11"	3'-11"	0'-2⅛"
N	4	18'-5"	19'-9"	2	4	14'-4"	3'-5"	5'-5⅛"	15'-8"	4'-10"	5'-5⅛"	2	4	4'-7"	2'-7"	0'-2⅛"	5'-11"	3'-11"	0'-2⅛"
O	4	19'-5"	20'-9"	2	4	15'-8"	5'-8"	5'-0"	17'-0"	7'-0"	5'-0"	2	4	5'-0"	2'-7"	0'-2⅜"	6'-4"	3'-11"	0'-2⅜"
P	4	20'-5"	21'-9"	2	4	19'-1"	3'-4"	5'-3"	20'-5"	4'-8"	5'-3"	2	4	5'-3"	3'-0"	0'-2⅜"	6'-8"	4'-4"	0'-2⅜"
Q	4	21'-5"	22'-9"	2	4	20'-0"	3'-6"	5'-6"	21'-5"	4'-11"	5'-6"	2	4	5'-4"	3'-0"	0'-2⅛"	6'-8"	4'-4"	0'-2⅛"
R	4	22'-5"	23'-9"	2	4	21'-1"	5'-9"	5'-1⅓"	22'-6"	7'-2"	5'-1⅓"	2	4	4'-11"	3'-0"	0'-2½"	6'-4"	4'-4"	0'-2½"
S	4	23'-5"	24'-9"	2	4	22'-2"	3'-0"	4'-9½"	23'-7"	4'-4"	4'-9½"	2	4	5'-4"	3'-0"	0'-2⅜"	6'-8"	4'-4"	0'-2⅜"
T	4	24'-5"	25'-9"	2	4	23'-2"	3'-2"	5'-0"	24'-6"	4'-6"	5'-0"	2	4	5'-4"	3'-0"	0'-2½"	6'-9"	4'-4"	0'-2½"
U	4	25'-5"	26'-9"	2	4	24'-2"	5'-3"	4'-8¾"	25'-7"	6'-8"	4'-8¾"	2	4	5'-6"	3'-0"	0'-2⅝"	6'-11"	4'-4"	0'-2⅝"
V	4	26'-5"	27'-9"	2	4	25'-3"	2'-9"	4'-6"	26'-8"	4'-2"	4'-6"	2	4	5'-2"	3'-0"	0'-2¾"	6'-7"	4'-4"	0'-2¾"
W	4	27'-5"	28'-9"	2	4	26'-4"	4'-9"	4'-3¾"	27'-8"	6'-2"	4'-3¾"	2	4	5'-6"	3'-0"	0'-2⅞"	6'-11"	4'-4"	0'-2⅞"
X	4	28'-5"	30'-3"	2	5	26'-0"	5'-3"	4'-1¾"	27'-9"	7'-1"	4'-1¾"	2	5	6'-2"	3'-6"	0'-3"	8'-0"	5'-4"	0'-3"
Y	4	29'-5"	31'-9"	2	5	29'-1"	5'-1"	4'-0"	31'-4"	4'-8"	4'-0"	2	5	6'-6"	4'-0"	0'-3"	8'-10"	6'-4"	0'-3"
Z	4	30'-5"	32'-9"	2	5	30'-1"	2'-11"	3'-10½"	32'-5"	5'-3"	3'-10½"	2	5	6'-7"	4'-0"	0'-3⅛"	8'-11"	6'-4"	0'-3⅛"
AA	4	31'-5"	33'-9"	2	5	31'-1"	4'-9"	3'-9⅛"	33'-5"	7'-0"	3'-9⅛"	2	5	6'-11"	4'-0"	0'-3½"	9'-3"	6'-4"	0'-3½"
BB	4	32'-5"	34'-9"	2	5	32'-1"	4'-4"	3'-5⅝"	34'-5"	6'-7"	3'-5⅝"	2	5	7'-5"	4'-0"	0'-3½"	9'-9"	6'-4"	0'-3½"
CC	4	33'-5"	35'-9"	2	5	33'-1"	2'-6"	3'-4¾"	35'-5"	4'-10"	3'-4¾"	2	5	7'-10"	4'-0"	0'-3½"	10'-2"	6'-4"	0'-3½"
DD	5	34'-5"	37'-8"	2	5	32'-11"	4'-11"	3'-6"	36'-3"	8'-3"	3'-6"	2	5	7'-11"	4'-6"	0'-3½"	11'-3"	7'-10"	0'-3½"
EE	5	35'-5"	38'-8"	2	5	33'-11"	3'-1"	3'-5⅛"	37'-3"	6'-5"	3'-5⅛"	2	5	8'-0"	4'-6"	0'-3½"	11'-4"	7'-10"	0'-3½"

A COPY OF THE ORIGINAL SEALED AND SIGNED DRAWING IS ON FILE IN THE CENTRAL OFFICE

SPECIFICATION REFERENCE

WING DETAILS

2:1 FILL SLOPE -TYPE I

VIRGINIA DEPARTMENT OF TRANSPORTATION

VDOT

ROAD AND BRIDGE STANDARDS

REVISION DATE	SHEET 4 OF 8
07/12	1007.04

BCW-21

WING	WF4		WF5							WF6						
	SIZE	LENGTH	SIZE	a			LENGTH			SIZE	a			LENGTH		
				FROM	TO	VARY BY	FROM	TO	VARY BY		FROM	TO	VARY BY	FROM	TO	VARY BY
A	4	6'-2"	-	-	-	-	-	-	-	4	3'-4"	2'-6"	0'- 1⅝"	4'-9"	3'-10"	0'- 1⅝"
B	4	7'-2"	-	-	-	-	-	-	-	4	3'-4"	2'-6"	0'- 1½"	4'-9"	3'-10"	0'- 1½"
C	4	8'-2"	-	-	-	-	-	-	-	4	3'-4"	2'-6"	0'- 1⅓"	4'-9"	3'-10"	0'- 1⅓"
D	4	9'-3"	-	-	-	-	-	-	-	4	3'-10"	2'-6"	0'- 1¾"	5'-3"	3'-10"	0'- 1¾"
E	4	10'-3"	-	-	-	-	-	-	-	4	3'-10"	2'-6"	0'- 1⅝"	5'-3"	3'-10"	0'- 1⅝"
F	4	11'-3"	-	-	-	-	-	-	-	4	3'-10"	2'-6"	0'- 1½"	5'-3"	3'-10"	0'- 1½"
G	4	12'-3"	-	-	-	-	-	-	-	4	4'-4"	2'-6"	0'- 1¾"	5'-9"	3'-10"	0'- 1¾"
H	4	13'-3"	-	-	-	-	-	-	-	4	4'-4"	2'-6"	0'- 1⅝"	5'-9"	3'-10"	0'- 1⅝"
I	4	14'-4"	4	4'-11"	4'-2"	0'- 1½"	6'-3"	5'-6"	0'- 1½"	4	4'-10"	2'-6"	0'- 2"	6'-3"	3'-11"	0'- 2"
J	4	15'-4"	4	4'-11"	4'-1"	0'- 1⅜"	6'-3"	5'-5"	0'- 1⅜"	4	4'-10"	2'-6"	0'- 1⅞"	6'-3"	3'-10"	0'- 1⅞"
K	4	16'-5"	4	5'-5"	4'-5"	0'- 1½"	6'-9"	5'-10"	0'- 1½"	4	5'-4"	2'-6"	0'- 2"	6'-9"	3'-11"	0'- 2"
L	4	17'-5"	4	5'-5"	4'-5"	0'- 1½"	6'-9"	5'-9"	0'- 1½"	4	5'-4"	2'-6"	0'- 2"	6'-9"	3'-11"	0'- 2"
M	4	18'-5"	5	5'-11"	4'-9"	0'- 1⅝"	7'-2"	6'-1"	0'- 1⅝"	4	5'-10"	2'-6"	0'- 2⅛"	7'-2"	3'-11"	0'- 2⅛"
N	4	18'-5"	5	5'-11"	4'-9"	0'- 1⅝"	7'-2"	6'-1"	0'- 1⅝"	4	5'-10"	2'-6"	0'- 2⅛"	7'-2"	3'-11"	0'- 2⅛"
O	4	19'-6"	5	6'-4"	5'-2"	0'- 1¾"	7'-8"	6'-6"	0'- 1¾"	4	6'-4"	2'-6"	0'- 2⅜"	7'-8"	3'-11"	0'- 2⅜"
P	4	20'-6"	6	6'-11"	5'-5"	0'- 1⅝"	8'-2"	6'-9"	0'- 1⅝"	4	6'-10"	3'-0"	0'- 2¼"	8'-2"	4'-5"	0'- 2¼"
Q	4	21'-6"	6	6'-11"	5'-6"	0'- 1⅝"	8'-2"	6'-9"	0'- 1⅝"	4	6'-10"	3'-0"	0'- 2⅛"	8'-2"	4'-5"	0'- 2⅛"
R	4	22'-7"	5	6'-5"	5'-1"	0'- 1¾"	7'-9"	6'-5"	0'- 1¾"	4	7'-4"	3'-0"	0'- 2¼"	8'-8"	4'-5"	0'- 2¼"
S	4	23'-7"	5	6'-11"	5'-6"	0'- 1⅞"	8'-2"	6'-10"	0'- 1⅞"	4	7'-10"	3'-0"	0'- 2½"	9'-2"	4'-5"	0'- 2½"
T	4	24'-7"	6	6'-11"	5'-7"	0'- 1⅝"	8'-2"	6'-10"	0'- 1⅝"	4	7'-10"	3'-0"	0'- 2⅜"	9'-2"	4'-5"	0'- 2⅜"
U	4	25'-9"	6	7'-2"	5'-9"	0'- 1⅞"	8'-5"	7'-0"	0'- 1⅞"	4	8'-4"	3'-0"	0'- 2½"	9'-8"	4'-5"	0'- 2½"
V	4	26'-10"	6	7'-7"	5'-5"	0'- 2"	8'-10"	6'-8"	0'- 2"	4	8'-10"	3'-1"	0'- 2⅝"	10'-2"	4'-5"	0'- 2⅝"
W	4	27'-11"	7	8'-0"	5'-9"	0'- 2"	9'-3"	7'-0"	0'- 2"	4	9'-4"	3'-1"	0'- 2¾"	10'-8"	4'-5"	0'- 2¾"
X	4	29'-0"	6	8'-9"	6'-4"	0'- 2⅛"	10'-6"	8'-2"	0'- 2⅛"	5	10'-4"	3'-7"	0'- 2⅞"	12'-2"	5'-5"	0'- 2⅞"
Y	4	30'-1"	6	9'-11"	6'-9"	0'- 1¼"	12'-2"	9'-0"	0'- 1¼"	5	11'-4"	4'-1"	0'- 3"	13'-8"	6'-5"	0'- 3"
Z	4	31'-2"	6	10'-1"	6'-10"	0'- 2⅓"	12'-5"	9'-1"	0'- 2⅓"	5	11'-10"	4'-1"	0'- 3"	14'-2"	6'-5"	0'- 3"
AA	4	32'-3"	7	10'-7"	7'-2"	0'- 2⅜"	12'-9"	9'-5"	0'- 2⅜"	5	12'-4"	4'-1"	0'- 3⅛"	14'-8"	6'-5"	0'- 3⅛"
BB	4	33'-6"	7	11'-5"	7'-9"	0'- 2½"	13'-7"	9'-11"	0'- 2½"	5	13'-4"	4'-1"	0'- 3⅜"	15'-8"	6'-5"	0'- 3⅜"
CC	4	34'-7"	7	11'-10"	8'-1"	0'- 2⅝"	14'-1"	10'-4"	0'- 2⅝"	5	13'-10"	4'-1"	0'- 3½"	16'-2"	6'-5"	0'- 3½"
DD	5	35'-7"	7	11'-10"	8'-2"	0'- 2½"	15'-1"	11'-5"	0'- 2½"	5	14'-4"	4'-7"	0'- 3⅜"	17'-8"	7'-11"	0'- 3⅜"
EE	5	36'-8"	7	12'-0"	8'-3"	0'- 2⅝"	15'-3"	11'-6"	0'- 2⅝"	5	14'-10"	4'-7"	0'- 3½"	18'-2"	7'-11"	0'- 3½"

A COPY OF THE ORIGINAL SEALED AND SIGNED DRAWING IS ON FILE IN THE CENTRAL OFFICE

VDOT
ROAD AND BRIDGE STANDARDS

SHEET 5 OF 8 | REVISION DATE
1007.05 | 07/12

WING DETAILS

2:1 FILL SLOPE - TYPE I

VIRGINIA DEPARTMENT OF TRANSPORTATION

SPECIFICATION REFERENCE

BCW-21

WING	WF7							WF8		WF9		WF10		WF11			
	SIZE	a			LENGTH			SIZE	LENGTH	SIZE	LENGTH	SIZE	LENGTH	SIZE	a	LENGTH	* Ea
		FROM	TO	VARY BY	FROM	TO	VARY BY										
A	-	-	-	-	-	-	-	4	6'-2"	4	3'-2"	4	2'-2"	4	2'-2"	4'-2"	4
B	-	-	-	-	-	-	-	4	7'-2"	4	3'-2"	4	2'-2"	4	2'-2"	4'-2"	4
C	-	-	-	-	-	-	-	4	8'-2"	4	3'-2"	4	2'-2"	4	2'-2"	4'-2"	4
D	-	-	-	-	-	-	-	4	9'-2"	4	3'-8"	4	2'-2"	4	2'-2"	4'-2"	4
E	-	-	-	-	-	-	-	4	10'-2"	4	3'-8"	4	2'-2"	4	2'-2"	4'-2"	4
F	-	-	-	-	-	-	-	4	11'-2"	4	3'-8"	4	2'-2"	4	2'-2"	4'-2"	4
G	-	-	-	-	-	-	-	4	12'-2"	4	4'-2"	4	2'-2"	4	2'-2"	4'-2"	4
H	-	-	-	-	-	-	-	4	13'-2"	4	4'-2"	4	2'-2"	4	2'-2"	4'-2"	4
I	-	-	-	-	-	-	-	4	14'-2"	4	4'-8"	4	2'-2"	4	2'-2"	4'-2"	4
J	-	-	-	-	-	-	-	4	15'-2"	4	4'-8"	4	2'-2"	4	2'-2"	4'-2"	4
K	-	-	-	-	-	-	-	4	16'-2"	4	5'-2"	4	2'-2"	4	2'-2"	4'-2"	4
L	-	-	-	-	-	-	-	4	17'-2"	4	5'-2"	4	2'-2"	4	2'-2"	4'-2"	4
M	-	-	-	-	-	-	-	4	18'-2"	4	5'-8"	4	2'-2"	4	2'-2"	4'-2"	4
N	-	-	-	-	-	-	-	4	18'-2"	4	5'-8"	4	2'-2"	4	2'-2"	4'-2"	4
O	-	-	-	-	-	-	-	4	19'-2"	4	6'-2"	4	2'-2"	4	2'-2"	4'-2"	4
P	-	-	-	-	-	-	-	4	20'-2"	4	6'-8"	4	2'-8"	4	2'-2"	4'-2"	4
Q	-	-	-	-	-	-	-	4	21'-2"	4	6'-8"	4	2'-8"	4	2'-2"	4'-2"	4
R	5	7'-4"	6'-7"	0'-1⅛"	8'-8"	7'-11"	0'-1⅛"	4	22'-2"	4	7'-2"	4	2'-8"	4	2'-2"	4'-2"	4
S	6	7'-10"	7'-0"	0'-1¼"	9'-2"	8'-4"	0'-1¼"	4	23'-2"	4	7'-8"	4	2'-8"	4	2'-2"	4'-2"	4
T	6	7'-10"	7'-1"	0'-1⅛"	9'-2"	8'-4"	0'-1⅛"	4	24'-2"	4	7'-8"	4	2'-8"	4	2'-2"	4'-2"	4
U	6	8'-4"	7'-4"	0'-1¼"	9'-8"	8'-7"	0'-1¼"	4	25'-2"	4	8'-2"	4	2'-8"	4	2'-2"	4'-2"	4
V	6	8'-10"	7'-9"	0'-1⅓"	10'-2"	9'-0"	0'-1⅓"	4	26'-2"	4	8'-8"	4	2'-8"	4	2'-2"	4'-2"	4
W	6	9'-4"	8'-2"	0'-1⅜"	10'-8"	9'-6"	0'-1⅜"	4	27'-2"	4	9'-2"	4	2'-8"	4	2'-2"	4'-2"	4
X	6	10'-4"	8'-11"	0'-1⅜"	12'-2"	10'-8"	0'-1⅜"	4	28'-2"	4	10'-2"	4	3'-2"	4	2'-2"	4'-2"	4
Y	7	11'-4"	10'-1"	0'-1½"	13'-7"	12'-4"	0'-1½"	4	29'-2"	4	11'-2"	4	3'-8"	4	2'-2"	4'-2"	4
Z	7	11'-10"	10'-4"	0'-1½"	14'-1"	12'-6"	0'-1½"	4	30'-2"	4	11'-8"	4	3'-8"	4	2'-2"	4'-2"	4
AA	7	12'-4"	10'-9"	0'-1½"	14'-7"	13'-0"	0'-1½"	4	31'-2"	4	12'-2"	4	3'-8"	4	2'-2"	4'-2"	4
BB	7	13'-4"	11'-7"	0'-1⅝"	15'-7"	13'-10"	0'-1⅝"	4	32'-2"	4	13'-2"	4	3'-8"	4	2'-2"	4'-2"	4
CC	7	13'-10"	12'-1"	0'-1¾"	16'-1"	14'-4"	0'-1¾"	4	33'-2"	4	13'-8"	4	3'-8"	4	2'-2"	4'-2"	4
DD	7	14'-4"	12'-1"	0'-1⅝"	17'-7"	15'-3"	0'-1⅝"	5	34'-2"	5	14'-2"	5	4'-2"	5	2'-9"	5'-4"	4
EE	7	14'-10"	12'-3"	0'-1¾"	18'-1"	15'-5"	0'-1¾"	5	35'-2"	5	14'-8"	5	4'-2"	5	2'-9"	5'-4"	4

A COPY OF THE ORIGINAL SEALED AND SIGNED DRAWING IS ON FILE IN THE CENTRAL OFFICE

SPECIFICATION REFERENCE

WING DETAILS

2:1 FILL SLOPE - TYPE I

VIRGINIA DEPARTMENT OF TRANSPORTATION

VDOT

ROAD AND BRIDGE STANDARDS

REVISION DATE 07/12

SHEET 6 OF 8

1007.06

BCW-21

WING	STEM BAR SPACINGS												WV1							WV2			
	WV1		WV2		WV3		WV4		WH1		WH2		SIZE	a			LENGTH			SIZE	LENGTH		
	O	P	Q	R	S	T	U	V	W	X	Y	Z		FROM	TO	VARY BY	FROM	TO	VARY BY		FROM	TO	VARY BY
A	6	6'-0"	5	6'-3"	-	-	-	-	-	-	1	1'-3"	4	4'-11"	2'-9"	0'-4⅓"	6'-10"	4'-8"	0'-4⅓"	4	4'-11"	2'-8"	0'-5⅜"
B	7	7'-0"	6	7'-6"	-	-	-	-	1	0'-6"	1	1'-3"	4	5'-5"	2'-9"	0'-4½"	7'-4"	4'-8"	0'-4½"	4	5'-5"	2'-7"	0'-5⅝"
C	8	8'-0"	6	7'-6"	-	-	-	-	1	1'-0"	1	1'-3"	4	5'-11"	3'-0"	0'-4⅜"	7'-10"	4'-11"	0'-4⅜"	4	5'-11"	3'-2"	0'-5⅜"
D	9	9'-0"	7	8'-9"	-	-	-	-	-	-	2	2'-6"	4	6'-11"	3'-3"	0'-4⅝"	8'-10"	5'-2"	0'-4⅝"	4	6'-11"	3'-5"	0'-6"
E	10	10'-0"	8	10'-0"	-	-	-	-	1	0'-9"	2	2'-6"	4	6'-11"	3'-3"	0'-4⅜"	8'-10"	5'-2"	0'-4⅜"	4	6'-11"	3'-3"	0'-5⅜"
F	11	11'-0"	9	11'-3"	-	-	-	-	1	1'-3"	2	2'-6"	4	7'-5"	3'-3"	0'-4½"	9'-4"	5'-2"	0'-4½"	4	7'-5"	3'-2"	0'-5⅝"
G	12	12'-0"	10	12'-6"	-	-	-	-	2	1'-9"	2	2'-6"	4	7'-11"	3'-6"	0'-4⅜"	9'-10"	5'-5"	0'-4⅜"	4	7'-11"	3'-4"	0'-5½"
H	13	13'-0"	10	12'-6"	-	-	-	-	1	1'-0"	3	3'-9"	4	8'-5"	3'-6"	0'-4½"	10'-4"	5'-5"	0'-4½"	4	8'-5"	3'-8"	0'-5⅝"
I	9	9'-0"	11	13'-9"	6	4'-6"	-	-	2	1'-6"	3	3'-9"	4	6'-11"	3'-7"	0'-4⅜"	8'-9"	5'-6"	0'-4⅜"	4	8'-11"	3'-10"	0'-5½"
J	9	9'-0"	12	15'-0"	7	5'-3"	-	-	2	2'-0"	3	3'-9"	4	7'-1"	3'-8"	0'-4½"	8'-11"	5'-7"	0'-4½"	4	9'-5"	3'-9"	0'-5⅝"
K	10	10'-0"	13	16'-3"	7	5'-3"	-	-	1	1'-3"	4	5'-0"	4	7'-7"	3'-11"	0'-4⅜"	9'-6"	5'-10"	0'-4⅜"	4	9'-11"	3'-11"	0'-5½"
L	10	10'-0"	14	17'-6"	8	6'-0"	-	-	2	1'-9"	4	5'-0"	4	7'-9"	4'-0"	0'-4½"	9'-8"	5'-11"	0'-4½"	4	10'-5"	3'-10"	0'-5⅝"
M	11	11'-0"	14	17'-6"	8	6'-0"	-	-	2	2'-3"	4	5'-0"	4	8'-4"	4'-3"	0'-4⅜"	10'-3"	6'-2"	0'-4⅜"	4	10'-11"	4'-5"	0'-5½"
N	11	11'-0"	14	17'-6"	8	6'-0"	-	-	3	2'-9"	4	5'-0"	5	8'-10"	4'-9"	0'-4⅜"	10'-9"	6'-8"	0'-4⅜"	4	11'-5"	4'-11"	0'-5½"
O	12	12'-0"	15	18'-9"	8	6'-0"	-	-	2	2'-0"	5	6'-3"	5	9'-3"	4'-9"	0'-4½"	11'-3"	6'-8"	0'-4½"	4	11'-11"	4'-10"	0'-5⅝"
P	12	12'-0"	16	20'-0"	10	7'-6"	-	-	2	2'-6"	5	6'-3"	5	9'-3"	4'-10"	0'-4⅜"	11'-3"	6'-9"	0'-4⅜"	4	12'-5"	5'-0"	0'-5½"
Q	13	13'-0"	17	21'-3"	10	7'-6"	-	-	3	3'-0"	5	6'-3"	5	9'-9"	4'-10"	0'-4½"	11'-8"	6'-9"	0'-4½"	4	12'-11"	4'-11"	0'-5⅝"
R	10	10'-0"	18	22'-6"	9	6'-9"	8	4'-0"	3	3'-6"	5	6'-3"	5	8'-9"	5'-1"	0'-4⅜"	10'-9"	7'-0"	0'-4⅜"	4	13'-5"	5'-1"	0'-5½"
S	11	11'-0"	18	22'-6"	9	6'-9"	8	4'-0"	3	2'-9"	6	7'-6"	5	9'-3"	5'-1"	0'-4½"	11'-2"	7'-0"	0'-4½"	4	13'-11"	5'-5"	0'-5⅝"
T	12	12'-0"	19	23'-9"	9	6'-9"	8	4'-0"	3	3'-3"	6	7'-6"	5	9'-9"	5'-4"	0'-4⅜"	11'-9"	7'-3"	0'-4⅜"	4	14'-5"	5'-7"	0'-5½"
U	12	12'-0"	20	25'-0"	9	6'-9"	10	5'-0"	3	3'-9"	6	7'-6"	5	9'-10"	5'-4"	0'-4½"	11'-9"	7'-3"	0'-4½"	4	14'-11"	5'-6"	0'-5⅝"
V	10	10'-0"	21	26'-3"	13	9'-9"	10	5'-0"	3	3'-0"	7	8'-9"	5	9'-3"	5'-7"	0'-4⅜"	11'-3"	7'-6"	0'-4⅜"	4	15'-5"	5'-8"	0'-5½"
W	11	11'-0"	22	27'-6"	13	9'-9"	10	5'-0"	3	3'-6"	7	8'-9"	5	9'-9"	5'-7"	0'-4½"	11'-8"	7'-6"	0'-4½"	4	15'-11"	5'-7"	0'-5⅝"
X	11	11'-0"	22	27'-6"	13	9'-9"	12	6'-0"	4	4'-0"	7	8'-9"	5	10'-2"	6'-1"	0'-4⅜"	12'-1"	8'-0"	0'-4⅜"	4	16'-8"	6'-5"	0'-5½"
Y	10	10'-0"	23	28'-9"	17	12'-9"	10	5'-0"	3	3'-3"	8	10'-0"	5	10'-1"	6'-4"	0'-4½"	12'-0"	8'-3"	0'-4½"	4	17'-5"	6'-7"	0'-5⅝"
Z	10	10'-0"	24	30'-0"	17	12'-9"	12	6'-0"	3	3'-9"	8	10'-0"	5	10'-4"	6'-7"	0'-4⅜"	12'-3"	8'-6"	0'-4⅜"	4	17'-11"	6'-9"	0'-5½"
AA	11	11'-0"	25	31'-3"	17	12'-9"	12	6'-0"	4	4'-3"	8	10'-0"	5	10'-9"	6'-7"	0'-4½"	12'-8"	8'-6"	0'-4½"	4	18'-5"	6'-8"	0'-5⅝"
BB	12	12'-0"	26	32'-6"	17	12'-9"	12	6'-0"	4	4'-9"	8	10'-0"	6	11'-3"	6'-10"	0'-4⅜"	13'-4"	8'-10"	0'-4⅜"	4	18'-11"	6'-10"	0'-5½"
CC	13	13'-0"	26	32'-6"	17	12'-9"	12	6'-0"	4	4'-0"	9	11'-3"	6	11'-9"	6'-10"	0'-4½"	13'-9"	8'-10"	0'-4½"	4	19'-5"	7'-2"	0'-5⅝"
DD	12	12'-0"	27	33'-9"	17	12'-9"	16	8'-0"	4	4'-6"	9	11'-3"	6	12'-1"	7'-7"	0'-4⅜"	14'-1"	9'-7"	0'-4⅜"	4	20'-5"	7'-10"	0'-5½"
EE	12	12'-0"	28	35'-0"	17	12'-9"	18	9'-0"	4	5'-0"	9	11'-3"	6	12'-1"	7'-7"	0'-4½"	14'-1"	9'-7"	0'-4½"	4	20'-11"	7'-9"	0'-5⅝"

A COPY OF THE ORIGINAL SEALED AND SIGNED DRAWING IS ON FILE IN THE CENTRAL OFFICE

VDOT
ROAD AND BRIDGE STANDARDS

SHEET 7 OF 8 | REVISION DATE
1007.07 | 07/12

WING DETAILS

2:1 FILL SLOPE - TYPE I

VIRGINIA DEPARTMENT OF TRANSPORTATION

SPECIFICATION REFERENCE

BCW-21

WING	WV3							WV4							WH1			WH2					WH3	
	SIZE	a			LENGTH			SIZE	a			LENGTH			SIZE	LENGTH	• Ea	SIZE	LENGTH			• EA	SIZE	LENGTH
		FROM	TO	VARY BY	FROM	TO	VARY BY		FROM	TO	VARY BY	FROM	TO	VARY BY					FROM	TO	VARY BY			
A	-	-	-	-	-	-	-	-	-	-	-	-	-	_	4	6'-6"	2	4	6'-0"	2'-7"	3'-4⅛"	2	4	6'-11"
B	-	-	-	-	-	-	-	-	-	-	-	-	-	_	4	7'-6"	2	4	5'-9"	2'-6"	3'-2½"	2	4	8'-1"
C	-	-	-	-	-	-	-	-	-	-	-	-	-	_	4	8'-6"	2	4	6'-0"	2'-7"	3'-4¼"	2	4	9'-1"
D	-	-	-	-	-	-	-	-	-	-	-	-	-	_	4	9'-6"	2	4	9'-1"	2'-6"	3'-3¼"	2	4	10'-1"
E	-	-	-	-	-	-	-	-	-	-	-	-	-	_	4	10'-6"	2	4	9'-4"	2'-7"	3'-4⅛"	2	4	11'-1"
F	-	-	-	-	-	-	-	-	-	-	-	-	-	_	4	11'-6"	2	4	9'-1"	2'-6"	3'-3⅛"	2	4	12'-4"
G	-	-	-	-	-	-	-	-	-	-	-	-	-	_	4	12'-6"	2	4	9'-4"	2'-7"	3'-4¼"	2	4	13'-4"
H	-	-	-	-	-	-	-	-	-	-	-	-	-	_	4	13'-6"	2	4	12'-4"	2'-6"	3'-3⅜"	2	4	14'-4"
I	4	8'-11"	7'-3"	0'-3¼"	10'-10"	9'-2"	0'-3¼"	-	-	-	-	-	-	_	4	14'-6"	2	4	12'-7"	2'-7"	3'-4⅛"	2	4	15'-6"
J	4	9'-5"	7'-5"	0'-3⅜"	11'-4"	9'-4"	0'-3⅜"	-	-	-	-	-	-	_	4	15'-6"	2	4	12'-4"	2'-6"	3'-3⅜"	2	4	16'-6"
K	5	9'-11"	8'-0"	0'-3¼"	11'-10"	9'-11"	0'-3¼"	-	-	-	-	-	-	_	4	16'-6"	2	4	16'-0"	2'-7"	3'-4⅛"	2	4	17'-6"
L	5	10'-5"	8'-2"	0'-3⅜"	12'-4"	10'-1"	0'-3⅜"	-	-	-	-	-	-	_	4	17'-6"	2	4	15'-9"	2'-7"	3'-3½"	2	4	18'-9"
M	6	10'-11"	8'-8"	0'-3¼"	12'-11"	10'-9"	0'-3¼"	-	-	-	-	-	-	_	4	18'-6"	2	4	16'-0"	2'-7"	3'-4⅛"	2	4	19'-9"
N	6	11'-5"	9'-2"	0'-3¼"	13'-5"	11'-3"	0'-3¼"	-	-	-	-	-	-	_	4	18'-6"	2	4	16'-0"	2'-7"	3'-4⅛"	2	4	19'-9"
O	6	11'-11"	9'-8"	0'-3⅜"	13'-11"	11'-8"	0'-3⅜"	-	-	-	-	-	-	_	4	19'-6"	2	4	19'-0"	2'-6"	3'-3⅝"	2	4	20'-9"
P	6	12'-5"	9'-8"	0'-3¼"	14'-5"	11'-8"	0'-3¼"	-	-	-	-	-	-	_	4	20'-6"	2	4	19'-3"	2'-7"	3'-4⅛"	2	4	21'-11"
Q	7	12'-11"	10'-1"	0'-3⅜"	15'-0"	12'-3"	0'-3⅜"	-	-	-	-	-	-	-	4	21'-6"	2	4	19'-0"	2'-6"	3'-3⅝"	2	4	23'-0"
R	6	11'-8"	9'-2"	0'-3¼"	13'-8"	11'-2"	0'-3¼"	6	13'-5"	11'-11"	0'-2⅛"	15'-5"	14'-0"	0'-2⅛"	4	22'-6"	2	4	19'-3"	2'-7"	3'-4⅛"	2	4	24'-0"
S	6	12'-2"	9'-7"	0'-3⅜"	14'-2"	11'-7"	0'-3⅜"	6	13'-11"	12'-5"	0'-2¼"	15'-11"	14'-5"	0'-2¼"	4	23'-6"	2	4	22'-5"	2'-7"	3'-3⅝"	2	4	25'-2"
T	6	12'-8"	10'-2"	0'-3¼"	14'-8"	12'-2"	0'-3¼"	6	14'-5"	12'-11"	0'-2⅛"	16'-5"	15'-0"	0'-2⅛"	4	24'-6"	2	4	22'-8"	2'-7"	3'-4⅛"	2	4	26'-2"
U	7	12'-9"	10'-3"	0'-3⅜"	14'-10"	12'-4"	0'-3⅜"	7	14'-11"	13'-0"	0'-2¼"	17'-0"	15'-2"	0'-2¼"	4	25'-6"	2	4	22'-5"	2'-7"	3'-3⅝"	2	4	27'-3"
V	7	13'-3"	9'-8"	0'-3¼"	15'-5"	11'-9"	0'-3¼"	7	15'-5"	13'-7"	0'-2⅛"	17'-6"	15'-8"	0'-2⅛"	4	26'-6"	2	4	26'-0"	2'-7"	3'-4⅛"	2	4	28'-3"
W	7	13'-9"	10'-1"	0'-3⅜"	15'-10"	12'-2"	0'-3⅜"	7	15'-11"	14'-0"	0'-2¼"	18'-0"	16'-2"	0'-2¼"	4	27'-6"	2	4	25'-9"	2'-6"	3'-3¾"	2	4	29'-5"
X	7	14'-2"	10'-6"	0'-3¼"	16'-3"	12'-8"	0'-3¼"	7	16'-8"	14'-5"	0'-2⅛"	18'-9"	16'-7"	0'-2⅛"	4	28'-6"	2	4	26'-0"	2'-7"	3'-4⅛"	2	4	30'-5"
Y	7	15'-3"	10'-6"	0'-3⅜"	17'-4"	12'-7"	0'-3⅜"	7	17'-5"	15'-6"	0'-2¼"	19'-6"	17'-8"	0'-2¼"	4	29'-6"	2	4	29'-0"	2'-7"	3'-3¾"	2	4	31'-6"
Z	7	15'-5"	10'-8"	0'-3¼"	17'-6"	12'-9"	0'-3¼"	7	17'-11"	15'-8"	0'-2⅛"	20'-0"	17'-10"	0'-2⅛"	4	30'-6"	2	4	29'-3"	2'-7"	3'-4⅛"	2	4	32'-7"
AA	7	15'-11"	11'-1"	0'-3⅜"	18'-0"	13'-2"	0'-3⅜"	7	18'-5"	16'-2"	0'-2¼"	20'-6"	18'-3"	0'-2¼"	4	31'-6"	2	4	29'-0"	2'-7"	3'-3¾"	2	4	33'-7"
BB	8	16'-5"	11'-8"	0'-3¼"	18'-7"	13'-10"	0'-3¼"	8	18'-11"	16'-8"	0'-2⅛"	21'-1"	18'-11"	0'-2⅛"	4	32'-6"	2	4	29'-3"	2'-7"	3'-4⅛"	2	4	34'-7"
CC	8	16'-11"	12'-1"	0'-3⅜"	19'-1"	14'-4"	0'-3⅜"	8	19'-5"	17'-2"	0'-2¼"	21'-7"	19'-4"	0'-2¼"	4	33'-6"	2	4	32'-4"	2'-7"	3'-3¾"	2	4	35'-10"
DD	8	17'-2"	12'-5"	0'-3¼"	19'-4"	14'-7"	0'-3¼"	8	20'-5"	17'-5"	0'-2⅛"	22'-7"	19'-8"	0'-2⅛"	4	34'-6"	2	4	32'-7"	2'-8"	3'-4"	2	4	36'-10"
EE	8	17'-3"	12'-6"	0'-3⅜"	19'-6"	14'-8"	0'-3⅜"	9	20'-11"	17'-6"	0'-2¼"	23'-4"	20'-0"	0'-2¼"	4	35'-6"	2	4	32'-4"	2'-7"	3'-3¾"	2	4	37'-11"

A COPY OF THE ORIGINAL SEALED AND SIGNED DRAWING IS ON FILE IN THE CENTRAL OFFICE

SPECIFICATION REFERENCE

WING DETAILS

2:1 FILL SLOPE - TYPE I

VIRGINIA DEPARTMENT OF TRANSPORTATION

VDOT

ROAD AND BRIDGE STANDARDS

REVISION DATE 07/12

SHEET 8 OF 8

1007.08

BCW-22

GENERAL NOTES

Specifications:

AASHTO LRFD Bridge Design Specifications 5th Edition 2010; 2011 Interim Revisions; and VDOT Modifications

Limits of validity for Standard Wingwall design

The standard wingwall designs are based on the following assumptions:

there is no structural connection between the wall and the box culvert
traffic surcharge loading is neglected.

Backfill

Backfill shall comprise granular material with an internal friction angle Φ′ of at least 32 °. Cohesive backfill shall not be permitted. Compaction of the backfill material within a distance of one-half the height of the wall shall be by hand compactors only.

Drainage

The Contractor shall provide the drainage system indicated on Sheet 2.

The cost for the drainage system (including porous backfill, 6" diameter non-rigid tubing and other items required) shall be incidental to the cost bid for Concrete.

Concrete

All concrete shall be Class A4.

Reinforcement

Deformed reinforcing bars shall conform to ASTM A615, Grade 60. All reinforcing bar dimensions on the detailed drawings are to centers of bars except where otherwise noted and are subject to fabrication and construction tolerances.

Dimensions on bar diagrams are out-to-out of bars. Bars are straight unless otherwise shown.

The concrete cover to the outermost reinforcement bars shall be as follows:

Wall footing (all faces) 3" minimum cover
Wall stem (all faces) 2½" minimum cover

At the Contractor's option WV Series bars may be spliced at top of the footing in order to facilitate construction. Splice lengths shall be in accordance with Table C on Sheet 2. No additional compensation shall be provided for the increase in reinforcing steel quantity due to the splices.

Miscellaneous

Weepholes shall be placed at the lowest point feasible for free drainage away from the wing.

Four Type I Wings are to be used for straight crossings and skews up to 20°. Two Type I and two Type II Wings are to be used for skews from 25° to 45°. For skews above 45°, special design wings are required. The wingwall to be used for each culvert is shown on the BC series sheets.

The designs shown are applicable for a 45° skew with the roadway and other conditions indicated. Any change in these conditions invalidates these designs.

Quantities shown are for one wing.

WING	Wall Quantities		qr_min ksf High End	qr_min ksf Low End
	Concrete CY	Reinforcement LB		
A	2.9	253	0.91	0.41
B	3.5	309	1.05	0.41
C	3.9	334	1.21	0.41
D	4.6	371	1.40	0.41
E	5.5	434	1.49	0.41
F	6.2	472	1.71	0.41
G	7.1	550	1.79	0.41
H	7.9	590	2.03	0.41
I	8.8	661	2.10	0.41
J	9.7	742	2.36	0.41
K	10.9	856	2.43	0.41
L	11.8	950	2.70	0.41
M	13.1	1124	2.76	0.41
N	14.1	1241	3.05	0.41
O	15.3	1350	3.10	0.41
P	16.8	1508	3.17	0.41
Q	17.9	1773	3.45	0.41
R	19.1	1812	3.76	0.41
S	20.8	2030	3.80	0.41
T	22.0	2223	4.13	0.41
U	23.5	2475	4.16	0.41
V	25.3	2682	4.21	0.41
W	29.2	3124	4.43	0.44
X	34.5	3479	4.85	0.48
Y	36.3	3853	5.19	0.48
Z	38.8	4162	5.23	0.48
AA	41.0	4469	5.28	0.48
BB	42.9	4902	5.61	0.48
CC	46.6	5345	5.40	0.48
DD	50.5	5863	5.28	0.48
EE	52.5	6610	5.55	0.48

A COPY OF THE ORIGINAL SEALED AND SIGNED DRAWING IS ON FILE IN THE CENTRAL OFFICE

VDOT
ROAD AND BRIDGE STANDARDS

SHEET 1 OF 8 | REVISION DATE
1007.09 | 07/12

WING DETAIL

2:1 FILL SLOPE - TYPE II

VIRGINIA DEPARTMENT OF TRANSPORTATION

SPECIFICATION REFERENCE

BCW-22

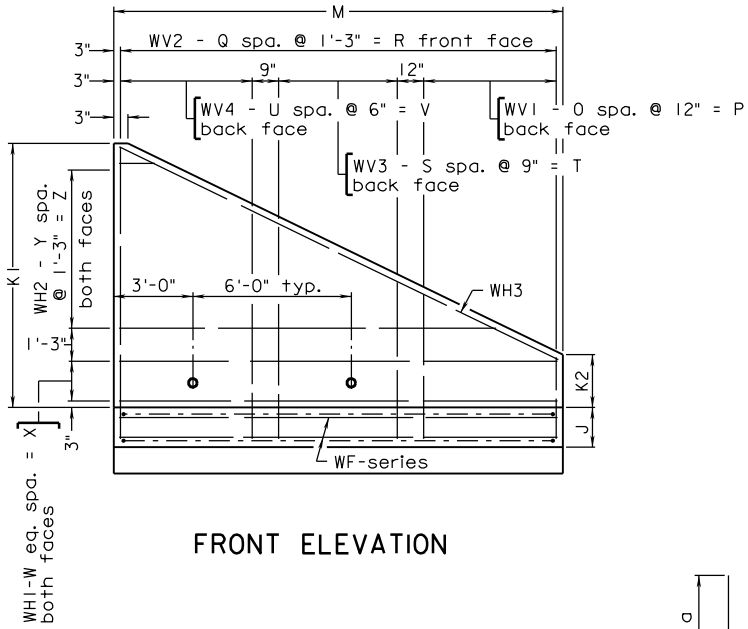

FRONT ELEVATION

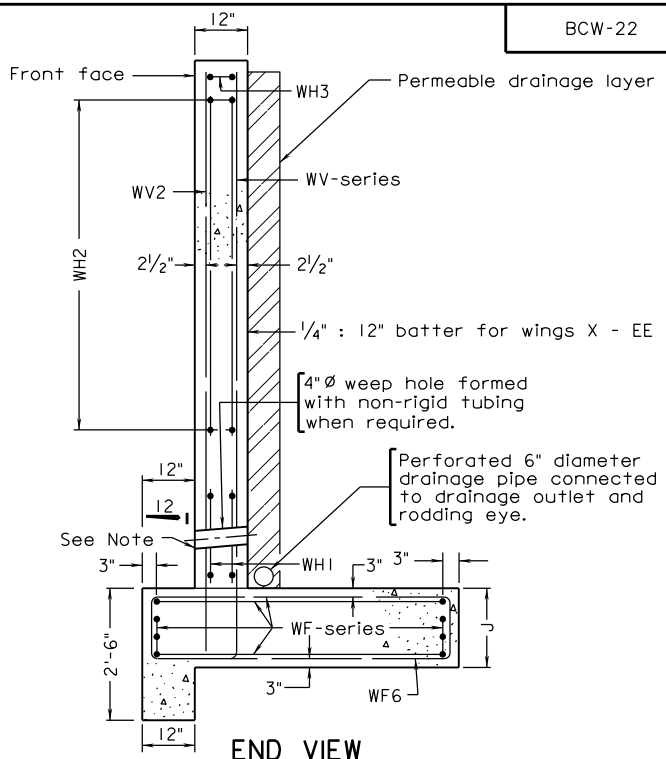

END VIEW

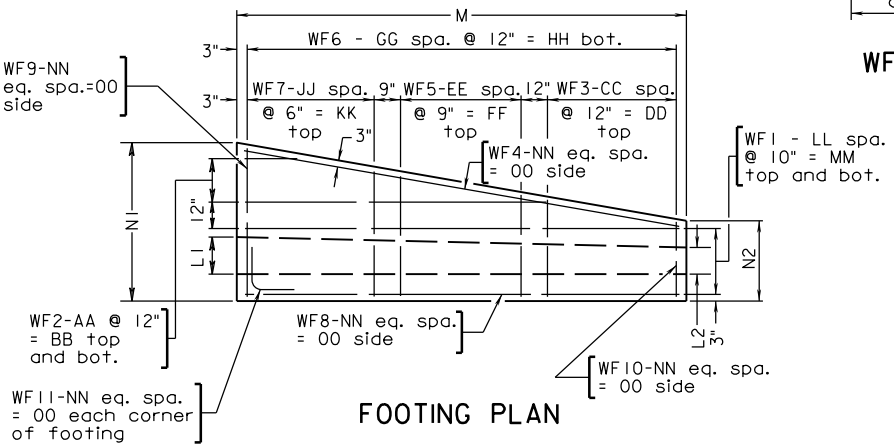

FOOTING PLAN

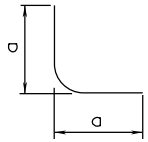

WF11

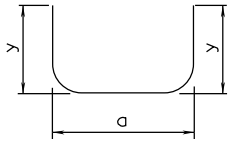

WF1 TO WF3, WF5 TO WF7

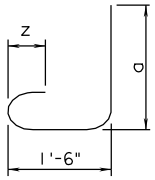

WV1, WV3, WV4

TABLE A	
Wall	y
A-W	9½"
X	1'-0½"
Y-CC	1'-3½"
DD-EE	1'-9½"

TABLE B		
Bar Size	Pin Dia.	Z
#3	2¼"	4"
#4	3"	4½"
#5	3¾"	5"
#6	4½"	6"
#7	5¼"	7"
#8	6"	8"
#9	9"	10⅛"

TABLE C	
Bar Size	Splice Length
#4	1'- 9"
#5	2'- 4"
#6	2'- 7"
#7	3'- 3"
#8	4'- 2"
#9	5'- 4"

A COPY OF THE ORIGINAL SEALED AND SIGNED DRAWING AND DESIGN STATEMENT IS ON FILE IN THE CENTRAL OFFICE.

SPECIFICATION REFERENCE

WING DETAIL

2:1 FILL SLOPE - TYPE II

VIRGINIA DEPARTMENT OF TRANSPORTATION

VDOT
ROAD AND BRIDGE STANDARDS

REVISION DATE 07/16

SHEET 2 OF 8

1007.10

BCW-22

WING	J	K1	K2	L1	L2	M	N1	N2	NO. WEEP HOLES	FOOTING BAR SPACINGS													
										WF1		WF2		WF3		WF4, WF8 TO WF10		WF5		WF6		WF7	
										LL	MM	AA	BB	CC	DD	NN	OO	EE	FF	GG	HH	JJ	KK
A	1'-6"	4'-0"	1'-0"	1'-0"	1'-0"	9'-0"	4'-0"	3'-0"	-	3	2'-6"	-	-	8	8'-0"	1	0'-8"	-	-	8	8'-0"	-	-
B	1'-6"	4'-6"	1'-0"	1'-0"	1'-0"	10'-6"	4'-0"	3'-0"	-	3	2'-6"	-	-	10	10'-0"	1	0'-8"	-	-	10	10'-0"	-	-
C	1'-6"	5'-0"	1'-0"	1'-0"	1'-0"	11'-6"	4'-0"	3'-0"	-	3	2'-6"	-	-	11	11'-0"	1	0'-8"	-	-	11	11'-0"	-	-
D	1'-6"	5'-6"	1'-0"	1'-0"	1'-0"	13'-0"	4'-0"	3'-0"	-	3	2'-6"	-	-	12	12'-0"	1	0'-8"	-	-	12	12'-0"	-	-
E	1'-6"	6'-0"	1'-0"	1'-0"	1'-0"	14'-6"	4'-6"	3'-0"	-	3	2'-6"	-	-	14	14'-0"	1	0'-8"	-	-	14	14'-0"	-	-
F	1'-6"	6'-6"	1'-0"	1'-0"	1'-0"	16'-0"	4'-6"	3'-0"	-	3	2'-6"	-	-	15	15'-0"	1	0'-8"	-	-	15	15'-0"	-	-
G	1'-6"	7'-0"	1'-0"	1'-0"	1'-0"	17'-6"	5'-0"	3'-0"	-	3	2'-6"	-	-	17	17'-0"	1	0'-8"	-	-	17	17'-0"	-	-
H	1'-6"	7'-6"	1'-0"	1'-0"	1'-0"	19'-0"	5'-0"	3'-0"	-	3	2'-6"	-	-	18	18'-0"	1	0'-8"	-	-	18	18'-0"	-	-
I	1'-6"	8'-0"	1'-0"	1'-0"	1'-0"	20'-0"	5'-6"	3'-0"	-	3	2'-6"	1	1'-0"	12	12'-0"	1	0'-8"	8	6'-0"	19	19'-0"	-	-
J	1'-6"	8'-6"	1'-0"	1'-0"	1'-0"	21'-6"	5'-6"	3'-0"	-	3	2'-6"	1	1'-0"	12	12'-0"	1	0'-8"	10	7'-6"	21	21'-0"	-	-
K	1'-6"	9'-0"	1'-0"	1'-0"	1'-0"	23'-0"	6'-0"	3'-0"	-	3	2'-6"	1	1'-0"	13	13'-0"	1	0'-8"	11	8'-3"	22	22'-0"	-	-
L	1'-6"	9'-6"	1'-0"	1'-0"	1'-0"	24'-6"	6'-0"	3'-0"	-	3	2'-6"	1	1'-0"	14	14'-0"	1	0'-8"	12	9'-0"	24	24'-0"	-	-
M	1'-6"	10'-0"	1'-0"	1'-0"	1'-0"	26'-0"	6'-6"	3'-0"	2	3	2'-6"	2	2'-0"	15	15'-0"	1	0'-8"	12	9'-0"	25	25'-0"	-	-
N	1'-6"	10'-6"	1'-0"	1'-0"	1'-0"	27'-6"	6'-6"	3'-0"	2	3	2'-6"	2	2'-0"	16	16'-0"	1	0'-8"	13	9'-9"	27	27'-0"	-	-
O	1'-6"	11'-0"	1'-0"	1'-0"	1'-0"	28'-6"	7'-0"	3'-0"	2	3	2'-6"	2	2'-0"	17	17'-0"	1	0'-8"	13	9'-9"	28	28'-0"	-	-
P	1'-6"	11'-6"	1'-0"	1'-0"	1'-0"	30'-0"	7'-6"	3'-0"	3	3	2'-6"	3	3'-0"	18	18'-0"	1	0'-8"	14	10'-6"	29	29'-0"	-	-
Q	1'-6"	12'-0"	1'-0"	1'-0"	1'-0"	31'-6"	7'-6"	3'-0"	3	3	2'-6"	3	3'-0"	18	18'-0"	1	0'-8"	16	12'-0"	31	31'-0"	-	-
R	1'-6"	12'-6"	1'-0"	1'-0"	1'-0"	33'-0"	7'-6"	3'-0"	3	3	2'-6"	3	3'-0"	15	15'-0"	1	0'-8"	13	9'-9"	32	32'-0"	12	6'-0"
S	1'-6"	13'-0"	1'-0"	1'-0"	1'-0"	34'-6"	8'-0"	3'-0"	3	3	2'-6"	3	3'-0"	15	15'-0"	1	0'-8"	13	9'-9"	34	34'-0"	15	7'-6"
T	1'-6"	13'-6"	1'-0"	1'-0"	1'-0"	36'-0"	8'-0"	3'-0"	4	3	2'-6"	3	3'-0"	14	14'-0"	1	0'-8"	15	11'-3"	35	35'-0"	17	8'-6"
U	1'-6"	14'-0"	1'-0"	1'-0"	1'-0"	37'-0"	8'-6"	3'-0"	4	3	2'-6"	4	4'-0"	14	14'-0"	1	0'-8"	17	12'-9"	36	36'-0"	16	8'-0"
V	1'-6"	14'-6"	1'-0"	1'-0"	1'-0"	38'-6"	9'-0"	3'-0"	4	3	2'-6"	4	4'-0"	15	15'-0"	1	0'-8"	17	12'-9"	38	38'-0"	17	8'-6"
W	1'-9"	15'-0"	1'-0"	1'-0"	1'-0"	40'-0"	9'-6"	3'-0"	5	3	2'-6"	5	5'-0"	15	15'-0"	1	0'-11"	19	14'-3"	39	39'-0"	17	8'-6"
X	2'-0"	15'-6"	1'-0"	1'-3 3/4"	1'-0 1/4"	41'-6"	10'-0"	3'-0"	5	3	2'-6"	5	5'-0"	17	17'-0"	2	0'-7"	17	12'-9"	41	41'-0"	19	9'-6"
Y	2'-0"	16'-0"	1'-0"	1'-4"	1'-0 1/4"	43'-0"	10'-0"	3'-0"	5	3	2'-6"	5	5'-0"	20	20'-0"	2	0'-7"	15	11'-3"	42	42'-0"	19	9'-6"
Z	2'-0"	16'-6"	1'-0"	1'-4 1/8"	1'-0 1/4"	44'-6"	10'-6"	3'-0"	5	3	2'-6"	6	6'-0"	20	20'-0"	2	0'-7"	17	12'-9"	44	44'-0"	19	9'-6"
AA	2'-0"	17'-0"	1'-0"	1'-4 1/4"	1'-0 1/4"	45'-6"	11'-0"	3'-0"	6	3	2'-6"	6	6'-0"	19	19'-0"	2	0'-7"	19	14'-3"	45	45'-0"	20	10'-0"
BB	2'-0"	17'-6"	1'-0"	1'-4 3/8"	1'-0 1/4"	47'-0"	11'-0"	3'-0"	6	3	2'-6"	6	6'-0"	20	20'-0"	2	0'-7"	19	14'-3"	46	46'-0"	21	10'-6"
CC	2'-0"	18'-0"	1'-0"	1'-4 1/2"	1'-0 1/4"	48'-6"	12'-0"	3'-0"	6	3	2'-6"	7	7'-0"	19	19'-0"	2	0'-7"	21	15'-9"	48	48'-0"	23	11'-6"
DD	2'-0"	18'-6"	1'-0"	1'-4 5/8"	1'-0 1/4"	50'-0"	13'-0"	3'-0"	7	3	2'-6"	8	8'-0"	18	18'-0"	2	0'-7"	23	17'-3"	49	49'-0"	25	12'-6"
EE	2'-0"	19'-0"	1'-0"	1'-4 3/4"	1'-0 1/4"	51'-6"	13'-0"	3'-0"	7	3	2'-6"	8	8'-0"	18	18'-0"	2	0'-7"	25	18'-9"	51	51'-0"	25	12'-6"

A COPY OF THE ORIGINAL SEALED AND SIGNED DRAWING IS ON FILE IN THE CENTRAL OFFICE

VDOT
ROAD AND BRIDGE STANDARDS

SHEET 3 OF 8 | REVISION DATE
1007.11 | 07/12

WING DETAILS

2:1 FILL SLOPE - TYPE II

VIRGINIA DEPARTMENT OF TRANSPORTATION

SPECIFICATION REFERENCE

BCW-22

WING	WF1				WF2								WF3						
	SIZE	a	LENGTH	* Ea	SIZE	a			LENGTH			* Ea	SIZE	a			LENGTH		
						FROM	TO	VARY BY	FROM	TO	VARY BY			FROM	TO	VARY BY	FROM	TO	VARY BY
A	4	8'-4"	9'-9"	2	4	1'-8"	10'-8"	-	3'-0"	12'-0"	-	2	4	3'-5"	2'-6"	0'-1¼"	4'-9"	3'-11"	0'-1¼"
B	4	9'-11"	11'-3"	2	4	2'-0"	12'-6"	-	3'-5"	13'-11"	-	2	4	3'-5"	2'-5"	0'-1⅛"	4'-9"	3'-10"	0'-1⅛"
C	4	10'-11"	12'-3"	2	4	2'-3"	13'-9"	-	3'-8"	15'-2"	-	2	4	3'-5"	2'-5"	0'-1"	4'-9"	3'-10"	0'-1"
D	4	12'-4"	13'-9"	2	4	2'-8"	15'-8"	-	4'-0"	17'-0"	-	2	4	3'-5"	2'-6"	0'-0¾"	4'-9"	3'-10"	0'-0¾"
E	4	13'-11"	15'-3"	2	4	6'-8"	6'-8"	-	8'-0"	8'-0"	-	2	4	3'-11"	2'-5"	0'-1⅛"	5'-3"	3'-10"	0'-1⅛"
F	4	15'-4"	16'-9"	2	4	7'-5"	7'-5"	-	8'-9"	8'-9"	-	2	4	3'-11"	2'-6"	0'-1⅛"	5'-3"	3'-10"	0'-1⅛"
G	4	16'-11"	18'-3"	2	4	10'-4"	10'-4"	-	11'-8"	11'-8"	-	2	4	4'-5"	2'-5"	0'-1⅜"	5'-9"	3'-10"	0'-1⅜"
H	4	18'-5"	19'-9"	2	4	11'-3"	11'-3"	-	12'-8"	12'-8"	-	2	4	4'-5"	2'-6"	0'-1¼"	5'-9"	3'-10"	0'-1¼"
I	4	19'-5"	20'-9"	2	4	13'-5"	5'-5"	8'-0"	14'-9"	6'-9"	8'-0"	2	4	4'-0"	2'-6"	0'-1½"	5'-5"	3'-11"	0'-1½"
J	4	20'-11"	22'-3"	2	4	14'-5"	5'-10"	8'-7⅛"	15'-10"	7'-2"	8'-7⅛"	2	4	3'-11"	2'-6"	0'-1⅜"	5'-3"	3'-11"	0'-1⅜"
K	4	22'-5"	23'-9"	2	4	16'-8"	9'-0"	7'-8"	18'-0"	10'-4"	7'-8"	2	4	4'-2"	2'-6"	0'-1½"	5'-7"	3'-10"	0'-1½"
L	4	23'-11"	25'-3"	2	4	17'-9"	9'-7"	8'-2"	19'-2"	11'-0"	8'-2"	2	4	4'-2"	2'-5"	0'-1⅜"	5'-6"	3'-10"	0'-1⅜"
M	4	25'-5"	26'-9"	2	4	19'-10"	4'-11"	7'-5⅛"	21'-2"	6'-4"	7'-5⅛"	2	4	4'-6"	2'-6"	0'-1½"	5'-11"	3'-11"	0'-1½"
N	4	26'-11"	28'-3"	2	4	21'-0"	5'-3"	7'-10¼"	22'-4"	6'-8"	7'-10¼"	2	4	4'-6"	2'-6"	0'-1½"	5'-11"	3'-10"	0'-1½"
O	4	27'-11"	29'-3"	2	4	22'-6"	8'-3"	7'-1½"	23'-11"	9'-8"	7'-1½"	2	4	4'-10"	2'-6"	0'-1⅝"	6'-3"	3'-10"	0'-1⅝"
P	4	29'-5"	30'-9"	2	4	24'-5"	4'-5"	6'-8"	25'-9"	5'-9"	6'-8"	2	4	5'-2"	2'-5"	0'-1¾"	6'-6"	3'-10"	0'-1¾"
Q	4	30'-11"	32'-3"	2	4	25'-8"	4'-8"	7'-0"	27'-0"	6'-0"	7'-0"	2	4	5'-0"	2'-5"	0'-1⅝"	6'-5"	3'-10"	0'-1⅝"
R	4	32'-4"	33'-9"	2	4	26'-11"	4'-11"	7'-4"	28'-3"	6'-3"	7'-4"	2	4	4'-6"	2'-5"	0'-1⅝"	5'-10"	3'-10"	0'-1⅝"
S	4	33'-11"	35'-3"	2	4	28'-8"	8'-0"	6'-10¾"	30'-1"	9'-5"	6'-10¾"	2	4	4'-8"	2'-5"	0'-1⅝"	6'-0"	3'-10"	0'-1⅝"
T	4	35'-4"	36'-9"	2	4	30'-0"	8'-5"	7'-2⅜"	31'-4"	9'-9"	7'-2¼"	2	4	4'-5"	2'-5"	0'-1⅝"	5'-9"	3'-10"	0'-1⅝"
U	4	36'-4"	37'-9"	2	4	31'-4"	4'-5"	6'-8⅝"	32'-8"	5'-10"	6'-8⅝"	2	4	4'-6"	2'-5"	0'-1¾"	5'-11"	3'-10"	0'-1¾"
V	4	37'-11"	39'-3"	2	4	33'-1"	7'-5"	6'-5"	34'-5"	8'-9"	6'-5"	2	4	4'-10"	2'-5"	0'-1¾"	6'-2"	3'-10"	0'-1¾"
W	4	39'-4"	41'-3"	2	5	34'-9"	4'-0"	6'-1¾"	36'-7"	5'-10"	6'-1¾"	2	4	4'-11"	2'-5"	0'-1¾"	6'-9"	4'-4"	0'-1¾"
X	4	40'-11"	43'-3"	2	5	36'-5"	6'-9"	5'-11⅛"	38'-9"	9'-1"	6'-11⅛"	2	4	5'-4"	2'-6"	0'-2"	7'-8"	4'-10"	0'-2"
Y	4	42'-4"	44'-9"	2	5	37'-9"	7'-1"	6'-1⅝"	40'-1"	9'-5"	6'-1⅝"	2	4	5'-9"	2'-5"	0'-1¾"	8'-1"	4'-10"	0'-1¾"
Z	4	43'-11"	46'-3"	2	5	39'-5"	3'-10"	5'-11⅛"	41'-9"	6'-2"	5'-11⅛"	2	4	5'-10"	2'-6"	0'-2"	8'-2"	4'-10"	0'-2"
AA	4	44'-11"	47'-3"	2	5	40'-7"	6'-6"	5'-8¼"	42'-11"	8'-10"	5'-8¼"	2	4	5'-10"	2'-6"	0'-2"	8'-2"	4'-10"	0'-2"
BB	4	46'-4"	48'-9"	2	5	42'-0"	6'-9"	5'-10½"	44'-4"	9'-1"	5'-10½"	2	4	5'-10"	2'-6"	0'-2"	8'-3"	4'-10"	0'-2"
CC	4	47'-11"	50'-3"	2	5	43'-10"	6'-1"	5'-4⅝"	46'-2"	8'-5"	5'-4⅝"	2	4	6'-0"	2'-6"	0'-2⅛"	8'-4"	4'-10"	0'-2⅛"
DD	4	49'-4"	51'-9"	2	5	45'-8"	5'-8"	5'-0"	47'-11"	7'-11"	5'-0"	2	4	6'-1"	2'-6"	0'-2⅜"	8'-5"	4'-10"	0'-2⅜"
EE	4	50'-11"	53'-3"	2	5	47'-0"	5'-10"	5'-1¾"	49'-4"	8'-2"	5'-1¾"	2	4	6'-0"	2'-6"	0'-2¼"	8'-4"	4'-10"	0'-2¼"

A COPY OF THE ORIGINAL SEALED AND SIGNED DRAWING IS ON FILE IN THE CENTRAL OFFICE

SPECIFICATION REFERENCE

WING DETAILS

2:1 FILL SLOPE - TYPE II

VIRGINIA DEPARTMENT OF TRANSPORTATION

VDOT

ROAD AND BRIDGE STANDARDS

REVISION DATE 07/12

SHEET 4 OF 8

1007.12

BCW-22

WING	WF4		WF5							WF6					
	SIZE	LENGTH	SIZE	a			LENGTH			SIZE	a			LENGTH		
				FROM	TO	VARY BY	FROM	TO	VARY BY		FROM	TO	VARY BY	FROM	TO	VARY BY
A	4	8'-2"	-	-	-	-	-	-	-	4	3'-4"	2'-6"	0'-1¼"	4'-9"	3'-10"	0'-1¼"
B	4	9'-8"	-	-	-	-	-	-	-	4	3'-4"	2'-5"	0'-1⅛"	4'-9"	3'-9"	0'-1⅛"
C	4	10'-8"	-	-	-	-	-	-	-	4	3'-4"	2'-5"	0'-1"	4'-9"	3'-9"	0'-1"
D	4	12'-2"	-	-	-	-	-	-	-	4	3'-4"	2'-5"	0'-0¾"	4'-9"	3'-10"	0'-0¾"
E	4	13'-8"	-	-	-	-	-	-	-	4	3'-10"	2'-5"	0'-1⅛"	5'-3"	3'-9"	0'-1⅛"
F	4	15'-2"	-	-	-	-	-	-	-	4	3'-10"	2'-5"	0'-1⅛"	5'-3"	3'-10"	0'-1⅛"
G	4	16'-9"	-	-	-	-	-	-	-	4	4'-4"	2'-5"	0'-1⅜"	5'-9"	3'-9"	0'-1⅜"
H	4	18'-3"	-	-	-	-	-	-	-	4	4'-4"	2'-5"	0'-1¼"	5'-9"	3'-10"	0'-1¼"
I	4	19'-3"	4	4'-11"	4'-2"	0'-1⅛"	6'-3"	5'-6"	0'-1⅛"	4	4'-10"	2'-6"	0'-1½"	6'-3"	3'-10"	0'-1½"
J	4	20'-9"	4	4'-11"	4'-0"	0'-1"	6'-3"	5'-5"	0'-1"	4	4'-10"	2'-5"	0'-1⅜"	6'-3"	3'-9"	0'-1⅜"
K	4	22'-4"	4	5'-5"	4'-4"	0'-1⅛"	6'-9"	5'-8"	0'-1⅛"	4	5'-4"	2'-6"	0'-1½"	6'-9"	3'-10"	0'-1½"
L	4	23'-10"	4	5'-5"	4'-3"	0'-1"	6'-9"	5'-8"	0'-1"	4	5'-4"	2'-5"	0'-1⅜"	6'-9"	3'-9"	0'-1⅜"
M	4	25'-4"	5	5'-11"	4'-8"	0'-1⅛"	7'-2"	6'-0"	0'-1⅛"	4	5'-10"	2'-6"	0'-1½"	7'-3"	3'-10"	0'-1½"
N	4	26'-10"	5	5'-11"	4'-8"	0'-1⅛"	7'-2"	6'-0"	0'-1⅛"	4	5'-10"	2'-5"	0'-1½"	7'-3"	3'-9"	0'-1½"
O	4	27'-11"	5	6'-5"	5'-0"	0'-1¼"	7'-8"	6'-4"	0'-1¼"	4	6'-4"	2'-5"	0'-1⅝"	7'-9"	3'-9"	0'-1⅝"
P	4	29'-6"	6	6'-11"	5'-4"	0'-1¼"	8'-2"	6'-7"	0'-1¼"	4	6'-10"	2'-6"	0'-1¾"	8'-3"	3'-10"	0'-1¾"
Q	4	30'-11"	6	6'-11"	5'-2"	0'-1¼"	8'-2"	6'-5"	0'-1¼"	4	6'-10"	2'-5"	0'-1⅝"	8'-3"	3'-9"	0'-1⅝"
R	4	32'-5"	5	6'-0"	4'-8"	0'-1⅛"	7'-3"	5'-11"	0'-1⅛"	4	6'-10"	2'-6"	0'-1⅝"	8'-3"	3'-10"	0'-1⅝"
S	4	34'-0"	5	6'-2"	4'-9"	0'-1¼"	7'-6"	6'-1"	0'-1¼"	4	7'-4"	2'-5"	0'-1⅝"	8'-9"	3'-9"	0'-1⅝"
T	4	35'-6"	5	6'-1"	4'-6"	0'-1⅛"	7'-5"	5'-10"	0'-1⅛"	4	7'-4"	2'-6"	0'-1⅝"	8'-9"	3'-10"	0'-1⅝"
U	4	36'-6"	5	6'-7"	4'-8"	0'-1¼"	7'-11"	6'-0"	0'-1¼"	4	7'-10"	2'-6"	0'-1¾"	9'-3"	3'-10"	0'-1¾"
V	4	38'-1"	5	6'-11"	4'-11"	0'-1⅜"	8'-3"	6'-3"	0'-1⅜"	4	8'-4"	2'-5"	0'-1¾"	9'-9"	3'-9"	0'-1¾"
W	4	39'-8"	5	7'-4"	5'-1"	0'-1⅜"	9'-2"	6'-11"	0'-1⅜"	5	8'-10"	2'-6"	0'-1¾"	10'-8"	4'-4"	0'-1¾"
X	4	41'-3"	5	7'-8"	5'-6"	0'-1½"	10'-0"	7'-10"	0'-1½"	5	9'-4"	2'-5"	0'-2"	11'-8"	4'-9"	0'-2"
Y	4	42'-8"	5	7'-8"	5'-11"	0'-1⅜"	10'-0"	8'-2"	0'-1⅜"	5	9'-4"	2'-6"	0'-1¾"	11'-8"	4'-10"	0'-1¾"
Z	4	44'-3"	6	8'-2"	6'-0"	0'-1½"	10'-5"	8'-3"	0'-1½"	5	9'-10"	2'-5"	0'-2"	12'-2"	4'-9"	0'-2"
AA	4	45'-4"	6	8'-6"	6'-0"	0'-1½"	10'-9"	8'-3"	0'-1½"	5	10'-4"	2'-5"	0'-2"	12'-8"	4'-9"	0'-2"
BB	4	46'-10"	6	8'-6"	6'-0"	0'-1½"	10'-9"	8'-4"	0'-1½"	5	10'-4"	2'-6"	0'-2"	12'-8"	4'-10"	0'-2"
CC	4	48'-6"	6	9'-1"	6'-2"	0'-1⅝"	11'-4"	8'-5"	0'-1⅝"	5	11'-4"	2'-5"	0'-2⅛"	13'-8"	4'-9"	0'-2⅛"
DD	4	50'-2"	6	9'-9"	6'-3"	0'-1¾"	12'-0"	8'-6"	0'-1¾"	5	12'-4"	2'-6"	0'-2⅜"	14'-8"	4'-10"	0'-2⅜"
EE	4	51'-7"	7	9'-10"	6'-2"	0'-1⅝"	12'-0"	8'-4"	0'-1⅝"	5	12'-4"	2'-5"	0'-2¼"	14'-8"	4'-9"	0'-2¼"

A COPY OF THE ORIGINAL SEALED AND SIGNED DRAWING IS ON FILE IN THE CENTRAL OFFICE

VDOT
ROAD AND BRIDGE STANDARDS

SHEET 5 OF 8 | REVISION DATE
1007.13 | 07/12

WING DETAILS

2:1 FILL SLOPE - TYPE II

VIRGINIA DEPARTMENT OF TRANSPORTATION

SPECIFICATION REFERENCE

BCW-22

WING	WF7							WF8		WF9		WF10		WF11			
	SIZE	a			LENGTH			SIZE	LENGTH	SIZE	LENGTH	SIZE	LENGTH	SIZE	a	LENGTH	• Ea
		FROM	TO	VARY BY	FROM	TO	VARY BY										
A	-	-	-	-	-	-	-	4	8'-2"	4	3'-2"	4	2'-2"	4	2'-2"	4'-2"	4
B	-	-	-	-	-	-	-	4	9'-8"	4	3'-2"	4	2'-2"	4	2'-2"	4'-2"	4
C	-	-	-	-	-	-	-	4	10'-8"	4	3'-2"	4	2'-2"	4	2'-2"	4'-2"	4
D	-	-	-	-	-	-	-	4	12'-2"	4	3'-2"	4	2'-2"	4	2'-2"	4'-2"	4
E	-	-	-	-	-	-	-	4	13'-8"	4	3'-8"	4	2'-2"	4	2'-2"	4'-2"	4
F	-	-	-	-	-	-	-	4	15'-2"	4	3'-8"	4	2'-2"	4	2'-2"	4'-2"	4
G	-	-	-	-	-	-	-	4	16'-8"	4	4'-2"	4	2'-2"	4	2'-2"	4'-2"	4
H	-	-	-	-	-	-	-	4	18'-2"	4	4'-2"	4	2'-2"	4	2'-2"	4'-2"	4
I	-	-	-	-	-	-	-	4	19'-2"	4	4'-8"	4	2'-2"	4	2'-2"	4'-2"	4
J	-	-	-	-	-	-	-	4	20'-8"	4	4'-8"	4	2'-2"	4	2'-2"	4'-2"	4
K	-	-	-	-	-	-	-	4	22'-2"	4	5'-2"	4	2'-2"	4	2'-2"	4'-2"	4
L	-	-	-	-	-	-	-	4	23'-8"	4	5'-2"	4	2'-2"	4	2'-2"	4'-2"	4
M	-	-	-	-	-	-	-	4	25'-2"	4	5'-8"	4	2'-2"	4	2'-2"	4'-2"	4
N	-	-	-	-	-	-	-	4	26'-8"	4	5'-8"	4	2'-2"	4	2'-2"	4'-2"	4
O	-	-	-	-	-	-	-	4	27'-8"	4	6'-2"	4	2'-2"	4	2'-2"	4'-2"	4
P	-	-	-	-	-	-	-	4	29'-2"	4	6'-8"	4	2'-2"	4	2'-2"	4'-2"	4
Q	-	-	-	-	-	-	-	4	30'-8"	4	6'-8"	4	2'-2"	4	2'-2"	4'-2"	4
R	5	6'-11"	6'-1"	0'-0¾"	8'-2"	7'-5"	0'-0¾"	4	32'-2"	4	6'-8"	4	2'-2"	4	2'-2"	4'-2"	4
S	6	7'-5"	6'-4"	0'-0¾"	8'-8"	7'-7"	0'-0¾"	4	33'-8"	4	7'-2"	4	2'-2"	4	2'-2"	4'-2"	4
T	6	7'-5"	6'-2"	0'-0¾"	8'-8"	7'-6"	0'-0¾"	4	35'-2"	4	7'-2"	4	2'-2"	4	2'-2"	4'-2"	4
U	6	7'-11"	6'-8"	0'-0¾"	9'-2"	8'-0"	0'-0¾"	4	36'-2"	4	7'-8"	4	2'-2"	4	2'-2"	4'-2"	4
V	6	8'-5"	7'-1"	0'-0¾"	9'-8"	8'-4"	0'-0¾"	4	37'-8"	4	8'-2"	4	2'-2"	4	2'-2"	4'-2"	4
W	6	8'-11"	7'-6"	0'-0¾"	10'-8"	9'-3"	0'-0¾"	4	39'-2"	4	8'-8"	4	2'-2"	4	2'-2"	4'-2"	4
X	6	9'-4"	7'-9"	0'-1"	11'-8"	10'-1"	0'-1"	4	40'-8"	4	9'-2"	4	2'-2"	4	2'-2"	4'-2"	4
Y	7	9'-5"	7'-10"	0'-0¾"	11'-7"	10'-1"	0'-0¾"	4	42'-2"	4	9'-2"	4	2'-2"	4	2'-2"	4'-2"	4
Z	7	9'-10"	8'-3"	0'-1"	12'-1"	10'-6"	0'-1"	4	43'-8"	4	9'-8"	4	2'-2"	4	2'-2"	4'-2"	4
AA	7	10'-4"	8'-7"	0'-1"	12'-7"	10'-10"	0'-1"	4	44'-8"	4	10'-2"	4	2'-2"	4	2'-2"	4'-2"	4
BB	7	10'-4"	8'-7"	0'-1"	12'-7"	10'-10"	0'-1"	4	46'-2"	4	10'-2"	4	2'-2"	4	2'-2"	4'-2"	4
CC	7	11'-4"	9'-3"	0'-1"	13'-7"	11'-5"	0'-1"	4	47'-8"	4	11'-2"	4	2'-2"	4	2'-2"	4'-2"	4
DD	7	12'-4"	9'-10"	0'-1⅛"	14'-7"	12'-1"	0'-1⅛"	4	49'-2"	4	12'-2"	4	2'-2"	4	2'-2"	4'-2"	4
EE	7	12'-4"	9'-11"	0'-1⅛"	14'-7"	12'-2"	0'-1⅛"	4	50'-8"	4	12'-2"	4	2'-2"	4	2'-2"	4'-2"	4

A COPY OF THE ORIGINAL SEALED AND SIGNED DRAWING IS ON FILE IN THE CENTRAL OFFICE

SPECIFICATION REFERENCE

WING DETAILS

2:1 FILL SLOPE - TYPE II

VIRGINIA DEPARTMENT OF TRANSPORTATION

VDOT

ROAD AND BRIDGE STANDARDS

REVISION DATE 07/12

SHEET 6 OF 8

1007.14

BCW-22

WING	STEM BAR SPACINGS												WV1						WV2			
	WV1		WV2		WV3		WV4		WH1		WH2		SIZE	a			LENGTH			SIZE	LENGTH		
	O	P	Q	R	S	T	U	V	W	X	Y	Z		FROM	TO	VARY BY	FROM	TO	VARY BY		FROM	TO	VARY BY
A	8	8'-0"	6	7'-6"	-	-	-	-	-	-	1	1'-3"	4	4'-11"	2'-3"	0'-4"	6'-10"	4'-1"	0'-4"	4	4'-11"	2'-5"	0'-5"
B	10	10'-0"	8	10'-0"	-	-	-	-	1	0'-6"	1	1'-3"	4	5'-5"	2'-1"	0'-4"	7'-4"	3'-11"	0'-4"	4	5'-5"	2'-1"	0'-5"
C	11	11'-0"	8	10'-0"	-	-	-	-	-	-	2	2'-6"	4	5'-11"	2'-1"	0'-4 1/8"	7'-10"	4'-0"	0'-4 1/8"	4	5'-11"	2'-5"	0'-5 1/4"
D	12	12'-0"	10	12'-6"	-	-	-	-	-	-	2	2'-6"	4	6'-5"	2'-3"	0'-4 1/8"	8'-4"	4'-2"	0'-4 1/8"	4	6'-5"	2'-1"	0'-5 1/8"
E	14	14'-0"	11	13'-9"	-	-	-	-	-	-	3	3'-9"	4	6'-11"	2'-1"	0'-4 1/8"	8'-10"	4'-0"	0'-4 1/8"	4	6'-11"	2'-2"	0'-5 1/8"
F	15	15'-0"	12	15'-0"	-	-	-	-	-	-	3	3'-9"	4	7'-5"	2'-3"	0'-4 1/8"	9'-4"	4'-2"	0'-4 1/8"	4	7'-5"	2'-3"	0'-5 1/8"
G	17	17'-0"	13	16'-3"	-	-	-	-	1	0'-6"	3	3'-9"	4	7'-11"	2'-1"	0'-4 1/8"	9'-10"	4'-0"	0'-4 1/8"	4	7'-11"	2'-4"	0'-5 1/8"
H	18	18'-0"	14	17'-6"	-	-	-	-	-	-	4	5'-0"	4	8'-5"	2'-3"	0'-4"	10'-4"	4'-2"	0'-4"	4	8'-5"	2'-5"	0'-5 1/8"
I	12	12'-0"	15	18'-9"	8	6'-0"	-	-	-	-	4	5'-0"	4	6'-5"	2'-3"	0'-4 1/8"	8'-4"	4'-2"	0'-4 1/8"	4	8'-11"	2'-4"	0'-5 1/4"
J	12	12'-0"	16	20'-0"	10	7'-6"	-	-	-	-	5	6'-3"	4	6'-5"	2'-3"	0'-4 1/8"	8'-4"	4'-2"	0'-4 1/8"	4	9'-5"	2'-5"	0'-5 1/4"
K	13	13'-0"	18	22'-6"	11	8'-3"	-	-	-	-	5	6'-3"	4	6'-8"	2'-2"	0'-4 1/8"	8'-7"	4'-1"	0'-4 1/8"	4	9'-11"	2'-1"	0'-5 1/8"
L	14	14'-0"	19	23'-9"	12	9'-0"	-	-	1	0'-6"	5	6'-3"	4	6'-11"	2'-1"	0'-4 1/8"	8'-10"	4'-0"	0'-4 1/8"	4	10'-5"	2'-2"	0'-5 1/8"
M	15	15'-0"	20	25'-0"	12	9'-0"	-	-	-	-	6	7'-6"	4	7'-5"	2'-3"	0'-4 1/8"	9'-4"	4'-2"	0'-4 1/8"	4	10'-11"	2'-3"	0'-5 1/8"
N	16	16'-0"	21	26'-3"	13	9'-9"	-	-	-	-	6	7'-6"	5	7'-8"	2'-2"	0'-4 1/8"	9'-8"	4'-1"	0'-4 1/8"	4	11'-5"	2'-4"	0'-5 1/8"
O	17	17'-0"	22	27'-6"	13	9'-9"	-	-	-	-	7	8'-9"	5	8'-2"	2'-2"	0'-4 1/8"	10'-1"	4'-1"	0'-4 1/8"	4	11'-11"	2'-3"	0'-5 1/4"
P	18	18'-0"	23	28'-9"	14	10'-6"	-	-	-	-	7	8'-9"	5	8'-5"	2'-1"	0'-4 1/8"	10'-4"	4'-0"	0'-4 1/8"	4	12'-5"	2'-4"	0'-5 1/4"
Q	18	18'-0"	24	30'-0"	16	12'-0"	-	-	1	0'-6"	7	8'-9"	5	8'-4"	2'-1"	0'-4 1/8"	10'-4"	4'-0"	0'-4 1/8"	4	12'-11"	2'-5"	0'-5 1/4"
R	15	15'-0"	26	32'-6"	13	9'-9"	12	6'-0"	-	-	8	10'-0"	4	7'-4"	2'-1"	0'-4 1/8"	9'-2"	4'-0"	0'-4 1/8"	4	13'-5"	2'-1"	0'-5 1/8"
S	15	15'-0"	27	33'-9"	13	9'-9"	15	7'-6"	-	-	8	10'-0"	4	7'-4"	2'-1"	0'-4 1/8"	9'-2"	4'-0"	0'-4 1/8"	4	13'-11"	2'-2"	0'-5 1/8"
T	14	14'-0"	28	35'-0"	15	11'-3"	17	8'-6"	-	-	9	11'-3"	4	6'-11"	2'-1"	0'-4 1/8"	8'-10"	4'-0"	0'-4 1/8"	4	14'-5"	2'-3"	0'-5 1/8"
U	14	14'-0"	29	36'-3"	17	12'-9"	16	8'-0"	-	-	9	11'-3"	4	7'-0"	2'-1"	0'-4 1/8"	8'-11"	4'-0"	0'-4 1/8"	4	14'-11"	2'-2"	0'-5 1/4"
V	15	15'-0"	30	37'-6"	17	12'-9"	17	8'-6"	1	0'-6"	9	11'-3"	4	7'-4"	2'-1"	0'-4 1/8"	9'-3"	4'-0"	0'-4 1/8"	4	15'-5"	2'-3"	0'-5 1/4"
W	15	15'-0"	31	38'-9"	19	14'-3"	17	8'-6"	-	-	10	12'-6"	4	7'-7"	2'-4"	0'-4 1/8"	9'-6"	4'-3"	0'-4 1/8"	4	16'-2"	2'-7"	0'-5 1/4"
X	17	17'-0"	32	40'-0"	17	12'-9"	19	9'-6"	-	-	10	12'-6"	4	8'-6"	2'-7"	0'-4 1/8"	10'-5"	4'-6"	0'-4 1/8"	4	16'-11"	2'-11"	0'-5 1/4"
Y	20	20'-0"	34	42'-6"	15	11'-3"	19	9'-6"	-	-	11	13'-9"	4	9'-7"	2'-7"	0'-4 1/8"	11'-5"	4'-6"	0'-4 1/8"	4	17'-5"	2'-7"	0'-5 1/8"
Z	20	20'-0"	35	43'-9"	17	12'-9"	19	9'-6"	-	-	11	13'-9"	4	9'-7"	2'-7"	0'-4 1/8"	11'-5"	4'-6"	0'-4 1/8"	4	17'-11"	2'-8"	0'-5 1/8"
AA	19	19'-0"	36	45'-0"	19	14'-3"	20	10'-0"	1	0'-6"	11	13'-9"	4	9'-3"	2'-7"	0'-4 1/8"	11'-2"	4'-6"	0'-4 1/8"	4	18'-5"	2'-7"	0'-5 1/4"
BB	20	20'-0"	37	46'-3"	19	14'-3"	21	10'-6"	-	-	12	15'-0"	4	9'-7"	2'-7"	0'-4 1/8"	11'-6"	4'-6"	0'-4 1/8"	4	18'-11"	2'-8"	0'-5 1/4"
CC	19	19'-0"	38	47'-6"	21	15'-9"	23	11'-6"	-	-	12	15'-0"	4	9'-3"	2'-7"	0'-4 1/8"	11'-2"	4'-6"	0'-4 1/8"	4	19'-5"	2'-9"	0'-5 1/4"
DD	18	18'-0"	39	48'-9"	23	17'-3"	25	12'-6"	-	-	13	16'-3"	4	8'-10"	2'-7"	0'-4 1/8"	10'-9"	4'-6"	0'-4 1/8"	4	19'-11"	2'-10"	0'-5 1/4"
EE	18	18'-0"	40	50'-0"	25	18'-9"	25	12'-6"	-	-	13	16'-3"	4	8'-10"	2'-7"	0'-4 1/8"	10'-9"	4'-6"	0'-4 1/8"	4	20'-5"	2'-11"	0'-5 1/4"

A COPY OF THE ORIGINAL SEALED AND SIGNED DRAWING IS ON FILE IN THE CENTRAL OFFICE

VDOT
ROAD AND BRIDGE STANDARDS

SHEET 7 OF 8 | REVISION DATE
1007.15 | 07/12

WING DETAILS

2:1 FILL SLOPE - TYPE II

VIRGINIA DEPARTMENT OF TRANSPORTATION

SPECIFICATION REFERENCE

BCW-22

WING	WV3							WV4							WH1			WH2					WH3	
	SIZE	a			LENGTH			SIZE	a			LENGTH			SIZE	LENGTH	• Ea	SIZE	LENGTH			• EA	SIZE	LENGTH
		FROM	TO	VARY BY	FROM	TO	VARY BY		FROM	TO	VARY BY	FROM	TO	VARY BY					FROM	TO	VARY BY			
A	-	-	-	-	-	-	-	-	-	-	-	-	-	-	4	8'-6"	2	4	6'-6"	2'-10"	3'-7½"	2	4	9'-0"
B	-	-	-	-	-	-	-	-	-	-	-	-	-	-	4	10'-0"	2	4	6'-7"	2'-10"	3'-8⅜"	2	4	10'-7"
C	-	-	-	-	-	-	-	-	-	-	-	-	-	-	4	11'-0"	2	4	9'-10"	2'-9"	3'-6⅜"	2	4	11'-7"
D	-	-	-	-	-	-	-	-	-	-	-	-	-	-	4	12'-6"	2	4	9'-10"	2'-9"	3'-6¼"	2	4	13'-3"
E	-	-	-	-	-	-	-	-	-	-	-	-	-	-	4	14'-0"	2	4	13'-6"	2'-9"	3'-6¾"	2	4	14'-10"
F	-	-	-	-	-	-	-	-	-	-	-	-	-	-	4	15'-6"	2	4	13'-7"	2'-10"	3'-7"	2	4	16'-5"
G	-	-	-	-	-	-	-	-	-	-	-	-	-	-	4	17'-0"	2	4	13'-7"	2'-10"	3'-7"	2	4	18'-0"
H	-	-	-	-	-	-	-	-	-	-	-	-	-	-	4	18'-6"	2	4	17'-3"	2'-10"	3'-7¼"	2	4	19'-6"
I	4	8'-11"	6'-10"	0'-3⅛"	10'-10"	8'-8"	0'-3⅛"	-	-	-	-	-	-	-	4	19'-6"	2	4	16'-11"	2'-9"	3'-6⅜"	2	4	20'-8"
J	4	9'-5"	6'-9"	0'-3⅛"	11'-4"	8'-8"	0'-3⅛"	-	-	-	-	-	-	-	4	21'-0"	2	4	20'-6"	2'-9"	3'-6½"	2	4	22'-3"
K	5	9'-11"	7'-0"	0'-3⅛"	11'-10"	9'-0"	0'-3⅛"	-	-	-	-	-	-	-	4	22'-6"	2	4	20'-6"	2'-9"	3'-6⅝"	2	4	23'-9"
L	5	10'-5"	7'-3"	0'-3⅛"	12'-4"	9'-3"	0'-3⅛"	-	-	-	-	-	-	-	4	24'-0"	2	4	20'-8"	2'-9"	3'-6⅞"	2	4	25'-5"
M	6	10'-11"	7'-10"	0'-3"	12'-11"	9'-10"	0'-3"	-	-	-	-	-	-	-	4	25'-6"	2	4	24'-3"	2'-9"	3'-6⅞"	2	4	27'-0"
N	6	11'-5"	8'-0"	0'-3"	13'-5"	10'-1"	0'-3"	-	-	-	-	-	-	-	4	27'-0"	2	4	24'-3"	2'-0"	3'-7"	2	4	28'-6"
O	6	11'-11"	8'-6"	0'-3⅛"	13'-11"	10'-6"	0'-3⅛"	-	-	-	-	-	-	-	4	28'-0"	2	4	27'-6"	2'-9"	3'-6⅜"	2	4	29'-8"
P	6	12'-5"	8'-9"	0'-3⅛"	14'-5"	10'-9"	0'-3⅛"	-	-	-	-	-	-	-	4	29'-6"	2	4	27'-6"	2'-9"	3'-6½"	2	4	31'-3"
Q	7	12'-11"	8'-9"	0'-3⅛"	15'-0"	10'-10"	0'-3⅛"	-	-	-	-	-	-	-	4	31'-0"	2	4	27'-8"	2'-9"	3'-6⅝"	2	4	32'-10"
R	6	11'-1"	7'-8"	0'-3⅛"	13'-1"	9'-8"	0'-3⅛"	6	13'-5"	11'-4"	0'-2"	15'-5"	13'-4"	0'-2"	4	32'-6"	2	4	31'-3"	2'-10"	3'-6⅝"	2	4	34'-4"
S	6	11'-0"	7'-8"	0'-3⅛"	13'-1"	9'-8"	0'-3⅛"	6	13'-11"	11'-4"	0'-2"	15'-11"	13'-4"	0'-2"	4	34'-0"	2	4	31'-3"	2'-10"	3'-6¾"	2	4	36'-0"
T	6	11'-2"	7'-3"	0'-3⅛"	13'-3"	9'-4"	0'-3⅛"	6	14'-5"	11'-6"	0'-2"	16'-5"	13'-6"	0'-2"	4	35'-6"	2	4	35'-0"	2'-10"	3'-6⅞"	2	4	37'-7"
U	6	11'-10"	7'-4"	0'-3⅛"	13'-10"	9'-5"	0'-3⅛"	7	14'-11"	12'-1"	0'-2"	17'-0"	14'-3"	0'-2"	4	36'-6"	2	4	34'-7"	2'-9"	3'-6⅜"	2	4	38'-9"
V	6	12'-2"	7'-8"	0'-3⅛"	14'-2"	9'-9"	0'-3⅛"	7	15'-5"	12'-5"	0'-2"	17'-6"	14'-7"	0'-2"	4	38'-0"	2	4	34'-7"	2'-9"	3'-6½"	2	4	40'-4"
W	6	12'-11"	7'-11"	0'-3⅛"	14'-11"	9'-11"	0'-3⅛"	7	16'-2"	13'-2"	0'-2"	18'-3"	15'-4"	0'-2"	4	39'-6"	2	4	38'-3"	2'-10"	3'-6½"	2	4	41'-11"
X	6	13'-4"	8'-10"	0'-3⅛"	15'-4"	10'-11"	0'-3⅛"	7	16'-11"	13'-7"	0'-2"	19'-0"	15'-9"	0'-2"	4	41'-0"	2	4	38'-4"	2'-9"	3'-6⅝"	2	4	43'-6"
Y	7	13'-10"	9'-11"	0'-3⅛"	15'-11"	12'-0"	0'-3⅛"	7	17'-5"	14'-1"	0'-2"	19'-6"	16'-3"	0'-2"	4	42'-6"	2	4	42'-0"	2'-9"	3'-6¾"	2	4	45'-0"
Z	7	14'-4"	9'-11"	0'-3⅛"	16'-6"	12'-0"	0'-3⅛"	7	17'-11"	14'-7"	0'-2"	20'-0"	16'-9"	0'-2"	4	44'-0"	2	4	42'-1"	2'-9"	3'-6⅞"	2	4	46'-7"
AA	7	14'-8"	9'-7"	0'-3⅛"	16'-9"	11'-9"	0'-3⅛"	7	18'-5"	14'-11"	0'-2"	20'-6"	17'-0"	0'-2"	4	45'-0"	2	4	41'-7"	2'-9"	3'-6⅜"	2	4	47'-9"
BB	7	15'-0"	9'-11"	0'-3⅛"	17'-1"	12'-1"	0'-3⅛"	8	18'-11"	15'-3"	0'-2"	21'-1"	17'-5"	0'-2"	4	46'-6"	2	4	45'-3"	2'-9"	3'-6½"	2	4	49'-4"
CC	7	15'-1"	9'-7"	0'-3⅛"	17'-3"	11'-8"	0'-3⅛"	8	19'-5"	15'-5"	0'-2"	21'-7"	17'-7"	0'-2"	4	48'-0"	2	4	45'-4"	2'-10"	3'-6½"	2	4	50'-11"
DD	7	15'-3"	9'-3"	0'-3⅛"	17'-5"	11'-4"	0'-3⅛"	8	19'-11"	15'-6"	0'-2"	22'-1"	17'-9"	0'-2"	4	49'-6"	2	4	49'-0"	2'-9"	3'-6⅝"	2	4	52'-6"
EE	7	15'-9"	9'-3"	0'-3⅛"	17'-11"	11'-4"	0'-3⅛"	9	20'-5"	16'-0"	0'-2"	22'-10"	18'-6"	0'-2"	4	51'-0"	2	4	49'-1"	2'-9"	3'-6¾"	2	4	54'-1"

A COPY OF THE ORIGINAL SEALED AND SIGNED DRAWING IS ON FILE IN THE CENTRAL OFFICE

SPECIFICATION REFERENCE

WING DETAILS

2:1 FILL SLOPE - TYPE II

VIRGINIA DEPARTMENT OF TRANSPORTATION

VDOT

ROAD AND BRIDGE STANDARDS

REVISION DATE 07/12

SHEET 8 OF 8

1007.16

BCW-22

THIS PAGE INTENTIONALLY LEFT BLANK

VDOT ROAD AND BRIDGE STANDARDS	
SHEET 1 OF 1	REVISION DATE 07.11

VIRGINIA DEPARTMENT OF TRANSPORTATION

BCE-01

In case of skewed culverts, wingwalls conflicting with barrel of proposed extension are to be removed.

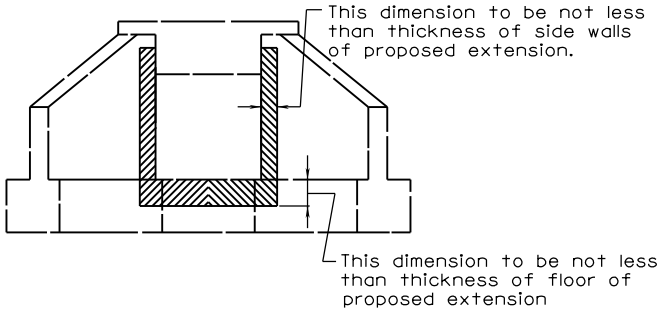

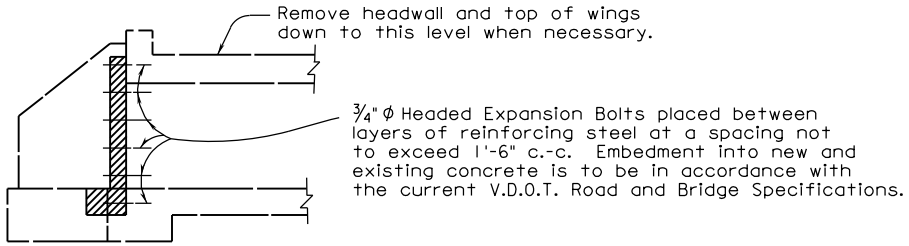

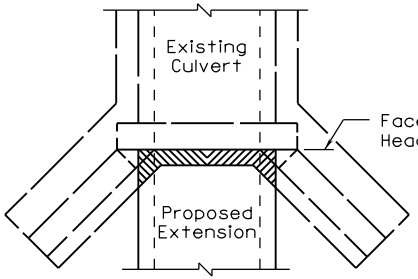

Culverts with pile foundations will require special details.

Notes:

Shaded portion indicates existing concrete to be removed, so that all portions of proposed extension will begin in a vertical plane at face of existing headwall.
Details of proposed extension including headwall for same can be obtained from box culvert standard.
Unit price bid for concrete and reinforcement shall include cost of removal and disposal of old concrete and the furnishing and placing of dowels and expansion bolts required.

SPECIFICATION REFERENCE	DETAILS FOR WIDENING EXISTING BOX CULVERTS MODIFICATIONS TO EXISTING BOX VIRGINIA DEPARTMENT OF TRANSPORTATION	VDOT ROAD AND BRIDGE STANDARDS	
		REVISION DATE 07/11	SHEET 1 OF 4 1008.01

BCE-01

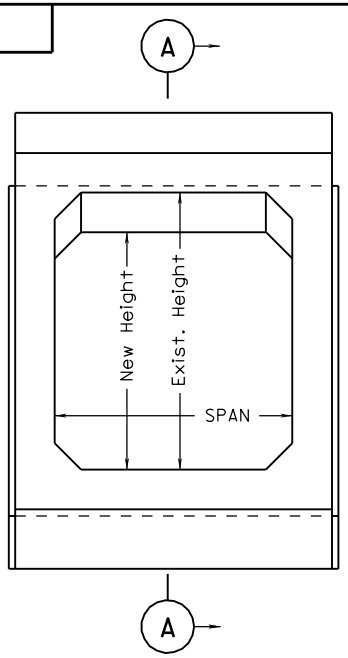

SECTION THRU CULVERT

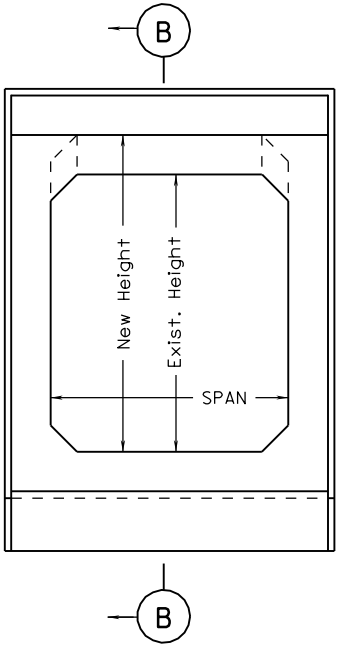

SECTION THRU CULVERT

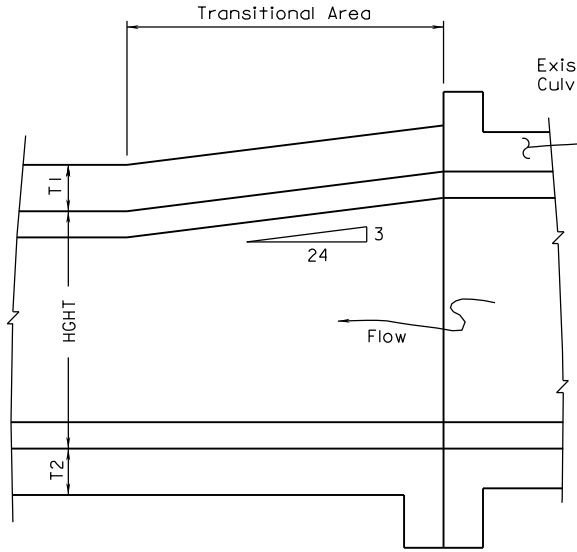

SECTION A-A

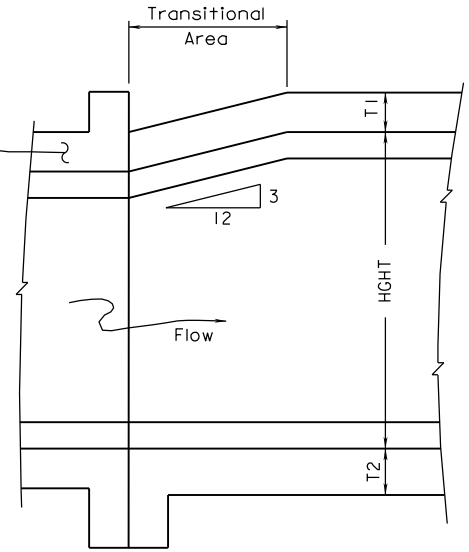

SECTION B-B

Notes:

Adjustments in quantities will be required when a change in height exists as shown in Sections A & B. Quantities of concrete and reinforcing steel shall be increased or decreased accordingly. For cases where only wall thickness changes, there shall be no quantity adjustments.

For SPAN, HGHT, & T dimensions, refer to appropriate Box Culvert Standard. This standard is to be used only when a change in height or wall thickness occurs. It does not apply to changes in SPAN.

VDOT ROAD AND BRIDGE STANDARDS	DETAILS FOR WIDENING EXISTING BOX CULVERTS HEIGHT TRANSITIONS VIRGINIA DEPARTMENT OF TRANSPORTATION	SPECIFICATION REFERENCE	
SHEET 2 OF 4	REVISION DATE 07/11		
1008.02			

BCE-01

For SPAN, HGHT, & T dimensions, refer to appropriate Box Culvert Standard. This standard is to be used only when a change in height or wall thickness occurs. It does not apply to changes in SPAN.

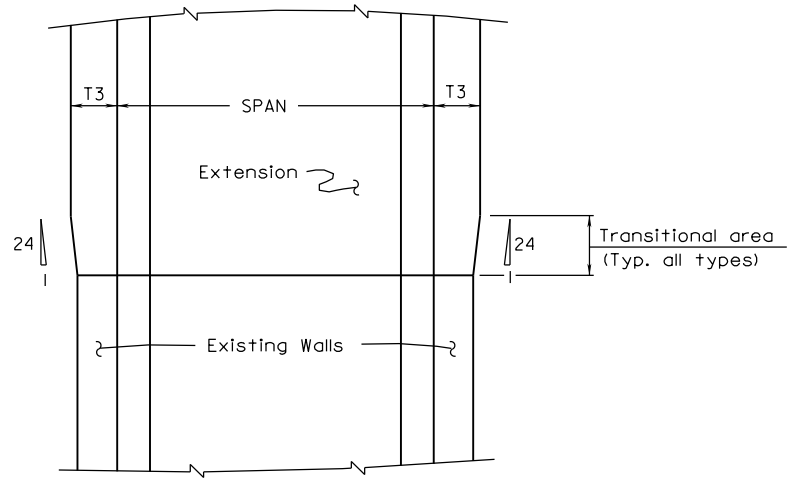

SINGLE BOX CULVERT

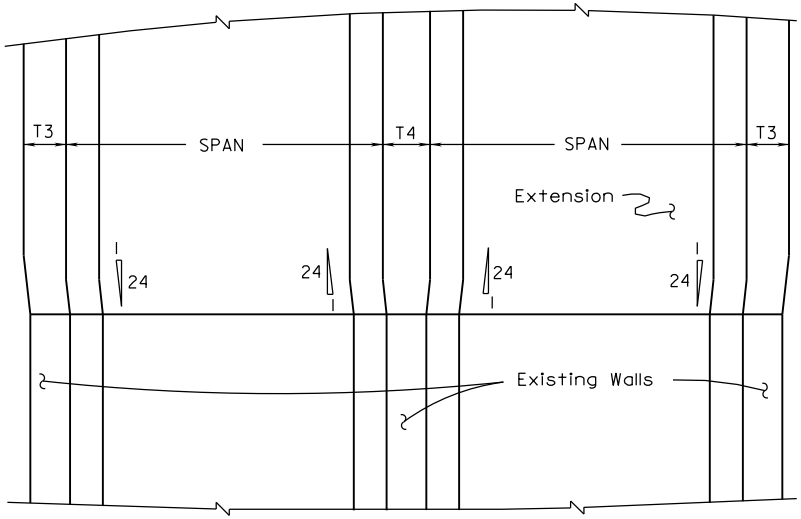

DOUBLE BOX CULVERT

SPECIFICATION REFERENCE	DETAILS FOR WIDENING EXISTING BOX CULVERTS WALL TRANSITIONS VIRGINIA DEPARTMENT OF TRANSPORTATION	VDOT ROAD AND BRIDGE STANDARDS	
		REVISION DATE 07/11	SHEET 3 OF 4 1008.03

BCE-01

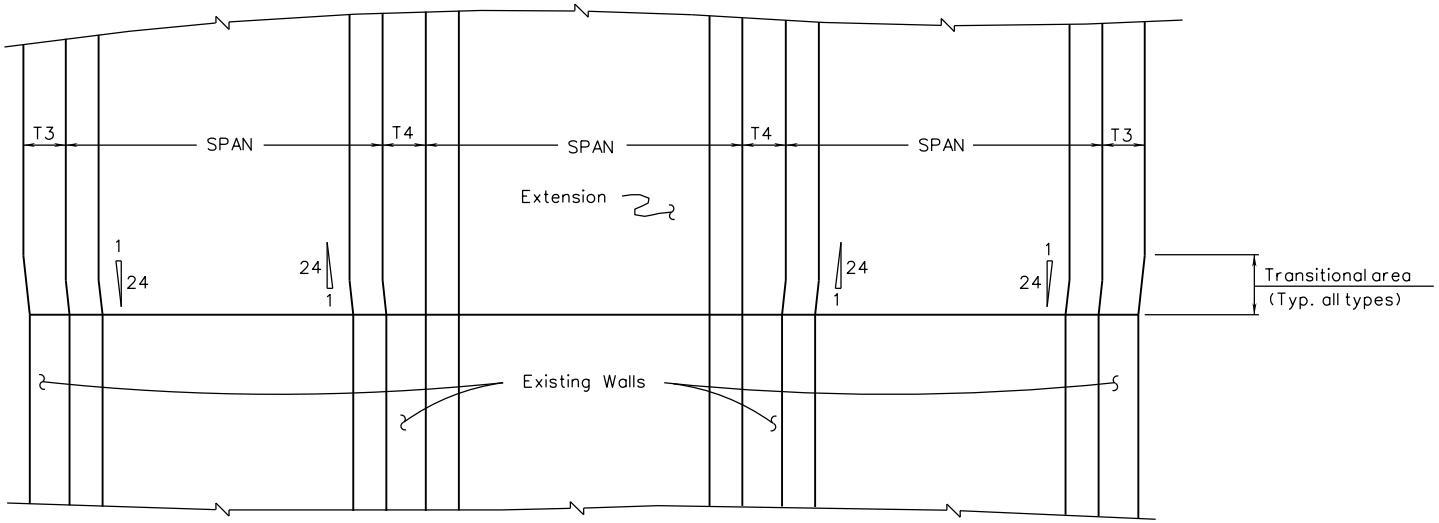

TRIPLE BOX CULVERT

For SPAN, HGHT, & T dimensions, refer to appropriate Box Culvert Standard. This standard is to be used only when a change in height or wall thickness occurs. It does not apply to changes in SPAN.

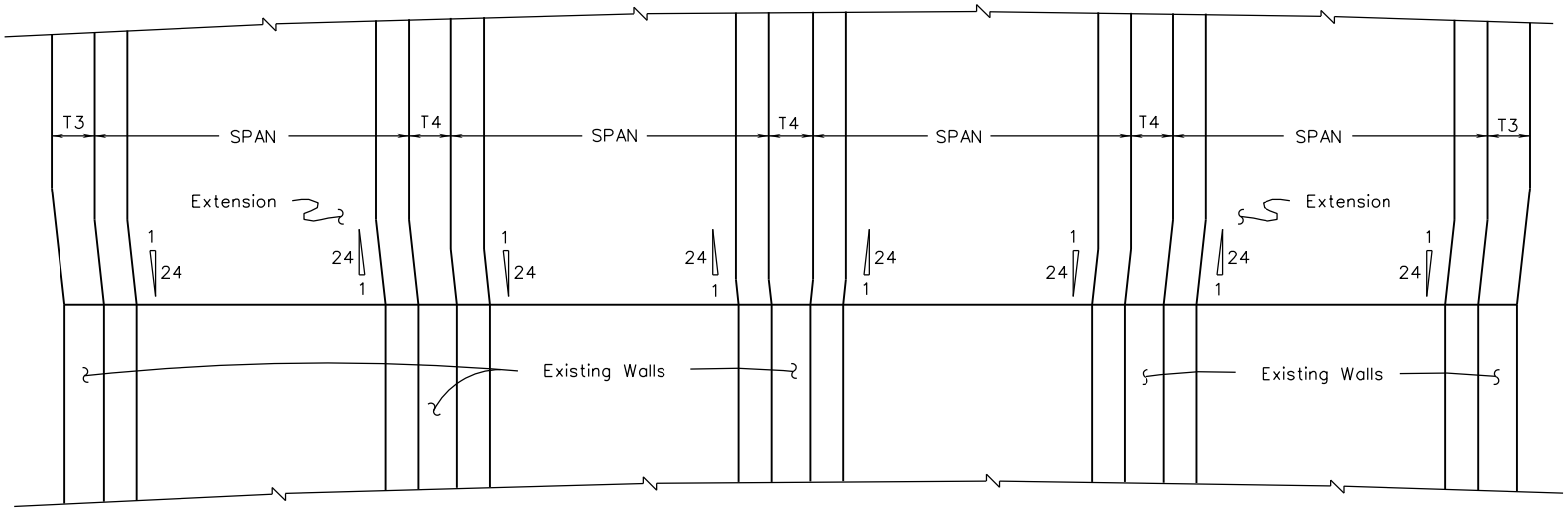

QUADRUPLE BOX CULVERT

VDOT
ROAD AND BRIDGE STANDARDS

SHEET 4 OF 4

1008.04

REVISION DATE
07/11

DETAILS FOR WIDENING EXISTING BOX CULVERTS

WALL TRANSITIONS

VIRGINIA DEPARTMENT OF TRANSPORTATION

SPECIFICATION REFERENCE