COMMONWEALTH OF VIRGINIA

VDOT

VIRGINIA DEPARTMENT OF TRANSPORTATION

2016

ROAD AND BRIDGE STANDARDS

VOLUME I I

VIRGINIA DEPARTMENT OF TRANSPORTATION

LOCATION AND DESIGN DIVISION

PROCEDURAL MEMORANDUM

GENERAL SUBJECT: Standard Drawings	NUMBER: N/A
SPECIFIC SUBJECT: 2016 Road & Bridge Standards	DATE: July 27, 2016 SUPERSEDES: N/A
APPROVED:	B. A. Thrasher, P.E. State Location and Design Engineer Approved July 27, 2016

EFFECTIVE DATE

Effective July 2016, required to be used on all VDOT projects,
Tier 1 projects going to Advertisement on November 22, 2016 (Non Federally Eligible), December 13, 2016 (Federally Eligible)
Tier 2 projects going to Advertisement on February 14, 2017.

PURPOSE

Provides standard drawings to be used on VDOT projects and for roadway construction within the right of way of the Commonwealth of Virginia.

2016
ROAD AND BRIDGE STANDARDS
VOLUME II

VIRGINIA DEPARTMENT OF TRANSPORTATION

SPECIFICATION REFERENCES NOTED THROUGHOUT ARE BASED ON VIRGINIA DEPARTMENT OF TRANSPORTATION ROAD AND BRIDGE SPECIFICATIONS DATED 2016.

Copyright 2016 Commonwealth of Virginia

RECOMMENDED FOR APPROVAL B. A. Thrasher
STATE LOCATION & DESIGN ENGINEER
DATE 7/27/16

APPROVED Mohammed Mirshahi
for CHIEF ENGINEER
DATE 8/1/16

SECTION 1000
BOX CULVERTS

ITEMS	SERIES
OVERSIZE BOX CULVERTS	1001
SINGLE BOX CULVERTS	1002
DOUBLE BOX CULVERTS	1003
TRIPLE BOX CULVERTS	1004
QUADRUPLE BOX CULVERTS	1005
WING DETAILS	1006
DETAILS FOR WIDENING BOX CULVERTS	1007

SECTION 1100
MISC. STRUCTURE AND BRIDGE STANDARDS

ITEMS	SERIES
BRIDGE CONSTRUCTION AND WIDENING DATE PLATES	1101

SECTION 1200
LANDSCAPE

ITEMS	SERIES
MISCELLANEOUS LANDSCAPE DETAILS, RETAINING WALLS	1201

SECTION 1300
TRAFFIC CONTROL DEVICES

ITEMS	SERIES
CONTROLLER CABINET	1301
SIGNAL POLE	1302
SIGNAL HEAD	1303
TETHER WIRE DETAILS	1304
SIGN MOUNTING DETAILS	1305
POLE WIRING	1306
PEDESTRIAN ACTUATION	1307
PEDESTRIAN SIGNAL INDICATION	1308
FLASHING BEACONS	1309
SIGNAL AND LIGHTING POLE FOUNDATION	1310
LIGHTING POLE, HIGH MAST LIGHT POLE	1311
ELECTRICAL SERVICE	1312
ELECTRICAL SERVICE	1313
CONTROL CENTER WIRING	1314
DETECTORS	1315
JUNCTION BOXES	1317
ELECTRICAL CONDUIT AND CONDUCTOR CABLE	1318
PROCEDURES FOR CALCULATING CENTROID AND SQUARE FOOTAGE OF SIGN PANEL	1319
WOOD POST SIGN STRUCTURES	1320
SQUARE TUBE SIGN POST	1321
VA SIGN POST STRUCTURE	1322
INTERSTATE SIGN POST STRUCTURE	1323
OVERHEAD SIGN STRUCTURE	1324
SIGN PANELS	1325
PUNCHING REQUIREMENTS FOR SIGN PANELS	1326
ROAD EDGE DELINEATORS	1327
MILEPOST MARKERS	1328
PAVEMENT MARKINGS	1330
PAVMENT WORD, SYMBOL, AND ARROW MARKINGS	1340

SECTION 1400
UTILITIES

ITEMS	SERIES
MISCELLANEOUS UTILITY DETAILS, ENCASEMENTS, VALVES, AND MANHOLES	1401

TABLE OF CONTENTS
VOLUME II

SECTION 1000

BOX CULVERTS

STANDARD

THIS PAGE INTENTIONALLY LEFT BLANK

VDOT
ROAD AND BRIDGE STANDARDS

SHEET 1 OF 1

REVISION DATE

TITLE

VIRGINIA DEPARTMENT OF TRANSPORTATION

SPECIFICATION REFERENCE

STANDARD	TITLE	PAGE
BC-GEN	GENERAL BOX CULVERT ASSUMPTIONS	1000.05
BCB-DT	OVERSIZE BOX CULVERT STANDARD DETAILS	1001.01
	OVERSIZE BOX CULVERT STANDARD DETAILS	1001.02
BCB-02	OVERSIZE BOX CULVERT (0 TO 2 FT. FILLS)	1001.03
BCB-05	OVERSIZE BOX CULVERT (2 TO 5 FT. FILLS)	1001.04
BCB-10	OVERSIZE BOX CULVERT (5 TO 10 FT. FILLS)	1001.05
BCB-20	OVERSIZE BOX CULVERT (10 TO 20 FT. FILLS)	1001.06
BCB-30	OVERSIZE BOX CULVERT (20 TO 30 FT. FILLS)	1001.07
BCB-40	OVERSIZE BOX CULVERT (30 TO 40 FT. FILLS)	1001.08
BCB-50	OVERSIZE BOX CULVERT (40 TO 50 FT. FILLS)	1001.09
BCS-DT	SINGLE BOX CULVERT STANDARD DETAILS	1002.01
	SINGLE BOX CULVERT STANDARD DETAILS	1002.02
BCS-02	SINGLE BOX CULVERT (0 TO 2 FT. FILLS)	1002.03
	SINGLE BOX CULVERT (0 TO 2 FT. FILLS)	1002.04
BCS-05	SINGLE BOX CULVERT (2 TO 5 FT. FILLS)	1002.05
	SINGLE BOX CULVERT (2 TO 5 FT. FILLS)	1002.06
BCS-10	SINGLE BOX CULVERT (5 TO 10 FT. FILLS)	1002.07
	SINGLE BOX CULVERT (5 TO 10 FT. FILLS)	1002.08
BCS-20	SINGLE BOX CULVERT (10 TO 20 FT. FILLS)	1002.09
	SINGLE BOX CULVERT (10 TO 20 FT. FILLS)	1002.10
BCS-30	SINGLE BOX CULVERT (20 TO 30 FT. FILLS)	1002.11
	SINGLE BOX CULVERT (20 TO 30 FT. FILLS)	1002.12
BCS-40	SINGLE BOX CULVERT (30 TO 40 FT. FILLS)	1002.13
	SINGLE BOX CULVERT (30 TO 40 FT. FILLS)	1002.14
BCS-50	SINGLE BOX CULVERT (40 TO 50 FT. FILLS)	1002.15
	SINGLE BOX CULVERT (40 TO 50 FT. FILLS)	1002.16
BCD-DT	DOUBLE BOX CULVERT STANDARD DETAILS	1003.01
	DOUBLE BOX CULVERT STANDARD DETAILS	1003.02
	DOUBLE BOX CULVERT STANDARD DETAILS	1003.03
	DOUBLE BOX CULVERT BLANK SHEET	1003.04
BCD-02	DOUBLE BOX CULVERT (0 TO 2 FT. FILLS)	1003.05
	DOUBLE BOX CULVERT (0 TO 2 FT. FILLS)	1003.06

INDEX OF SHEETS
SECTION 1000-BOX CULVERTS

VIRGINIA DEPARTMENT OF TRANSPORTATION

VDOT
ROAD AND BRIDGE STANDARDS

REVISION DATE	SHEET 1 OF 4
07/11	1000.01

STANDARD	TITLE	PAGE
BCD-05	DOUBLE BOX CULVERT (2 TO 5 FT. FILLS)	1003.07
	DOUBLE BOX CULVERT (2 TO 5 FT. FILLS)	1003.08
BCD-10	DOUBLE BOX CULVERT (5 TO 10 FT. FILLS)	1003.09
	DOUBLE BOX CULVERT (5 TO 10 FT. FILLS)	1003.10
BCD-20	DOUBLE BOX CULVERT (10 TO 20 FT. FILLS)	1003.11
	DOUBLE BOX CULVERT (10 TO 20 FT. FILLS)	1003.12
BCD-30	DOUBLE BOX CULVERT (20 TO 30 FT. FILLS)	1003.13
	DOUBLE BOX CULVERT (20 TO 30 FT. FILLS)	1003.14
BCD-40	DOUBLE BOX CULVERT (30 TO 40 FT. FILLS)	1003.15
	DOUBLE BOX CULVERT (30 TO 40 FT. FILLS)	1003.16
BCD-50	DOUBLE BOX CULVERT (40 TO 50 FT. FILLS)	1003.17
	DOUBLE BOX CULVERT (40 TO 50 FT. FILLS)	1003.18
BCT-DT	TRIPLE BOX CULVERT STANDARD DETAILS	1004.01
	TRIPLE BOX CULVERT STANDARD DETAILS	1004.02
	TRIPLE BOX CULVERT STANDARD DETAILS	1004.03
	TRIPLE BOX CULVERT BLANK SHEET	1004.04
BCT-02	TRIPLE BOX CULVERT (0 TO 2 FT. FILLS)	1004.05
	TRIPLE BOX CULVERT (0 TO 2 FT. FILLS)	1004.06
BCT-05	TRIPLE BOX CULVERT (2 TO 5 FT. FILLS)	1004.07
	TRIPLE BOX CULVERT (2 TO 5 FT. FILLS)	1004.08
BCT-10	TRIPLE BOX CULVERT (5 TO 10 FT. FILLS)	1004.09
	TRIPLE BOX CULVERT (5 TO 10 FT. FILLS)	1004.10
BCT-20	TRIPLE BOX CULVERT (10 TO 20 FT. FILLS)	1004.11
	TRIPLE BOX CULVERT (10 TO 20 FT. FILLS)	1004.12
BCT-30	TRIPLE BOX CULVERT (20 TO 30 FT. FILLS)	1004.13
	TRIPLE BOX CULVERT (20 TO 30 FT. FILLS)	1004.14
BCT-40	TRIPLE BOX CULVERT (30 TO 40 FT. FILLS)	1004.15
	TRIPLE BOX CULVERT (30 TO 40 FT. FILLS)	1004.16
BCT-50	TRIPLE BOX CULVERT (40 TO 50 FT. FILLS)	1004.17
	TRIPLE BOX CULVERT (40 TO 50 FT. FILLS)	1004.18
BCQ-DT	QUADRUPLE BOX CULVERT STANDARD DETAILS	1005.01
	QUADRUPLE BOX CULVERT STANDARD DETAILS	1005.02
	QUADRUPLE BOX CULVERT STANDARD DETAILS	1005.03
	QUADRUPLE BOX CULVERT BLANK SHEET	1005.04

VDOT
ROAD AND BRIDGE STANDARDS

SHEET 2 OF 4	REVISION DATE
1000.02	07.11

INDEX OF SHEETS
SECTION 1000-BOX CULVERTS

VIRGINIA DEPARTMENT OF TRANSPORTATION

STANDARD	TITLE	PAGE
BCQ-02	QUADRUPLE BOX CULVERT (0 TO 2 FT. FILLS)	1005.05
	QUADRUPLE BOX CULVERT (0 TO 2 FT. FILLS)	1005.06
BCQ-05	QUADRUPLE BOX CULVERT (2 TO 5 FT. FILLS)	1005.07
	QUADRUPLE BOX CULVERT (2 TO 5 FT. FILLS)	1005.08
BCQ-10	QUADRUPLE BOX CULVERT (5 TO 10 FT. FILLS)	1005.09
	QUADRUPLE BOX CULVERT (5 TO 10 FT. FILLS)	1005.10
BCQ-20	QUADRUPLE BOX CULVERT (10 TO 20 FT. FILLS)	1005.11
	QUADRUPLE BOX CULVERT (10 TO 20 FT. FILLS)	1005.12
BCQ-30	QUADRUPLE BOX CULVERT (20 TO 30 FT. FILLS)	1005.13
	QUADRUPLE BOX CULVERT (20 TO 30 FT. FILLS)	1005.14
BCQ-40	QUADRUPLE BOX CULVERT (30 TO 40 FT. FILLS)	1005.15
	QUADRUPLE BOX CULVERT (30 TO 40 FT. FILLS)	1005.16
BCQ-50	QUADRUPLE BOX CULVERT (40 TO 50 FT. FILLS)	1005.17
	QUADRUPLE BOX CULVERT (40 TO 50 FT. FILLS)	1005.18
BCW-11	WING DETAIL 1.5:1 FILL SLOPE - TYPE I	1006.01
	WING DETAIL 1.5:1 FILL SLOPE - TYPE I	1006.02
	WING DETAIL 1.5:1 FILL SLOPE - TYPE I	1006.03
	WING DETAIL 1.5:1 FILL SLOPE - TYPE I	1006.04
	WING DETAIL 1.5:1 FILL SLOPE - TYPE I	1006.05
	WING DETAIL 1.5:1 FILL SLOPE - TYPE I	1006.06
	WING DETAIL 1.5:1 FILL SLOPE - TYPE I	1006.07
	WING DETAIL 1.5:1 FILL SLOPE - TYPE I	1006.08
BCW-12	WING DETAIL 1.5:1 FILL SLOPE - TYPE II	1006.09
	WING DETAIL 1.5:1 FILL SLOPE - TYPE II	1006.10
	WING DETAIL 1.5:1 FILL SLOPE - TYPE II	1006.11
	WING DETAIL 1.5:1 FILL SLOPE - TYPE II	1006.12
	WING DETAIL 1.5:1 FILL SLOPE - TYPE II	1006.13
	WING DETAIL 1.5:1 FILL SLOPE - TYPE II	1006.14
	WING DETAIL 1.5:1 FILL SLOPE - TYPE II	1006.15
	WING DETAIL 1.5:1 FILL SLOPE - TYPE II	1006.16

INDEX OF SHEETS
SECTION 1000-BOX CULVERTS

VIRGINIA DEPARTMENT OF TRANSPORTATION

VDOT
ROAD AND BRIDGE STANDARDS

REVISION DATE 07/12

SHEET 3 OF 4

1000.03

STANDARD	TITLE	PAGE
BCW-21	WING DETAIL 2:1 FILL SLOPE - TYPE I	1007.01
	WING DETAIL 2:1 FILL SLOPE - TYPE I	1007.02
	WING DETAIL 2:1 FILL SLOPE - TYPE I	1007.03
	WING DETAIL 2:1 FILL SLOPE - TYPE I	1007.04
	WING DETAIL 2:1 FILL SLOPE - TYPE I	1007.05
	WING DETAIL 2:1 FILL SLOPE - TYPE I	1007.06
	WING DETAIL 2:1 FILL SLOPE - TYPE I	1007.07
	WING DETAIL 2:1 FILL SLOPE - TYPE I	1007.08
BCW-22	WING DETAIL 2:1 FILL SLOPE - TYPE II	1007.09
	WING DETAIL 2:1 FILL SLOPE - TYPE II	1007.10
	WING DETAIL 2:1 FILL SLOPE - TYPE II	1007.11
	WING DETAIL 2:1 FILL SLOPE - TYPE II	1007.12
	WING DETAIL 2:1 FILL SLOPE - TYPE II	1007.13
	WING DETAIL 2:1 FILL SLOPE - TYPE II	1007.14
	WING DETAIL 2:1 FILL SLOPE - TYPE II	1007.15
	WING DETAIL 2:1 FILL SLOPE - TYPE II	1007.16
BCE-01	DETAILS FOR WIDENING EXISTING BOX CULVERTS	1008.01 THRU 1008.04
	DETAILS FOR WIDENING EXISTING BOX CULVERTS	

VDOT
ROAD AND BRIDGE STANDARDS

SHEET 4 OF 4 | REVISION DATE

1000.04

INDEX OF SHEETS
SECTION 1000-BOX CULVERTS

VIRGINIA DEPARTMENT OF TRANSPORTATION

NOTES TO DESIGNER:

The designer shall ensure that the following checks are undertaken to ensure the suitability of the standard box culvert and wingwall designs to a particular site.

General:

The designer shall review the site investigation results and material testing to confirm the site exposure and environment is within the scope of these standards. This includes highly saline environments, maritime environments including splash zones and other aggressive chemicals.

Box Culverts:

The designer shall review the geometry and applied loading of the proposed site to ensure that the design is within the scope of these standards.

AASHTO Crack Control Criteria, Article 5.7.3.4, is ignored.

Wingwalls:

The standard wingwall designs do not allow for increased earth pressure loads due to seismic effects.

The designer shall ensure that the overall slip circle stability and wall deflections are checked in accordance with Section 11.6.2 of AASHTO LRFD.

The designer shall ensure the friction angle for founding stratum, ffound', is a minimum of 32 degrees for 2:1 Slope Wingwalls and 34 degrees for 1.5:1 Slope Wingwalls.
Where the founding stratum is a cohesive soil, the designer shall ensure that the sliding stability of the wall is verified.

Where the designer proposes to improve the foundation strata to allow the use of the standard wingwall designs, the designer shall ensure that additional sliding and bearing pressure checks are carried out at the base of the improved soil layer.

In locations where it is not practical to provide the back of wall drainage system as indicated on the drawings, the designer shall re-check the wingwall designs taking into account the site groundwater conditions. Special consideration of groundwater conditions may also be required in locations where the watercourse is prone to rapid and significant changes in water level, including seepage effects where appropriate.

The designer shall calculate the nominal bearing resistance of the foundation material using the semi-empirical approach given in AASHTO LRFD Section 10.6.3.1.3 using the width of footing at the low and high ends of the wingwall, dimensions N1 and N2, for the footing width B. The designer shall check that the factored bearing resistance at each end of the wall, qR, is greater than the minimum values given in the table below. Where the factored bearing resistance is below the minimum values given in the table the designer shall re-design the wall based on an increased footing width or provide improvement to the foundation bearing resistance such that its bearing resistance exceeds the minimum values.

2:1 Slope Wingwalls Type I

N1 OR N2 (FT.)	$q_{r,min.}$ (ksf)	N1 OR N2 (FT.)	$q_{r,min.}$ (ksf)
3'-0"	0.85	9'-0"	3.92
3'-6"	1.11	9'-6"	3.99
4'-0"	1.27	10'-0"	4.07
4'-6"	1.71	11'-0"	4.28
5'-0"	2.03	12'-0"	4.36
5'-6"	2.36	12'-6"	4.46
6'-0"	2.70	13'-0"	4.56
6'-6"	3.05	14'-0"	4.56
7'-0"	3.10	14'-6"	4.66
7'-6"	3.45	15'-0"	4.99
8'-0"	3.51	15'-6"	5.10
8'-6"	3.86		

2:1 Slope Wingwalls Type II

N1 OR N2 (FT.)	$q_{r,min.}$ (ksf)	N1 OR N2 (FT.)	$q_{r,min.}$ (ksf)
3'-0"	0.48	8'-0"	4.13
4'-0"	1.40	8'-6"	4.16
4'-6"	1.71	9'-0"	4.21
5'-0"	2.03	9'-6"	4.43
5'-6"	2.36	10'-0"	5.19
6'-0"	2.70	10'-6"	5.23
6'-6"	3.05	11'-0"	5.61
7'-0"	3.10	12'-0"	5.40
7'-6"	3.76	13'-0"	5.55

1.5:1 Slope Wingwalls Type I

N1 OR N2 (FT.)	$q_{r,min.}$ (ksf)	N1 OR N2 (FT.)	$q_{r,min.}$ (ksf)
3'-0"	1.02	8'-6"	3.44
3'-6"	1.15	9'-0"	3.57
4'-0"	1.50	9'-6"	3.71
4'-3"	1.68	10'-0"	4.10
4'-6"	1.88	11'-6"	4.28
4'-9"	2.08	12'-0"	4.42
5'-0"	1.98	12'-6"	4.55
5'-6"	2.40	13'-6"	4.60
6'-0"	2.53	15'-0"	4.95
6'-6"	2.65	15'-6"	5.32
7'-0"	2.78	16'-0"	5.70
7'-6"	3.18	16'-6"	6.11
		17'-6"	6.15

1.5:1 Slope Wingwalls Type II

N1 OR N2 (FT.)	$q_{r,min.}$ (ksf)	N1 OR N2 (FT.)	$q_{r,min.}$ (ksf)
3'-0"	0.55	8'-0"	4.26
4'-0"	1.50	8'-6"	4.35
4'-3"	1.68	9'-0"	4.64
4'-6"	1.88	9'-6"	4.93
4'-9"	2.08	10'-0"	5.04
5'-0"	2.28	10'-6"	5.49
5'-3"	2.49	11'-0"	5.83
5'-6"	2.71	11'-6"	5.93
5'-9"	2.93	12'-0"	6.04
6'-0"	3.15	12'-6"	6.16
6'-6"	3.61	13'-0"	6.28
7'-0"	3.70	13'-3"	6.51
7'-6"	4.17	14'-0"	6.53
		15'-0"	6.48

A COPY OF THE ORIGINAL SEALED AND SIGNED DRAWING IS ON FILE IN THE CENTRAL OFFICE.

SPECIFICATION REFERENCE	NOTES TO DESIGNER BOX CULVERTS AND WINGS VIRGINIA DEPARTMENT OF TRANSPORTATION	VDOT ROAD AND BRIDGE STANDARDS	
		REVISION DATE	SHEET 1 OF 1
		07/12	1000.05

STANDARD

THIS PAGE INTENTIONALLY LEFT BLANK

VDOT
ROAD AND BRIDGE STANDARDS

SHEET 1 OF 1

REVISION DATE

TITLE

VIRGINIA DEPARTMENT OF TRANSPORTATION

SPECIFICATION REFERENCE

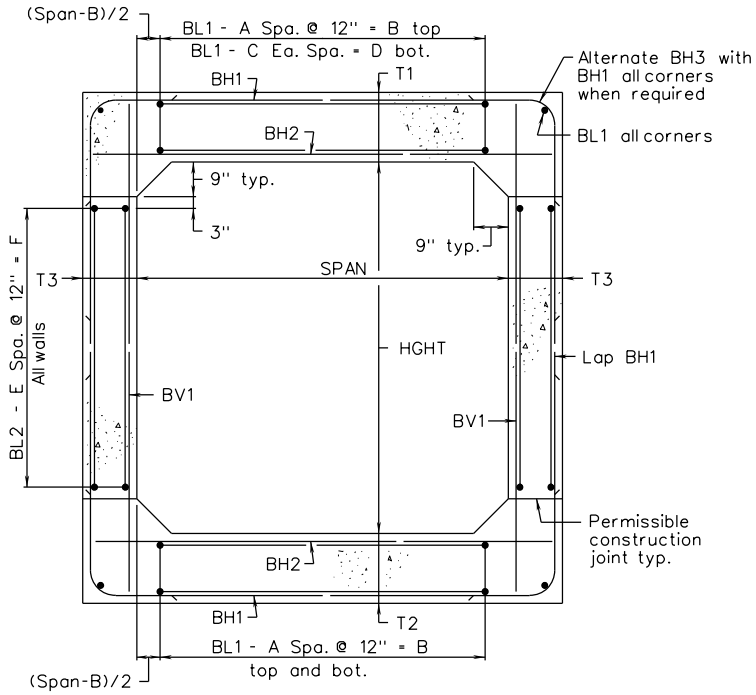

TYPICAL SECTION

GENERAL NOTES:

Capacity: AASHTO HL-93 Loading

Specifications:

Construction: Virginia Department of Transportation Road and Bridge Specifications.

Design: AASHTO LRFD Bridge Design Specifications, 5th Edition 2010; 2011 Interim Specifications; and VDOT Modifications.

All concrete shall be Class A4.

Deformed reinforcing bars shall conform to ASTM A615, Grade 60. All reinforcing bar dimensions on the detailed drawings are to centers of bars except where otherwise noted and are subject to fabrication and construction tolerances.

Construction joints shall be constructed and bonded in accordance with the current VDOT Road and Bridge Specifications.

Barrels more than 35' in length shall be poured in sections by providing vertical construction joints, not exceeding 25' between joints nor more than 30' from ends of barrels.

** Bars BH1 and BH3 shall have a pin diameter of 24 bar diameters.

Dimensions on bar diagrams are out-to-out of bars. Bars are straight unless otherwise shown.

The number of BL1 and BL2 bars shown in the table is the number of longitudinal bars shown in the typical section and may not equal the total number of bars required. BL1 and BL2 bars shall have a lap of 30 bar diameters at splices. At construction joints, first placed bars shall project 30 bar diameters beyond the joint. Estimated QUAN./LF shown for reinforcing steel does not include the quantity for laps of BL1 and BL2 bars. The additional weight per longitudinal lap is shown in the table.

The minimum cover of main reinforcing bars shall be 2½" from the face of the concrete for culverts under 0 to 2 foot fills and shall be 2" from the face of the concrete for all other culverts.

All reinforcing steel for culverts under 0 to 2 foot fills shall be low carbon/chromium reinforcing steel conforming to ASTM A1035.

At the Contractor's option, BV1 bars may be spliced at the permissible construction joint in order to facilitate construction. No additional compensation shall be provided for the increase in reinforcing steel quantity due to the splices.

Headwall quantities shown assume wingwalls are to be built at a 45° angle to the headwall.

The designs are applicable to the fill height and other conditions indicated. Any change in the conditions invalidates these designs.

Wingwalls referenced by letter apply when the acceptable foundation level is the same for both box and wings. If foundation levels are different, the height of the wingwall shall be adjusted by selection of another lettered wingwall of the appropriate height. For wingwall details, refer to standard series BCW for the appropriate fill slope.

For details of extending existing boxes, refer to standard BCE-01.

For modification of details for skewed culverts, see the skewed box details included in the road plans.

This standard shall be used with the BCB standard series.

A COPY OF THE ORIGINAL SEALED AND SIGNED DRAWING IS ON FILE IN THE CENTRAL OFFICE.

SPECIFICATION REFERENCE	OVERSIZE BOX CULVERTS STANDARD DETAILS VIRGINIA DEPARTMENT OF TRANSPORTATION	VDOT ROAD AND BRIDGE STANDARDS REVISION DATE 07/12	SHEET 1 OF 2 1001.01

BCB-DT

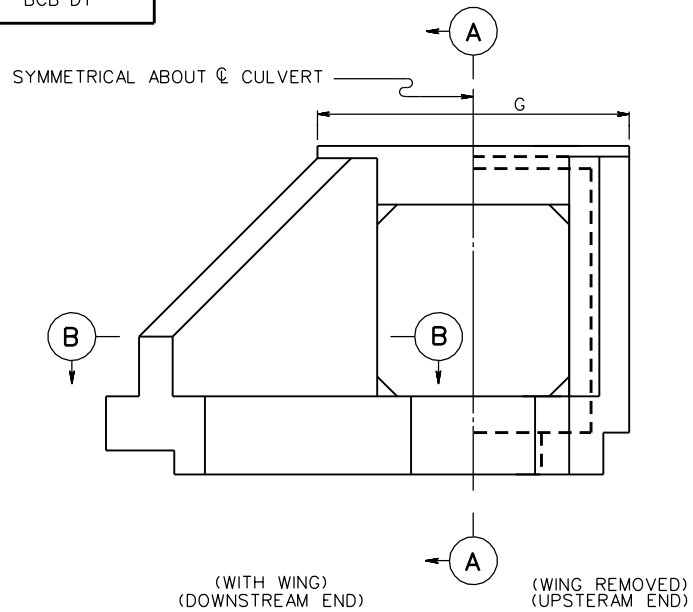

END ELEVATION

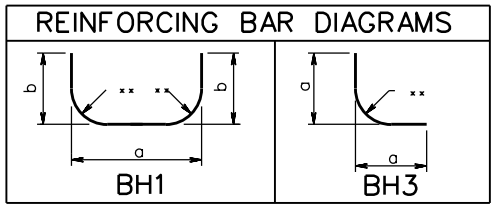

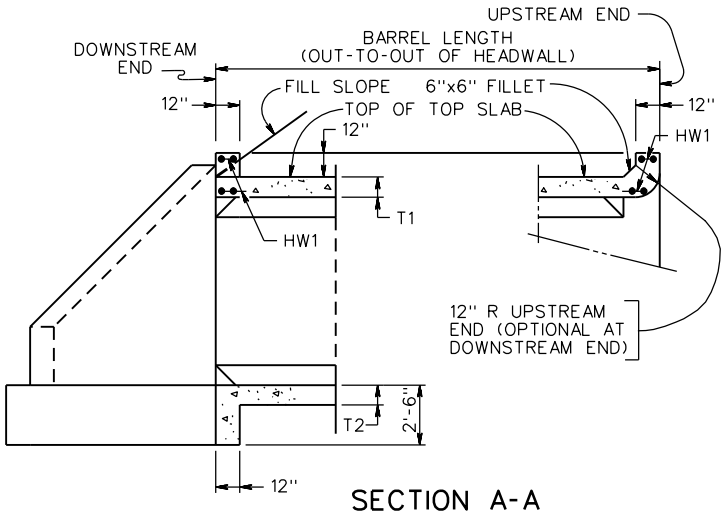

SECTION A-A
(With Wing)

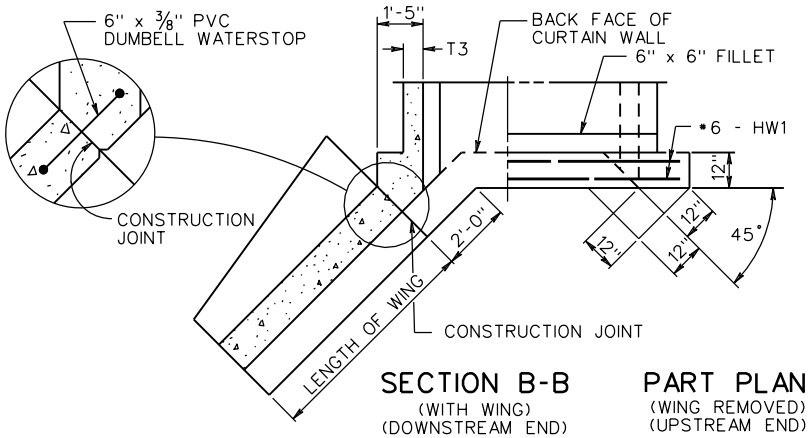

SECTION B-B
(WITH WING)
(DOWNSTREAM END)

PART PLAN
(WING REMOVED)
(UPSTREAM END)

VDOT
ROAD AND BRIDGE STANDARDS

SHEET 2 OF 2

1001.02

REVISION DATE
07/11

OVERSIZED BOX CULVERT

STANDARD DETAILS

VIRGINIA DEPARTMENT OF TRANSPORTATION

SPECIFICATION REFERENCE

FOR TYPICAL SECTION, NOTES AND OTHER DETAILS, REFER TO STANDARD BCB-DT.

DIMENSIONS											REINFORCING STEEL																
SPAN	HGHT	T1	T2	T3							BH1					BH2			BH3				BV1				
(FT.)	(FT.)	TOP SLAB (IN.)	BOTTOM SLAB (IN.)	WALL (IN.)	A	B	C	D	E	F	SIZE	SPACING c-c	a	b	LENGTH	SIZE	SPACING c-c	LENGTH	SIZE	SPACING c-c	a	LENGTH	SIZE	SPACING c-c	LENGTH	NO. BL1 #4 BARS	NO. BL2 #3 BARS
12	14	10¾"	10¾"	8"	11	11'-0"	22	11'-0"	12	12'-0"	5	7"	13'-0"	8'-4¾"	29'-2"	8	7"	13'-0"	4	7"	4'-6½"	8'-10"	5	8½"	15'-5"	63	52
12	16	11¾"	11¾"	8¼"	11	11'-0"	22	11'-0"	14	14'-0"	6	6"	13'-½"	9'-9¼"	31'-10"	8	6"	13'-0"	--	---	-----	-----	5	5½"	17'-8"	63	60
14	8	10¾"	10¾"	8"	13	13'-0"	26	13'-0"	6	6'-0"	5	7"	15'-0"	5'-4¾"	25'-2"	7	7"	15'-0"	4	7"	4'-3⅝"	8'-4"	4	12"	9'-5"	73	28
14	10	11"	11"	8"	13	13'-0"	26	13'-0"	8	8'-0"	5	8½"	15'-0"	6'-5"	27'-2"	8	8½"	15'-0"	4	8½"	4'-3⅝"	8'-4"	4	12"	11'-6"	73	36
14	12	11"	11"	8"	13	13'-0"	26	13'-0"	10	10'-0"	5	7½"	15'-0"	7'-5"	29'-2"	8	7½"	15'-0"	4	7½"	4'-3⅝"	8'-4"	5	12"	13'-6"	73	44
14	14	11½"	11½"	8"	13	13'-0"	26	13'-0"	12	12'-0"	6	6½"	15'-0"	8'-9"	31'-9"	8	6½"	15'-0"	--	---	-----	-----	5	8"	15'-7"	73	52
14	16	12½"	12½"	8¼"	13	13'-0"	26	13'-0"	14	14'-0"	6	5½"	15'-½"	9'-10"	34'-0"	8	5½"	15'-0"	--	---	-----	-----	6	9"	17'-9"	73	60

			QUAN./LF		HEADWALLS							
SPAN	HGHT				G	HW1						
(FT.)	(FT.)	REINFORCING STEEL (LBS/LONG. JT)	CONCRETE CLASS A4 (CY/LF)	REINFORCING STEEL (LBS/LF)	HEADWALL LENGTH	SIZE	LENGTH	INLET CONCRETE CL.A4 (CY)	INLET REINFORCING STEEL (LBS)	OUTLET CONCRETE CL. A4 (CY)	OUTLET REINFORCING STEEL (LBS)	WINGWALL
12	14	70.961	1.591	376.903	14'-10"	6	14'-6"	2.927	87.116	2.961	87.116	X
12	16	73.785	1.793	479.298	14'-10"	6	14'-6"	3.064	87.116	3.097	87.116	BB
14	8	70.839	1.431	305.160	16'-10"	6	16'-6"	2.557	99.132	2.597	99.132	L
14	10	73.663	1.554	302.186	16'-10"	6	16'-6"	2.735	99.132	2.775	99.132	P
14	12	76.487	1.649	360.576	16'-10"	6	16'-6"	2.920	99.132	2.961	99.132	T
14	14	79.311	1.790	445.148	16'-10"	6	16'-6"	3.092	99.132	3.132	99.132	X
14	16	82.135	2.004	543.465	16'-10"	6	16'-6"	3.222	99.132	3.262	99.132	BB

A COPY OF THE ORIGINAL SEALED AND SIGNED DRAWING IS ON FILE IN THE CENTRAL OFFICE.

SPECIFICATION REFERENCE

OVERSIZE BOX CULVERTS

0 TO 2 FT. FILLS

VIRGINIA DEPARTMENT OF TRANSPORTATION

VDOT

ROAD AND BRIDGE STANDARDS

REVISION DATE 07/11

SHEET 1 OF 1

1001.03

BCB-05

FOR TYPICAL SECTION, NOTES AND OTHER DETAILS, REFER TO STANDARD BCB-DT.

DIMENSIONS											REINFORCING STEEL																
SPAN	HGHT	T1	T2	T3							BH1					BH2			BH3				BV1				
(FT.)	(FT.)	TOP SLAB (IN.)	BOTTOM SLAB (IN.)	WALL (IN.)	A	B	C	D	E	F	SIZE	SPACING c-c	a	b	LENGTH	SIZE	SPACING c-c	LENGTH	SIZE	SPACING c-c	a	LENGTH	SIZE	SPACING c-c	LENGTH	NO. BL1 #4 BARS	NO. BL2 #3 BARS
12	14	11"	11"	8"	11	11'-0"	11	11'-0"	12	12'-0"	5	7"	13'-0"	8'-5"	29'-2"	8	7"	13'-0"	4	7"	4'-6½"	8'-10"	6	8½"	15'-6"	52	52
12	16	12¼"	12¼"	8½"	11	11'-0"	11	11'-0"	14	14'-0"	6	6½"	13'-1"	9'-10"	31'-11"	8	6½"	13'-0"	4	6½"	5'-1"	9'-11"	6	6"	17'-9"	52	60
14	8	10¼"	10¼"	8"	13	13'-0"	13	13'-0"	6	6'-0"	5	6"	15'-0"	5'-4¼"	25'-1"	7	6"	15'-0"	--	---	-----	-----	4	7½"	9'-5"	60	28
14	10	10¼"	10¼"	8"	13	13'-0"	13	13'-0"	8	8'-0"	6	7"	15'-0"	6'-4¼"	26'-11"	8	7"	15'-0"	--	---	-----	-----	4	7½"	11'-5"	60	36
14	12	10½"	10½"	8"	13	13'-0"	13	13'-0"	10	10'-0"	5	5½"	15'-0"	7'-4½"	29'-1"	7	5½"	15'-0"	--	---	-----	-----	5	10"	13'-5"	60	44
14	14	11½"	11½"	8½"	13	13'-0"	13	13'-0"	12	12'-0"	5	6½"	15'-1"	8'-5½"	31'-3"	8	6½"	15'-0"	3	6½"	4'-7"	8'-11"	6	10"	15'-7"	60	52
14	16	12½"	12½"	8¾"	13	13'-0"	13	13'-0"	14	14'-0"	6	6"	15'-1"	9'-10"	34'-0"	8	6"	15'-1"	--	---	-----	-----	6	6"	17'-9"	60	60

			QUAN./LF		HEADWALLS							
SPAN	HGHT				G	HW1						
(FT.)	(FT.)	REINFORCING STEEL (LBS/LONG. JT)	CONCRETE CLASS A4 (CY/LF)	REINFORCING STEEL (LBS/LF)	HEADWALL LENGTH	SIZE	LENGTH	INLET CONCRETE CL.A4 (CY)	INLET REINFORCING STEEL (LBS)	OUTLET CONCRETE CL. A4 (CY)	OUTLET REINFORCING STEEL (LBS)	WINGWALL
12	14	61.776	1.610	386.454	14'-10"	6	14'-6"	2.922	87.116	2.956	87.116	X
12	16	64.600	1.856	521.464	14'-10"	6	14'-6"	3.053	87.116	3.086	87.116	BB
14	8	59.984	1.384	298.025	16'-10"	6	16'-6"	2.570	99.132	2.611	99.132	L
14	10	62.808	1.479	353.948	16'-10"	6	16'-6"	2.756	99.132	2.796	99.132	P
14	12	65.632	1.602	360.712	16'-10"	6	16'-6"	2.934	99.132	2.975	99.132	T
14	14	68.456	1.839	412.213	16'-10"	6	16'-6"	3.092	99.132	3.132	99.132	X
14	16	71.280	2.058	537.499	16'-10"	6	16'-6"	3.194	99.132	3.234	99.132	BB

A COPY OF THE ORIGINAL SEALED AND SIGNED DRAWING IS ON FILE IN THE CENTRAL OFFICE.

VDOT
ROAD AND BRIDGE STANDARDS

SHEET 1 OF 1
1001.04

REVISION DATE
07/11

OVERSIZE BOX CULVERTS

2 TO 5 FT. FILLS

VIRGINIA DEPARTMENT OF TRANSPORTATION

SPECIFICATION REFERENCE

FOR TYPICAL SECTION, NOTES AND OTHER DETAILS, REFER TO STANDARD BCB-DT.

DIMENSIONS											REINFORCING STEEL																
SPAN	HGHT	T1	T2	T3							BH1					BH2			BH3				BV1				
(FT.)	(FT.)	TOP SLAB (IN.)	BOTTOM SLAB (IN.)	WALL (IN.)	A	B	C	D	E	F	SIZE	SPACING c-c	a	b	LENGTH	SIZE	SPACING c-c	LENGTH	SIZE	SPACING c-c	a	LENGTH	SIZE	SPACING c-c	LENGTH	NO. BL1 #4 BARS	NO. BL2 #3 BARS
12	14	11½"	11½"	9"	11	11'-0"	11	11'-0"	12	12'-0"	5	6½"	13'-2"	8'-5½"	29'-5"	8	6½"	13'-2"	4	6½"	4'-7"	8'-11"	6	7½"	15'-7"	52	52
12	16	12"	12"	10½"	11	11'-0"	11	11'-0"	14	14'-0"	6	6"	13'-5"	9'-9½"	32'-4"	8	6"	13'-5"	--	---	-----	-----	6	6"	17'-8"	52	60
14	8	11¾"	11¾"	8"	13	13'-0"	13	13'-0"	6	6'-0"	6	6½"	15'-0"	5'-9½"	25'-10"	8	6½"	15'-0"	--	---	-----	-----	4	6"	9'-8"	60	28
14	10	11¾"	11¾"	8"	13	13'-0"	13	13'-0"	8	8'-0"	5	6"	15'-0"	6'-5¾"	27'-4"	8	6"	15'-0"	3	6"	4'-3⅝"	8'-5"	4	6"	11'-8"	60	36
14	12	12"	12"	8"	13	13'-0"	13	13'-0"	10	10'-0"	5	6"	15'-0"	7'-6"	29'-4"	8	6"	15'-0"	3	6"	4'-3⅝"	8'-5"	6	12"	13'-8"	60	44
14	14	12½"	12½"	9½"	13	13'-0"	13	13'-0"	12	12'-0"	5	5½"	15'-3"	8'-6½"	31'-8"	8	5½"	15'-3"	3	5½"	4'-8"	9'-1"	7	12"	15'-9"	60	52
14	16	12¾"	12¾"	10½"	13	13'-0"	13	13'-0"	14	14'-0"	6	5½"	15'-5"	9'-10"	34'-3"	8	5½"	15'-5"	--	---	-----	-----	6	7"	17'-9"	60	60

			QUAN./LF		HEADWALLS							
SPAN	HGHT				G	HW1						
(FT.)	(FT.)	REINFORCING STEEL (LBS/LONG. JT)	CONCRETE CLASS A4 (CY/LF)	REINFORCING STEEL (LBS/LF)	HEADWALL LENGTH	SIZE	LENGTH	INLET CONCRETE CL.A4 (CY)	INLET REINFORCING STEEL (LBS)	OUTLET CONCRETE CL. A4 (CY)	OUTLET REINFORCING STEEL (LBS)	WINGWALL
12	14	61.776	1.746	421.454	14'-10"	6	14'-6"	2.911	87.116	2.945	87.116	X
12	16	64.600	2.059	503.510	14'-10"	6	14'-6"	3.003	87.116	3.036	87.116	BB
14	8	59.984	1.521	363.885	16'-10"	6	16'-6"	2.529	99.132	2.569	99.132	L
14	10	62.808	1.619	384.341	16'-10"	6	16'-6"	2.714	99.132	2.754	99.132	P
14	12	65.632	1.741	410.358	16'-10"	6	16'-6"	2.893	99.132	2.933	99.132	T
14	14	68.456	2.029	478.737	16'-10"	6	16'-6"	3.064	99.132	3.105	99.132	X
14	16	71.280	2.276	561.097	16'-10"	6	16'-6"	3.187	99.132	3.227	99.132	BB

A COPY OF THE ORIGINAL SEALED AND SIGNED DRAWING IS ON FILE IN THE CENTRAL OFFICE.

SPECIFICATION REFERENCE

OVERSIZE BOX CULVERTS

5 TO 10 FT. FILLS

VIRGINIA DEPARTMENT OF TRANSPORTATION

VDOT

ROAD AND BRIDGE STANDARDS

REVISION DATE 07/11

SHEET 1 OF 1

1001.05

BCB-20

FOR TYPICAL SECTION, NOTES AND OTHER DETAILS, REFER TO STANDARD BCB-DT.

DIMENSIONS											REINFORCING STEEL																
SPAN	HGHT	T1	T2	T3							BH1					BH2			BH3				BV1				
(FT.)	(FT.)	TOP SLAB (IN.)	BOTTOM SLAB (IN.)	WALL (IN.)	A	B	C	D	E	F	SIZE	SPACING c-c	a	b	LENGTH	SIZE	SPACING c-c	LENGTH	SIZE	SPACING c-c	a	LENGTH	SIZE	SPACING c-c	LENGTH	NO. BL1 #4 BARS	NO. BL2 #3 BARS
12	14	15"	15"	11½"	11	11'-0"	11	11'-0"	12	12'-0"	6	6"	13'-7"	9'-2"	31'-0"	8	6"	13'-6"	--	---	-----	-----	7	9"	16'-2"	52	52
12	16	15¼"	15¼"	13"	11	11'-0"	11	11'-0"	14	14'-0"	6	5½"	13'-10"	10'-2"	33'-3"	8	5½"	13'-9"	3	5½"	5'-4"	10'-5"	8	11"	18'-2"	52	60
14	8	16¾"	16¾"	8"	13	13'-0"	13	13'-0"	6	6'-0"	4	5½"	15'-0"	5'-11"	26'-4"	8	5½"	15'-0"	4	5½"	4'-4"	8'-5"	4	11"	10'-5"	60	28
14	10	16¾"	16¾"	8"	13	13'-0"	13	13'-0"	8	8'-0"	5	5"	15'-0"	7'-1"	28'-6"	8	5"	15'-0"	--	---	-----	-----	5	5"	12'-5"	60	36
14	12	16¾"	16¾"	9½"	13	13'-0"	13	13'-0"	10	10'-0"	5	5"	15'-3"	8'-1"	30'-9"	8	5"	15'-3"	--	---	-----	-----	6	10"	14'-5"	60	44
14	14	16¾"	16¾"	11"	13	13'-0"	13	13'-0"	12	12'-0"	5	5"	15'-6"	9'-1"	33'-0"	8	5"	15'-6"	4	5"	5'-1"	9'-10"	7	10"	16'-5"	60	52
14	16	17"	17"	13½"	13	13'-0"	13	13'-0"	14	14'-0"	6	5"	15'-11"	10'-4"	35'-8"	8	5"	15'-11"	--	---	-----	-----	7	9"	18'-6"	60	60

			QUAN./LF		HEADWALLS							
SPAN	HGHT				G	HW1						
(FT.)	(FT.)	REINFORCING STEEL (LBS/LONG. JT)	CONCRETE CLASS A4 (CY/LF)	REINFORCING STEEL (LBS/LF)	HEADWALL LENGTH	SIZE	LENGTH	INLET CONCRETE CL.A4 (CY)	INLET REINFORCING STEEL (LBS)	OUTLET CONCRETE CL. A4 (CY)	OUTLET REINFORCING STEEL (LBS)	WINGWALL
12	14	61.776	2.287	480.799	14'-10"	6	14'-6"	2.810	87.116	2.844	87.116	X
12	16	64.600	2.614	583.945	14'-10"	6	14'-6"	2.835	87.116	2.868	87.116	CC
14	8	59.984	1.993	374.438	16'-10"	6	16'-6"	2.408	99.132	2.449	99.132	M
14	10	62.808	2.086	459.403	16'-10"	6	16'-6"	2.594	99.132	2.634	99.132	Q
14	12	65.632	2.321	466.628	16'-10"	6	16'-6"	2.779	99.132	2.820	99.132	U
14	14	68.456	2.585	575.524	16'-10"	6	16'-6"	2.913	99.132	2.953	99.132	Y
14	16	71.280	3.032	632.963	16'-10"	6	16'-6"	2.970	99.132	3.009	99.132	CC

A COPY OF THE ORIGINAL SEALED AND SIGNED DRAWING IS ON FILE IN THE CENTRAL OFFICE

VDOT
ROAD AND BRIDGE STANDARDS

SHEET 1 OF 1
1001.06

REVISION DATE
07/11

OVERSIZE BOX CULVERTS

10 TO 20 FT. FILLS

VIRGINIA DEPARTMENT OF TRANSPORTATION

SPECIFICATION REFERENCE

FOR TYPICAL SECTION, NOTES AND OTHER DETAILS, REFER TO STANDARD BCB-DT.

DIMENSIONS											REINFORCING STEEL																
SPAN	HGHT	T1	T2	T3							BH1					BH2			BH3				BV1				
(FT.)	(FT.)	TOP SLAB (IN.)	BOTTOM SLAB (IN.)	WALL (IN.)	A	B	C	D	E	F	SIZE	SPACING c-c	a	b	LENGTH	SIZE	SPACING c-c	LENGTH	SIZE	SPACING c-c	a	LENGTH	SIZE	SPACING c-c	LENGTH	NO. BL1 #4 BARS	NO. BL2 #3 BARS
12	14	19½"	19½"	12½"	11	11'-0"	11	11'-0"	12	12'-0"	5	5½"	13'-9"	9'-4"	31'-9"	8	5½"	13'-9"	4	5½"	5'-4"	10'-4"	7	8"	16'-11"	52	52
12	16	19½"	19½"	15"	11	11'-0"	11	11'-0"	14	14'-0"	6	5½"	14'-2"	10'-6"	34'-4"	8	5½"	14'-1"	3	5½"	5'-8"	11'-2"	8	10"	18'-11"	52	60
14	8	22½"	22½"	8"	13	13'-0"	13	13'-0"	6	6'-0"	4	5"	15'-0"	6'-5"	27'-3"	8	5"	15'-0"	--	---	-----	-----	5	12"	11'-4"	60	28
14	10	22¾"	22¾"	8"	13	13'-0"	13	13'-0"	8	8'-0"	4	5"	15'-0"	7'-5"	29'-4"	8	5"	15'-0"	3	5"	4'-9"	9'-4"	5	6½"	13'-5"	60	36
14	12	22¾"	22¾"	10½"	13	13'-0"	13	13'-0"	10	10'-0"	5	4½"	15'-5"	8'-7"	31'-11"	8	4½"	15'-4"	--	---	-----	-----	6	9"	15'-5"	60	44
14	14	22¾"	22¾"	12½"	13	13'-0"	13	13'-0"	12	12'-0"	5	5"	15'-9"	9'-7"	34'-3"	8	5"	15'-8"	3	5"	5'-7"	10'-11"	5	5"	17'-5"	60	52
14	16	22¾"	22¾"	15"	13	13'-0"	13	13'-0"	14	14'-0"	6	4½"	16'-2"	10'-9"	36'-10"	8	4½"	16'-2"	--	---	-----	-----	7	9"	19'-5"	60	60

			QUAN./LF		HEADWALLS							
SPAN	HGHT				G	HW1						
(FT.)	(FT.)	REINFORCING STEEL (LBS/LONG. JT)	CONCRETE CLASS A4 (CY/LF)	REINFORCING STEEL (LBS/LF)	HEADWALL LENGTH	SIZE	LENGTH	INLET CONCRETE CL.A4 (CY)	INLET REINFORCING STEEL (LBS)	OUTLET CONCRETE CL. A4 (CY)	OUTLET REINFORCING STEEL (LBS)	WINGWALL
12	14	61.776	2.776	529.473	14'-10"	6	14'-6"	2.572	87.116	2.604	87.116	Y
12	16	64.600	3.221	612.127	14'-10"	6	14'-6"	2.588	87.116	2.620	87.116	CC
14	8	59.984	2.538	362.624	16'-10"	6	16'-6"	2.267	99.132	2.308	99.132	N
14	10	62.808	2.655	433.615	16'-10"	6	16'-6"	2.446	99.132	2.486	99.132	R
14	12	65.632	2.991	524.087	16'-10"	6	16'-6"	2.607	99.132	2.647	99.132	V
14	14	68.456	3.337	568.048	16'-10"	6	16'-6"	2.653	99.132	2.692	99.132	Z
14	16	71.280	3.786	702.626	16'-10"	6	16'-6"	2.638	99.132	2.676	99.132	DD

A COPY OF THE ORIGINAL SEALED AND SIGNED DRAWING IS ON FILE IN THE CENTRAL OFFICE

SPECIFICATION REFERENCE

OVERSIZE BOX CULVERTS

20 TO 30 FT. FILLS

VIRGINIA DEPARTMENT OF TRANSPORTATION

VDOT

ROAD AND BRIDGE STANDARDS

REVISION DATE 07/11

SHEET 1 OF 1

1001.07

BCB-40

FOR TYPICAL SECTION, NOTES AND OTHER DETAILS, REFER TO STANDARD BCB-DT.

DIMENSIONS											REINFORCING STEEL																
SPAN	HGHT	T1	T2	T3							BH1					BH2			BH3				BV1				
(FT.)	(FT.)	TOP SLAB (IN.)	BOTTOM SLAB (IN.)	WALL (IN.)	A	B	C	D	E	F	SIZE	SPACING C-C	a	b	LENGTH	SIZE	SPACING C-C	LENGTH	SIZE	SPACING C-C	a	LENGTH	SIZE	SPACING C-C	LENGTH	NO. BL1 #4 BARS	NO. BL2 #3 BARS
12	14	22¾"	22¾"	14"	11	11'-0"	11	11'-0"	12	12'-0"	5	5"	14'-0"	9'-7"	32'-6"	8	5"	14'-0"	4	5"	5'-7"	10'-10"	8	10"	17'-5"	52	52
12	16	22¾"	22¾"	17"	11	11'-0"	11	11'-0"	14	14'-0"	6	5"	14'-6"	10'-9"	35'-2"	8	5"	14'-6"	3	5"	6'-0"	11'-8"	6	5"	19'-5"	52	60
14	8	27¾"	27¾"	9"	13	13'-0"	13	13'-0"	6	6'-0"	4	4½"	15'-2"	6'-10"	28'-4"	8	4½"	15'-1"	--	---	-----	-----	5	9"	12'-3"	60	28
14	10	27¾"	27¾"	8½"	13	13'-0"	13	13'-0"	8	8'-0"	4	4½"	15'-1"	7'-10"	30'-3"	8	4½"	15'-0"	--	---	-----	-----	7	9"	14'-3"	60	36
14	12	27¾"	27¾"	11½"	13	13'-0"	13	13'-0"	10	10'-0"	5	4½"	15'-7"	9'-0"	32'-11"	8	4½"	15'-6"	--	---	-----	-----	5	4½"	16'-3"	60	44
14	14	27¾"	27¾"	14"	13	13'-0"	13	13'-0"	12	12'-0"	6	4½"	16'-0"	10'-2"	35'-6"	8	4½"	16'-0"	--	---	-----	-----	5	4½"	18'-3"	60	52
14	16	27¾"	27¾"	16½"	13	13'-0"	13	13'-0"	14	14'-0"	5	4½"	16'-5"	11'-0"	37'-9"	8	4½"	16'-5"	4	4½"	6'-5"	12'-6"	8	9"	20'-3"	60	60

			QUAN./LF		HEADWALLS							
SPAN	HGHT				G	HW1						
(FT.)	(FT.)	REINFORCING STEEL (LBS/LONG. JT)	CONCRETE CLASS A4 (CY/LF)	REINFORCING STEEL (LBS/LF)	HEADWALL LENGTH	SIZE	LENGTH	INLET CONCRETE CL.A4 (CY)	INLET REINFORCING STEEL (LBS)	OUTLET CONCRETE CL. A4 (CY)	OUTLET REINFORCING STEEL (LBS)	WINGWALL
12	14	61.776	3.219	584.665	14'-10"	6	14'-6"	2.351	87.116	2.382	87.116	Z
12	16	64.600	3.751	686.358	14'-10"	6	14'-6"	2.314	87.116	2.344	87.116	DD
14	8	59.984	3.110	410.138	16'-10"	6	16'-6"	2.063	99.132	2.103	99.132	O
14	10	62.808	3.172	462.500	16'-10"	6	16'-6"	2.281	99.132	2.321	99.132	S
14	12	65.632	3.577	560.733	16'-10"	6	16'-6"	2.315	99.132	2.354	99.132	W
14	14	68.456	3.997	682.253	16'-10"	6	16'-6"	2.333	99.132	2.371	99.132	AA
14	16	71.280	4.483	747.896	16'-10"	6	16'-6"	2.281	99.132	2.318	99.132	EE

A COPY OF THE ORIGINAL SEALED AND SIGNED DRAWING IS ON FILE IN THE CENTRAL OFFICE

VDOT
ROAD AND BRIDGE STANDARDS

SHEET 1 OF 1
1001.08

REVISION DATE
07/11

OVERSIZE BOX CULVERTS

30 TO 40 FT. FILLS

VIRGINIA DEPARTMENT OF TRANSPORTATION

SPECIFICATION REFERENCE

FOR TYPICAL SECTION, NOTES AND OTHER DETAILS, REFER TO STANDARD BCB-DT.

BCB-50

DIMENSIONS											REINFORCING STEEL																
SPAN	HGHT	T1	T2	T3							BH1					BH2			BH3				BV1				
(FT.)	(FT.)	TOP SLAB (IN.)	BOTTOM SLAB (IN.)	WALL (IN.)	A	B	C	D	E	F	SIZE	SPACING c-c	a	b	LENGTH	SIZE	SPACING c-c	LENGTH	SIZE	SPACING c-c	a	LENGTH	SIZE	SPACING c-c	LENGTH	NO. BL1 #4 BARS	NO. BL2 #3 BARS
12	14	27½"	27½"	15½"	11	11'-0"	11	11'-0"	12	12'-0"	5	5"	14'-3"	10'-0"	33'-7"	8	5"	14'-3"	4	5"	6'-0"	11'-8"	8	10"	18'-3"	52	52
12	16	27¾"	27¾"	18½"	11	11'-0"	11	11'-0"	14	14'-0"	6	4½"	14'-9"	11'-2"	36'-3"	9	4½"	14'-9"	3	4½"	6'-5"	12'-6"	8	9"	20'-3"	52	60
14	8	31½"	31½"	11¾"	13	13'-0"	13	13'-0"	6	6'-0"	4	4½"	15'-7½"	7'-2"	29'-5"	9	4½"	15'-7"	--	---	-----	-----	4	9"	12'-11"	60	28
14	10	31½"	31½"	10¾"	13	13'-0"	13	13'-0"	8	8'-0"	4	4½"	15'-5½"	8'-2"	31'-3"	9	4½"	15'-5"	--	---	-----	-----	5	4½"	14'-11"	60	36
14	12	31¼"	31¼"	11½"	13	13'-0"	13	13'-0"	10	10'-0"	4	4½"	15'-7"	9'-2"	33'-4"	9	4½"	15'-6"	4	4½"	5'-11"	11'-5"	7	8"	16'-10"	60	44
14	14	31¼"	31¼"	15"	13	13'-0"	13	13'-0"	12	12'-0"	5	4½"	16'-2"	10'-4"	36'-1"	9	4½"	16'-2"	3	4½"	6'-3"	12'-4"	7	7"	18'-10"	60	52
14	16	31¼"	31¼"	17½"	13	13'-0"	13	13'-0"	14	14'-0"	6	4½"	16'-7"	11'-6"	38'-8"	9	4½"	16'-7"	4	4½"	6'-8"	13'-1"	6	4½"	20'-10"	60	60

			QUAN./LF		HEADWALLS							
SPAN	HGHT				G	HW1						
(FT.)	(FT.)	REINFORCING STEEL (LBS/LONG. JT)	CONCRETE CLASS A4 (CY/LF)	REINFORCING STEEL (LBS/LF)	HEADWALL LENGTH	SIZE	LENGTH	INLET CONCRETE CL.A4 (CY)	INLET REINFORCING STEEL (LBS)	OUTLET CONCRETE CL. A4 (CY)	OUTLET REINFORCING STEEL (LBS)	WINGWALL
12	14	61.776	3.810	603.234	14'-10"	6	14'-6"	2.080	87.116	2.110	87.116	AA
12	16	64.600	4.390	817.047	14'-10"	6	14'-6"	1.979	87.116	2.008	87.116	EE
14	8	59.984	3.689	470.179	16'-10"	6	16'-6"	1.732	99.132	1.770	99.132	O
14	10	62.808	3.735	536.664	16'-10"	6	16'-6"	1.965	99.132	2.003	99.132	S
14	12	65.632	3.914	651.161	16'-10"	6	16'-6"	2.071	99.132	2.109	99.132	W
14	14	68.456	4.464	743.491	16'-10"	6	16'-6"	2.010	99.132	2.047	99.132	AA
14	16	71.280	4.961	941.671	16'-10"	6	16'-6"	1.939	99.132	1.974	99.132	EE

A COPY OF THE ORIGINAL SEALED AND SIGNED DRAWING IS ON FILE IN THE CENTRAL OFFICE

SPECIFICATION REFERENCE

OVERSIZE BOX CULVERTS

40 TO 50 FT. FILLS

VIRGINIA DEPARTMENT OF TRANSPORTATION

VDOT

ROAD AND BRIDGE STANDARDS

REVISION DATE 07/11

SHEET 1 OF 1

1001.09

BCS-DT

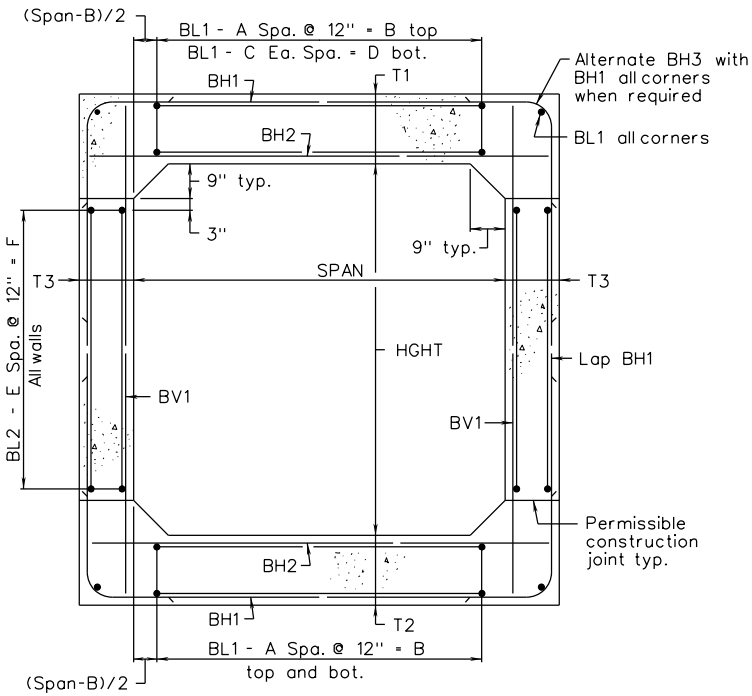

TYPICAL SECTION

GENERAL NOTES:

Capacity: AASHTO HL-93 Loading

Specifications:

Construction: Virginia Department of Transportation Road and Bridge Specifications.

Design: AASHTO LRFD Bridge Design Specifications, 5th Edition 2010; 2011 Interim Specifications; and VDOT Modifications.

All concrete shall be Class A4.

Deformed reinforcing bars shall conform to ASTM A615, Grade 60. All reinforcing bar dimensions on the detailed drawings are to centers of bars except where otherwise noted and are subject to fabrication and construction tolerances.

Construction joints shall be constructed and bonded in accordance with the current VDOT Road and Bridge Specifications.

Barrels more than 35' in length shall be poured in sections by providing vertical construction joints, not exceeding 25' between joints nor more than 30' from ends of barrels.

** Bars BH1 and BH3 shall have a pin diameter of 24 bar diameters.

Dimensions on bar diagrams are out-to-out of bars. Bars are straight unless otherwise shown.

The number of BL1 and BL2 bars shown in the table is the number of longitudinal bars shown in the typical section and may not equal the total number of bars required. BL1 and BL2 bars shall have a lap of 30 bar diameters at splices. At construction joints, first placed bars shall project 30 bar diameters beyond the joint. Estimated QUAN./LF shown for reinforcing steel does not include the quantity for laps of BL1 and BL2 bars. The additional weight per longitudinal lap is shown in the table.

The minimum cover of main reinforcing bars shall be 2½" from the face of the concrete for culverts under 0 to 2 foot fills and shall be 2" from the face of the concrete for all other culverts.

All reinforcing steel for culverts under 0 to 2 foot fills shall be low carbon/chromium reinforcing steel conforming to ASTM A1035.

At the Contractor's option, BV1 bars may be spliced at the permissible construction joint in order to facilitate construction. No additional compensation shall be provided for the increase in reinforcing steel quantity due to the splices.

Headwall quantities shown assume wingwalls are to be built at a 45° angle to the headwall.

The designs are applicable to the fill height and other conditions indicated. Any change in the conditions invalidates these designs.

Wingwalls referenced by letter apply when the acceptable foundation level is the same for both box and wings. If foundation levels are different, the height of the wingwall shall be adjusted by selection of another lettered wingwall of the appropriate height. For wingwall details, refer to standard series BCW for the appropriate fill slope.

For details of extending existing boxes, refer to standard BCE-01.

For modification of details for skewed culverts, see the skewed box details included in the road plans.

This standard shall be used with the BCS standard series.

A COPY OF THE ORIGINAL SEALED AND SIGNED DRAWING IS ON FILE IN THE CENTRAL OFFICE.

VDOT ROAD AND BRIDGE STANDARDS	SINGLE BOX CULVERTS STANDARD DETAILS VIRGINIA DEPARTMENT OF TRANSPORTATION	SPECIFICATION REFERENCE
SHEET 1 OF 2 / REVISION DATE		
1002.01 / 07/12		

BCS-DT

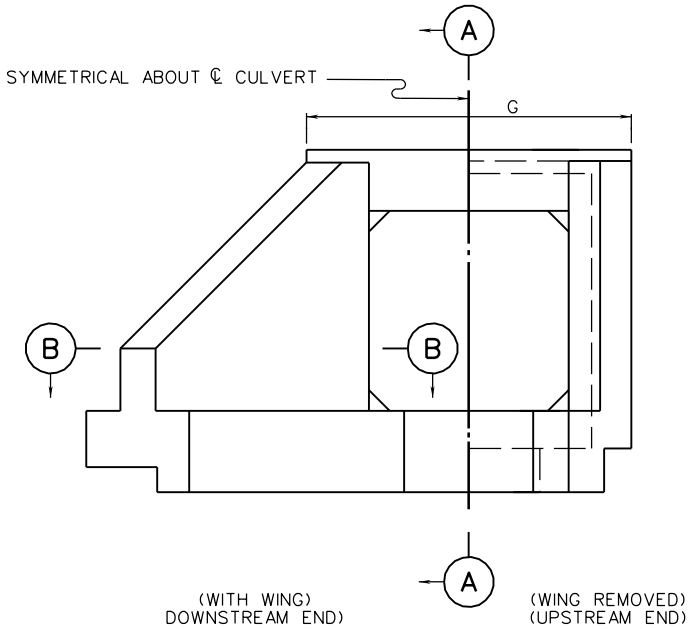

END ELEVATION

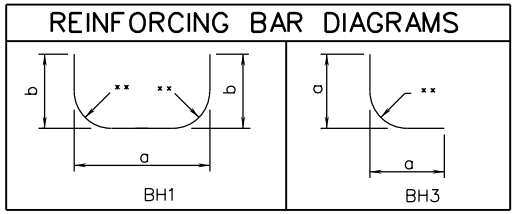

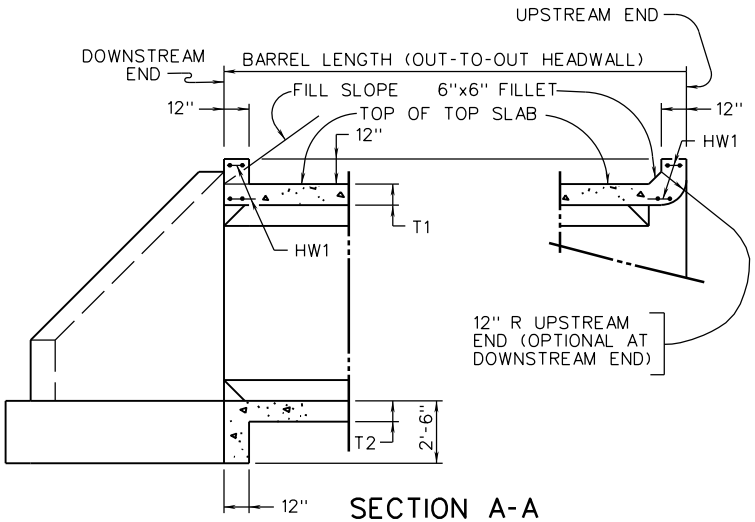

SECTION A-A

(WITH WING)

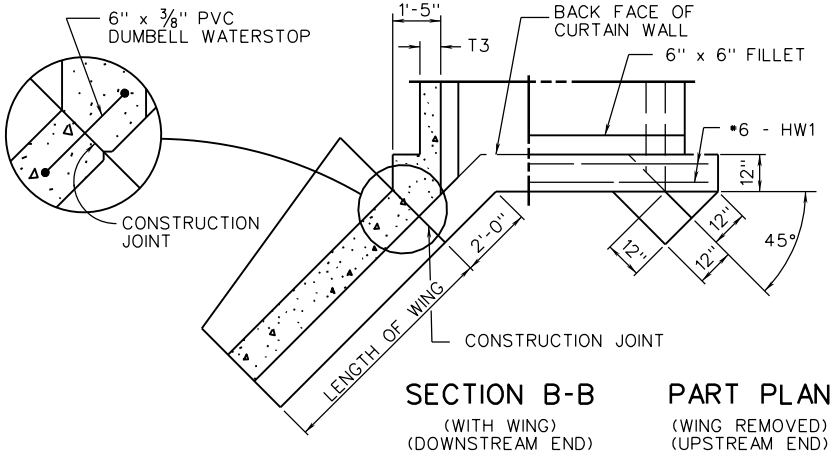

SECTION B-B

(WITH WING)
(DOWNSTREAM END)

PART PLAN

(WING REMOVED)
(UPSTREAM END)

SPECIFICATION REFERENCE	SINGLE BOX CULVERTS STANDARD DETAILS VIRGINIA DEPARTMENT OF TRANSPORTATION	VDOT ROAD AND BRIDGE STANDARDS	
		REVISION DATE 07/11	SHEET 2 OF 2 1002.02

BCS-02

FOR TYPICAL SECTION. NOTES AND OTHER DETAILS, REFER TO STANDARD BCS-DT.

DIMENSIONS					REINFORCING STEEL																						
SPAN	HGHT	T1	T2	T3							BH1					BH2			BH3				BV1				
(FT.)	(FT.)	TOP SLAB (IN.)	BOTTOM SLAB (IN.)	WALL (IN.)	A	B	C	D	E	F	SIZE	SPACING C-C	a	b	LENGTH	SIZE	SPACING C-C	LENGTH	SIZE	SPACING C-C	a	LENGTH	SIZE	SPACING C-C	LENGTH	NO. BL1 #4 BARS	NO. BL2 #3 BARS
3	3	8½"	8½"	8"	2	2'- 0"	4	2'- 0"	1	1'- 0"	4	12"	4'- 0"	2'- 8½"	8'-11"	5	12"	4'- 0"	4	12"	2'- 6"	4'- 9"	4	12"	4'- 1"	18	8
3	4	8½"	8½"	8"	2	2'- 0"	4	2'- 0"	2	2'- 0"	4	12"	4'- 0"	3'- 2½"	9'-11"	6	12"	4'- 0"	--	---	-----	-----	4	12"	5'- 1"	18	12
4	3	9"	9"	8"	3	3'- 0"	6	3'- 0"	1	1'- 0"	4	12"	5'- 0"	2'- 9"	10'- 0"	6	12"	5'- 0"	--	---	-----	-----	4	10½"	4'- 2"	23	8
4	4	9"	9"	8"	3	3'- 0"	6	3'- 0"	2	2'- 0"	4	12"	5'- 0"	3'- 3"	11'- 0"	6	12"	5'- 0"	--	---	-----	-----	4	12"	5'- 2"	23	12
4	5	9"	9"	8"	3	3'- 0"	6	3'- 0"	3	3'- 0"	4	12"	5'- 0"	3'- 9"	12'- 0"	6	12"	5'- 0"	--	---	-----	-----	4	12"	6'- 2"	23	16
4	6	9"	9"	8"	3	3'- 0"	6	3'- 0"	4	4'- 0"	4	11"	5'- 0"	4'- 3"	13'- 0"	6	11"	5'- 0"	--	---	-----	-----	4	12"	7'- 2"	23	20
5	3	9¼"	9¼"	8"	4	4'- 0"	8	4'- 0"	1	1'- 0"	4	11"	6'- 0"	2'- 9¼"	11'- 0"	6	11"	6'- 0"	--	---	-----	-----	4	12"	4'- 2"	28	8
5	4	9¼"	9¼"	8"	4	4'- 0"	8	4'- 0"	2	2'- 0"	4	11"	6'- 0"	3'- 3¼"	12'- 0"	6	11"	6'- 0"	--	---	-----	-----	4	12"	5'- 2"	28	12
5	5	9¼"	9¼"	8"	4	4'- 0"	8	4'- 0"	3	3'- 0"	4	10"	6'- 0"	3'- 9¼"	13'- 0"	6	10"	6'- 0"	--	---	-----	-----	4	12"	6'- 2"	28	16
5	6	9"	9"	8"	4	4'- 0"	8	4'- 0"	4	4'- 0"	4	10"	6'- 0"	4'- 3"	14'- 0"	6	10"	6'- 0"	--	---	-----	-----	4	12"	7'- 2"	28	20
5	7	9"	9"	8"	4	4'- 0"	8	4'- 0"	5	5'- 0"	4	9"	6'- 0"	4'- 9"	15'- 0"	6	9"	6'- 0"	--	---	-----	-----	4	12"	8'- 2"	28	24
6	4	9¼"	9¼"	8"	5	5'- 0"	10	5'- 0"	2	2'- 0"	4	9"	7'- 0"	3'- 3¼"	13'- 0"	6	9"	7'- 0"	--	---	-----	-----	4	12"	5'- 2"	33	12
6	5	9¼"	9¼"	8"	5	5'- 0"	10	5'- 0"	3	3'- 0"	4	9"	7'- 0"	3'- 9¼"	14'- 0"	6	9"	7'- 0"	--	---	-----	-----	4	12"	6'- 2"	33	16
6	6	9¼"	9¼"	8"	5	5'- 0"	10	5'- 0"	4	4'- 0"	4	9"	7'- 0"	4'- 3¼"	15'- 0"	6	9"	7'- 0"	--	---	-----	-----	4	12"	7'- 2"	33	20
6	7	9¼"	9¼"	8"	5	5'- 0"	10	5'- 0"	5	5'- 0"	4	8"	7'- 0"	4'- 9¼"	16'- 0"	6	8"	7'- 0"	--	---	-----	-----	4	12"	8'- 2"	33	24
6	8	9¼"	9¼"	8"	5	5'- 0"	10	5'- 0"	6	6'- 0"	4	12"	7'- 0"	5'- 3¼"	17'- 0"	8	12"	7'- 0"	4	12"	3'- 3"	6'- 4"	4	12"	9'- 2"	33	28
7	4	9½"	9½"	8"	6	6'- 0"	12	6'- 0"	2	2'- 0"	4	9"	8'- 0"	3'- 3½"	14'- 1"	6	9"	8'- 0"	--	---	-----	-----	4	12"	5'- 3"	38	12
7	6	9½"	9½"	8"	6	6'- 0"	12	6'- 0"	4	4'- 0"	4	8"	8'- 0"	4'- 3½"	16'- 1"	6	8"	8'- 0"	--	---	-----	-----	4	12"	7'- 3"	38	20
7	8	9½"	9½"	8"	6	6'- 0"	12	6'- 0"	6	6'- 0"	4	7"	8'- 0"	5'- 3½"	18'- 1"	6	7"	8'- 0"	--	---	-----	-----	4	12"	9'- 3"	38	28
7	10	9½"	9½"	8"	6	6'- 0"	12	6'- 0"	8	8'- 0"	4	6"	8'- 0"	6'- 3½"	20'- 1"	6	6"	8'- 0"	--	---	-----	-----	4	12"	11'- 3"	38	36
8	4	9¾"	9¾"	8"	7	7'- 0"	14	7'- 0"	2	2'- 0"	4	8"	9'- 0"	3'- 3¾"	15'- 1"	6	8"	9'- 0"	--	---	-----	-----	4	12"	5'- 3"	43	12
8	6	9¾"	9¾"	8"	7	7'- 0"	14	7'- 0"	4	4'- 0"	5	12"	9'- 0"	4'- 3¾"	17'- 0"	8	12"	9'- 0"	3	12"	3'- 6"	6'-10"	4	12"	7'- 3"	43	20
8	8	9¾"	9¾"	8"	7	7'- 0"	14	7'- 0"	6	6'- 0"	5	7"	9'- 0"	5'- 3¾"	19'- 0"	6	7"	9'- 0"	--	---	-----	-----	5	12"	9'- 3"	43	28
8	10	9½"	9½"	8"	7	7'- 0"	14	7'- 0"	8	8'- 0"	4	9"	9'- 0"	6'- 3½"	21'- 1"	8	9"	9'- 0"	4	9"	3'- 7"	6'-11"	4	12"	11'- 3"	43	36
9	4	9¾"	9¾"	8"	8	8'- 0"	16	8'- 0"	2	2'- 0"	6	12"	10'- 0"	3'- 7¼"	16'- 4"	8	12"	10'- 0"	5	12"	3'- 11"	7'- 5"	4	12"	5'- 3"	48	12
9	6	9¾"	9¾"	8"	8	8'- 0"	16	8'- 0"	4	4'- 0"	5	7"	10'- 0"	4'- 3¾"	18'- 0"	6	7"	10'- 0"	--	---	-----	-----	4	12"	7'- 3"	48	20
9	8	9¾"	9¾"	8"	8	8'- 0"	16	8'- 0"	6	6'- 0"	4	6"	10'- 0"	5'- 3¾"	20'- 1"	6	6"	10'- 0"	--	---	-----	-----	4	12"	9'- 3"	48	28
9	10	9¾"	9¾"	8"	8	8'- 0"	16	8'- 0"	8	8'- 0"	5	10½"	10'- 0"	6'- 3¾"	22'- 0"	8	10½"	10'- 0"	3	10½"	3'- 8"	7'- 3"	4	12"	11'- 3"	48	36
9	12	9¾"	9¾"	8"	8	8'- 0"	16	8'- 0"	10	10'- 0"	5	8"	10'- 0"	7'- 3¾"	24'- 0"	8	8"	10'- 0"	4	8"	4'- 1"	7'-11"	5	11½"	13'- 3"	48	44
10	4	10"	10"	8"	9	9'- 0"	18	9'- 0"	2	2'- 0"	4	7"	11'- 0"	3'- 6"	17'- 6"	6	7"	11'- 0"	4	7"	3'-10"	7'- 5"	4	12"	5'- 4"	53	12
10	6	10"	10"	8"	9	9'- 0"	18	9'- 0"	4	4'- 0"	5	10"	11'- 0"	4'- 9"	19'-10"	7	10"	11'- 0"	--	---	-----	-----	4	12"	7'- 4"	53	20
10	8	10"	10"	8"	9	9'- 0"	18	9'- 0"	6	6'- 0"	5	10"	11'- 0"	5'- 9"	21'-10"	8	10"	11'- 0"	3	10"	3'-10"	7'- 5"	4	12"	9'- 4"	53	28
10	10	10"	10"	8"	9	9'- 0"	18	9'- 0"	8	8'- 0"	4	8"	11'- 0"	6'- 6"	23'- 6"	7	8"	11'- 0"	4	8"	3'-10"	7'- 5"	4	12"	11'- 4"	53	36
10	12	10"	10"	8"	9	9'- 0"	18	9'- 0"	10	10'- 0"	4	7"	11'- 0"	7'- 6"	25'- 6"	8	7"	11'- 0"	4	7"	4'- 1"	7'-11"	5	12"	13'- 4"	53	44
12	6	10¼"	10¼"	8"	11	11'- 0"	22	11'- 0"	4	4'- 0"	6	9"	13'- 0"	5'- 0"	22'- 3"	8	9"	13'- 0"	4	9"	4'- 3"	8'- 5"	4	12"	7'- 5"	63	20
12	8	10"	10"	8"	11	11'- 0"	22	11'- 0"	6	6'- 0"	5	8"	13'- 0"	5'- 9"	23'-10"	8	8"	13'- 0"	3	8"	4'- 3"	8'- 5"	4	12"	9'- 4"	63	28
12	10	10"	10"	8"	11	11'- 0"	22	11'- 0"	8	8'- 0"	5	7"	13'- 0"	6'- 9"	25'-10"	7	7"	13'- 0"	--	---	-----	-----	4	12"	11'- 4"	63	36
12	12	10¼"	10¼"	8"	11	11'- 0"	22	11'- 0"	10	10'- 0"	5	8"	13'- 0"	7'- 9"	27'-11"	8	8"	13'- 0"	4	8"	4'- 3"	8'- 5"	5	12"	13'- 5"	63	44

A COPY OF THE ORIGINAL SEALED AND SIGNED DRAWING IS ON FILE IN THE CENTRAL OFFICE.

VDOT
ROAD AND BRIDGE STANDARDS

SHEET 1 OF 2 | REVISION DATE
1002.03 | 07/11

SINGLE BOX CULVERTS

0 TO 2 FT. FILLS

VIRGINIA DEPARTMENT OF TRANSPORTATION

SPECIFICATION REFERENCE

FOR TYPICAL SECTION, NOTES AND OTHER DETAILS, REFER TO STANDARD BCS-DT.

SPAN (FT.)	HGHT (FT.)	REINFORCING STEEL (LBS/LONG. JT)	QUAN./LF CONCRETE CLASS A4 (CY/LF)	QUAN./LF REINFORCING STEEL (LBS/LF)	HEADWALLS G HEADWALL LENGTH	HEADWALLS HW1 SIZE	HEADWALLS HW1 LENGTH	INLET CONCRETE CL. A4 (CY)	INLET REINFORCING STEEL (LBS)	OUTLET CONCRETE CL. A4 (CY)	OUTLET REINFORCING STEEL (LBS)	WINGWALL
3	3	17.854	0.413	54.850	5'-10"	6	5'- 6"	1.041	33.044	1.045	33.044	A
3	4	19.266	0.463	48.592	5'-10"	6	5'- 6"	1.134	33.044	1.137	33.044	C
4	3	22.029	0.482	53.114	6'-10"	6	6'- 6"	1.142	39.052	1.149	39.052	A
4	4	23.441	0.531	56.495	6'-10"	6	6'- 6"	1.235	39.052	1.242	39.052	C
4	5	24.853	0.580	60.671	6'-10"	6	6'- 6"	1.328	39.052	1.335	39.052	E
4	6	26.265	0.629	67.791	6'-10"	6	6'- 6"	1.420	39.052	1.427	39.052	G
5	3	26.204	0.547	62.973	7'-10"	6	7'- 6"	1.259	45.060	1.269	45.060	B
5	4	27.616	0.596	67.271	7'-10"	6	7'- 6"	1.351	45.060	1.362	45.060	D
5	5	29.028	0.645	75.429	7'-10"	6	7'- 6"	1.444	45.060	1.455	45.060	F
5	6	30.440	0.684	79.872	7'-10"	6	7'- 6"	1.518	45.060	1.529	45.060	G
5	7	31.852	0.732	89.391	7'-10"	6	7'- 6"	1.611	45.060	1.621	45.060	I
6	4	31.791	0.652	84.653	8'-10"	6	8'- 6"	1.449	51.068	1.463	51.068	D
6	5	33.203	0.701	89.275	8'-10"	6	8'- 6"	1.542	51.068	1.555	51.068	F
6	6	34.615	0.750	93.896	8'-10"	6	8'- 6"	1.634	51.068	1.648	51.068	H
6	7	36.027	0.798	105.585	8'-10"	6	8'- 6"	1.727	51.068	1.741	51.068	J
6	8	37.439	0.846	124.695	8'-10"	6	8'- 6"	1.820	51.068	1.833	51.068	L
7	4	35.966	0.721	94.040	9'-10"	6	9'- 6"	1.545	57.076	1.562	57.076	D
7	6	38.790	0.818	110.869	9'-10"	6	9'- 6"	1.730	57.076	1.747	57.076	H
7	8	41.614	0.916	130.884	9'-10"	6	9'- 6"	1.915	57.076	1.933	57.076	L
7	10	44.438	1.012	155.677	9'-10"	6	9'- 6"	2.101	57.076	2.118	57.076	P
8	4	40.141	0.793	111.031	10'-10"	6	10'- 6"	1.639	63.084	1.659	63.084	D
8	6	42.965	0.889	142.409	10'-10"	6	10'- 6"	1.824	63.084	1.845	63.084	H
8	8	45.789	0.985	175.199	10'-10"	6	10'- 6"	2.010	63.084	2.030	63.084	L
8	10	48.613	1.069	188.158	10'-10"	6	10'- 6"	2.197	63.084	2.218	63.084	P
9	4	44.316	0.848	179.518	11'-10"	6	11'- 6"	1.735	69.092	1.758	69.092	D
9	6	47.140	0.948	159.791	11'-10"	6	11'- 6"	1.920	69.092	1.944	69.092	H
9	8	49.964	1.046	168.693	11'-10"	6	11'- 6"	2.105	69.092	2.129	69.092	L
9	10	52.788	1.143	189.675	11'-10"	6	11'- 6"	2.291	69.092	2.315	69.092	P
9	12	55.612	1.236	269.973	11'-10"	6	11'- 6"	2.476	69.092	2.500	69.092	T
10	4	48.491	0.925	180.133	12'-10"	6	12'- 6"	1.826	75.100	1.853	75.100	D
10	6	51.315	1.026	158.894	12'-10"	6	12'- 6"	2.012	75.100	2.039	75.100	H
10	8	54.139	1.121	200.152	12'-10"	6	12'- 6"	2.197	75.100	2.224	75.100	L
10	10	56.963	1.219	212.453	12'-10"	6	12'- 6"	2.383	75.100	2.410	75.100	P
10	12	59.787	1.313	279.378	12'-10"	6	12'- 6"	2.568	75.100	2.595	75.100	T
12	6	59.665	1.161	275.345	14'-10"	6	14'- 6"	2.197	87.116	2.230	87.116	H
12	8	62.489	1.239	268.938	14'-10"	6	14'- 6"	2.387	87.116	2.421	87.116	L
12	10	65.313	1.339	258.134	14'-10"	6	14'- 6"	2.573	87.116	2.606	87.116	P
12	12	68.137	1.454	318.809	14'-10"	6	14'- 6"	2.753	87.116	2.786	87.116	T

A COPY OF THE ORIGINAL SEALED AND SIGNED DRAWING IS ON FILE IN THE CENTRAL OFFICE.

SPECIFICATION REFERENCE

SINGLE BOX CULVERTS

0 TO 2 FT. FILLS

VIRGINIA DEPARTMENT OF TRANSPORTATION

VDOT

ROAD AND BRIDGE STANDARDS

REVISION DATE 07/11

SHEET 2 OF 2

1002.04

BCS-05

FOR TYPICAL SECTION, NOTES AND OTHER DETAILS, REFER TO STANDARD BCS-DT.

DIMENSIONS					REINFORCING STEEL																						
SPAN	HGHT	T1	T2	T3							BH1					BH2			BH3				BV1				
(FT.)	(FT.)	TOP SLAB (IN.)	BOTTOM SLAB (IN.)	WALL (IN.)	A	B	C	D	E	F	SIZE	SPACING C-C	a	b	LENGTH	SIZE	SPACING C-C	LENGTH	SIZE	SPACING C-C	a	LENGTH	SIZE	SPACING C-C	LENGTH	NO. BL1 #4 BARS	NO. BL2 #3 BARS
3	3	8"	8"	8"	2	2'- 0"	2	2'- 0"	1	1'- 0"	4	12"	4'- 0"	2'- 8"	8'-10"	4	12"	4'- 0"	--	---	-----	-----	4	12"	4'- 0"	16	8
3	4	8"	8"	8"	2	2'- 0"	2	2'- 0"	2	2'- 0"	4	12"	4'- 0"	3'- 2"	9'-10"	4	12"	4'- 0"	--	---	-----	-----	4	12"	5'- 0"	16	12
4	3	8"	8"	8"	3	3'- 0"	3	3'- 0"	1	1'- 0"	4	12"	5'- 0"	2'- 8"	9'-10"	5	12"	5'- 0"	--	---	-----	-----	4	12"	4'- 0"	20	8
4	4	8"	8"	8"	3	3'- 0"	3	3'- 0"	2	2'- 0"	4	12"	5'- 0"	3'- 2"	10'-10"	5	12"	5'- 0"	--	---	-----	-----	4	12"	5'- 0"	20	12
4	5	8"	8"	8"	3	3'- 0"	3	3'- 0"	3	3'- 0"	4	12"	5'- 0"	3'- 8"	11'-10"	5	12"	5'- 0"	--	---	-----	-----	4	12"	6'- 0"	20	16
4	6	8"	8"	8"	3	3'- 0"	3	3'- 0"	4	4'- 0"	4	12"	5'- 0"	4'- 2"	12'-10"	5	12"	5'- 0"	--	---	-----	-----	4	12"	7'- 0"	20	20
5	3	8"	8"	8"	4	4'- 0"	4	4'- 0"	1	1'- 0"	4	12"	6'- 0"	2'- 8"	10'-10"	5	12"	6'- 0"	4	12"	2'- 6"	4'- 9"	4	12"	4'- 0"	24	8
5	4	8"	8"	8"	4	4'- 0"	4	4'- 0"	2	2'- 0"	4	12"	6'- 0"	3'- 2"	11'-10"	5	12"	6'- 0"	--	---	-----	-----	4	12"	5'- 0"	24	12
5	5	8"	8"	8"	4	4'- 0"	4	4'- 0"	3	3'- 0"	4	12"	6'- 0"	3'- 8"	12'-10"	5	12"	6'- 0"	--	---	-----	-----	4	12"	6'- 0"	24	16
5	6	8"	8"	8"	4	4'- 0"	4	4'- 0"	4	4'- 0"	4	12"	6'- 0"	4'- 2"	13'-10"	6	12"	6'- 0"	--	---	-----	-----	4	12"	7'- 0"	24	20
5	7	8"	8"	8"	4	4'- 0"	4	4'- 0"	5	5'- 0"	4	12"	6'- 0"	4'- 8"	14'-10"	6	12"	6'- 0"	--	---	-----	-----	4	12"	8'- 0"	24	24
6	4	8"	8"	8"	5	5'- 0"	5	5'- 0"	2	2'- 0"	5	12"	7'- 0"	3'- 2"	12'- 8"	6	12"	7'- 0"	--	---	-----	-----	4	12"	5'- 0"	28	12
6	5	8"	8"	8"	5	5'- 0"	5	5'- 0"	3	3'- 0"	4	12"	7'- 0"	3'- 8"	13'-10"	6	12"	7'- 0"	4	12"	2'- 8 3/8"	5'- 2"	4	12"	6'- 0"	28	16
6	6	8"	8"	8"	5	5'- 0"	5	5'- 0"	4	4'- 0"	4	12"	7'- 0"	4'- 2"	14'-10"	6	12"	7'- 0"	4	12"	2'- 8 3/8"	5'- 2"	4	12"	7'- 0"	28	20
6	7	8"	8"	8"	5	5'- 0"	5	5'- 0"	5	5'- 0"	4	10"	7'- 0"	4'- 8"	15'-10"	6	10"	7'- 0"	4	10"	2'-11"	5'- 8"	4	12"	8'- 0"	28	24
6	8	8"	8"	8"	5	5'- 0"	5	5'- 0"	6	6'- 0"	4	9"	7'- 0"	5'- 2"	16'-10"	6	9"	7'- 0"	4	9"	3'- 2"	6'- 2"	4	12"	9'- 0"	28	28
7	4	8"	8"	8"	6	6'- 0"	6	6'- 0"	2	2'- 0"	5	11"	8'- 0"	3'- 2"	13'- 8"	6	11"	8'- 0"	--	---	-----	-----	4	12"	5'- 0"	32	12
7	6	8"	8"	8"	6	6'- 0"	6	6'- 0"	4	4'- 0"	4	9"	8'- 0"	4'- 2"	15'-10"	6	9"	8'- 0"	4	9"	2'-10 3/4"	5'- 6"	4	12"	7'- 0"	32	20
7	8	8"	8"	8"	6	6'- 0"	6	6'- 0"	6	6'- 0"	4	8"	8'- 0"	5'- 2"	17'-10"	6	8"	8'- 0"	3	8"	3'- 2"	6'- 2"	4	12"	9'- 0"	32	28
7	10	8"	8"	8"	6	6'- 0"	6	6'- 0"	8	8'- 0"	5	6"	8'- 0"	6'- 2"	19'- 8"	6	6"	8'- 0"	--	---	-----	-----	5	12"	11'- 0"	32	36
8	4	8"	8"	8"	7	7'- 0"	7	7'- 0"	2	2'- 0"	5	9"	9'- 0"	3'- 2"	14'- 8"	6	9"	9'- 0"	3	9"	3'- 2"	6'- 2"	4	11 1/2"	5'- 0"	36	12
8	6	8"	8"	8"	7	7'- 0"	7	7'- 0"	4	4'- 0"	4	8"	9'- 0"	4'- 2"	16'-10"	6	8"	9'- 0"	4	8"	3'- 2"	6'- 2"	4	12"	7'- 0"	36	20
8	8	8"	8"	8"	7	7'- 0"	7	7'- 0"	6	6'- 0"	5	7"	9'- 0"	5'- 2"	18'- 8"	6	7"	9'- 0"	--	---	-----	-----	4	12"	9'- 0"	36	28
8	10	8"	8"	8"	7	7'- 0"	7	7'- 0"	8	8'- 0"	5	11"	9'- 0"	6'- 2"	20'- 8"	8	11"	9'- 0"	4	11"	3'- 6"	6'- 9"	5	12"	11'- 0"	36	36
9	4	8"	8"	8"	8	8'- 0"	8	8'- 0"	2	2'- 0"	5	8"	10'- 0"	3'- 2"	15'- 8"	6	8"	10'- 0"	3	8"	3'- 3 5/8"	6'- 5"	4	8"	5'- 0"	40	12
9	6	8"	8"	8"	8	8'- 0"	8	8'- 0"	4	4'- 0"	4	7"	10'- 0"	4'- 2"	17'-10"	6	7"	10'- 0"	4	7"	3'- 3 5/8"	6'- 4"	4	11"	7'- 0"	40	20
9	8	8 1/4"	8 1/4"	8"	8	8'- 0"	8	8'- 0"	6	6'- 0"	5	10 1/2"	10'- 0"	5'- 2 1/4"	19'- 9"	8	10 1/2"	10'- 0"	3	10 1/2"	3'- 3 5/8"	6'- 5"	4	12"	9'- 0"	40	28
9	10	8"	8"	8"	8	8'- 0"	8	8'- 0"	8	8'- 0"	5	10"	10'- 0"	6'- 2"	21'- 8"	8	10"	10'- 0"	4	10"	3'- 6"	6'- 9"	5	12"	11'- 0"	40	36
9	12	8 1/4"	8 1/4"	8"	8	8'- 0"	8	8'- 0"	10	10'- 0"	5	9 1/2"	10'- 0"	7'- 2 1/4"	23'- 9"	8	9 1/2"	10'- 0"	3	9 1/2"	3'-11"	7'- 9"	6	11 1/2"	13'- 0"	40	44
10	4	8 3/4"	8 3/4"	8"	9	9'- 0"	9	9'- 0"	2	2'- 0"	6	7"	11'- 0"	3'- 2 3/4"	16'- 8"	6	7"	11'- 0"	--	---	-----	-----	5	9 1/2"	5'- 2"	44	12
10	6	8 3/4"	8 3/4"	8"	9	9'- 0"	9	9'- 0"	4	4'- 0"	6	10"	11'- 0"	4'- 2 3/4"	18'- 8"	8	10"	11'- 0"	--	---	-----	-----	4	9"	7'- 2"	44	20
10	8	8 3/4"	8 3/4"	8"	9	9'- 0"	9	9'- 0"	6	6'- 0"	6	6"	11'- 0"	5'- 2 3/4"	20'- 8"	6	6"	11'- 0"	--	---	-----	-----	4	10"	9'- 2"	44	28
10	10	8 3/4"	8 3/4"	8"	9	9'- 0"	9	9'- 0"	8	8'- 0"	6	9 1/2"	11'- 0"	6'- 2 3/4"	22'- 8"	8	9 1/2"	11'- 0"	3	9 1/2"	3'- 6"	6'-10"	4	9"	11'- 2"	44	36
10	12	9 1/4"	9 1/4"	8"	9	9'- 0"	9	9'- 0"	10	10'- 0"	5	8 1/2"	11'- 0"	7'- 3 1/4"	24'-11"	8	8 1/2"	11'- 0"	4	8 1/2"	4'- 1"	7'-11"	6	12"	13'- 2"	44	44
12	6	9 1/2"	9 1/2"	8"	11	11'- 0"	11	11'- 0"	4	4'- 0"	6	8"	13'- 0"	4'- 3 1/2"	20'- 9"	7	8"	13'- 0"	4	8"	3'-10 3/4"	7'- 6"	4	6 1/2"	7'- 3"	52	20
12	8	9 3/4"	9 3/4"	8"	11	11'- 0"	11	11'- 0"	6	6'- 0"	6	8"	13'- 0"	5'- 7 1/4"	23'- 4"	8	8"	13'- 0"	3	8"	3'-10 3/4"	7'- 7"	4	8 1/2"	9'- 3"	52	28
12	10	9 3/4"	9 3/4"	8"	11	11'- 0"	11	11'- 0"	8	8'- 0"	5	8"	13'- 0"	6'- 3 3/4"	25'- 0"	8	8"	13'- 0"	4	8"	3'-10 3/4"	7'- 6"	4	12"	11'- 3"	52	36
12	12	10 1/2"	10 1/2"	8"	11	11'- 0"	11	11'- 0"	10	10'- 0"	6	7"	13'- 0"	7'- 8"	27'- 7"	8	7"	13'- 0"	--	---	-----	-----	6	12"	13'- 5"	52	44

A COPY OF THE ORIGINAL SEALED AND SIGNED DRAWING IS ON FILE IN THE CENTRAL OFFICE.

VDOT
ROAD AND BRIDGE STANDARDS

SHEET 1 OF 2 | REVISION DATE
1002.05 | 07/11

SINGLE BOX CULVERTS

2 TO 5 FT. FILLS

VIRGINIA DEPARTMENT OF TRANSPORTATION

SPECIFICATION REFERENCE

FOR TYPICAL SECTION, NOTES AND OTHER DETAILS, REFER TO STANDARD BCS-DT.

SPAN (FT.)	HGHT (FT.)	REINFORCING STEEL (LBS/LONG. JT)	QUAN./LF CONCRETE CLASS A4 (CY/LF)	QUAN./LF REINFORCING STEEL (LBS/LF)	HEADWALLS G HEADWALL LENGTH	HEADWALLS HW1 SIZE	HEADWALLS HW1 LENGTH	INLET CONCRETE CL. A4 (CY)	INLET REINFORCING STEEL (LBS)	OUTLET CONCRETE CL. A4 (CY)	OUTLET REINFORCING STEEL (LBS)	WINGWALL
3	3	16.184	0.401	36.185	5'-10"	6	5'- 6"	1.038	33.044	1.042	33.044	A
3	4	17.596	0.450	40.361	5'-10"	6	5'- 6"	1.131	33.044	1.134	33.044	C
4	3	19.524	0.450	45.279	6'-10"	6	6'- 6"	1.139	39.052	1.146	39.052	A
4	4	20.936	0.499	49.455	6'-10"	6	6'- 6"	1.232	39.052	1.239	39.052	C
4	5	22.348	0.548	53.631	6'-10"	6	6'- 6"	1.324	39.052	1.332	39.052	E
4	6	23.760	0.597	57.807	6'-10"	6	6'- 6"	1.417	39.052	1.424	39.052	G
5	3	22.864	0.498	64.065	7'-10"	6	7'- 6"	1.240	45.060	1.251	45.060	A
5	4	24.276	0.548	55.549	7'-10"	6	7'- 6"	1.333	45.060	1.343	45.060	C
5	5	25.688	0.597	59.725	7'-10"	6	7'- 6"	1.426	45.060	1.436	45.060	E
5	6	27.100	0.645	69.409	7'-10"	6	7'- 6"	1.518	45.060	1.529	45.060	G
5	7	28.512	0.695	73.585	7'-10"	6	7'- 6"	1.611	45.060	1.621	45.060	I
6	4	27.616	0.595	77.347	8'-10"	6	8'- 6"	1.434	51.068	1.448	51.068	C
6	5	29.028	0.644	86.051	8'-10"	6	8'- 6"	1.527	51.068	1.541	51.068	E
6	6	30.440	0.693	90.227	8'-10"	6	8'- 6"	1.620	51.068	1.633	51.068	G
6	7	31.852	0.741	109.627	8'-10"	6	8'- 6"	1.712	51.068	1.726	51.068	I
6	8	33.264	0.789	124.645	8'-10"	6	8'- 6"	1.805	51.068	1.819	51.068	K
7	4	30.956	0.644	89.885	9'-10"	6	9'- 6"	1.535	57.076	1.552	57.076	C
7	6	33.780	0.741	118.090	9'-10"	6	9'- 6"	1.721	57.076	1.738	57.076	G
7	8	36.604	0.838	132.362	9'-10"	6	9'- 6"	1.906	57.076	1.923	57.076	K
7	10	39.428	0.933	190.758	9'-10"	6	9'- 6"	2.092	57.076	2.109	57.076	O
8	4	34.296	0.691	126.785	10'-10"	6	10'- 6"	1.636	63.084	1.657	63.084	C
8	6	37.120	0.788	142.648	10'-10"	6	10'- 6"	1.822	63.084	1.842	63.084	G
8	8	39.944	0.886	159.699	10'-10"	6	10'- 6"	2.007	63.084	2.028	63.084	K
8	10	42.768	0.983	183.378	10'-10"	6	10'- 6"	2.193	63.084	2.213	63.084	O
9	4	37.636	0.738	149.809	11'-10"	6	11'- 6"	1.738	69.092	1.761	69.092	C
9	6	40.460	0.836	165.793	11'-10"	6	11'- 6"	1.923	69.092	1.947	69.092	G
9	8	43.284	0.950	168.414	11'-10"	6	11'- 6"	2.105	69.092	2.129	69.092	K
9	10	46.108	1.030	206.737	11'-10"	6	11'- 6"	2.294	69.092	2.318	69.092	O
9	12	48.932	1.143	231.984	11'-10"	6	11'- 6"	2.476	69.092	2.500	69.092	S
10	4	40.976	0.837	189.993	12'-10"	6	12'- 6"	1.827	75.100	1.854	75.100	C
10	6	43.800	0.936	187.456	12'-10"	6	12'- 6"	2.013	75.100	2.040	75.100	G
10	8	46.624	1.030	244.869	12'-10"	6	12'- 6"	2.198	75.100	2.225	75.100	K
10	10	49.448	1.130	239.860	12'-10"	6	12'- 6"	2.383	75.100	2.411	75.100	O
10	12	52.272	1.261	276.287	12'-10"	6	12'- 6"	2.580	75.100	2.607	75.100	T
12	6	50.480	1.100	263.413	14'-10"	6	14'- 6"	2.213	87.116	2.246	87.116	H
12	8	53.304	1.218	286.836	14'-10"	6	14'- 6"	2.393	87.116	2.426	87.116	L
12	10	56.128	1.317	275.717	14'-10"	6	14'- 6"	2.578	87.116	2.612	87.116	P
12	12	58.952	1.472	350.844	14'-10"	6	14'- 6"	2.747	87.116	2.781	87.116	T

A COPY OF THE ORIGINAL SEALED AND SIGNED DRAWING IS ON FILE IN THE CENTRAL OFFICE.

SPECIFICATION REFERENCE

SINGLE BOX CULVERTS

2 TO 5 FT. FILLS

VIRGINIA DEPARTMENT OF TRANSPORTATION

VDOT

ROAD AND BRIDGE STANDARDS

REVISION DATE 07/11

SHEET 2 OF 2

1002.06

BCS-10

FOR TYPICAL SECTION, NOTES AND OTHER DETAILS, REFER TO STANDARD BCS-DT.

DIMENSIONS					REINFORCING STEEL																						
SPAN	HGHT	T1	T2	T3							BH1					BH2			BH3				BV1				
(FT.)	(FT.)	TOP SLAB (IN.)	BOTTOM SLAB (IN.)	WALL (IN.)	A	B	C	D	E	F	SIZE	SPACING C-C	a	b	LENGTH	SIZE	SPACING C-C	LENGTH	SIZE	SPACING C-C	a	LENGTH	SIZE	SPACING C-C	LENGTH	NO. BL1 #4 BARS	NO. BL2 #3 BARS
3	3	8"	8"	8"	2	2'- 0"	2	2'- 0"	1	1'- 0"	4	12"	4'- 0"	2'- 8"	8'-10"	4	12"	4'- 0"	--	---	-----	-----	4	12"	4'- 0"	16	8
3	4	8"	8"	8"	2	2'- 0"	2	2'- 0"	2	2'- 0"	4	12"	4'- 0"	3'- 2"	9'-10"	4	12"	4'- 0"	--	---	-----	-----	4	12"	5'- 0"	16	12
4	3	8"	8"	8"	3	3'- 0"	3	3'- 0"	1	1'- 0"	4	11½"	5'- 0"	2'- 8"	9'-10"	4	11½"	5'- 0"	--	---	-----	-----	4	12"	4'- 0"	20	8
4	4	8"	8"	8"	3	3'- 0"	3	3'- 0"	2	2'- 0"	4	11"	5'- 0"	3'- 2"	10'-10"	4	11"	5'- 0"	--	---	-----	-----	4	12"	5'- 0"	20	12
4	5	8"	8"	8"	3	3'- 0"	3	3'- 0"	3	3'- 0"	4	12"	5'- 0"	3'- 8"	11'-10"	5	12"	5'- 0"	3	12"	2'- 3⅝"	4'- 5"	4	12"	6'- 0"	20	16
4	6	8"	8"	8"	3	3'- 0"	3	3'- 0"	4	4'- 0"	4	12"	5'- 0"	4'- 2"	12'-10"	5	12"	5'- 0"	3	12"	2'- 9"	5'- 5"	4	12"	7'- 0"	20	20
5	3	8"	8"	8"	4	4'- 0"	4	4'- 0"	1	1'- 0"	4	12"	6'- 0"	2'- 8"	10'-10"	5	12"	6'- 0"	--	---	-----	-----	4	12"	4'- 0"	24	8
5	4	8"	8"	8"	4	4'- 0"	4	4'- 0"	2	2'- 0"	4	11½"	6'- 0"	3'- 2"	11'-10"	5	11½"	6'- 0"	--	---	-----	-----	4	12"	5'- 0"	24	12
5	5	8"	8"	8"	4	4'- 0"	4	4'- 0"	3	3'- 0"	4	11"	6'- 0"	3'- 8"	12'-10"	5	11"	6'- 0"	--	---	-----	-----	4	12"	6'- 0"	24	16
5	6	8"	8"	8"	4	4'- 0"	4	4'- 0"	4	4'- 0"	4	10½"	6'- 0"	4'- 2"	13'-10"	5	10½"	6'- 0"	--	---	-----	-----	4	12"	7'- 0"	24	20
5	7	8"	8"	8"	4	4'- 0"	4	4'- 0"	5	5'- 0"	4	10"	6'- 0"	4'- 8"	14'-10"	5	10"	6'- 0"	--	---	-----	-----	4	12"	8'- 0"	24	24
6	4	8"	8"	8"	5	5'- 0"	5	5'- 0"	2	2'- 0"	4	9½"	7'- 0"	3'- 2"	12'-10"	5	9½"	7'- 0"	--	---	-----	-----	4	12"	5'- 0"	28	12
6	5	8"	8"	8"	5	5'- 0"	5	5'- 0"	3	3'- 0"	4	11½"	7'- 0"	3'- 8"	13'-10"	6	11½"	7'- 0"	4	11½"	2'- 8⅜"	5'- 2"	4	12"	6'- 0"	28	16
6	6	8"	8"	8"	5	5'- 0"	5	5'- 0"	4	4'- 0"	4	11"	7'- 0"	4'- 2"	14'-10"	6	11"	7'- 0"	3	11"	2'- 8⅜"	5'- 2"	4	12"	7'- 0"	28	20
6	7	8"	8"	8"	5	5'- 0"	5	5'- 0"	5	5'- 0"	4	10½"	7'- 0"	4'- 8"	15'-10"	6	10½"	7'- 0"	3	10½"	2'-11"	5'- 8"	4	12"	8'- 0"	28	24
6	8	8"	8"	8"	5	5'- 0"	5	5'- 0"	6	6'- 0"	4	10"	7'- 0"	5'- 2"	16'-10"	6	10"	7'- 0"	4	10"	3'- 2"	6'- 2"	5	12"	9'- 0"	28	28
7	4	8"	8"	8"	6	6'- 0"	6	6'- 0"	2	2'- 0"	5	10"	8'- 0"	3'- 2"	13'- 8"	6	10"	8'- 0"	3	10"	2'-10¾"	5'- 7"	4	9"	5'- 0"	32	12
7	6	8"	8"	8"	6	6'- 0"	6	6'- 0"	4	4'- 0"	4	9"	8'- 0"	4'- 2"	15'-10"	6	9"	8'- 0"	3	9"	2'-10¾"	5'- 7"	4	12"	7'- 0"	32	20
7	8	8"	8"	8"	6	6'- 0"	6	6'- 0"	6	6'- 0"	4	8½"	8'- 0"	5'- 2"	17'-10"	6	8½"	8'- 0"	3	8½"	3'- 2"	6'- 2"	4	12"	9'- 0"	32	28
7	10	8"	8"	8"	6	6'- 0"	6	6'- 0"	8	8'- 0"	4	7½"	8'- 0"	6'- 2"	19'-10"	6	7½"	8'- 0"	3	7½"	3'- 6"	6'- 9"	5	9"	11'- 0"	32	36
8	4	8"	8"	8"	7	7'- 0"	7	7'- 0"	2	2'- 0"	5	8½"	9'- 0"	3'- 2"	14'- 8"	6	8½"	9'- 0"	3	8½"	3'- 2"	6'- 2"	4	6"	5'- 0"	36	12
8	6	8"	8"	8"	7	7'- 0"	7	7'- 0"	4	4'- 0"	4	7½"	9'- 0"	4'- 2"	16'-10"	6	7½"	9'- 0"	3	7½"	3'- 2"	6'- 2"	4	9"	7'- 0"	36	20
8	8	8"	8"	8"	7	7'- 0"	7	7'- 0"	6	6'- 0"	4	7"	9'- 0"	5'- 2"	18'-10"	6	7"	9'- 0"	3	7"	3'- 2"	6'- 2"	4	12"	9'- 0"	36	28
8	10	8"	8"	8"	7	7'- 0"	7	7'- 0"	8	8'- 0"	4	6½"	9'- 0"	6'- 2"	20'-10"	6	6½"	9'- 0"	3	6½"	3'- 6"	6'- 9"	5	9"	11'- 0"	36	36
9	4	8"	8"	8"	8	8'- 0"	8	8'- 0"	2	2'- 0"	5	7½"	10'- 0"	3'- 2"	15'- 8"	6	7½"	10'- 0"	3	7½"	3'- 3⅝"	6'- 5"	4	5½"	5'- 0"	40	12
9	6	8¼"	8¼"	8"	8	8'- 0"	8	8'- 0"	4	4'- 0"	5	6½"	10'- 0"	4'- 2¼"	17'- 9"	6	6½"	10'- 0"	--	---	-----	-----	4	7½"	7'- 0"	40	20
9	8	8¼"	8¼"	8"	8	8'- 0"	8	8'- 0"	6	6'- 0"	4	6"	10'- 0"	5'- 2¼"	19'-10"	6	6"	10'- 0"	3	6"	3'- 3⅝"	6'- 5"	4	10½"	9'- 0"	40	28
9	10	8½"	8½"	8"	8	8'- 0"	8	8'- 0"	8	8'- 0"	5	7½"	10'- 0"	6'- 2½"	21'- 9"	7	7½"	10'- 0"	3	7½"	3'- 6"	6'- 9"	5	10"	11'- 1"	40	36
9	12	9"	9"	8"	8	8'- 0"	8	8'- 0"	10	10'- 0"	6	8½"	10'- 0"	7'- 3"	23'- 8"	8	8½"	10'- 0"	--	---	-----	-----	7	12"	13'- 2"	40	44
10	4	8¼"	8¼"	8"	9	9'- 0"	9	9'- 0"	2	2'- 0"	5	6½"	11'- 0"	3'- 2¼"	16'- 9"	6	6½"	11'- 0"	3	6½"	3'- 6"	6'-10"	5	6"	5'- 0"	44	12
10	6	8½"	8½"	8"	9	9'- 0"	9	9'- 0"	4	4'- 0"	6	7½"	11'- 0"	4'- 2½"	18'- 7"	7	7½"	11'- 0"	--	---	-----	-----	4	6"	7'- 1"	44	20
10	8	8¾"	8¾"	8"	9	9'- 0"	9	9'- 0"	6	6'- 0"	4	5½"	11'- 0"	5'- 2¾"	20'-11"	6	5½"	11'- 0"	3	5½"	3'- 6"	6'-10"	4	9"	9'- 2"	44	28
10	10	9¼"	9¼"	8"	9	9'- 0"	9	9'- 0"	8	8'- 0"	4	5"	11'- 0"	6'- 3¼"	23'- 0"	6	5"	11'- 0"	--	---	-----	-----	5	12"	11'- 2"	44	36
10	12	9¼"	9¼"	10"	9	9'- 0"	9	9'- 0"	10	10'- 0"	4	8"	11'- 4"	7'- 3¼"	25'- 4"	8	8"	11'- 0"	4	8"	4'- 1"	7'-11"	6	12"	13'- 2"	44	44
12	6	10¾"	10¾"	8"	11	11'- 0"	11	11'- 0"	4	4'- 0"	6	7½"	13'- 0"	4'- 4¾"	21'- 0"	8	7½"	13'- 0"	3	7½"	3'-10¾"	7'- 7"	4	5½"	7'- 5"	52	20
12	8	10¾"	10¾"	8"	11	11'- 0"	11	11'- 0"	6	6'- 0"	5	6"	13'- 0"	5'- 4¾"	23'- 2"	7	6"	13'- 0"	--	---	-----	-----	4	7½"	9'- 5"	52	28
12	10	11"	11"	8"	11	11'- 0"	11	11'- 0"	8	8'- 0"	5	7"	13'- 0"	6'- 5"	25'- 2"	8	7"	13'- 0"	3	7"	3'-10¾"	7'- 7"	4	10½"	11'- 6"	52	36
12	12	11¼"	11¼"	10"	11	11'- 0"	11	11'- 0"	10	10'- 0"	5	6½"	13'- 4"	7'- 5¼"	27'- 7"	8	6½"	13'- 0"	3	6½"	4'- 2"	8'- 1"	6	12"	13'- 6"	52	44

A COPY OF THE ORIGINAL SEALED AND SIGNED DRAWING IS ON FILE IN THE CENTRAL OFFICE.

VDOT
ROAD AND BRIDGE STANDARDS

SHEET 1 OF 2 | REVISION DATE
1002.07 | 07/11

SINGLE BOX CULVERTS

5 TO 10 FT. FILLS

VIRGINIA DEPARTMENT OF TRANSPORTATION

SPECIFICATION REFERENCE

FOR TYPICAL SECTION, NOTES AND OTHER DETAILS, REFER TO STANDARD BCS-DT.

SPAN (FT.)	HGHT (FT.)	REINFORCING STEEL (LBS/LONG. JT)	QUAN./LF CONCRETE CLASS A4 (CY/LF)	QUAN./LF REINFORCING STEEL (LBS/LF)	HEADWALLS G HEADWALL LENGTH	HEADWALLS HW I SIZE	HEADWALLS HW I LENGTH	INLET CONCRETE CL. A4 (CY)	INLET REINFORCING STEEL (LBS)	OUTLET CONCRETE CL. A4 (CY)	OUTLET REINFORCING STEEL (LBS)	WINGWALL
3	3	16.184	0.401	36.185	5'-10"	6	5'- 6"	1.038	33.044	1.042	33.044	A
3	4	17.596	0.450	40.361	5'-10"	6	5'- 6"	1.131	33.044	1.134	33.044	C
4	3	19.524	0.450	42.391	6'-10"	6	6'- 6"	1.139	39.052	1.146	39.052	A
4	4	20.936	0.499	47.628	6'-10"	6	6'- 6"	1.232	39.052	1.239	39.052	C
4	5	22.348	0.547	60.274	6'-10"	6	6'- 6"	1.324	39.052	1.332	39.052	E
4	6	23.760	0.596	67.580	6'-10"	6	6'- 6"	1.417	39.052	1.424	39.052	G
5	3	22.864	0.499	51.373	7'-10"	6	7'- 6"	1.240	45.060	1.251	45.060	A
5	4	24.276	0.548	56.781	7'-10"	6	7'- 6"	1.333	45.060	1.343	45.060	C
5	5	25.688	0.597	62.422	7'-10"	6	7'- 6"	1.426	45.060	1.436	45.060	E
5	6	27.100	0.646	68.330	7'-10"	6	7'- 6"	1.518	45.060	1.529	45.060	G
5	7	28.512	0.694	74.544	7'-10"	6	7'- 6"	1.611	45.060	1.621	45.060	I
6	4	27.616	0.596	69.998	8'-10"	6	8'- 6"	1.434	51.068	1.448	51.068	C
6	5	29.028	0.644	88.369	8'-10"	6	8'- 6"	1.527	51.068	1.541	51.068	E
6	6	30.440	0.693	88.612	8'-10"	6	8'- 6"	1.620	51.068	1.633	51.068	G
6	7	31.852	0.742	98.634	8'-10"	6	8'- 6"	1.712	51.068	1.726	51.068	I
6	8	33.264	0.790	122.571	8'-10"	6	8'- 6"	1.805	51.068	1.819	51.068	K
7	4	30.956	0.643	107.920	9'-10"	6	9'- 6"	1.535	57.076	1.552	57.076	C
7	6	33.780	0.741	109.692	9'-10"	6	9'- 6"	1.721	57.076	1.738	57.076	G
7	8	36.604	0.839	126.917	9'-10"	6	9'- 6"	1.906	57.076	1.923	57.076	K
7	10	39.428	0.935	165.192	9'-10"	6	9'- 6"	2.092	57.076	2.109	57.076	O
8	4	34.296	0.690	138.922	10'-10"	6	10'- 6"	1.636	63.084	1.657	63.084	C
8	6	37.120	0.788	140.651	10'-10"	6	10'- 6"	1.822	63.084	1.842	63.084	G
8	8	39.944	0.886	154.019	10'-10"	6	10'- 6"	2.007	63.084	2.028	63.084	K
8	10	42.768	0.982	190.266	10'-10"	6	10'- 6"	2.193	63.084	2.213	63.084	O
9	4	37.636	0.737	161.601	11'-10"	6	11'- 6"	1.738	69.092	1.761	69.092	C
9	6	40.460	0.851	173.018	11'-10"	6	11'- 6"	1.920	69.092	1.944	69.092	G
9	8	43.284	0.949	183.366	11'-10"	6	11'- 6"	2.105	69.092	2.129	69.092	K
9	10	46.108	1.061	226.058	11'-10"	6	11'- 6"	2.288	69.092	2.311	69.092	O
9	12	48.932	1.188	275.274	11'-10"	6	11'- 6"	2.467	69.092	2.491	69.092	S
10	4	40.976	0.801	199.247	12'-10"	6	12'- 6"	1.835	75.100	1.862	75.100	C
10	6	43.800	0.916	217.106	12'-10"	6	12'- 6"	2.016	75.100	2.043	75.100	G
10	8	46.624	1.033	211.738	12'-10"	6	12'- 6"	2.198	75.100	2.225	75.100	K
10	10	49.448	1.166	223.119	12'-10"	6	12'- 6"	2.394	75.100	2.421	75.100	P
10	12	52.272	1.429	253.959	12'-10"	6	12'- 6"	2.580	75.100	2.607	75.100	T
12	6	50.480	1.201	294.130	14'-10"	6	14'- 6"	2.186	87.116	2.219	87.116	H
12	8	53.304	1.301	268.332	14'-10"	6	14'- 6"	2.371	87.116	2.405	87.116	L
12	10	56.128	1.419	294.385	14'-10"	6	14'- 6"	2.551	87.116	2.585	87.116	P
12	12	58.952	1.705	351.150	14'-10"	6	14'- 6"	2.731	87.116	2.765	87.116	T

A COPY OF THE ORIGINAL SEALED AND SIGNED DRAWING IS ON FILE IN THE CENTRAL OFFICE.

SPECIFICATION REFERENCE

SINGLE BOX CULVERTS

5 TO 10 FT. FILLS

VIRGINIA DEPARTMENT OF TRANSPORTATION

VDOT

ROAD AND BRIDGE STANDARDS

REVISION DATE 07/11

SHEET 2 OF 2

1002.08

BCS-20

FOR TYPICAL SECTION, NOTES AND OTHER DETAILS, REFER TO STANDARD BCS-DT.

DIMENSIONS					REINFORCING STEEL																						
SPAN	HGHT	T1	T2	T3							BH1					BH2			BH3				BV1				
(FT.)	(FT.)	TOP SLAB (IN.)	BOTTOM SLAB (IN.)	WALL (IN.)	A	B	C	D	E	F	SIZE	SPACING C-C	a	b	LENGTH	SIZE	SPACING C-C	LENGTH	SIZE	SPACING C-C	a	LENGTH	SIZE	SPACING C-C	LENGTH	NO. BL1 #4 BARS	NO. BL2 #3 BARS
3	3	8"	8"	8"	2	2'-0"	2	2'-0"	1	1'-0"	4	12"	4'-0"	2'-8"	8'-10"	5	12"	4'-0"	3	12"	2'-2"	4'- 1"	4	12"	4'-0"	16	8
3	4	8"	8"	8"	2	2'-0"	2	2'-0"	2	2'-0"	4	12"	4'-0"	3'-2"	9'-10"	5	12"	4'-0"	--	---	-----	-----	4	12"	5'-0"	16	12
4	3	8"	8"	8"	3	3'-0"	3	3'-0"	1	1'-0"	4	10½"	5'-0"	2'-8"	9'-10"	5	10½"	5'-0"	--	---	-----	-----	4	12"	4'-0"	20	8
4	4	8"	8"	8"	3	3'-0"	3	3'-0"	2	2'-0"	4	10"	5'-0"	3'-2"	10'-10"	5	10"	5'-0"	--	---	-----	-----	4	12"	5'-0"	20	12
4	5	8"	8"	8"	3	3'-0"	3	3'-0"	3	3'-0"	4	9½"	5'-0"	3'-8"	11'-10"	5	9½"	5'-0"	--	---	-----	-----	4	12"	6'-0"	20	16
4	6	8"	8"	8"	3	3'-0"	3	3'-0"	4	4'-0"	4	9½"	5'-0"	4'-2"	12'-10"	5	9½"	5'-0"	--	---	-----	-----	4	12"	7'-0"	20	20
5	3	8"	8"	8"	4	4'-0"	4	4'-0"	1	1'-0"	5	10½"	6'-0"	2'-10"	11'-1"	6	10½"	6'-0"	--	---	-----	-----	4	9"	4'-0"	24	8
5	4	8"	8"	8"	4	4'-0"	4	4'-0"	2	2'-0"	4	10"	6'-0"	3'-2"	11'-10"	6	10"	6'-0"	3	10"	2'-6"	4'-10"	4	12"	5'-0"	24	12
5	5	8"	8"	8"	4	4'-0"	4	4'-0"	3	3'-0"	4	9½"	6'-0"	3'-8"	12'-10"	6	9½"	6'-0"	3	9½"	2'-6"	4'-10"	4	12"	6'-0"	24	16
5	6	8"	8"	8"	4	4'-0"	4	4'-0"	4	4'-0"	4	9"	6'-0"	4'-2"	13'-10"	6	9"	6'-0"	--	---	-----	-----	4	12"	7'-0"	24	20
5	7	8"	8"	8"	4	4'-0"	4	4'-0"	5	5'-0"	4	9"	6'-0"	4'-8"	14'-10"	6	9"	6'-0"	--	---	-----	-----	5	12"	8'-0"	24	24
6	4	8¾"	8¾"	8"	5	5'-0"	5	5'-0"	2	2'-0"	5	8"	7'-0"	3'-5"	13'-2"	6	8"	7'-0"	--	---	-----	-----	4	9"	5'-2"	28	12
6	5	8¾"	8¾"	8"	5	5'-0"	5	5'-0"	3	3'-0"	4	8"	7'-0"	3'-9"	14'-0"	6	8"	7'-0"	3	8"	2'-9"	5'- 3"	4	12"	6'-2"	28	16
6	6	8¾"	8¾"	8"	5	5'-0"	5	5'-0"	4	4'-0"	4	7½"	7'-0"	4'-3"	15'-0"	6	7½"	7'-0"	3	7½"	2'-10"	5'-4"	4	12"	7'-2"	28	20
6	7	8¾"	8¾"	8"	5	5'-0"	5	5'-0"	5	5'-0"	4	7½"	7'-0"	4'-9"	16'-0"	6	7½"	7'-0"	3	7½"	3'-0"	5'-9"	5	12"	8'-1"	28	24
6	8	8¾"	8¾"	8"	5	5'-0"	5	5'-0"	6	6'-0"	5	7"	7'-0"	5'-5"	17'-2"	6	7"	7'-0"	--	---	-----	-----	6	12"	9'-1"	28	28
7	4	9¾"	9¾"	8"	6	6'-0"	6	6'-0"	2	2'-0"	4	7"	8'-0"	3'-4"	14'-2"	6	7"	8'-0"	3	7"	2'-11"	5'-8"	4	7½"	5'-3"	32	12
7	6	10"	10"	8"	6	6'-0"	6	6'-0"	4	4'-0"	4	6½"	8'-0"	4'-4"	16'-2"	6	6½"	8'-0"	--	---	-----	-----	4	12"	7'-4"	32	20
7	8	10"	10"	8"	6	6'-0"	6	6'-0"	6	6'-0"	5	6½"	8'-0"	5'-6"	18'-5"	6	6½"	8'-0"	--	---	-----	-----	5	12"	9'-4"	32	28
7	10	10"	10"	8"	6	6'-0"	6	6'-0"	8	8'-0"	5	7½"	8'-0"	6'-6"	20'-5"	7	7½"	8'-0"	3	7½"	3'-8"	7'-2"	6	9½"	11'-4"	32	36
8	4	10¾"	10¾"	8"	7	7'-0"	7	7'-0"	2	2'-0"	4	6"	9'-0"	3'-5"	15'-4"	6	6"	9'-0"	3	6"	3'-2"	6'-1"	4	6½"	5'-5"	36	12
8	6	11"	11"	8"	7	7'-0"	7	7'-0"	4	4'-0"	5	7"	9'-0"	4'-8"	17'-7"	7	7"	9'-0"	--	---	-----	-----	4	11"	7'-6"	36	20
8	8	11¼"	11¼"	8"	7	7'-0"	7	7'-0"	6	6'-0"	5	9"	9'-0"	5'-8"	19'-7"	8	9"	9'-0"	3	9"	3'-5"	6'-7"	5	12"	9'-6"	36	28
8	10	11¼"	11¼"	8"	7	7'-0"	7	7'-0"	8	8'-0"	5	5½"	9'-0"	6'-8"	21'-7"	6	5½"	9'-0"	--	---	-----	-----	6	10½"	11'-6"	36	36
9	4	12"	12"	8"	8	8'-0"	8	8'-0"	2	2'-0"	4	5½"	10'-0"	3'-6"	16'-6"	6	5½"	10'-0"	3	5½"	3'-4"	6'-5"	4	6"	5'-8"	40	12
9	6	12¼"	12¼"	8"	8	8'-0"	8	8'-0"	4	4'-0"	5	8"	10'-0"	4'-9"	18'-9"	8	8"	10'-0"	--	---	-----	-----	4	10"	7'-9"	40	20
9	8	12¼"	12¼"	8"	8	8'-0"	8	8'-0"	6	6'-0"	4	6½"	10'-0"	5'-7"	20'-7"	7	6½"	10'-0"	3	6½"	3'-6"	6'-9"	5	12"	9'-8"	40	28
9	10	12½"	12½"	8"	8	8'-0"	8	8'-0"	8	8'-0"	5	6"	10'-0"	6'-9"	22'-10"	7	6"	10'-0"	--	---	-----	-----	7	12"	11'-8"	40	36
9	12	12½"	12½"	9"	8	8'-0"	8	8'-0"	10	10'-0"	6	7½"	10'-2"	7'-11"	25'-2"	8	7½"	10'-1"	3	7½"	4'-4"	8'-5"	5	5½"	13'-8"	40	44
10	4	13"	13"	8"	9	9'-0"	9	9'-0"	2	2'-0"	5	6"	11'-0"	3'-9"	17'-11"	7	6"	11'-0"	--	---	-----	-----	4	5"	5'-10"	44	12
10	6	13"	13"	8"	9	9'-0"	9	9'-0"	4	4'-0"	5	7½"	11'-0"	4'-9"	19'-11"	8	7½"	11'-0"	3	7½"	3'-6"	6'-10"	4	8"	7'-10"	44	20
10	8	13"	13"	8"	9	9'-0"	9	9'-0"	6	6'-0"	5	7½"	11'-0"	5'-9"	21'-11"	8	7½"	11'-0"	3	7½"	3'-7"	6'-11"	4	12"	9'-10"	44	28
10	10	13"	13"	8"	9	9'-0"	9	9'-0"	8	8'-0"	5	5½"	11'-0"	6'-9"	23'-11"	7	5½"	11'-0"	--	---	-----	-----	6	12"	11'-10"	44	36
10	12	13"	13"	9"	9	9'-0"	9	9'-0"	10	10'-0"	7	7"	11'-2"	8'-3"	26'-7"	8	7"	11'-1"	--	---	-----	-----	5	6"	13'-10"	44	44
12	6	15"	15"	8"	11	11'-0"	11	11'-0"	4	4'-0"	5	6½"	13'-0"	4'-11"	22'-3"	8	6½"	13'-0"	--	---	-----	-----	4	6"	8'-2"	52	20
12	8	15¼"	15¼"	8"	11	11'-0"	11	11'-0"	6	6'-0"	6	6"	13'-0"	6'-2"	24'-5"	8	6"	13'-0"	--	---	-----	-----	4	10"	10'-3"	52	28
12	10	15¼"	15¼"	8"	11	11'-0"	11	11'-0"	8	8'-0"	4	6"	13'-0"	6'-10"	26'-1"	8	6"	13'-0"	4	6"	4'-2"	8'-0"	6	12"	12'-2"	52	36
12	12	15¼"	15¼"	9½"	11	11'-0"	11	11'-0"	10	10'-0"	6	6"	13'-3"	8'-2"	28'-8"	8	6"	13'-3"	--	---	-----	-----	5	6½"	14'-2"	52	44

A COPY OF THE ORIGINAL SEALED AND SIGNED DRAWING IS ON FILE IN THE CENTRAL OFFICE

VDOT
ROAD AND BRIDGE STANDARDS

SHEET 1 OF 2

1002.09

REVISION DATE
07/11

SINGLE BOX CULVERTS

10 TO 20 FT. FILLS

VIRGINIA DEPARTMENT OF TRANSPORTATION

SPECIFICATION REFERENCE

FOR TYPICAL SECTION, NOTES AND OTHER DETAILS, REFER TO STANDARD BCS-DT.

BCS-20

SPAN (FT.)	HGHT (FT.)	REINFORCING STEEL (LBS/LONG. JT)	QUAN./LF CONCRETE CLASS A4 (CY/LF)	QUAN./LF REINFORCING STEEL (LBS/LF)	HEADWALLS G HEADWALL LENGTH	HEADWALLS HWI SIZE	HEADWALLS HWI LENGTH	HEADWALLS INLET CONCRETE CL. A4 (CY)	HEADWALLS INLET REINFORCING STEEL (LBS)	HEADWALLS OUTLET CONCRETE CL. A4 (CY)	HEADWALLS OUTLET REINFORCING STEEL (LBS)	HEADWALLS WINGWALL
3	3	16.184	0.400	46.498	5'-10"	6	5'-6"	1.038	33.044	1.042	33.044	A
3	4	17.596	0.450	44.657	5'-10"	6	5'-6"	1.131	33.044	1.134	33.044	C
4	3	19.524	0.449	50.604	6'-10"	6	6'-6"	1.139	39.052	1.146	39.052	A
4	4	20.936	0.498	56.391	6'-10"	6	6'-6"	1.232	39.052	1.239	39.052	C
4	5	22.348	0.547	62.489	6'-10"	6	6'-6"	1.324	39.052	1.332	39.052	E
4	6	23.760	0.596	67.017	6'-10"	6	6'-6"	1.417	39.052	1.424	39.052	G
5	3	22.864	0.497	75.669	7'-10"	6	7'-6"	1.240	45.060	1.251	45.060	A
5	4	24.276	0.546	79.112	7'-10"	6	7'-6"	1.333	45.060	1.343	45.060	C
5	5	25.688	0.595	86.230	7'-10"	6	7'-6"	1.426	45.060	1.436	45.060	E
5	6	27.100	0.644	84.196	7'-10"	6	7'-6"	1.518	45.060	1.529	45.060	G
5	7	28.512	0.693	94.817	7'-10"	6	7'-6"	1.611	45.060	1.621	45.060	I
6	4	27.616	0.627	108.307	8'-10"	6	8'-6"	1.432	51.068	1.446	51.068	C
6	5	29.028	0.676	107.430	8'-10"	6	8'-6"	1.524	51.068	1.538	51.068	E
6	6	30.440	0.725	117.454	8'-10"	6	8'-6"	1.617	51.068	1.631	51.068	G
6	7	31.852	0.773	129.488	8'-10"	6	8'-6"	1.710	51.068	1.724	51.068	I
6	8	33.264	0.821	157.284	8'-10"	6	8'-6"	1.803	51.068	1.816	51.068	K
7	4	30.956	0.731	129.127	9'-10"	6	9'-6"	1.543	57.076	1.560	57.076	D
7	6	33.780	0.843	126.868	9'-10"	6	9'-6"	1.727	57.076	1.744	57.076	H
7	8	36.604	0.938	170.365	9'-10"	6	9'-6"	1.912	57.076	1.929	57.076	L
7	10	39.428	1.033	219.296	9'-10"	6	9'-6"	2.098	57.076	2.115	57.076	P
8	4	34.296	0.846	159.600	10'-10"	6	10'-6"	1.630	63.084	1.650	63.084	D
8	6	37.120	0.958	172.840	10'-10"	6	10'-6"	1.813	63.084	1.833	63.084	H
8	8	39.944	1.070	190.718	10'-10"	6	10'-6"	1.996	63.084	2.016	63.084	L
8	10	42.768	1.165	238.930	10'-10"	6	10'-6"	2.181	63.084	2.202	63.084	P
9	4	37.636	0.990	186.271	11'-10"	6	11'-6"	1.707	69.092	1.731	69.092	D
9	6	40.460	1.105	190.592	11'-10"	6	11'-6"	1.889	69.092	1.913	69.092	H
9	8	43.284	1.202	207.534	11'-10"	6	11'-6"	2.075	69.092	2.098	69.092	L
9	10	46.108	1.312	270.322	11'-10"	6	11'-6"	2.257	69.092	2.281	69.092	P
9	12	48.932	1.492	338.890	11'-10"	6	11'-6"	2.442	69.092	2.466	69.092	T
10	4	40.976	1.132	222.972	12'-10"	6	12'-6"	1.780	75.100	1.807	75.100	D
10	6	43.800	1.229	235.180	12'-10"	6	12'-6"	1.966	75.100	1.993	75.100	H
10	8	46.624	1.328	242.383	12'-10"	6	12'-6"	2.151	75.100	2.178	75.100	L
10	10	49.448	1.423	291.088	12'-10"	6	12'-6"	2.337	75.100	2.364	75.100	P
10	12	52.272	1.601	398.098	12'-10"	6	12'-6"	2.522	75.100	2.549	75.100	T
12	6	50.480	1.551	284.965	14'-10"	6	14'-6"	2.094	87.116	2.128	87.116	H
12	8	53.304	1.665	354.490	14'-10"	6	14'-6"	2.293	87.116	2.326	87.116	M
12	10	56.128	1.764	343.084	14'-10"	6	14'-6"	2.478	87.116	2.512	87.116	Q
12	12	58.952	1.991	427.061	14'-10"	6	14'-6"	2.663	87.116	2.697	87.116	U

A COPY OF THE ORIGINAL SEALED AND SIGNED DRAWING IS ON FILE IN THE CENTRAL OFFICE

SPECIFICATION REFERENCE

SINGLE BOX CULVERTS

10 TO 20 FT. FILLS

VIRGINIA DEPARTMENT OF TRANSPORTATION

VDOT

ROAD AND BRIDGE STANDARDS

REVISION DATE 07/11

SHEET 2 OF 2

1002.10

BCS-30

FOR TYPICAL SECTION, NOTES AND OTHER DETAILS, REFER TO STANDARD BCS-DT.

DIMENSIONS					REINFORCING STEEL																						
SPAN	HGHT	T1	T2	T3							BH1					BH2			BH3				BV1				
(FT.)	(FT.)	TOP SLAB (IN.)	BOTTOM SLAB (IN.)	WALL (IN.)	A	B	C	D	E	F	SIZE	SPACING C-C	a	b	LENGTH	SIZE	SPACING C-C	LENGTH	SIZE	SPACING C-C	a	LENGTH	SIZE	SPACING C-C	LENGTH	NO. BL1 #4 BARS	NO. BL2 #3 BARS
3	3	8"	8"	8"	2	2'-0"	2	2'-0"	1	1'-0"	4	11½"	4'-0"	2'-8"	8'-10"	5	11½"	4'-0"	--	---	----	-----	4	12"	4'-0"	16	8
3	4	8"	8"	8"	2	2'-0"	2	2'-0"	2	2'-0"	4	11"	4'-0"	3'-2"	9'-10"	5	11"	4'-0"	--	---	----	-----	4	12"	5'-0"	16	12
4	3	8"	8"	8"	3	3'-0"	3	3'-0"	1	1'-0"	4	10½"	5'-0"	2'-8"	9'-10"	6	10½"	5'-0"	4	10½"	2'-4"	4'-5"	4	11½"	4'-0"	20	8
4	4	8"	8"	8"	3	3'-0"	3	3'-0"	2	2'-0"	4	10"	5'-0"	3'-2"	10'-10"	6	10"	5'-0"	3	10"	2'-4"	4'-5"	4	12"	5'-0"	20	12
4	5	8"	8"	8"	3	3'-0"	3	3'-0"	3	3'-0"	4	9½"	5'-0"	3'-8"	11'-10"	6	9½"	5'-0"	3	9½"	2'-6"	4'-10"	4	12"	6'-0"	20	16
4	6	8"	8"	8"	3	3'-0"	3	3'-0"	4	4'-0"	4	9½"	5'-0"	4'-2"	12'-10"	6	9½"	5'-0"	3	9½"	2'-9"	5'-3"	5	12"	7'-0"	20	20
5	3	9½"	9½"	8"	4	4'-0"	4	4'-0"	1	1'-0"	4	8½"	6'-0"	2'-10"	11'-1"	6	8½"	6'-0"	3	8½"	2'-6"	4'-10"	4	9"	4'-3"	24	8
5	4	9¾"	9¾"	8"	4	4'-0"	4	4'-0"	2	2'-0"	4	8"	6'-0"	3'-4"	12'-2"	6	8"	6'-0"	--	---	----	-----	4	12"	5'-3"	24	12
5	5	9¾"	9¾"	8"	4	4'-0"	4	4'-0"	3	3'-0"	4	8"	6'-0"	3'-10"	13'-2"	6	8"	6'-0"	--	---	----	-----	4	12"	6'-3"	24	16
5	6	9¾"	9¾"	8"	4	4'-0"	4	4'-0"	4	4'-0"	4	8"	6'-0"	4'-4"	14'-2"	6	8"	6'-0"	--	---	----	-----	5	12"	7'-3"	24	20
5	7	9¾"	9¾"	8"	4	4'-0"	4	4'-0"	5	5'-0"	4	8"	6'-0"	4'-10"	15'-2"	6	8"	6'-0"	--	---	----	-----	6	12"	8'-3"	24	24
6	4	11½"	11½"	8"	5	5'-0"	5	5'-0"	2	2'-0"	4	7"	7'-0"	3'-6"	13'-5"	6	7"	7'-0"	--	---	----	-----	4	12"	5'-7"	28	12
6	5	11½"	11½"	8"	5	5'-0"	5	5'-0"	3	3'-0"	4	6½"	7'-0"	4'-0"	14'-5"	6	6½"	7'-0"	--	---	----	-----	4	12"	6'-7"	28	16
6	6	11½"	11½"	8"	5	5'-0"	5	5'-0"	4	4'-0"	4	6½"	7'-0"	4'-6"	15'-5"	6	6½"	7'-0"	--	---	----	-----	4	12"	7'-7"	28	20
6	7	11½"	11½"	8"	5	5'-0"	5	5'-0"	5	5'-0"	4	6½"	7'-0"	5'-0"	16'-5"	6	6½"	7'-0"	--	---	----	-----	5	12"	8'-6"	28	24
6	8	11½"	11½"	8"	5	5'-0"	5	5'-0"	6	6'-0"	4	6½"	7'-0"	5'-6"	17'-5"	6	6½"	7'-0"	--	---	----	-----	6	10½"	9'-7"	28	28
7	4	13"	13"	8"	6	6'-0"	6	6'-0"	2	2'-0"	4	6"	8'-0"	3'-7"	14'-8"	6	6"	8'-0"	--	---	----	-----	4	10½"	5'-10"	32	12
7	6	13"	13"	8"	6	6'-0"	6	6'-0"	4	4'-0"	5	7½"	8'-0"	4'-9"	16'-11"	8	7½"	8'-0"	--	---	----	-----	4	12"	7'-10"	32	20
7	8	13"	13"	8"	6	6'-0"	6	6'-0"	6	6'-0"	5	7"	8'-0"	5'-9"	18'-11"	7	7"	8'-0"	--	---	----	-----	6	12"	9'-10"	32	28
7	10	13"	13"	9"	6	6'-0"	6	6'-0"	8	8'-0"	5	5½"	8'-2"	6'-9"	21'-1"	6	5½"	8'-1"	--	---	----	-----	5	5½"	11'-10"	32	36
8	4	13¾"	13¾"	8"	7	7'-0"	7	7'-0"	2	2'-0"	5	8"	9'-0"	3'-10"	16'-0"	8	8"	9'-0"	3	8"	3'-2"	6'-1"	4	8"	5'-11"	36	12
8	6	13¾"	13¾"	8"	7	7'-0"	7	7'-0"	4	4'-0"	4	8"	9'-0"	4'-8"	17'-10"	8	8"	9'-0"	3	8"	3'-3"	6'-2"	4	12"	7'-11"	36	20
8	8	13¾"	13¾"	8"	7	7'-0"	7	7'-0"	6	6'-0"	5	6"	9'-0"	5'-10"	20'-0"	7	6"	9'-0"	--	---	----	-----	6	12"	9'-11"	36	28
8	10	13½"	13½"	9½"	7	7'-0"	7	7'-0"	8	8'-0"	5	6"	9'-3"	6'-10"	22'-3"	7	6"	9'-3"	--	---	----	-----	5	6"	11'-11"	36	36
9	4	15¼"	15¼"	8"	8	8'-0"	8	8'-0"	2	2'-0"	4	7½"	10'-0"	3'-10"	17'-1"	8	7½"	10'-0"	4	7½"	3'-4"	6'-5"	4	7½"	6'-2"	40	12
9	6	15½"	15½"	8"	8	8'-0"	8	8'-0"	4	4'-0"	4	7½"	10'-0"	4'-10"	19'-1"	8	7½"	10'-0"	3	7½"	3'-4"	6'-6"	4	12"	8'-3"	40	20
9	8	15½"	15½"	8"	8	8'-0"	8	8'-0"	6	6'-0"	4	7½"	10'-0"	5'-10"	21'-1"	8	7½"	10'-0"	4	7½"	3'-9"	7'-3"	6	12"	10'-2"	40	28
9	10	15½"	15½"	9"	8	8'-0"	8	8'-0"	8	8'-0"	5	5½"	10'-0"	7'-0"	23'-6"	7	5½"	10'-1"	--	---	----	-----	5	6"	12'-2"	40	36
9	12	15¼"	15¼"	11"	8	8'-0"	8	8'-0"	10	10'-0"	6	5½"	10'-6"	8'-2"	25'-11"	7	5½"	10'-6"	--	---	----	-----	7	9"	14'-2"	40	44
10	4	17"	17"	8"	9	9'-0"	9	9'-0"	2	2'-0"	5	5½"	11'-0"	4'-2"	18'-7"	7	5½"	11'-0"	--	---	----	-----	4	7½"	6'-6"	44	12
10	6	17¼"	17¼"	8"	9	9'-0"	9	9'-0"	4	4'-0"	5	7"	11'-0"	5'-2"	20'-7"	8	7"	11'-0"	--	---	----	-----	4	12"	8'-6"	44	20
10	8	17¼"	17¼"	8"	9	9'-0"	9	9'-0"	6	6'-0"	5	7"	11'-0"	6'-2"	22'-7"	8	7"	11'-0"	--	---	----	-----	6	12"	10'-6"	44	28
10	10	17¼"	17¼"	9"	9	9'-0"	9	9'-0"	8	8'-0"	6	6½"	11'-2"	7'-4"	24'-11"	8	6½"	11'-1"	--	---	----	-----	5	6"	12'-6"	44	36
10	12	17"	17"	11"	9	9'-0"	9	9'-0"	10	10'-0"	6	6"	11'-6"	8'-3"	27'-3"	8	6"	11'-1"	--	---	----	-----	7	9½"	14'-5"	44	44
12	6	19½"	19½"	8"	11	11'-0"	11	11'-0"	4	4'-0"	4	5½"	13'-0"	5'-2"	22'-9"	8	5½"	13'-0"	--	---	----	-----	4	12"	8'-11"	52	20
12	8	20"	20"	8"	11	11'-0"	11	11'-0"	6	6'-0"	5	6"	13'-0"	6'-4"	25'-1"	8	6"	13'-0"	--	---	----	-----	5	12"	11'-0"	52	28
12	10	20¼"	20¼"	8½"	11	11'-0"	11	11'-0"	8	8'-0"	6	5½"	13'-0"	7'-7"	27'-4"	8	5½"	13'-0"	--	---	----	-----	6	9½"	13'-0"	52	36
12	12	20¼"	20¼"	11"	11	11'-0"	11	11'-0"	10	10'-0"	6	5½"	13'-6"	8'-7"	29'-9"	8	5½"	13'-6"	--	---	----	-----	7	9½"	15'-0"	52	44

A COPY OF THE ORIGINAL SEALED AND SIGNED DRAWING IS ON FILE IN THE CENTRAL OFFICE

VDOT
ROAD AND BRIDGE STANDARDS

SHEET 1 OF 2
1002.11

REVISION DATE
07/11

SINGLE BOX CULVERTS

20 TO 30 FT. FILLS

VIRGINIA DEPARTMENT OF TRANSPORTATION

SPECIFICATION REFERENCE

FOR TYPICAL SECTION, NOTES AND OTHER DETAILS, REFER TO STANDARD BCS-DT.

BCS-30

SPAN (FT.)	HGHT (FT.)	REINFORCING STEEL (LBS/LONG. JT)	QUAN./LF CONCRETE CLASS A4 (CY/LF)	QUAN./LF REINFORCING STEEL (LBS/LF)	HEADWALLS G HEADWALL LENGTH	HEADWALLS HWI SIZE	HEADWALLS HWI LENGTH	HEADWALLS INLET CONCRETE CL. A4 (CY)	HEADWALLS INLET REINFORCING STEEL (LBS)	HEADWALLS OUTLET CONCRETE CL. A4 (CY)	HEADWALLS OUTLET REINFORCING STEEL (LBS)	HEADWALLS WINGWALL
3	3	16.184	0.401	41.355	5'-10"	6	5'-6"	1.038	33.044	1.042	33.044	A
3	4	17.596	0.450	46.606	5'-10"	6	5'-6"	1.131	33.044	1.134	33.044	C
4	3	19.524	0.448	69.319	6'-10"	6	6'-6"	1.139	39.052	1.146	39.052	A
4	4	20.936	0.497	69.842	6'-10"	6	6'-6"	1.232	39.052	1.239	39.052	C
4	5	22.348	0.546	77.408	6'-10"	6	6'-6"	1.324	39.052	1.332	39.052	E
4	6	23.760	0.595	87.946	6'-10"	6	6'-6"	1.417	39.052	1.424	39.052	G
5	3	22.864	0.555	85.770	7'-10"	6	7'-6"	1.259	45.060	1.269	45.060	B
5	4	24.276	0.614	81.559	7'-10"	6	7'-6"	1.352	45.060	1.362	45.060	D
5	5	25.688	0.663	86.403	7'-10"	6	7'-6"	1.444	45.060	1.455	45.060	F
5	6	27.100	0.712	96.716	7'-10"	6	7'-6"	1.537	45.060	1.547	45.060	H
5	7	28.512	0.760	109.922	7'-10"	6	7'-6"	1.630	45.060	1.640	45.060	J
6	4	27.616	0.752	100.722	8'-10"	6	8'-6"	1.442	51.068	1.456	51.068	D
6	5	29.028	0.801	111.159	8'-10"	6	8'-6"	1.535	51.068	1.548	51.068	F
6	6	30.440	0.850	116.466	8'-10"	6	8'-6"	1.627	51.068	1.641	51.068	H
6	7	31.852	0.898	128.210	8'-10"	6	8'-6"	1.720	51.068	1.734	51.068	J
6	8	33.264	0.946	147.176	8'-10"	6	8'-6"	1.813	51.068	1.827	51.068	L
7	4	30.956	0.898	125.975	9'-10"	6	9'-6"	1.523	57.076	1.540	57.076	D
7	6	33.780	0.994	167.916	9'-10"	6	9'-6"	1.708	57.076	1.726	57.076	H
7	8	36.604	1.091	188.876	9'-10"	6	9'-6"	1.894	57.076	1.911	57.076	L
7	10	39.428	1.261	241.896	9'-10"	6	9'-6"	2.079	57.076	2.096	57.076	P
8	4	34.296	1.017	180.750	10'-10"	6	10'-6"	1.602	63.084	1.622	63.084	D
8	6	37.120	1.117	168.456	10'-10"	6	10'-6"	1.787	63.084	1.808	63.084	H
8	8	39.944	1.212	226.032	10'-10"	6	10'-6"	1.973	63.084	1.993	63.084	L
8	10	42.768	1.407	260.099	10'-10"	6	10'-6"	2.160	63.084	2.181	63.084	P
9	4	37.636	1.197	198.733	11'-10"	6	11'-6"	1.685	69.092	1.709	69.092	E
9	6	40.460	1.312	192.297	11'-10"	6	11'-6"	1.868	69.092	1.891	69.092	I
9	8	43.284	1.407	234.542	11'-10"	6	11'-6"	2.053	69.092	2.077	69.092	M
9	10	46.108	1.579	293.978	11'-10"	6	11'-6"	2.239	69.092	2.262	69.092	Q
9	12	48.932	1.846	389.542	11'-10"	6	11'-6"	2.383	69.092	2.406	69.092	U
10	4	40.976	1.410	236.138	12'-10"	6	12'-6"	1.737	75.100	1.764	75.100	E
10	6	43.800	1.527	228.503	12'-10"	6	12'-6"	1.919	75.100	1.946	75.100	I
10	8	46.624	1.624	258.918	12'-10"	6	12'-6"	2.104	75.100	2.131	75.100	M
10	10	49.448	1.795	349.512	12'-10"	6	12'-6"	2.290	75.100	2.317	75.100	Q
10	12	52.272	2.066	413.087	12'-10"	6	12'-6"	2.411	75.100	2.437	75.100	U
12	6	50.480	1.921	279.204	14'-10"	6	14'-6"	2.015	87.116	2.049	87.116	I
12	8	53.304	2.058	318.713	14'-10"	6	14'-6"	2.190	87.116	2.224	87.116	M
12	10	56.128	2.210	436.661	14'-10"	6	14'-6"	2.370	87.116	2.404	87.116	Q
12	12	58.952	2.548	488.548	14'-10"	6	14'-6"	2.485	87.116	2.518	87.116	U

A COPY OF THE ORIGINAL SEALED AND SIGNED DRAWING IS ON FILE IN THE CENTRAL OFFICE

SPECIFICATION REFERENCE

SINGLE BOX CULVERTS

20 TO 30 FT. FILLS

VIRGINIA DEPARTMENT OF TRANSPORTATION

VDOT

ROAD AND BRIDGE STANDARDS

REVISION DATE 07/11

SHEET 2 OF 2

1002.12

BCS-40

FOR TYPICAL SECTION, NOTES AND OTHER DETAILS, REFER TO STANDARD BCS-DT.

DIMENSIONS					REINFORCING STEEL																							
SPAN	HGHT	T1	T2	T3							BH1					BH2			BH3				BV1				
(FT.)	(FT.)	TOP SLAB (IN.)	BOTTOM SLAB (IN.)	WALL (IN.)	A	B	C	D	E	F	SIZE	SPACING C-C	a	b	LENGTH	SIZE	SPACING C-C	LENGTH	SIZE	SPACING C-C	a	LENGTH	SIZE	SPACING C-C	LENGTH	NO. BL1 #4 BARS	NO. BL2 #3 BARS
3	3	8"	8"	8"	2	2'-0"	2	2'-0"	1	1'-0"	4	9"	4'-0"	2'-8"	8'-10"	5	9"	4'-0"	3	9"	2'-2"	4'-1"	4	12"	4'-0"	16	8
3	4	8"	8"	8"	2	2'-0"	2	2'-0"	2	2'-0"	4	9"	4'-0"	3'-2"	9'-10"	5	9"	4'-0"	--	---	-----	-----	4	12"	5'-0"	16	12
4	3	9¼"	9¼"	8"	3	3'-0"	3	3'-0"	1	1'-0"	4	9"	5'-0"	2'-10"	10'-1"	6	9"	5'-0"	--	---	-----	-----	4	12"	4'-2"	20	8
4	4	9"	9"	8"	3	3'-0"	3	3'-0"	2	2'-0"	4	8½"	5'-0"	3'-3"	11'-0"	6	8½"	5'-0"	--	---	-----	-----	4	12"	5'-2"	20	12
4	5	9"	9"	8"	3	3'-0"	3	3'-0"	3	3'-0"	4	8½"	5'-0"	3'-9"	12'-0"	6	8½"	5'-0"	--	---	-----	-----	4	12"	6'-2"	20	16
4	6	9¼"	9¼"	8"	3	3'-0"	3	3'-0"	4	4'-0"	4	8½"	5'-0"	4'-4"	13'-1"	6	8½"	5'-0"	--	---	-----	-----	6	12"	7'-2"	20	20
5	3	11¾"	11¾"	8"	4	4'-0"	4	4'-0"	1	1'-0"	4	7½"	6'-0"	3'-0"	11'-6"	6	7½"	6'-0"	--	---	-----	-----	4	11½"	4'-7"	24	8
5	4	11¾"	11¾"	8"	4	4'-0"	4	4'-0"	2	2'-0"	4	7"	6'-0"	3'-6"	12'-6"	6	7"	6'-0"	--	---	-----	-----	4	12"	5'-7"	24	12
5	5	12"	12"	8"	4	4'-0"	4	4'-0"	3	3'-0"	4	7"	6'-0"	4'-0"	13'-6"	6	7"	6'-0"	--	---	-----	-----	4	12"	6'-8"	24	16
5	6	12"	12"	8"	4	4'-0"	4	4'-0"	4	4'-0"	4	7"	6'-0"	4'-6"	14'-6"	6	7"	6'-0"	--	---	-----	-----	5	12"	7'-8"	24	20
5	7	11¼"	11¼"	8"	4	4'-0"	4	4'-0"	5	5'-0"	4	7"	6'-0"	5'-0"	15'-5"	6	7"	6'-0"	--	---	-----	-----	6	10½"	8'-6"	24	24
6	4	13"	13"	8"	5	5'-0"	5	5'-0"	2	2'-0"	4	6"	7'-0"	3'-7"	13'-8"	6	6"	7'-0"	--	---	-----	-----	4	12"	5'-10"	28	12
6	5	13"	13"	8"	5	5'-0"	5	5'-0"	3	3'-0"	4	6"	7'-0"	4'-1"	14'-8"	6	6"	7'-0"	--	---	-----	-----	4	12"	6'-10"	28	16
6	6	13"	13"	8"	5	5'-0"	5	5'-0"	4	4'-0"	4	6"	7'-0"	4'-7"	15'-8"	6	6"	7'-0"	--	---	-----	-----	5	12"	7'-10"	28	20
6	7	13"	13"	8"	5	5'-0"	5	5'-0"	5	5'-0"	4	6"	7'-0"	5'-2"	16'-8"	6	6"	7'-0"	--	---	-----	-----	6	12"	8'-10"	28	24
6	8	13"	13"	8½"	5	5'-0"	5	5'-0"	6	6'-0"	4	6"	7'-1"	5'-8"	17'-9"	6	6"	7'-1"	--	---	-----	-----	6	10½"	9'-10"	28	28
7	4	14¾"	14¾"	8"	6	6'-0"	6	6'-0"	2	2'-0"	4	5"	8'-0"	3'-9"	15'-0"	6	5"	8'-0"	--	---	-----	-----	4	12"	6'-1"	32	12
7	6	14¾"	14¾"	8"	6	6'-0"	6	6'-0"	4	4'-0"	4	5"	8'-0"	4'-9"	17'-0"	6	5"	8'-0"	--	---	-----	-----	5	12"	8'-1"	32	20
7	8	14¾"	14¾"	8"	6	6'-0"	6	6'-0"	6	6'-0"	4	5"	8'-0"	5'-9"	19'-0"	6	5"	8'-0"	--	---	-----	-----	5	7½"	10'-1"	32	28
7	10	14½"	14½"	10½"	6	6'-0"	6	6'-0"	8	8'-0"	6	8"	8'-5"	7'-1"	21'-9"	8	8"	8'-4"	--	---	-----	-----	6	7"	12'-1"	32	36
8	4	17"	17"	8"	7	7'-0"	7	7'-0"	2	2'-0"	4	6"	9'-0"	3'-11"	16'-4"	7	6"	9'-0"	--	---	-----	-----	4	12"	6'-6"	36	12
8	6	17¼"	17¼"	8"	7	7'-0"	7	7'-0"	4	4'-0"	4	6"	9'-0"	5'-0"	18'-5"	7	6"	9'-0"	--	---	-----	-----	5	12"	8'-6"	36	20
8	8	17¼"	17¼"	8"	7	7'-0"	7	7'-0"	6	6'-0"	5	6"	9'-0"	6'-2"	20'-7"	7	6"	9'-0"	--	---	-----	-----	5	7"	10'-6"	36	28
8	10	17"	17"	10½"	7	7'-0"	7	7'-0"	8	8'-0"	6	7½"	9'-5"	7'-3"	23'-2"	8	7½"	9'-4"	--	---	-----	-----	6	7"	12'-5"	36	36
9	4	18¾"	18¾"	8"	8	8'-0"	8	8'-0"	2	2'-0"	4	5½"	10'-0"	4'-1"	17'-8"	7	5½"	10'-0"	--	---	-----	-----	4	12"	6'-9"	40	12
9	6	18¾"	18¾"	8"	8	8'-0"	8	8'-0"	4	4'-0"	4	5½"	10'-0"	5'-1"	19'-8"	7	5½"	10'-0"	--	---	-----	-----	4	12"	8'-9"	40	20
9	8	18¾"	18¾"	8"	8	8'-0"	8	8'-0"	6	6'-0"	4	5½"	10'-0"	6'-1"	21'-8"	7	5½"	10'-0"	--	---	-----	-----	5	7½"	10'-9"	40	28
9	10	18½"	18½"	10"	8	8'-0"	8	8'-0"	8	8'-0"	6	7"	10'-4"	7'-5"	24'-4"	8	7"	10'-3"	--	---	-----	-----	5	4½"	12'-8"	40	36
9	12	18½"	18½"	12½"	8	8'-0"	8	8'-0"	10	10'-0"	7	7"	10'-9"	8'-8"	27'-1"	8	7"	10'-9"	--	---	-----	-----	6	6"	14'-8"	40	44
10	4	20"	20"	8"	9	9'-0"	9	9'-0"	2	2'-0"	5	6½"	11'-0"	4'-5"	19'-1"	8	6½"	11'-0"	--	---	-----	-----	4	11"	7'-0"	44	12
10	6	20¼"	20¼"	8"	9	9'-0"	9	9'-0"	4	4'-0"	5	6½"	11'-0"	5'-5"	21'-1"	8	6½"	11'-0"	--	---	-----	-----	4	12"	9'-0"	44	20
10	8	20½"	20½"	8"	9	9'-0"	9	9'-0"	6	6'-0"	5	6"	11'-0"	6'-5"	23'-2"	8	6"	11'-0"	--	---	-----	-----	5	7½"	11'-1"	44	28
10	10	20¾"	20¾"	9½"	9	9'-0"	9	9'-0"	8	8'-0"	6	6"	11'-3"	7'-7"	25'-7"	8	6"	11'-3"	--	---	-----	-----	5	4½"	13'-1"	44	36
10	12	20½"	20½"	12½"	9	9'-0"	9	9'-0"	10	10'-0"	6	5½"	11'-9"	8'-7"	28'-1"	8	5½"	11'-9"	--	---	-----	-----	6	6"	15'-1"	44	44
12	6	23¼"	23¼"	8"	11	11'-0"	11	11'-0"	4	4'-0"	5	5½"	13'-0"	5'-8"	23'-7"	8	5½"	13'-0"	--	---	-----	-----	4	9½"	9'-6"	52	20
12	8	23¼"	23¼"	8"	11	11'-0"	11	11'-0"	6	6'-0"	5	5½"	13'-0"	6'-8"	25'-7"	8	5½"	13'-0"	--	---	-----	-----	5	8"	11'-6"	52	28
12	10	23"	23"	9½"	11	11'-0"	11	11'-0"	8	8'-0"	5	5"	13'-3"	7'-7"	27'-10"	8	5"	13'-3"	--	---	-----	-----	5	5"	13'-5"	52	36
12	12	22¾"	22¾"	12"	11	11'-0"	11	11'-0"	10	10'-0"	6	5"	13'-8"	8'-10"	30'-6"	8	5"	13'-7"	--	---	-----	-----	7	9½"	15'-7"	52	44

A COPY OF THE ORIGINAL SEALED AND SIGNED DRAWING IS ON FILE IN THE CENTRAL OFFICE

VDOT
ROAD AND BRIDGE STANDARDS

SHEET 1 OF 2 | REVISION DATE
1002.13 | 07/11

SINGLE BOX CULVERTS

30 TO 40 FT. FILLS

VIRGINIA DEPARTMENT OF TRANSPORTATION

SPECIFICATION REFERENCE

FOR TYPICAL SECTION, NOTES AND OTHER DETAILS, REFER TO STANDARD BCS-DT.

BCS-40

SPAN (FT.)	HGHT (FT.)	REINFORCING STEEL (LBS/LONG. JT)	QUAN./LF CONCRETE CLASS A4 (CY/LF)	QUAN./LF REINFORCING STEEL (LBS/LF)	HEADWALLS G HEADWALL LENGTH	HEADWALLS HWI SIZE	HEADWALLS HWI LENGTH	HEADWALLS INLET CONCRETE CL. A4 (CY)	HEADWALLS INLET REINFORCING STEEL (LBS)	HEADWALLS OUTLET CONCRETE CL. A4 (CY)	HEADWALLS OUTLET REINFORCING STEEL (LBS)	HEADWALLS WINGWALL
3	3	16.184	0.400	55.206	5'-10"	6	5'-6"	1.038	33.044	1.042	33.044	A
3	4	17.596	0.449	51.804	5'-10"	6	5'-6"	1.131	33.044	1.134	33.044	C
4	3	19.524	0.490	61.854	6'-10"	6	6'-6"	1.161	39.052	1.169	39.052	B
4	4	20.936	0.530	68.673	6'-10"	6	6'-6"	1.235	39.052	1.242	39.052	C
4	5	22.348	0.579	73.399	6'-10"	6	6'-6"	1.328	39.052	1.335	39.052	E
4	6	23.760	0.636	90.283	6'-10"	6	6'-6"	1.440	39.052	1.447	39.052	H
5	3	22.864	0.643	81.426	7'-10"	6	7'-6"	1.259	45.060	1.269	45.060	B
5	4	24.276	0.692	90.093	7'-10"	6	7'-6"	1.352	45.060	1.362	45.060	D
5	5	25.688	0.750	95.374	7'-10"	6	7'-6"	1.444	45.060	1.455	45.060	F
5	6	27.100	0.799	106.254	7'-10"	6	7'-6"	1.537	45.060	1.547	45.060	H
5	7	28.512	0.818	123.095	7'-10"	6	7'-6"	1.630	45.060	1.640	45.060	J
6	4	27.616	0.819	112.841	8'-10"	6	8'-6"	1.437	51.068	1.451	51.068	D
6	5	29.028	0.868	118.353	8'-10"	6	8'-6"	1.530	51.068	1.544	51.068	F
6	6	30.440	0.916	129.740	8'-10"	6	8'-6"	1.623	51.068	1.636	51.068	H
6	7	31.852	0.965	144.111	8'-10"	6	8'-6"	1.715	51.068	1.729	51.068	J
6	8	33.264	1.045	156.235	8'-10"	6	8'-6"	1.808	51.068	1.822	51.068	L
7	4	30.956	0.987	143.621	9'-10"	6	9'-6"	1.512	57.076	1.529	57.076	D
7	6	33.780	1.084	161.807	9'-10"	6	9'-6"	1.698	57.076	1.715	57.076	H
7	8	36.604	1.181	188.072	9'-10"	6	9'-6"	1.883	57.076	1.900	57.076	L
7	10	39.428	1.453	266.363	9'-10"	6	9'-6"	2.032	57.076	2.049	57.076	P
8	4	34.296	1.206	159.065	10'-10"	6	10'-6"	1.590	63.084	1.611	63.084	E
8	6	37.120	1.318	176.663	10'-10"	6	10'-6"	1.773	63.084	1.794	63.084	I
8	8	39.944	1.412	236.248	10'-10"	6	10'-6"	1.959	63.084	1.979	63.084	M
8	10	42.768	1.690	298.216	10'-10"	6	10'-6"	2.107	63.084	2.127	63.084	Q
9	4	37.636	1.421	186.129	11'-10"	6	11'-6"	1.642	69.092	1.666	69.092	E
9	6	40.460	1.519	197.639	11'-10"	6	11'-6"	1.828	69.092	1.851	69.092	I
9	8	43.284	1.615	230.749	11'-10"	6	11'-6"	2.013	69.092	2.037	69.092	M
9	10	46.108	1.851	336.193	11'-10"	6	11'-6"	2.162	69.092	2.185	69.092	Q
9	12	48.932	2.201	425.353	11'-10"	6	11'-6"	2.202	69.092	2.224	69.092	U
10	4	40.976	1.621	231.746	12'-10"	6	12'-6"	1.691	75.100	1.718	75.100	E
10	6	43.800	1.736	244.494	12'-10"	6	12'-6"	1.872	75.100	1.899	75.100	I
10	8	46.624	1.848	296.723	12'-10"	6	12'-6"	2.054	75.100	2.081	75.100	M
10	10	49.448	2.081	395.781	12'-10"	6	12'-6"	2.194	75.100	2.221	75.100	Q
10	12	52.272	2.461	463.231	12'-10"	6	12'-6"	2.236	75.100	2.262	75.100	U
12	6	50.480	2.227	324.329	14'-10"	6	14'-6"	1.953	87.116	1.987	87.116	J
12	8	53.304	2.323	356.451	14'-10"	6	14'-6"	2.138	87.116	2.172	87.116	N
12	10	56.128	2.523	431.964	14'-10"	6	14'-6"	2.287	87.116	2.320	87.116	R
12	12	58.952	2.942	534.328	14'-10"	6	14'-6"	2.327	87.116	2.359	87.116	V

A COPY OF THE ORIGINAL SEALED AND SIGNED DRAWING IS ON FILE IN THE CENTRAL OFFICE

SPECIFICATION REFERENCE

SINGLE BOX CULVERTS

30 TO 40 FT. FILLS

VIRGINIA DEPARTMENT OF TRANSPORTATION

VDOT

ROAD AND BRIDGE STANDARDS

REVISION DATE 07/11

SHEET 2 OF 2

1002.14

BCS-50

FOR TYPICAL SECTION, NOTES AND OTHER DETAILS, REFER TO STANDARD BCS-DT.

DIMENSIONS					REINFORCING STEEL																						
SPAN	HGHT	T1	T2	T3							BH1					BH2			BH3				BV1				
(FT.)	(FT.)	TOP SLAB (IN.)	BOTTOM SLAB (IN.)	WALL (IN.)	A	B	C	D	E	F	SIZE	SPACING C-C	a	b	LENGTH	SIZE	SPACING C-C	LENGTH	SIZE	SPACING C-C	a	LENGTH	SIZE	SPACING C-C	LENGTH	NO. BL1 #4 BARS	NO. BL2 #3 BARS
3	3	8"	8"	8"	2	2'- 0"	2	2'- 0"	1	1'- 0"	4	6"	4'- 0"	2'- 8"	8'-10"	6	10"	4'- 0"	4	10"	2'- 1¼"	3'-11"	4	12"	4'- 0"	16	8
3	4	8"	8"	8"	2	2'- 0"	2	2'- 0"	2	2'- 0"	4	6"	4'- 0"	3'- 2"	9'-10"	6	10"	4'- 0"	4	10"	2'- 1¼"	3'-11"	4	12"	5'- 0"	16	12
4	3	10¼"	10¼"	8"	3	3'- 0"	3	3'- 0"	1	1'- 0"	5	8½"	5'- 0"	2'-10¼"	10'- 2"	6	8"	5'- 0"	--	---	-----	-----	4	12"	4'- 5"	20	8
4	4	10¼"	10¼"	8"	3	3'- 0"	3	3'- 0"	2	2'- 0"	4	7"	5'- 0"	3'- 4"	11'- 2"	6	7½"	5'- 0"	--	---	-----	-----	4	12"	5'- 4"	20	12
4	5	10¼"	10¼"	8"	3	3'- 0"	3	3'- 0"	3	3'- 0"	4	8"	5'- 0"	3'-10¼"	12'- 2"	6	8"	5'- 0"	--	---	-----	-----	5	12"	6'- 5"	20	16
4	6	10¼"	10¼"	10"	3	3'- 0"	3	3'- 0"	4	4'- 0"	4	8"	5'- 0"	4'- 4¼"	13'- 2"	6	8"	5'- 0"	--	---	-----	-----	5	12"	7'- 5"	20	20
5	3	13"	13"	8"	4	4'- 0"	4	4'- 0"	1	1'- 0"	4	6½"	6'- 0"	3'- 1"	11'- 8"	6	6½"	6'- 0"	--	---	-----	-----	4	12"	4'-10"	24	8
5	4	13"	13"	8"	4	4'- 0"	4	4'- 0"	2	2'- 0"	4	6½"	6'- 0"	3'- 7"	12'- 8"	6	6½"	6'- 0"	--	---	-----	-----	4	12"	5'-10"	24	12
5	5	13"	13"	8"	4	4'- 0"	4	4'- 0"	3	3'- 0"	4	6½"	6'- 0"	4'- 1"	13'- 8"	6	6½"	6'- 0"	--	---	-----	-----	5	12"	6'-10"	24	16
5	6	12¼"	12¼"	8"	4	4'- 0"	4	4'- 0"	4	4'- 0"	4	6"	6'- 0"	4'- 6¼"	14'- 6"	6	6"	6'- 0"	--	---	-----	-----	5	10"	7'- 9"	24	20
5	7	12¼"	12¼"	10"	4	4'- 0"	4	4'- 0"	5	5'- 0"	4	6½"	6'- 0"	5'- ¼"	15'- 6"	6	6½"	6'- 0"	--	---	-----	-----	5	8"	8'- 9"	24	24
6	4	14½"	14½"	8"	5	5'- 0"	5	5'- 0"	2	2'- 0"	4	9"	7'- 0"	3'- 8½"	13'-11"	8	9"	7'- 0"	3	9"	2'- 8⅜"	5'- 2"	4	12"	6'- 1"	28	12
6	5	14½"	14½"	8"	5	5'- 0"	5	5'- 0"	3	3'- 0"	4	5"	7'- 0"	4'- 2½"	14'-11"	6	5"	7'- 0"	--	---	-----	-----	4	12"	7'- 1"	28	16
6	6	14¾"	14¾"	8¾"	5	5'- 0"	5	5'- 0"	4	4'- 0"	5	9"	7'- 0"	4'- 8¾"	15'-11"	8	9"	7'- 0"	3	9"	3'- 3"	6'- 4"	5	10"	8'- 1"	28	20
6	7	14¾"	14¾"	8"	5	5'- 0"	5	5'- 0"	5	5'- 0"	5	8½"	7'- 0"	5'- 2¾"	16'-10"	8	8½"	7'- 0"	3	8½"	3'- 6"	6'-10"	5	6"	9'- 1"	28	24
6	8	14½"	14½"	10"	5	5'- 0"	5	5'- 0"	6	6'- 0"	5	8½"	7'- 0"	5'- 8½"	17'- 9"	8	8½"	7'- 0"	3	8½"	3'- 8"	7'- 2"	5	6"	10'- 1"	28	28
7	4	17½"	17½"	8"	6	6'- 0"	6	6'- 0"	2	2'- 0"	5	8"	8'- 0"	3'-11½"	15'- 3"	8	8"	8'- 0"	--	---	-----	-----	4	12"	6'- 7"	32	12
7	6	17¾"	17¾"	8"	6	6'- 0"	6	6'- 0"	4	4'- 0"	5	8"	8'- 0"	4'-11¾"	17'- 5"	8	8"	8'- 0"	4	8"	2'-10¾"	5'- 6"	5	10"	8'- 7"	32	20
7	8	17½"	17½"	8¾"	6	6'- 0"	6	6'- 0"	6	6'- 0"	5	8"	8'- 0"	5'-11½"	19'- 3"	8	8"	8'- 0"	3	8"	3'-11"	7'- 7"	5	6"	10'- 7"	32	28
7	10	17½"	17½"	12"	6	6'- 0"	6	6'- 0"	8	8'- 0"	5	8"	8'- 0"	6'-11½"	21'- 3"	8	8"	8'- 0"	3	8"	4'- 4"	8'- 7"	7	9"	12'- 7"	32	36
8	4	18¼"	18¼"	8"	7	7'- 0"	7	7'- 0"	2	2'- 0"	5	5½"	9'- 0"	4'- ¼"	16'- 6"	7	5½"	9'- 0"	--	---	-----	-----	4	12"	6'- 9"	36	12
8	6	18½"	18½"	8"	7	7'- 0"	7	7'- 0"	4	4'- 0"	4	5½"	9'- 0"	5'- ½"	18'- 7"	7	5½"	9'- 0"	--	---	-----	-----	5	12"	8'- 9"	36	20
8	8	18¾"	18¾"	9"	7	7'- 0"	7	7'- 0"	6	6'- 0"	5	5½"	9'- 0"	6'- ¾"	20'- 6"	7	5½"	9'- 0"	--	---	-----	-----	5	5½"	10'- 9"	36	28
8	10	19"	19"	12"	7	7'- 0"	7	7'- 0"	8	8'- 0"	5	5½"	9'- 3½"	7'- 1"	22'-10"	7	5½"	9'- 3"	--	---	-----	-----	5	6"	12'-10"	36	36
9	4	20"	20"	8"	8	8'- 0"	8	8'- 0"	2	2'- 0"	5	6½"	10'- 0"	4'- 2"	17'- 8"	8	6½"	10'- 0"	--	---	-----	-----	4	12"	7'- 0"	40	12
9	6	20½"	20½"	8"	8	8'- 0"	8	8'- 0"	4	4'- 0"	5	6½"	10'- 0"	5'- 2½"	19'- 9"	8	6½"	10'- 0"	--	---	-----	-----	5	12"	9'- 1"	40	20
9	8	20¾"	20¾"	8½"	8	8'- 0"	8	8'- 0"	6	6'- 0"	5	6"	10'- 0"	6'- 2¾"	21'-10"	8	6"	10'- 0"	--	---	-----	-----	6	8"	11'- 1"	40	28
9	10	20¾"	20¾"	12"	8	8'- 0"	8	8'- 0"	8	8'- 0"	6	6½"	10'- 3½"	**7'- 6¼"**	24'- 7"	8	6½"	10'- 3"	--	---	-----	-----	5	6"	13'- 1"	40	36
9	12	21"	21"	14"	8	8'- 0"	8	8'- 0"	10	10'- 0"	6	5½"	10'- 6½"	8'- 6½"	26'-10"	8	5½"	10'- 6"	--	---	-----	-----	7	8"	15'- 2"	40	44
10	4	22½"	22½"	8"	9	9'- 0"	9	9'- 0"	2	2'- 0"	5	6"	11'- 0"	4'- 4½"	19'- 3"	8	6"	11'- 0"	--	---	-----	-----	4	12"	7'- 5"	44	12
10	6	22¼"	22¼"	8"	9	9'- 0"	9	9'- 0"	4	4'- 0"	5	6"	11'- 0"	5'- 4¼"	21'- 2"	8	6"	11'- 0"	--	---	-----	-----	5	12"	9'- 4"	44	20
10	8	22¼"	22¼"	8"	9	9'- 0"	9	9'- 0"	6	6'- 0"	5	6"	11'- 0"	6'- 4¼"	23'- 1"	8	6"	11'- 0"	--	---	-----	-----	5	5½"	11'- 4"	44	28
10	10	22"	22"	12"	9	9'- 0"	9	9'- 0"	8	8'- 0"	5	5½"	11'- 3½"	7'- 4"	25'- 4"	8	5½"	11'- 3"	--	---	-----	-----	5	5"	13'- 4"	44	36
10	12	22"	22"	14"	9	9'- 0"	9	9'- 0"	10	10'- 0"	7	5½"	11'- 6½"	8'-11"	28'- 5"	8	5½"	11'- 6"	--	---	-----	-----	6	6"	15'- 4"	44	44
12	6	27½"	27½"	8½"	11	11'- 0"	11	11'- 0"	4	4'- 0"	4	5"	13'- 1"	5'- 9½"	24'- 2"	8	5"	13'- 1"	--	---	-----	-----	5	12"	10'- 3"	52	20
12	8	27½"	27½"	8"	11	11'- 0"	11	11'- 0"	6	6'- 0"	5	5"	13'- 0"	6'-11½"	26'- 3"	8	5"	13'- 0"	--	---	-----	-----	6	7"	12'- 3"	52	28
12	10	27½"	27½"	12"	11	11'- 0"	11	11'- 0"	8	8'- 0"	5	4½"	13'- 3½"	7'-11½"	28'- 7"	8	4½"	13'- 3"	--	---	-----	-----	7	9½"	14'- 3"	52	36
12	12	27½"	27½"	14"	11	11'- 0"	11	11'- 0"	10	10'- 0"	6	4½"	13'- 6½"	9'- 1"	31'- 0"	8	4½"	13'- 6"	--	---	-----	-----	7	8"	16'- 3"	52	44

A COPY OF THE ORIGINAL SEALED AND SIGNED DRAWING IS ON FILE IN THE CENTRAL OFFICE.

VDOT
ROAD AND BRIDGE STANDARDS

SHEET 1 OF 2 | REVISION DATE
1002.15 | 07/11

SINGLE BOX CULVERTS

40 TO 50 FT. FILLS

VIRGINIA DEPARTMENT OF TRANSPORTATION

SPECIFICATION REFERENCE

FOR TYPICAL SECTION, NOTES AND OTHER DETAILS, REFER TO STANDARD BCS-DT.

SPAN (FT.)	HGHT (FT.)	REINFORCING STEEL (LBS/LONG. JT)	QUAN./LF CONCRETE CLASS A4 (CY/LF)	QUAN./LF REINFORCING STEEL (LBS/LF)	HEADWALLS G HEADWALL LENGTH	HEADWALLS HW I SIZE	HEADWALLS HW I LENGTH	INLET CONCRETE CL. A4 (CY)	INLET REINFORCING STEEL (LBS)	OUTLET CONCRETE CL. A4 (CY)	OUTLET REINFORCING STEEL (LBS)	WINGWALL
3	3	16.184	0.399	68.962	5'-10"	6	5'- 6"	1.038	33.044	1.042	33.044	A
3	4	17.596	0.448	74.625	5'-10"	6	5'- 6"	1.131	33.044	1.134	33.044	C
4	3	19.524	0.522	76.100	6'-10"	6	6'- 6"	1.165	39.052	1.172	39.052	B
4	4	20.936	0.571	75.683	6'-10"	6	6'- 6"	1.257	39.052	1.264	39.052	D
4	5	22.348	0.620	81.181	6'-10"	6	6'- 6"	1.350	39.052	1.357	39.052	F
4	6	23.760	0.764	86.910	6'-10"	6	6'- 6"	1.443	39.052	1.450	39.052	H
5	3	22.864	0.691	87.548	7'-10"	6	7'- 6"	1.259	45.060	1.269	45.060	B
5	4	24.276	0.740	92.854	7'-10"	6	7'- 6"	1.352	45.060	1.362	45.060	D
5	5	25.688	0.789	104.834	7'-10"	6	7'- 6"	1.444	45.060	1.455	45.060	F
5	6	27.100	0.808	119.650	7'-10"	6	7'- 6"	1.537	45.060	1.547	45.060	H
5	7	28.512	0.968	126.150	7'-10"	6	7'- 6"	1.630	45.060	1.640	45.060	J
6	4	27.616	0.887	116.334	8'-10"	6	8'- 6"	1.433	51.068	1.446	51.068	D
6	5	29.028	0.935	132.479	8'-10"	6	8'- 6"	1.525	51.068	1.539	51.068	F
6	6	30.440	1.038	155.252	8'-10"	6	8'- 6"	1.617	51.068	1.631	51.068	H
6	7	31.852	1.041	186.084	8'-10"	6	8'- 6"	1.710	51.068	1.724	51.068	J
6	8	33.264	1.207	195.354	8'-10"	6	8'- 6"	1.804	51.068	1.817	51.068	L
7	4	30.956	1.128	146.481	9'-10"	6	9'- 6"	1.514	57.076	1.531	57.076	E
7	6	33.780	1.236	194.910	9'-10"	6	9'- 6"	1.698	57.076	1.715	57.076	I
7	8	36.604	1.371	222.064	9'-10"	6	9'- 6"	1.885	57.076	1.902	57.076	M
7	10	39.428	1.735	257.787	9'-10"	6	9'- 6"	2.070	57.076	2.087	57.076	Q
8	4	34.296	1.276	195.772	10'-10"	6	10'- 6"	1.579	63.084	1.599	63.084	E
8	6	37.120	1.390	187.491	10'-10"	6	10'- 6"	1.762	63.084	1.782	63.084	I
8	8	39.944	1.566	261.160	10'-10"	6	10'- 6"	1.945	63.084	1.965	63.084	M
8	10	42.768	1.934	281.746	10'-10"	6	10'- 6"	1.987	63.084	2.006	63.084	Q
9	4	37.636	1.499	207.204	11'-10"	6	11'- 6"	1.627	69.092	1.650	69.092	E
9	6	40.460	1.628	231.090	11'-10"	6	11'- 6"	1.806	69.092	1.830	69.092	I
9	8	43.284	1.774	288.545	11'-10"	6	11'- 6"	1.988	69.092	2.012	69.092	M
9	10	46.108	2.166	334.834	11'-10"	6	11'- 6"	2.030	69.092	2.052	69.092	Q
9	12	48.932	2.515	436.543	11'-10"	6	11'- 6"	2.048	69.092	2.069	69.092	U
10	4	40.976	1.795	245.200	12'-10"	6	12'- 6"	1.671	75.100	1.698	75.100	F
10	6	43.800	1.874	266.040	12'-10"	6	12'- 6"	1.860	75.100	1.887	75.100	J
10	8	46.624	1.970	310.043	12'-10"	6	12'- 6"	2.046	75.100	2.073	75.100	N
10	10	49.448	2.385	361.147	12'-10"	6	12'- 6"	2.089	75.100	2.114	75.100	R
10	12	52.272	2.714	528.019	12'-10"	6	12'- 6"	2.109	75.100	2.133	75.100	V
12	6	50.480	2.610	314.113	14'-10"	6	14'- 6"	1.847	87.116	1.881	87.116	K
12	8	53.304	2.668	410.348	14'-10"	6	14'- 6"	2.065	87.116	2.099	87.116	O
12	10	56.128	3.123	476.112	14'-10"	6	14'- 6"	2.094	87.116	2.127	87.116	S
12	12	58.952	3.467	594.069	14'-10"	6	14'- 6"	2.106	87.116	2.137	87.116	W

A COPY OF THE ORIGINAL SEALED AND SIGNED DRAWING IS ON FILE IN THE CENTRAL OFFICE.

SPECIFICATION REFERENCE

SINGLE BOX CULVERTS

40 TO 50 FT. FILLS

VIRGINIA DEPARTMENT OF TRANSPORTATION

VDOT

ROAD AND BRIDGE STANDARDS

REVISION DATE 07/11

SHEET 2 OF 2

1002.16

BCD-DT

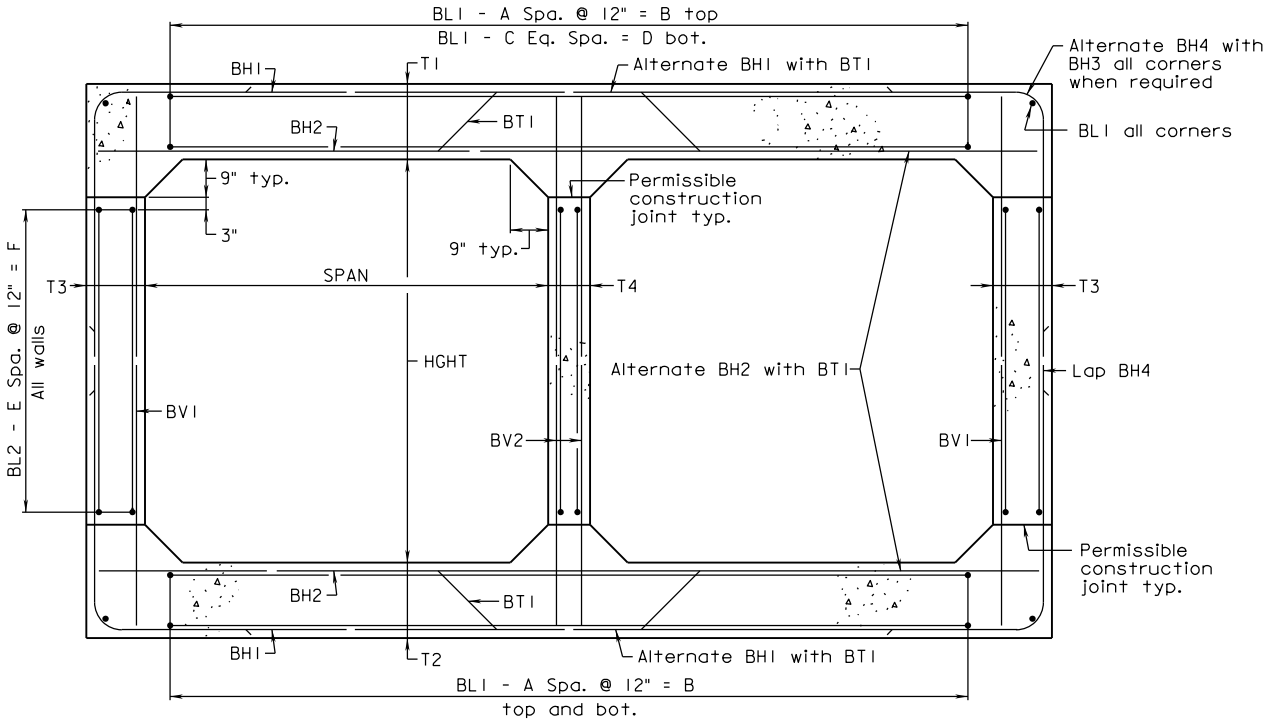

TYPICAL SECTION

A COPY OF THE ORIGINAL SEALED AND SIGNED DRAWING IS ON FILE IN THE CENTRAL OFFICE.

VDOT ROAD AND BRIDGE STANDARDS	DOUBLE BOX CULVERTS STANDARD DETAILS VIRGINIA DEPARTMENT OF TRANSPORTATION	SPECIFICATION REFERENCE
SHEET 1 OF 3 / REVISION DATE		
1003.01 / 07/11		

GENERAL NOTE

Capacity: AASHTO HI-93 Loading.

Specifications:

Construction - Va. Department of Transportation Road and Bridge Specifications.

Design - AASHTO LRFD Bridge Design Specifications, 5th Edition 2010; 2011 Interim Specifications; and VDOT Modifications.

All concrete shall be Class A4.

Deformed reinforcing bars shall conform to ASTM A615, Grade 60. All reinforcing bar dimensions on the detailed drawings are to centers of bars except where otherwise noted and are subject to fabrication and construction tolerances.

Construction joints shall be constructed and bonded in accordance with the current Road and Bridge Specifications.

Barrels more than 35' in length shall be poured in sections by providing vertical construction joints, not exceeding 25' between joints nor more than 30' from ends of barrels.

** All bends shall be made with a pin diameter as listed in TABLE A except for Bars BH3 and BH4 which shall have a pin diameter of 24 bar diameters.

Dimensions on bar diagrams are out-to-out of bars. Bars are straight and #4 size unless otherwise shown. BL2 shall be #3 size.

The number of BL1 and BL2 bars shown in the table is the number of longitudinal bars shown in the Typical Section and may not equal the total number of bars required. BL1 and BL2 shall have a lap of 30 bar diameters at splices. At construction joints, first placed bars shall project 30 bar diameters beyond the joint. Estimated QUAN./LF shown for reinforcing steel does not include quantity for laps of BL1 and BL2 bars. The additional weight per longitudinal lap is shown in the table.

The minimum cover of main reinforcing bars shall be 2½" from the face of the concrete for culverts under 0 to 2 foot fills and shall be 2" from the face of cencrete for all other culverts.

All reinforcing steel for culverts under 0 to 2 foot fills shall be Low Carbon/Chromium Reinforcing Steel conforming to ASTM A1035.

At the Contractor's option, BV1 and BV2 bars may be spliced at the permissible construction joint in order to facilitate construction. No additional compensation shall be provided for the increase in reinforcing steel quantity due to the splices.

Bar HW2 shall be 4" less than culvert height in length.

Headwall quantities shown assume wingwalls are to be built at a 45° angle to the headwall.

The designs are applicable to the fill height and other conditions indicated. Any change in the conditions invalidates these designs.

Wingwalls referenced by letter apply when the acceptable foundation level is the same for both box and wings. If foundation levels are different, the height of the wingwall shall be adjusted by selection of another lettered wingwall of appropriate height. For wingwall details, refer to standard series BCW for the appropriate fill slope.

For details of extending existing boxes, refer to Standard BCE-01.

For modification of details for skewed culverts, see the skewed box details included in the road plans.

This standard shall be used with the BCD standard series.

A COPY OF THE ORIGINAL SEALED AND SIGNED DRAWING IS ON FILE IN THE CENTRAL OFFICE.

SPECIFICATION REFERENCE	DOUBLE BOX CULVERTS STANDARD DETAILS VIRGINIA DEPARTMENT OF TRANSPORTATION	VDOT ROAD AND BRIDGE STANDARDS	
		REVISION DATE	SHEET 2 OF 3
		07/12	1003.02

BCD-DT

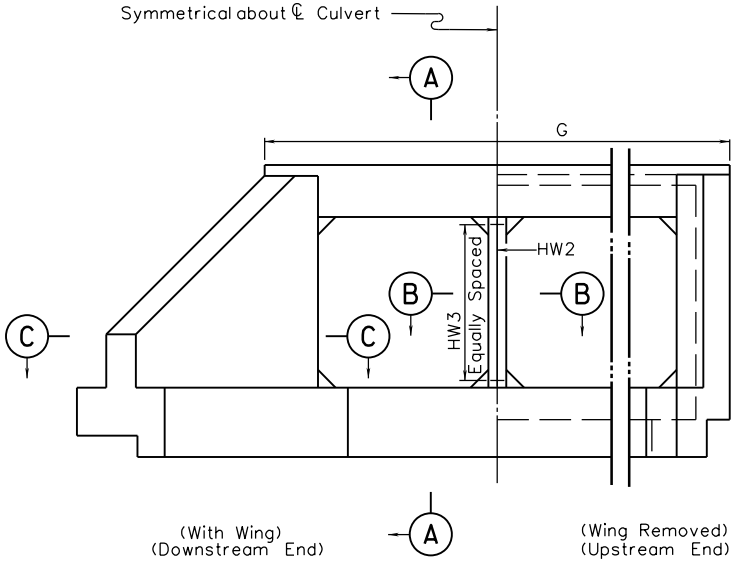

END ELEVATION

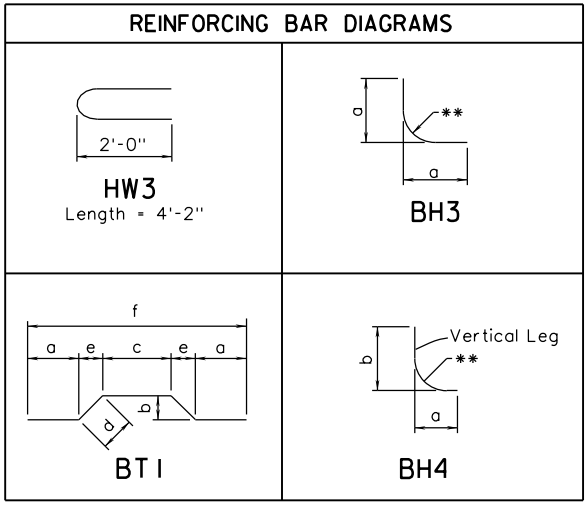

TABLE A	
Bar Size	Pin Dia.
*3	2¼"
*4	3"
*5	3¾"
*6	4½"
*7	5¼"
*8	6"
*9	9"

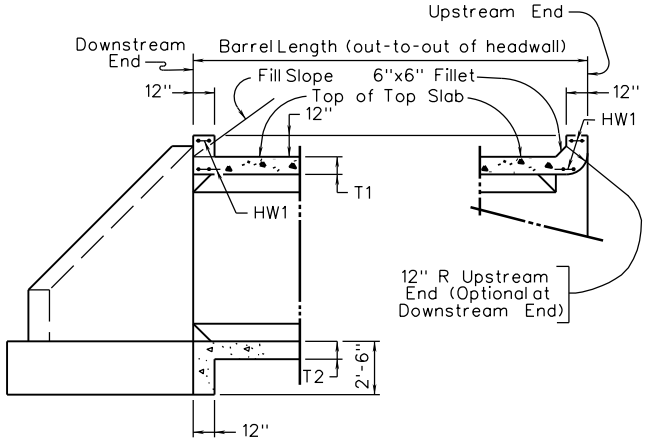

SECTION A-A
(With Wing)

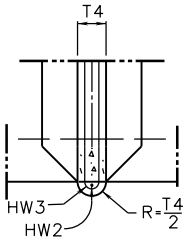

PART SECTION B-B
UPSTREAM END
(Optional at Downstream End)

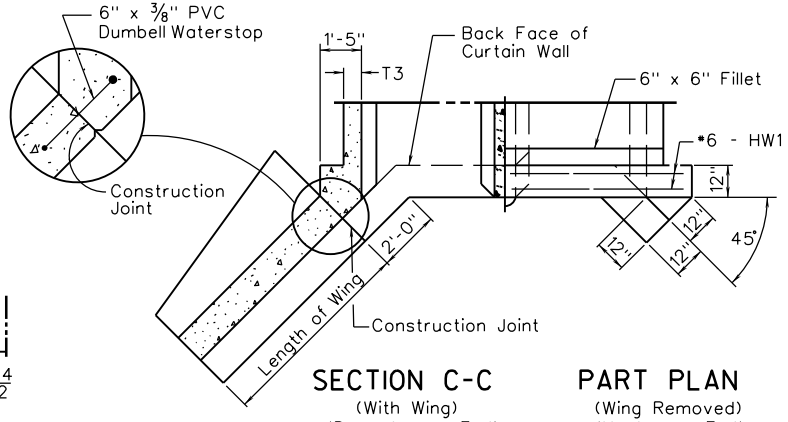

SECTION C-C
(With Wing)
(Downstream End)

PART PLAN
(Wing Removed)
(Upstream End)

VDOT
ROAD AND BRIDGE STANDARDS

SHEET 3 OF 3
1003.03

REVISION DATE
07/11

DOUBLE BOX CULVERTS

STANDARD DETAILS

VIRGINIA DEPARTMENT OF TRANSPORTATION

SPECIFICATION REFERENCE

BCD-DT

THIS PAGE INTENTIONALLY LEFT BLANK

SPECIFICATION REFERENCE	DOUBLE BOX CULVERTS STANDARD DETAILS VIRGINIA DEPARTMENT OF TRANSPORTATION	VDOT ROAD AND BRIDGE STANDARDS	
		REVISION DATE 07/11	SHEET 1 OF 1 1003.04

BCD-02

FOR TYPICAL SECTION, NOTES AND OTHER DETAILS, REFER TO STANDARD BCD-DT.

DIMENSIONS						REINFORCING STEEL																										
SPAN	HGHT	T1	T2	T3	T4							BH1			BH2			BH3				BH4					BV1			BV2		
(FT.)	(FT.)	TOP SLAB	BOTTOM SLAB	EXTERIOR WALL (IN.)	INTERIOR WALL (IN.)	A	B	C	D	E	F	SIZE	SPACING C-C	LENGTH	SIZE	SPACING C-C	LENGTH	SIZE	SPACING C-C	a	LENGTH	SIZE	SPACING C-C	a	b	LENGTH	SIZE	SPACING C-C	LENGTH	SIZE	SPACING C-C	LENGTH
3	3	8"	8"	8"	8"	6	6'- 0"	12	6'- 0"	1	1'- 0"	4	12"	7'- 6"	4	12"	7'- 8"	--	---	-----	-----	4	12"	2'- 1¼"	2'- 8"	4'- 6"	4	12"	4'- 0"	4	12"	4'- 0"
3	4	8¼"	8¼"	8"	8"	6	6'- 0"	12	6'- 0"	2	2'- 0"	4	12"	7'- 6"	4	12"	7'- 8"	--	---	-----	-----	4	12"	2'- 1¼"	3'- 2¼"	5'- 0"	4	12"	5'- 0"	4	12"	5'- 0"
4	3	8¼"	8¼"	8"	8"	8	8'- 0"	16	8'- 0"	1	1'- 0"	4	12"	9'- 1"	4	12"	9'- 8"	--	---	-----	-----	4	12"	2'- 3⅝"	2'- 8¼"	4'- 9"	4	10½"	4'- 0"	4	12"	4'- 0"
4	4	8½"	8½"	8"	8"	8	8'- 0"	16	8'- 0"	2	2'- 0"	4	12"	9'- 1"	4	12"	9'- 8"	--	---	-----	-----	4	12"	2'- 3⅝"	3'- 2½"	5'- 3"	4	12"	5'- 1"	4	12"	5'- 1"
4	5	8½"	8½"	8"	8"	8	8'- 0"	16	8'- 0"	3	3'- 0"	4	12"	9'- 1"	4	12"	9'- 8"	--	---	-----	-----	4	12"	2'- 3⅝"	3'- 8½"	5'- 9"	4	12"	6'- 1"	4	12"	6'- 1"
4	6	8½"	8½"	8"	8"	8	8'- 0"	16	8'- 0"	4	4'- 0"	4	12"	9'- 1"	4	12"	9'- 8"	--	---	-----	-----	4	12"	2'- 3⅝"	4'- 2½"	6'- 3"	4	12"	7'- 1"	4	12"	7'- 1"
5	3	8½"	8½"	8"	8"	10	10'- 0"	20	10'- 0"	1	1'- 0"	4	12"	10'- 8"	4	12"	11'- 8"	--	---	-----	-----	4	12"	2'- 6"	2'- 8½"	4'-11"	4	12"	4'- 1"	4	12"	4'- 1"
5	4	8½"	8½"	8"	8"	10	10'- 0"	20	10'- 0"	2	2'- 0"	4	11"	10'- 8"	4	11"	11'- 8"	--	---	-----	-----	4	11"	2'- 6"	3'- 2½"	5'- 5"	4	12"	5'- 1"	4	12"	5'- 1"
5	5	8½"	8½"	8"	8"	10	10'- 0"	20	10'- 0"	3	3'- 0"	4	11"	10'- 8"	4	11"	11'- 8"	--	---	-----	-----	4	11"	2'- 6"	3'- 8½"	5'-11"	4	12"	6'- 1"	4	12"	6'- 1"
5	6	8½"	8½"	8"	8"	10	10'- 0"	20	10'- 0"	4	4'- 0"	4	11"	10'- 8"	4	11"	11'- 8"	--	---	-----	-----	4	11"	2'- 6"	4'- 2½"	6'- 5"	4	12"	7'- 1"	4	12"	7'- 1"
5	7	8¾"	8¾"	8"	8"	10	10'- 0"	20	10'- 0"	5	5'- 0"	4	11"	10'- 8"	4	11"	11'- 8"	--	---	-----	-----	4	11"	2'- 6"	4'- 8¾"	7'- 0"	4	12"	8'- 2"	4	12"	8'- 2"
6	4	8½"	8½"	8"	8"	12	12'- 0"	24	12'- 0"	2	2'- 0"	4	10"	12'- 7"	4	10"	13'- 8"	--	---	-----	-----	4	10"	2'- 8⅜"	3'- 2½"	5'- 8"	4	12"	5'- 1"	4	12"	5'- 1"
6	5	8¾"	8¾"	8"	8"	12	12'- 0"	24	12'- 0"	3	3'- 0"	4	10"	12'- 7"	4	10"	13'- 8"	--	---	-----	-----	4	10"	2'- 8⅜"	3'- 8¾"	6'- 2"	4	12"	6'- 2"	4	12"	6'- 2"
6	6	8¾"	8¾"	8"	8"	12	12'- 0"	24	12'- 0"	4	4'- 0"	4	9"	12'- 7"	4	9"	13'- 8"	--	---	-----	-----	4	9"	2'- 8⅜"	4'- 2¾"	6'- 8"	4	12"	7'- 2"	4	12"	7'- 2"
6	7	8¾"	8¾"	8"	8"	12	12'- 0"	24	12'- 0"	5	5'- 0"	4	9"	12'- 7"	4	9"	13'- 8"	--	---	-----	-----	4	9"	2'- 8⅜"	4'- 8¾"	7'- 2"	4	12"	8'- 2"	4	12"	8'- 2"
6	8	8¾"	8¾"	8"	8"	12	12'- 0"	24	12'- 0"	6	6'- 0"	4	9"	12'- 7"	4	9"	13'- 8"	--	---	-----	-----	4	9"	2'- 8⅜"	5'- 2¾"	7'- 8"	4	12"	9'- 2"	4	12"	9'- 2"
7	4	8¾"	8¾"	8"	8"	14	14'- 0"	28	14'- 0"	2	2'- 0"	4	9"	14'- 7"	4	9"	15'- 8"	4	9"	2'-10¾"	5'- 6"	4	9"	2'-10¾"	3'- 2¾"	5'-10"	4	12"	5'- 2"	4	11"	5'- 2"
7	6	8¾"	8¾"	8"	8"	14	14'- 0"	28	14'- 0"	4	4'- 0"	4	8"	14'- 7"	4	8"	15'- 8"	4	8"	2'-10¾"	5'- 6"	4	8"	2'-10¾"	4'- 2¾"	6'-10"	4	12"	7'- 2"	4	11½"	7'- 2"
7	8	8¾"	8¾"	8"	8"	14	14'- 0"	28	14'- 0"	6	6'- 0"	4	8"	14'- 7"	4	8"	15'- 8"	4	8"	3'- 2"	6'- 0"	4	8"	2'-10¾"	5'- 2¾"	7'-10"	4	12"	9'- 2"	4	12"	9'- 2"
7	10	9"	9"	8"	8"	14	14'- 0"	28	14'- 0"	8	8'- 0"	5	12"	14'- 7"	5	12"	15'- 8"	4	12"	3'- 7"	6'-10"	5	12"	2'-10¾"	6'- 3"	8'-10"	4	12"	11'- 2"	4	12"	11'- 2"
8	4	8¾"	8¾"	8"	8"	16	16'- 0"	32	16'- 0"	2	2'- 0"	5	11"	16'- 4"	5	11"	17'- 8"	4	11"	3'- 1¼"	5'-11"	5	11"	3'- 1¼"	3'- 2¾"	6'- 0"	4	12"	5'- 2"	4	10"	5'- 2"
8	6	8¾"	8¾"	8"	8"	16	16'- 0"	32	16'- 0"	4	4'- 0"	5	11"	16'- 4"	5	11"	17'- 8"	4	11"	3'- 1¼"	5'-11"	5	11"	3'- 1¼"	4'- 2¾"	7'- 0"	4	12"	7'- 2"	4	10"	7'- 2"
8	8	9"	9"	8"	8"	16	16'- 0"	32	16'- 0"	6	6'- 0"	5	11"	16'- 4"	5	11"	17'- 8"	4	11"	3'- 1¼"	5'-11"	5	11"	3'- 1¼"	5'- 3"	8'- 0"	4	12"	9'- 2"	4	10½"	9'- 2"
8	10	9"	9"	8"	8"	16	16'- 0"	32	16'- 0"	8	8'- 0"	5	10"	16'- 4"	5	10"	17'- 8"	4	10"	3'- 7"	6'-10"	5	10"	3'- 1¼"	6'- 3"	9'- 0"	4	12"	11'- 2"	4	11"	11'- 2"
9	4	8¾"	8¾"	8"	8"	18	18'- 0"	36	18'- 0"	2	2'- 0"	5	10"	18'- 4"	5	10"	19'- 8"	4	10"	3'- 3⅝"	6'- 4"	5	10"	3'- 3⅝"	3'- 2¾"	6'- 2"	4	12"	5'- 2"	4	9"	5'- 2"
9	6	8¾"	8¾"	8"	8"	18	18'- 0"	36	18'- 0"	4	4'- 0"	5	9"	18'- 4"	5	9"	19'- 8"	4	9"	3'- 3⅝"	6'- 4"	5	9"	3'- 3⅝"	4'- 2¾"	7'- 2"	4	12"	7'- 2"	4	9½"	7'- 2"
9	8	9½"	9½"	8"	8"	18	18'- 0"	36	18'- 0"	6	6'- 0"	5	10"	18'- 4"	5	10"	19'- 8"	4	10"	3'- 3⅝"	6'- 4"	5	10"	3'- 3⅝"	5'- 3½"	8'- 3"	4	12"	9'- 3"	4	10"	9'- 3"
9	10	9¾"	9¾"	8"	8"	18	18'- 0"	36	18'- 0"	8	8'- 0"	5	9"	18'- 4"	5	9"	19'- 8"	4	9"	3'- 8"	6'-11"	5	9"	3'- 3⅝"	6'- 3¾"	9'- 3"	4	12"	11'- 3"	4	10½"	11'- 3"
9	12	9¾"	9¾"	8"	8"	18	18'- 0"	36	18'- 0"	10	10'- 0"	6	12"	18'- 4"	6	12"	19'- 8"	5	12"	4'- 1"	7'-11"	6	12"	3'-10"	7'- 7¼"	11'- 1"	5	12"	13'- 3"	4	11½"	13'- 3"
10	4	9½"	9½"	8"	8"	20	20'- 0"	40	20'- 0"	2	2'- 0"	5	9"	20'- 4"	5	9"	21'- 8"	4	9"	3'- 6"	6'- 9"	5	9"	3'- 6"	3'- 3½"	6'- 6"	4	12"	5'- 3"	4	8½"	5'- 3"
10	6	9½"	9½"	8"	8"	20	20'- 0"	40	20'- 0"	4	4'- 0"	5	9"	20'- 4"	5	9"	21'- 8"	4	9"	3'- 6"	6'- 9"	5	9"	3'- 6"	4'- 3½"	7'- 6"	4	12"	7'- 3"	4	9"	7'- 3"
10	8	9¾"	9¾"	8"	8"	20	20'- 0"	40	20'- 0"	6	6'- 0"	6	12"	20'- 4"	6	12"	21'- 8"	5	12"	3'- 6"	6'- 8"	6	12"	4'- 0"	5'- 7¼"	9'- 3"	4	12"	9'- 3"	4	10"	9'- 3"
10	10	9¾"	9¾"	8"	8"	20	20'- 0"	40	20'- 0"	8	8'- 0"	5	8"	20'- 4"	5	8"	21'- 8"	4	8"	3'- 6"	6'- 9"	5	8"	3'- 6"	6'- 3¾"	9'- 6"	4	12"	11'- 3"	4	10"	11'- 3"
10	12	10"	10"	8"	8"	20	20'- 0"	40	20'- 0"	10	10'- 0"	5	8"	20'- 4"	5	8"	21'- 8"	4	8"	4'- 1"	7'-11"	5	8"	3'- 6"	7'- 4"	10'- 6"	5	12"	13'- 4"	4	10"	13'- 4"
12	6	10½"	10½"	8"	8"	24	24'- 0"	48	24'- 0"	4	4'- 0"	6	12"	24'- 4"	6	12"	25'- 8"	5	12"	3'-10¾"	7'- 6"	6	12"	4'- 5"	4'- 8"	8'- 8"	4	12"	7'- 5"	4	8"	7'- 5"
12	8	10¾"	10¾"	8"	8"	24	24'- 0"	48	24'- 0"	6	6'- 0"	5	8"	24'- 4"	5	8"	25'- 8"	4	8"	3'-10¾"	7'- 6"	5	8"	3'-10¾"	5'- 4¾"	9'- 0"	4	12"	9'- 5"	4	9"	9'- 5"
12	10	10¾"	10¾"	8"	8"	24	24'- 0"	48	24'- 0"	8	8'- 0"	6	10"	24'- 4"	6	10"	25'- 8"	5	10"	3'-10¾"	7'- 6"	6	10"	4'- 5"	6'- 8¼"	10'- 9"	4	12"	11'- 5"	4	10"	11'- 5"
12	12	11"	11"	8"	8"	24	24'- 0"	48	24'- 0"	10	10'- 0"	6	9"	24'- 4"	5	9"	25'- 8"	5	9"	4'- 2"	8'- 0"	5	9"	3'-10¾"	7'- 5"	11'- 0"	5	12"	13'- 6"	4	10"	13'- 6"

A COPY OF THE ORIGINAL SEALED AND SIGNED DRAWING IS ON FILE IN THE CENTRAL OFFICE.

VDOT
ROAD AND BRIDGE STANDARDS

SHEET 1 OF 2 | REVISION DATE
1003.05 | 07/11

DOUBLE BOX CULVERTS

0 TO 2 FT. FILLS

VIRGINIA DEPARTMENT OF TRANSPORTATION

SPECIFICATION REFERENCE

BCD-02

FOR TYPICAL SECTION, NOTES AND OTHER DETAILS, REFER TO STANDARD BCD-DT.

SPAN (FT.)	HGHT (FT.)	REINFORCING STEEL BT1 SIZE	SPACING c-c	a	b	c	d	e	f	g	LENGTH	NO. BL1 #4 BARS	NO. BL2 #3 BARS	REINFORCING STEEL (LBS/LONG. JT)	QUAN./LF CONCRETE CLASS A4 (CY/LF)	REINFORCING STEEL (LBS/LF)	HEADWALLS G HEADWALL LENGTH	HW1 SIZE	HW1 LENGTH	NO. HW2 BARS	NO. HW3 BARS	INLET CONCRETE CL. A4 (CY)	INLET REINFORCING STEEL (LBS)	OUTLET CONCRETE CL. A4 (CY)	OUTLET REINFORCING STEEL (LBS)	WINGWALL
3	3	4	12"	2'- 8 7/8"	0'- 4 1/2"	1'- 6 5/8"	0'- 5 7/8"	0'- 3 3/4"	7'- 7 7/8"	-----	7'-11"	38	12	35.966	0.694	83.447	9'- 6"	6	9'- 2"	1	4	1.433	67.988	1.425	55.073	A
3	4	4	12"	2'- 8 3/4"	0'- 4 3/4"	1'- 6 3/8"	0'- 6 1/4"	0'- 4"	7'- 7 7/8"	-----	7'-11"	38	18	38.084	0.780	89.711	9'- 6"	6	9'- 2"	1	5	1.530	71.439	1.516	55.073	C
4	3	4	12"	3'- 6 3/8"	0'- 4 3/4"	1'-11 1/4"	0'- 6 1/4"	0'- 4"	9'- 8"	-----	9'-11"	48	12	44.316	0.807	99.018	11'- 6"	6	11'- 2"	1	4	1.632	80.004	1.631	67.089	A
4	4	4	12"	3'- 6 1/4"	0'- 5"	1'-11"	0'- 6 1/2"	0'- 4 1/4"	9'- 8"	-----	9'-11"	48	18	46.434	0.896	104.741	11'- 6"	6	11'- 2"	1	5	1.728	83.455	1.721	67.089	C
4	5	4	12"	3'- 6 1/4"	0'- 5"	1'-11"	0'- 6 1/2"	0'- 4 1/4"	9'- 8"	-----	9'-11"	48	24	48.552	0.970	111.005	11'- 6"	6	11'- 2"	1	6	1.827	86.907	1.813	67.089	E
4	6	4	12"	3'- 6 1/4"	0'- 5"	1'-11"	0'- 6 1/2"	0'- 4 1/4"	9'- 8"	-----	9'-11"	48	30	50.670	1.044	117.269	11'- 6"	6	11'- 2"	1	7	1.926	90.358	1.906	67.089	G
5	3	4	12"	4'- 3 7/8"	0'- 5"	2'- 3 3/4"	0'- 6 1/2"	0'- 4 1/4"	11'- 8"	-----	11'-11"	58	12	52.666	0.927	113.062	13'- 6"	6	13'- 2"	1	4	1.828	92.020	1.834	79.105	A
5	4	4	11"	4'- 3 7/8"	0'- 5"	2'- 3 3/4"	0'- 6 1/2"	0'- 4 1/4"	11'- 8"	-----	11'-11"	58	18	54.784	1.000	124.802	13'- 6"	6	13'- 2"	1	5	1.927	95.471	1.927	79.105	C
5	5	4	11"	4'- 3 7/8"	0'- 5"	2'- 3 3/4"	0'- 6 1/2"	0'- 4 1/4"	11'- 8"	-----	11'-11"	58	24	56.902	1.073	131.187	13'- 6"	6	13'- 2"	1	6	2.026	98.923	2.019	79.105	E
5	6	4	11"	4'- 3 7/8"	0'- 5"	2'- 3 3/4"	0'- 6 1/2"	0'- 4 1/4"	11'- 8"	-----	11'-11"	58	30	59.020	1.147	137.572	13'- 6"	6	13'- 2"	1	7	2.125	102.374	2.112	79.105	G
5	7	4	11"	4'- 3 3/4"	0'- 5 1/4"	2'- 3 1/2"	0'- 6 7/8"	0'- 4 1/2"	11'- 8"	-----	12'- 0"	58	36	61.138	1.239	144.545	13'- 6"	6	13'- 2"	1	8	2.220	105.825	2.200	79.105	I
6	4	4	10"	5'- 1 1/2"	0'- 5"	2'- 8 1/2"	0'- 6 1/2"	0'- 4 1/4"	13'- 8"	-----	13'-11"	68	18	63.134	1.103	152.761	15'- 6"	6	15'- 2"	1	5	2.127	107.487	2.133	91.121	C
6	5	4	10"	5'- 1 3/8"	0'- 5 1/4"	2'- 8 1/4"	0'- 6 7/8"	0'- 4 1/2"	13'- 8"	-----	14'- 0"	68	24	65.252	1.198	159.848	15'- 6"	6	15'- 2"	1	6	2.220	110.939	2.219	91.121	E
6	6	4	9"	5'- 1 3/8"	0'- 5 1/4"	2'- 8 1/4"	0'- 6 7/8"	0'- 4 1/2"	13'- 8"	-----	14'- 0"	68	30	67.370	1.271	178.326	15'- 6"	6	15'- 2"	1	7	2.319	114.390	2.312	91.121	G
6	7	4	9"	5'- 1 3/8"	0'- 5 1/4"	2'- 8 1/4"	0'- 6 7/8"	0'- 4 1/2"	13'- 8"	-----	14'- 0"	68	36	69.488	1.344	184.438	15'- 6"	6	15'- 2"	1	8	2.417	117.841	2.405	91.121	I
6	8	4	9"	5'- 1 3/8"	0'- 5 1/4"	2'- 8 1/4"	0'- 6 7/8"	0'- 4 1/2"	13'- 8"	-----	14'- 0"	68	42	71.606	1.418	191.367	15'- 6"	6	15'- 2"	1	9	2.516	121.293	2.498	91.121	K
7	4	4	9"	5'-11"	0'- 5 1/4"	3'- 1 1/8"	0'- 6 7/8"	0'- 4 1/2"	15'- 8 1/8"	-----	16'- 0"	78	18	71.484	1.229	203.219	17'- 6"	6	17'- 2"	1	5	2.318	119.503	2.331	103.137	C
7	6	4	8"	5'-11"	0'- 5 1/4"	3'- 1 1/8"	0'- 6 7/8"	0'- 4 1/2"	15'- 8 1/8"	-----	16'- 0"	78	30	75.720	1.375	231.339	17'- 6"	6	17'- 2"	1	7	2.516	126.406	2.516	103.137	G
7	8	4	8"	5'-11"	0'- 5 1/4"	3'- 1 1/8"	0'- 6 7/8"	0'- 4 1/2"	15'- 8 1/8"	-----	16'- 0"	78	42	79.956	1.521	247.159	17'- 6"	6	17'- 2"	1	9	2.714	133.309	2.702	103.137	K
7	10	5	12"	5'-10 7/8"	0'- 5 5/8"	3'- 7/8"	0'- 7 3/8"	0'- 4 3/4"	15'- 8 1/8"	-----	16'- 0"	78	54	84.192	1.693	259.878	17'- 6"	6	17'- 2"	1	11	2.904	140.211	2.880	103.137	O
8	4	5	11"	6'- 8 1/2"	0'- 5 3/8"	3'- 5 7/8"	0'- 7"	0'- 4 1/2"	17'- 7 7/8"	-----	17'-11"	88	18	79.834	1.333	249.914	19'- 6"	6	19'- 2"	1	5	2.516	131.519	2.535	115.153	C
8	6	5	11"	6'- 8 1/2"	0'- 5 3/8"	3'- 5 7/8"	0'- 7"	0'- 4 1/2"	17'- 7 7/8"	-----	17'-11"	88	30	84.070	1.480	265.269	19'- 6"	6	19'- 2"	1	7	2.714	138.422	2.721	115.153	G
8	8	5	11"	6'- 8 3/8"	0'- 5 5/8"	3'- 5 5/8"	0'- 7 3/8"	0'- 4 3/4"	17'- 7 7/8"	-----	18'- 0"	88	42	88.306	1.655	280.192	19'- 6"	6	19'- 2"	1	9	2.903	145.325	2.897	115.153	K
8	10	5	10"	6'- 8 3/8"	0'- 5 5/8"	3'- 5 5/8"	0'- 7 3/8"	0'- 4 3/4"	17'- 7 7/8"	-----	18'- 0"	88	54	92.542	1.800	313.547	19'- 6"	6	19'- 2"	1	11	3.101	152.227	3.083	115.153	O
9	4	5	10"	7'- 6 1/8"	0'- 5 3/8"	3'-10 3/4"	0'- 7"	0'- 4 1/2"	19'- 8"	-----	20'- 0"	98	18	88.184	1.438	290.162	21'- 6"	6	21'- 2"	1	5	2.714	143.535	2.740	127.169	C
9	6	5	9"	7'- 6 1/8"	0'- 5 3/8"	3'-10 3/4"	0'- 7"	0'- 4 1/2"	19'- 8"	-----	20'- 0"	98	30	92.420	1.584	322.802	21'- 6"	6	21'- 2"	1	7	2.912	150.438	2.925	127.169	G
9	8	5	10"	7'- 5 3/4"	0'- 6 1/8"	3'-10"	0'- 8 1/8"	0'- 5 1/4"	19'- 8"	-----	20'- 0"	98	42	96.656	1.825	321.303	21'- 6"	6	21'- 2"	1	9	3.096	157.341	3.097	127.169	L
9	10	5	9"	7'- 5 5/8"	0'- 6 3/8"	3'- 9 3/4"	0'- 8 3/8"	0'- 5 1/2"	19'- 8"	-----	20'- 0"	98	54	100.892	2.000	361.853	21'- 6"	6	21'- 2"	1	11	3.284	164.243	3.272	127.169	P
9	12	6	12"	7'- 5 5/8"	0'- 6 1/2"	3'- 9 3/4"	0'- 8 1/2"	0'- 5 1/2"	19'- 8"	-----	20'- 0"	98	66	105.128	2.145	409.925	21'- 6"	6	21'- 2"	1	13	3.482	171.146	3.458	127.169	T
10	4	5	9"	8'- 3 3/8"	0'- 6 1/8"	4'- 2 3/4"	0'- 8 1/8"	0'- 5 1/4"	21'- 8"	-----	22'- 0"	108	18	96.534	1.645	333.154	23'- 6"	6	23'- 2"	1	5	2.894	155.551	2.926	139.185	D
10	6	5	9"	8'- 3 3/8"	0'- 6 1/8"	4'- 2 3/4"	0'- 8 1/8"	0'- 5 1/4"	21'- 8"	-----	22'- 0"	108	30	100.770	1.791	356.023	23'- 6"	6	23'- 2"	1	7	3.092	162.454	3.112	139.185	H
10	8	6	12"	8'- 3 1/4"	0'- 6 1/2"	4'- 2 1/2"	0'- 8 1/2"	0'- 5 1/2"	21'- 8"	-----	22'- 0"	108	42	105.006	1.970	395.204	23'- 6"	6	23'- 2"	1	9	3.277	169.357	3.285	139.185	L
10	10	5	8"	8'- 3 1/4"	0'- 6 3/8"	4'- 2 1/2"	0'- 8 3/8"	0'- 5 1/2"	21'- 8"	-----	22'- 0"	108	54	109.242	2.116	423.807	23'- 6"	6	23'- 2"	1	11	3.475	176.259	3.471	139.185	P
10	12	5	8"	8'- 3 1/8"	0'- 6 5/8"	4'- 2 1/4"	0'- 8 3/4"	0'- 5 3/4"	21'- 8"	-----	22'- 1"	108	66	113.478	2.296	454.858	23'- 6"	6	23'- 2"	1	13	3.661	183.162	3.644	139.185	T
12	6	6	12"	9'-10 1/8"	0'- 7 1/4"	4'-11 3/8"	0'- 9 5/8"	0'- 6 1/4"	25'- 8 1/8"	-----	26'- 1"	128	30	117.470	2.181	423.583	27'- 6"	6	27'- 2"	1	7	3.417	186.486	3.450	163.217	H
12	8	5	8"	9'-10"	0'- 7 3/8"	4'-11 1/8"	0'- 9 7/8"	0'- 6 1/2"	25'- 8 1/8"	-----	26'- 1"	128	42	121.706	2.366	468.309	27'- 6"	6	27'- 2"	1	9	3.600	193.389	3.621	163.217	L
12	10	6	10"	9'-10"	0'- 7 1/2"	4'-11 1/8"	0'- 9 7/8"	0'- 6 1/2"	25'- 8 1/8"	-----	26'- 1"	128	54	125.942	2.509	535.040	27'- 6"	6	27'- 2"	1	11	3.798	200.291	3.806	163.217	P
12	12	6	9"	9'- 9 7/8"	0'- 7 3/4"	4'-10 7/8"	0'-10 1/4"	0'- 6 3/4"	25'- 8 1/8"	-----	26'- 1"	128	66	130.178	2.696	546.448	27'- 6"	6	27'- 2"	1	13	3.980	207.194	3.976	163.217	T

A COPY OF THE ORIGINAL SEALED AND SIGNED DRAWING IS ON FILE IN THE CENTRAL OFFICE.

SPECIFICATION REFERENCE

DOUBLE BOX CULVERTS

0 TO 2 FT. FILLS

VIRGINIA DEPARTMENT OF TRANSPORTATION

VDOT

ROAD AND BRIDGE STANDARDS

REVISION DATE 01/15

SHEET 2 OF 2

1003.06

BCD-05

FOR TYPICAL SECTION, NOTES AND OTHER DETAILS, REFER TO STANDARD BCD-DT.

DIMENSIONS						REINFORCING STEEL																										
SPAN	HGHT	T1	T2	T3	T4							BH1			BH2			BH3				BH4					BV1			BV2		
(FT.)	(FT.)	TOP SLAB	BOTTOM SLAB	EXTERIOR WALL (IN.)	INTERIOR WALL (IN.)	A	B	C	D	E	F	SIZE	SPACING C-C	LENGTH	SIZE	SPACING C-C	LENGTH	SIZE	SPACING C-C	a	LENGTH	SIZE	SPACING C-C	a	b	LENGTH	SIZE	SPACING C-C	LENGTH	SIZE	SPACING C-C	LENGTH
3	3	8"	8"	8"	8"	6	6'- 0"	6	6'- 0"	1	1'- 0"	4	12"	7'- 6"	4	12"	7'- 8"	--	---	-----	-----	4	12"	2'- 1 1/4"	2'- 8"	4'- 6"	4	12"	4'- 0"	4	12"	4'- 0"
3	4	8"	8"	8"	8"	6	6'- 0"	6	6'- 0"	2	2'- 0"	4	12"	7'- 6"	4	12"	7'- 8"	--	---	-----	-----	4	12"	2'- 1 1/4"	3'- 2"	5'- 0"	4	12"	5'- 0"	4	12"	5'- 0"
4	3	8"	8"	8"	8"	8	8'- 0"	8	8'- 0"	1	1'- 0"	4	12"	9'- 1"	4	12"	9'- 8"	--	---	-----	-----	4	12"	2'- 3 5/8"	2'- 8"	4'- 8"	4	12"	4'- 0"	4	12"	4'- 0"
4	4	8"	8"	8"	8"	8	8'- 0"	8	8'- 0"	2	2'- 0"	4	12"	9'- 1"	4	12"	9'- 8"	--	---	-----	-----	4	12"	2'- 3 5/8"	3'- 2"	5'- 2"	4	12"	5'- 0"	4	12"	5'- 0"
4	5	8"	8"	8"	8"	8	8'- 0"	8	8'- 0"	3	3'- 0"	4	12"	9'- 1"	4	12"	9'- 8"	--	---	-----	-----	4	12"	2'- 3 5/8"	3'- 8"	5'- 8"	4	12"	6'- 0"	4	12"	6'- 0"
4	6	8"	8"	8"	8"	8	8'- 0"	8	8'- 0"	4	4'- 0"	4	12"	9'- 1"	4	12"	9'- 8"	--	---	-----	-----	4	12"	2'- 3 5/8"	4'- 2"	6'- 2"	4	12"	7'- 0"	4	12"	7'- 0"
5	3	8"	8"	8"	8"	10	10'- 0"	10	10'- 0"	1	1'- 0"	4	12"	10'- 8"	4	12"	11'- 8"	--	---	-----	-----	4	12"	2'- 6"	2'- 8"	4'-11"	4	12"	4'- 0"	4	12"	4'- 0"
5	4	8"	8"	8"	8"	10	10'- 0"	10	10'- 0"	2	2'- 0"	4	12"	10'- 8"	4	12"	11'- 8"	--	---	-----	-----	4	12"	2'- 6"	3'- 2"	5'- 5"	4	12"	5'- 0"	4	12"	5'- 0"
5	5	8"	8"	8"	8"	10	10'- 0"	10	10'- 0"	3	3'- 0"	4	12"	10'- 8"	4	12"	11'- 8"	--	---	-----	-----	4	12"	2'- 6"	3'- 8"	5'-11"	4	12"	6'- 0"	4	12"	6'- 0"
5	6	8"	8"	8"	8"	10	10'- 0"	10	10'- 0"	4	4'- 0"	4	12"	10'- 8"	4	12"	11'- 8"	--	---	-----	-----	4	12"	2'- 6"	4'- 2"	6'- 5"	4	12"	7'- 0"	4	12"	7'- 0"
5	7	8"	8"	8"	8"	10	10'- 0"	10	10'- 0"	5	5'- 0"	4	12"	10'- 8"	4	12"	11'- 8"	--	---	-----	-----	4	12"	2'- 6"	4'- 8"	6'-11"	4	12"	8'- 0"	4	12"	8'- 0"
6	4	8"	8"	8"	8"	12	12'- 0"	12	12'- 0"	2	2'- 0"	4	12"	12'- 7"	4	12"	13'- 8"	4	12"	2'- 8 3/8"	5'- 2"	4	12"	2'- 8 3/8"	3'- 2"	5'- 7"	4	12"	5'- 0"	4	12"	5'- 0"
6	5	8"	8"	8"	8"	12	12'- 0"	12	12'- 0"	3	3'- 0"	4	12"	12'- 7"	4	12"	13'- 8"	4	12"	2'- 8 3/8"	5'- 2"	4	12"	2'- 8 3/8"	3'- 8"	6'- 1"	4	12"	6'- 0"	4	12"	6'- 0"
6	6	8"	8"	8"	8"	12	12'- 0"	12	12'- 0"	4	4'- 0"	4	12"	12'- 7"	4	12"	13'- 8"	4	12"	2'- 8 3/8"	5'- 2"	4	12"	2'- 8 3/8"	4'- 2"	6'- 7"	4	12"	7'- 0"	4	12"	7'- 0"
6	7	8"	8"	8"	8"	12	12'- 0"	12	12'- 0"	5	5'- 0"	4	12"	12'- 7"	4	12"	13'- 8"	4	12"	2'-11"	5'- 8"	4	12"	2'- 8 3/8"	4'- 8"	7'- 1"	4	12"	8'- 0"	4	12"	8'- 0"
6	8	8"	8"	8"	8"	12	12'- 0"	12	12'- 0"	6	6'- 0"	4	12"	12'- 7"	4	12"	13'- 8"	4	12"	3'- 2"	6'- 2"	4	12"	2'- 8 3/8"	5'- 2"	7'- 7"	4	12"	9'- 0"	4	12"	9'- 0"
7	4	8"	8"	8"	8"	14	14'- 0"	14	14'- 0"	2	2'- 0"	4	11"	14'- 7"	4	11"	15'- 8"	--	---	-----	-----	5	11"	2'-10 3/4"	3'- 2"	5'- 9"	4	12"	5'- 0"	4	11 1/2"	5'- 0"
7	6	8"	8"	8"	8"	14	14'- 0"	14	14'- 0"	4	4'- 0"	4	11"	14'- 7"	4	11"	15'- 8"	--	---	-----	-----	5	11"	2'-10 3/4"	4'- 2"	6'- 9"	4	12"	7'- 0"	4	12"	7'- 0"
7	8	8"	8"	8"	8"	14	14'- 0"	14	14'- 0"	6	6'- 0"	4	10"	14'- 7"	4	10"	15'- 8"	4	10"	3'-2"	6'- 2"	4	10"	2'-10 3/4"	5'- 2"	7'-10"	4	12"	9'- 0"	4	12"	9'- 0"
7	10	8"	8"	8"	8"	14	14'- 0"	14	14'- 0"	8	8'- 0"	4	9"	14'- 7"	4	9"	15'- 8"	4	9"	3'- 6"	6'- 9"	4	9"	2'-10 3/4"	6'- 2"	8'-10"	5	12"	11'- 0"	4	12"	11'- 0"
8	4	8"	8"	8"	8"	16	16'- 0"	16	16'- 0"	2	2'- 0"	4	8"	16'- 4"	4	8"	17'- 8"	4	8"	3'- 1 1/4"	5'-11"	4	8"	3'- 1 1/4"	3'- 2"	6'- 0"	4	12"	5'- 0"	4	10"	5'- 0"
8	6	8"	8"	8"	8"	16	16'- 0"	16	16'- 0"	4	4'- 0"	5	11"	16'- 4"	5	11"	17'- 8"	4	11"	3'- 1 1/4"	5'-11"	5	11"	3'- 1 1/4"	4'- 2"	6'-11"	4	12"	7'- 0"	4	10"	7'- 0"
8	8	8"	8"	8"	8"	16	16'- 0"	16	16'- 0"	6	6'- 0"	5	11"	16'- 4"	5	11"	17'- 8"	4	11"	3'- 1 1/4"	5'-11"	5	11"	3'- 1 1/4"	5'- 2"	7'-11"	4	12"	9'- 0"	4	10"	9'- 0"
8	10	8"	8"	8"	8"	16	16'- 0"	16	16'- 0"	8	8'- 0"	5	10"	16'- 4"	5	10"	17'- 8"	4	10"	3'- 6"	6'- 9"	5	10"	3'- 1 1/4"	6'- 2"	8'-11"	5	12"	11'- 0"	4	10 1/2"	11'- 0"
9	4	8"	8"	8"	8"	18	18'- 0"	18	18'- 0"	2	2'- 0"	5	9"	18'- 4"	4	9"	19'- 8"	4	9"	3'- 3 5/8"	6'- 4"	5	9"	3'- 3 5/8"	3'- 2"	6'- 2"	4	12"	5'- 0"	4	9"	5'- 0"
9	6	8 1/4"	8 1/4"	8"	8"	18	18'- 0"	18	18'- 0"	4	4'- 0"	5	10"	18'- 4"	5	10"	19'- 8"	4	10"	3'- 3 5/8"	6'- 4"	5	10"	3'- 3 5/8"	4'- 2 1/4"	7'- 2"	4	12"	7'- 0"	4	10"	7'- 0"
9	8	8 1/2"	8 1/2"	8"	8"	18	18'- 0"	18	18'- 0"	6	6'- 0"	5	9"	18'- 4"	5	9"	19'- 8"	4	9"	3'- 3 5/8"	6'- 4"	5	9"	3'- 3 5/8"	5'- 2 1/2"	8'- 2"	4	12"	9'- 1"	4	10"	9'- 1"
9	10	9"	9"	8"	8"	18	18'- 0"	18	18'- 0"	8	8'- 0"	6	12"	18'- 4"	5	12"	19'- 8"	4	12"	3'- 7"	6'-10"	6	12"	3'-10"	6'- 7"	10'- 0"	5	12"	11'- 2"	4	10"	11'- 2"
9	12	9"	9"	8"	8"	18	18'- 0"	18	18'- 0"	10	10'- 0"	6	8"	18'- 4"	5	8"	19'- 8"	4	8"	4'- 0"	7'- 9"	5	8"	3'- 3 5/8"	7'- 3"	10'- 3"	5	8"	13'- 2"	4	11"	13'- 2"
10	4	8 1/2"	8 1/2"	8"	8"	20	20'- 0"	20	20'- 0"	2	2'- 0"	5	9"	20'- 4"	5	9"	21'- 8"	--	---	-----	-----	6	9"	4'- 0"	3'- 6"	7'- 2"	4	12"	5'- 1"	4	8"	5'- 1"
10	6	8 3/4"	8 3/4"	8"	8"	20	20'- 0"	20	20'- 0"	4	4'- 0"	5	9"	20'- 4"	5	9"	21'- 8"	4	9"	3'- 6"	6'- 9"	5	9"	3'- 6"	4'- 2 3/4"	7'- 5"	4	12"	7'- 2"	4	9"	7'- 2"
10	8	9"	9"	8"	8"	20	20'- 0"	20	20'- 0"	6	6'- 0"	6	12"	20'- 4"	6	12"	21'- 8"	4	12"	3'- 6"	6'- 9"	6	12"	4'- 0"	5'- 7"	9'- 2"	4	12"	9'- 2"	4	10"	9'- 2"
10	10	9 1/4"	9 1/4"	8"	8"	20	20'- 0"	20	20'- 0"	8	8'- 0"	5	8"	20'- 4"	5	8"	21'- 8"	4	8"	3'- 7 1/4"	6'-11"	5	8"	3'- 6"	6'- 3 1/4"	9'- 5"	4	10"	11'- 2"	4	10"	11'- 2"
10	12	9 3/4"	9 3/4"	8"	8"	20	20'- 0"	20	20'- 0"	10	10'- 0"	6	10"	20'- 4"	5	10"	21'- 8"	4	10"	4'- 1"	7'-11"	5	10"	3'- 6"	7'- 3 3/4"	10'- 6"	5	8"	13'- 3"	4	10"	13'- 3"
12	6	9 3/4"	9 3/4"	8"	8"	24	24'- 0"	24	24'- 0"	4	4'- 0"	5	8"	24'- 4"	5	8"	25'- 8"	4	8"	3'-10 3/4"	7'- 6"	5	8"	3'-10 3/4"	4'- 3 3/4"	7'-11"	4	12"	7'- 3"	4	7 1/2"	7'- 3"
12	8	9 3/4"	9 3/4"	8"	8"	24	24'- 0"	24	24'- 0"	6	6'- 0"	6	11"	24'- 4"	6	11"	25'- 8"	4	11"	3'-10 3/4"	7'- 6"	6	11"	4'- 5"	5'- 7 1/4"	9'- 8"	4	12"	9'- 3"	4	8"	9'- 3"
12	10	10 1/4"	10 1/4"	8"	8"	24	24'- 0"	24	24'- 0"	8	8'- 0"	6	9"	24'- 4"	6	9"	25'- 8"	4	9"	3'-10 3/4"	7'- 6"	6	9"	4'- 5"	6'- 7 3/4"	10'- 8"	4	10"	11'- 5"	4	10"	11'- 5"
12	12	10 1/4"	10 1/4"	8"	8"	24	24'- 0"	24	24'- 0"	10	10'- 0"	7	12"	24'- 4"	7	12"	25'- 8"	5	12"	4'- 1"	7'-11"	7	12"	4'-10"	7'-11 1/4"	12'- 3"	5	10"	13'- 5"	4	10"	13'- 5"

A COPY OF THE ORIGINAL SEALED AND SIGNED DRAWING IS ON FILE IN THE CENTRAL OFFICE.

VDOT
ROAD AND BRIDGE STANDARDS

SHEET 1 OF 2 | REVISION DATE
1003.07 | 07/11

DOUBLE BOX CULVERTS

2 TO 5 FT. FILLS

VIRGINIA DEPARTMENT OF TRANSPORTATION

SPECIFICATION REFERENCE

BCD-05

FOR TYPICAL SECTION, NOTES AND OTHER DETAILS, REFER TO STANDARD BCD-DT.

SPAN (FT.)	HGHT (FT.)	REINFORCING STEEL BT1 SIZE	SPACING c-c	a	b	c	d	e	f	g	LENGTH	NO. BL1 #4 BARS	NO. BL2 #3 BARS	REINFORCING STEEL (LBS/LONG. JT)	QUAN./LF CONCRETE CLASS A4 (CY/LF)	REINFORCING STEEL (LBS/LF)	HEADWALLS G HEADWALL LENGTH	HW1 SIZE	HW1 LENGTH	NO. HW2 BARS	NO. HW3 BARS	INLET CONCRETE CL. A4 (CY)	INLET REINFORCING STEEL (LBS)	OUTLET CONCRETE CL. A4 (CY)	OUTLET REINFORCING STEEL (LBS)	WINGWALL
3	3	4	12"	2'- 8 7/8"	0'- 4 1/2"	1'- 6 5/8"	0'- 5 7/8"	0'- 3 3/4"	7'- 7 7/8"	-----	7'-11"	32	12	30.956	0.695	79.439	9'- 6"	6	9'- 2"	1	4	1.433	67.988	1.425	55.073	A
3	4	4	12"	2'- 8 7/8"	0'- 4 1/2"	1'- 6 5/8"	0'- 5 7/8"	0'- 3 3/4"	7'- 7 7/8"	-----	7'-11"	32	18	33.074	0.768	85.703	9'- 6"	6	9'- 2"	1	5	1.531	71.439	1.517	55.073	C
4	3	4	12"	3'- 6 1/2"	0'- 4 1/2"	1'-11 1/2"	0'- 5 7/8"	0'- 3 3/4"	9'- 8"	-----	9'-11"	40	12	37.636	0.792	92.688	11'- 6"	6	11'- 2"	1	4	1.635	80.004	1.634	67.089	A
4	4	4	12"	3'- 6 1/2"	0'- 4 1/2"	1'-11 1/2"	0'- 5 7/8"	0'- 3 3/4"	9'- 8"	-----	9'-11"	40	18	39.754	0.866	98.952	11'- 6"	6	11'- 2"	1	5	1.734	83.455	1.726	67.089	C
4	5	4	12"	3'- 6 1/2"	0'- 4 1/2"	1'-11 1/2"	0'- 5 7/8"	0'- 3 3/4"	9'- 8"	-----	9'-11"	40	24	41.872	0.940	105.216	11'- 6"	6	11'- 2"	1	6	1.833	86.907	1.819	67.089	E
4	6	4	12"	3'- 6 1/2"	0'- 4 1/2"	1'-11 1/2"	0'- 5 7/8"	0'- 3 3/4"	9'- 8"	-----	9'-11"	40	30	43.990	1.013	111.480	11'- 6"	6	11'- 2"	1	7	1.932	90.358	1.912	67.089	G
5	3	4	12"	4'- 4 1/8"	0'- 4 1/2"	2'- 4 1/4"	0'- 5 7/8"	0'- 3 3/4"	11'- 8"	-----	11'-11"	48	12	44.316	0.890	106.159	13'- 6"	6	13'- 2"	1	4	1.837	92.020	1.843	79.105	A
5	4	4	12"	4'- 4 1/8"	0'- 4 1/2"	2'- 4 1/4"	0'- 5 7/8"	0'- 3 3/4"	11'- 8"	-----	11'-11"	48	18	46.434	0.964	112.423	13'- 6"	6	13'- 2"	1	5	1.936	95.471	1.935	79.105	C
5	5	4	12"	4'- 4 1/8"	0'- 4 1/2"	2'- 4 1/4"	0'- 5 7/8"	0'- 3 3/4"	11'- 8"	-----	11'-11"	48	24	48.552	1.037	118.687	13'- 6"	6	13'- 2"	1	6	2.035	98.923	2.028	79.105	E
5	6	4	12"	4'- 4 1/8"	0'- 4 1/2"	2'- 4 1/4"	0'- 5 7/8"	0'- 3 3/4"	11'- 8"	-----	11'-11"	48	30	50.670	1.111	124.951	13'- 6"	6	13'- 2"	1	7	2.134	102.374	2.121	79.105	G
5	7	4	12"	4'- 4 1/8"	0'- 4 1/2"	2'- 4 1/4"	0'- 5 7/8"	0'- 3 3/4"	11'- 8"	-----	11'-11"	48	36	52.788	1.185	131.215	13'- 6"	6	13'- 2"	1	8	2.233	105.825	2.214	79.105	I
6	4	4	12"	5'- 1 3/4"	0'- 4 1/2"	2'- 9"	0'- 5 7/8"	0'- 3 3/4"	13'- 8"	-----	13'-11"	56	18	53.114	1.060	143.938	15'- 6"	6	15'- 2"	1	5	2.138	107.487	2.144	91.121	C
6	5	4	12"	5'- 1 3/4"	0'- 4 1/2"	2'- 9"	0'- 5 7/8"	0'- 3 3/4"	13'- 8"	-----	13'-11"	56	24	55.232	1.134	150.390	15'- 6"	6	15'- 2"	1	6	2.237	110.939	2.237	91.121	E
6	6	4	12"	5'- 1 3/4"	0'- 4 1/2"	2'- 9"	0'- 5 7/8"	0'- 3 3/4"	13'- 8"	-----	13'-11"	56	30	57.350	1.207	156.842	15'- 6"	6	15'- 2"	1	7	2.336	114.390	2.330	91.121	G
6	7	4	12"	5'- 1 3/4"	0'- 4 1/2"	2'- 9"	0'- 5 7/8"	0'- 3 3/4"	13'- 8"	-----	13'-11"	56	36	59.468	1.281	164.656	15'- 6"	6	15'- 2"	1	8	2.435	117.841	2.423	91.121	I
6	8	4	12"	5'- 1 3/4"	0'- 4 1/2"	2'- 9"	0'- 5 7/8"	0'- 3 3/4"	13'- 8"	-----	13'-11"	56	42	61.586	1.354	172.470	15'- 6"	6	15'- 2"	1	9	2.534	121.293	2.515	91.121	K
7	4	4	11"	5'-11 3/8"	0'- 4 1/2"	3'- 1 7/8"	0'- 5 7/8"	0'- 3 3/4"	15'- 8 1/8"	-----	15'-11"	64	18	59.794	1.158	160.596	17'- 6"	6	17'- 2"	1	5	2.341	119.503	2.353	103.137	C
7	6	4	11"	5'-11 3/8"	0'- 4 1/2"	3'- 1 7/8"	0'- 5 7/8"	0'- 3 3/4"	15'- 8 1/8"	-----	15'-11"	64	30	64.030	1.305	175.066	17'- 6"	6	17'- 2"	1	7	2.539	126.406	2.539	103.137	G
7	8	4	10"	5'-11 3/8"	0'- 4 1/2"	3'- 1 7/8"	0'- 5 7/8"	0'- 3 3/4"	15'- 8 1/8"	-----	15'-11"	64	42	68.266	1.451	206.300	17'- 6"	6	17'- 2"	1	9	2.736	133.309	2.724	103.137	K
7	10	4	9"	5'-11 3/8"	0'- 4 1/2"	3'- 1 7/8"	0'- 5 7/8"	0'- 3 3/4"	15'- 8 1/8"	-----	15'-11"	64	54	72.502	1.596	246.489	17'- 6"	6	17'- 2"	1	11	2.934	140.211	2.910	103.137	O
8	4	4	8"	6'- 8 7/8"	0'- 4 1/2"	3'- 6 5/8"	0'- 5 7/8"	0'- 3 3/4"	17'- 7 7/8"	-----	17'-11"	72	18	66.474	1.251	230.979	19'- 6"	6	19'- 2"	1	5	2.543	131.519	2.562	115.153	C
8	6	5	11"	6'- 8 7/8"	0'- 4 5/8"	3'- 6 5/8"	0'- 6"	0'- 3 3/4"	17'- 7 7/8"	-----	17'-11"	72	30	70.710	1.398	253.162	19'- 6"	6	19'- 2"	1	7	2.741	138.422	2.748	115.153	G
8	8	5	11"	6'- 8 7/8"	0'- 4 5/8"	3'- 6 5/8"	0'- 6"	0'- 3 3/4"	17'- 7 7/8"	-----	17'-11"	72	42	74.946	1.545	268.516	19'- 6"	6	19'- 2"	1	9	2.939	145.325	2.933	115.153	K
8	10	5	10"	6'- 8 7/8"	0'- 4 5/8"	3'- 6 5/8"	0'- 6"	0'- 3 3/4"	17'- 7 7/8"	-----	17'-11"	72	54	79.182	1.690	309.929	19'- 6"	6	19'- 2"	1	11	3.137	152.227	3.119	115.153	O
9	4	5	9"	7'- 6 1/2"	0'- 4 5/8"	3'-11 1/2"	0'- 6"	0'- 3 3/4"	19'- 8"	-----	19'-11"	80	18	73.154	1.346	279.765	21'- 6"	6	21'- 2"	1	5	2.745	143.535	2.771	127.169	C
9	6	5	10"	7'- 6 3/8"	0'- 4 7/8"	3'-11 1/4"	0'- 6 1/4"	0'- 4"	19'- 8"	-----	19'-11"	80	30	77.390	1.524	291.536	21'- 6"	6	21'- 2"	1	7	2.933	150.438	2.946	127.169	G
9	8	5	9"	7'- 6 1/4"	0'- 5 1/8"	3'-11"	0'- 6 5/8"	0'- 4 1/4"	19'- 8"	-----	19'-11"	80	42	81.626	1.700	330.346	21'- 6"	6	21'- 2"	1	9	3.120	157.341	3.121	127.169	K
9	10	6	12"	7'- 6"	0'- 5 3/4"	3'-10 1/2"	0'- 7 1/2"	0'- 4 3/4"	19'- 8"	-----	20'- 0"	80	54	85.862	1.908	353.999	21'- 6"	6	21'- 2"	1	11	3.297	164.243	3.285	127.169	O
9	12	4	8"	7'- 6"	0'- 5 1/2"	3'-10 1/2"	0'- 7 1/4"	0'- 4 3/4"	19'- 8"	-----	20'- 0"	80	66	90.098	2.051	427.301	21'- 6"	6	21'- 2"	1	13	3.495	171.146	3.471	127.169	S
10	4	5	9"	8'- 3 7/8"	0'- 5 1/8"	4'- 3 3/4"	0'- 6 5/8"	0'- 4 1/4"	21'- 8"	-----	21'-11"	88	18	79.834	1.510	322.193	23'- 6"	6	23'- 2"	1	5	2.924	155.551	2.956	139.185	C
10	6	5	9"	8'- 3 3/4"	0'- 5 3/8"	4'- 3 1/2"	0'- 7"	0'- 4 1/2"	21'- 8"	-----	22'- 0"	88	30	84.070	1.690	341.263	23'- 6"	6	23'- 2"	1	7	3.109	162.454	3.129	139.185	G
10	8	6	12"	8'- 3 5/8"	0'- 5 3/4"	4'- 3 1/4"	0'- 7 1/2"	0'- 4 3/4"	21'- 8"	-----	22'- 0"	88	42	88.306	1.870	375.166	23'- 6"	6	23'- 2"	1	9	3.295	169.357	3.303	139.185	K
10	10	5	8"	8'- 3 1/2"	0'- 5 7/8"	4'- 3"	0'- 7 3/4"	0'- 5"	21'- 8"	-----	22'- 0"	88	54	92.542	2.049	412.716	23'- 6"	6	23'- 2"	1	11	3.499	176.259	3.495	139.185	P
10	12	6	10"	8'- 3 1/4"	0'- 6 1/2"	4'- 2 1/2"	0'- 8 1/2"	0'- 5 1/2"	21'- 8"	-----	22'- 0"	88	66	96.778	2.262	451.806	23'- 6"	6	23'- 2"	1	13	3.673	183.162	3.656	139.185	T
12	6	5	8"	9'-10 1/2"	0'- 6 3/8"	5'- 1/8"	0'- 8 3/8"	0'- 5 1/2"	25'- 8 1/8"	-----	26'- 0"	104	30	97.430	2.060	434.811	27'- 6"	6	27'- 2"	1	7	3.463	186.486	3.496	163.217	H
12	8	6	11"	9'-10 1/2"	0'- 6 1/2"	5'- 1/8"	0'- 8 1/2"	0'- 5 1/2"	25'- 8 1/8"	-----	26'- 0"	104	42	101.666	2.206	454.884	27'- 6"	6	27'- 2"	1	9	3.660	193.389	3.681	163.217	L
12	10	6	9"	9'-10 1/4"	0'- 7"	4'-11 5/8"	0'- 9 1/4"	0'- 6"	25'- 8 1/8"	-----	26'- 1"	104	54	105.902	2.428	550.271	27'- 6"	6	27'- 2"	1	11	3.828	200.291	3.837	163.217	P
12	12	7	12"	9'-10 1/4"	0'- 7 1/8"	4'-11 3/4"	0'- 9 1/4"	0'- 5 7/8"	25'- 8"	-----	26'- 1"	104	66	110.138	2.572	598.820	27'- 6"	6	27'- 2"	1	13	4.026	207.194	4.022	163.217	T

A COPY OF THE ORIGINAL SEALED AND SIGNED DRAWING IS ON FILE IN THE CENTRAL OFFICE.

SPECIFICATION REFERENCE

DOUBLE BOX CULVERTS

2 TO 5 FT. FILLS

VIRGINIA DEPARTMENT OF TRANSPORTATION

VDOT

ROAD AND BRIDGE STANDARDS

REVISION DATE 07/11

SHEET 2 OF 2

1003.08

BCD-10

FOR TYPICAL SECTION, NOTES AND OTHER DETAILS, REFER TO STANDARD BCD-DT.

DIMENSIONS						REINFORCING STEEL																										
SPAN	HGHT	T1	T2	T3	T4							BH1			BH2			BH3				BH4					BV1			BV2		
(FT.)	(FT.)	TOP SLAB	BOTTOM SLAB	EXTERIOR WALL (IN.)	INTERIOR WALL (IN.)	A	B	C	D	E	F	SIZE	SPACING C-C	LENGTH	SIZE	SPACING C-C	LENGTH	SIZE	SPACING C-C	a	LENGTH	SIZE	SPACING C-C	a	b	LENGTH	SIZE	SPACING C-C	LENGTH	SIZE	SPACING C-C	LENGTH
3	3	8"	8"	8"	8"	6	6'- 0"	6	6'- 0"	1	1'- 0"	4	12"	7'- 6"	4	12"	7'- 8"	--	---	-----	-----	4	12"	2'- 1¼"	2'- 8"	4'- 6"	4	12"	4'- 0"	4	12"	4'- 0"
3	4	8"	8"	8"	8"	6	6'- 0"	6	6'- 0"	2	2'- 0"	4	12"	7'- 6"	4	12"	7'- 8"	--	---	-----	-----	4	12"	2'- 1¼"	3'- 2"	5'- 0"	4	12"	5'- 0"	4	12"	5'- 0"
4	3	8"	8"	8"	8"	8	8'- 0"	8	8'- 0"	1	1'- 0"	4	12"	9'- 1"	4	12"	9'- 8"	--	---	-----	-----	4	12"	2'- 3⅝"	2'- 8"	4'- 8"	4	12"	4'- 0"	4	12"	4'- 0"
4	4	8"	8"	8"	8"	8	8'- 0"	8	8'- 0"	2	2'- 0"	4	12"	9'- 1"	4	12"	9'- 8"	--	---	-----	-----	4	12"	2'- 3⅝"	3'- 2"	5'- 2"	4	12"	5'- 0"	4	12"	5'- 0"
4	5	8"	8"	8"	8"	8	8'- 0"	8	8'- 0"	3	3'- 0"	4	12"	9'- 1"	4	12"	9'- 8"	--	---	-----	-----	4	12"	2'- 3⅝"	3'- 8"	5'- 8"	4	12"	6'- 0"	4	12"	6'- 0"
4	6	8"	8"	8"	8"	8	8'- 0"	8	8'- 0"	4	4'- 0"	4	12"	9'- 1"	4	12"	9'- 8"	--	---	-----	-----	4	12"	2'- 3⅝"	4'- 2"	6'- 2"	4	12"	7'- 0"	4	12"	7'- 0"
5	3	8"	8"	8"	8"	10	10'- 0"	10	10'- 0"	1	1'- 0"	4	12"	10'- 8"	4	12"	11'- 8"	--	---	-----	-----	4	12"	2'- 6"	2'- 8"	4'-11"	4	12"	4'- 0"	4	12"	4'- 0"
5	4	8"	8"	8"	8"	10	10'- 0"	10	10'- 0"	2	2'- 0"	4	12"	10'- 8"	4	12"	11'- 8"	--	---	-----	-----	4	12"	2'- 6"	3'- 2"	5'- 5"	4	12"	5'- 0"	4	12"	5'- 0"
5	5	8"	8"	8"	8"	10	10'- 0"	10	10'- 0"	3	3'- 0"	4	12"	10'- 8"	4	12"	11'- 8"	--	---	-----	-----	4	12"	2'- 6"	3'- 8"	5'-11"	4	12"	6'- 0"	4	12"	6'- 0"
5	6	8"	8"	8"	8"	10	10'- 0"	10	10'- 0"	4	4'- 0"	4	12"	10'- 8"	4	12"	11'- 8"	--	---	-----	-----	4	12"	2'- 6"	4'- 2"	6'- 5"	4	12"	7'- 0"	4	12"	7'- 0"
5	7	8"	8"	8"	8"	10	10'- 0"	10	10'- 0"	5	5'- 0"	4	12"	10'- 8"	4	12"	11'- 8"	--	---	-----	-----	4	12"	2'- 6"	4'- 8"	6'-11"	4	12"	8'- 0"	4	12"	8'- 0"
6	4	8"	8"	8"	8"	12	12'- 0"	12	12'- 0"	2	2'- 0"	4	12"	12'- 7"	4	12"	13'- 8"	--	---	-----	-----	4	12"	2'- 8⅜"	3'- 2"	5'- 7"	4	12"	5'- 0"	4	12"	5'- 0"
6	5	8"	8"	8"	8"	12	12'- 0"	12	12'- 0"	3	3'- 0"	4	12"	12'- 7"	4	12"	13'- 8"	--	---	-----	-----	4	12"	2'- 8⅜"	3'- 8"	6'- 1"	4	12"	6'- 0"	4	12"	6'- 0"
6	6	8"	8"	8"	8"	12	12'- 0"	12	12'- 0"	4	4'- 0"	4	12"	12'- 7"	4	12"	13'- 8"	--	---	-----	-----	4	12"	2'- 8⅜"	4'- 2"	6'- 7"	4	12"	7'- 0"	4	12"	7'- 0"
6	7	8"	8"	8"	8"	12	12'- 0"	12	12'- 0"	5	5'- 0"	4	12"	12'- 7"	4	12"	13'- 8"	--	---	-----	-----	4	12"	2'- 8⅜"	4'- 8"	7'- 1"	4	12"	8'- 0"	4	12"	8'- 0"
6	8	8"	8"	8"	8"	12	12'- 0"	12	12'- 0"	6	6'- 0"	4	12"	12'- 7"	4	12"	13'- 8"	3	12"	3'- 2"	6'- 2"	4	12"	2'- 8⅜"	5'- 2"	7'- 7"	4	12"	9'- 0"	4	12"	9'- 0"
7	4	8"	8"	8"	8"	14	14'- 0"	14	14'- 0"	2	2'- 0"	4	12"	14'- 7"	4	12"	15'- 8"	--	---	-----	-----	5	12"	2'-10¾"	3'- 2"	5'- 9"	4	12"	5'- 0"	4	12"	5'- 0"
7	6	8"	8"	8"	8"	14	14'- 0"	14	14'- 0"	4	4'- 0"	4	12"	14'- 7"	4	12"	15'- 8"	4	12"	2'-10¾"	5'- 6"	4	12"	2'-10¾"	4'- 2"	6'-10"	4	12"	7'- 0"	4	12"	7'- 0"
7	8	8"	8"	8"	8"	14	14'- 0"	14	14'- 0"	6	6'- 0"	4	12"	14'- 7"	4	12"	15'- 8"	4	12"	3'- 2"	6'- 2"	4	12"	2'-10¾"	5'- 2"	7'-10"	4	12"	9'- 0"	4	12"	9'- 0"
7	10	8"	8"	8"	8"	14	14'- 0"	14	14'- 0"	8	8'- 0"	4	11"	14'- 7"	4	11"	15'- 8"	--	---	-----	-----	5	11"	2'-10¾"	6'- 2"	8'- 9"	5	10"	11'- 0"	4	12"	11'- 0"
8	4	8¼"	8¼"	8"	8"	16	16'- 0"	16	16'- 0"	2	2'- 0"	4	10"	16'- 7"	4	10"	17'- 8"	--	---	-----	-----	5	10"	3'- 1¼"	3'- 2¼"	6'- 0"	4	9"	5'- 0"	4	12"	5'- 0"
8	6	8½"	8½"	8"	8"	16	16'- 0"	16	16'- 0"	4	4'- 0"	4	10"	16'- 7"	4	10"	17'- 8"	3	10"	3'- 1¼"	6'- 0"	4	10"	3'- 1¼"	4'- 2½"	7'- 1"	4	12"	7'- 1"	4	12"	7'- 1"
8	8	8¾"	8¾"	8"	8"	16	16'- 0"	16	16'- 0"	6	6'- 0"	4	9"	16'- 7"	4	9"	17'- 8"	3	9"	3'- 1¼"	6'- 0"	4	9"	3'- 1¼"	5'- 2¾"	8'- 1"	4	12"	9'- 2"	4	12"	9'- 2"
8	10	9"	9"	8"	8"	16	16'- 0"	16	16'- 0"	8	8'- 0"	5	10"	16'- 7"	4	10"	17'- 8"	--	---	-----	-----	5	10"	3'- 1¼"	6'- 3"	9'- 0"	5	11"	11'- 2"	4	12"	11'- 2"
9	4	9¼"	9¼"	8"	8"	18	18'- 0"	18	18'- 0"	2	2'- 0"	5	9"	18'- 7"	4	9"	19'- 8"	4	9"	3'- 3⅝"	6'- 4"	4	9"	3'- 3⅝"	3'- 3¼"	6'- 4"	4	8½"	5'- 2"	4	12"	5'- 2"
9	6	9½"	9½"	8"	8"	18	18'- 0"	18	18'- 0"	4	4'- 0"	5	9"	18'- 7"	4	9"	19'- 8"	3	9"	3'- 3⅝"	6'- 5"	4	9"	3'- 3⅝"	4'- 3½"	7'- 4"	4	12"	7'- 3"	4	12"	7'- 3"
9	8	9¾"	9¾"	8"	8"	18	18'- 0"	18	18'- 0"	6	6'- 0"	5	9"	18'- 7"	4	9"	19'- 8"	3	9"	3'- 3⅝"	6'- 5"	4	9"	3'- 3⅝"	5'- 3¾"	8'- 4"	4	12"	9'- 3"	4	12"	9'- 3"
9	10	9¾"	9¾"	8"	8"	18	18'- 0"	18	18'- 0"	8	8'- 0"	5	9"	18'- 7"	4	9"	19'- 8"	4	9"	3'- 8"	6'-11"	4	9"	3'- 3⅝"	6'- 3¾"	9'- 4"	5	12"	11'- 3"	4	12"	11'- 3"
9	12	10"	10"	8"	8"	18	18'- 0"	18	18'- 0"	10	10'- 0"	5	8"	18'- 7"	4	8"	19'- 8"	4	8"	4'- 1"	7'-11"	4	8"	3'- 3⅝"	7'- 4"	10'- 4"	5	7"	13'- 4"	4	12"	13'- 4"
10	4	10"	10"	8"	8"	20	20'- 0"	20	20'- 0"	2	2'- 0"	5	8"	20'- 4"	4	8"	21'- 8"	4	8"	3'- 6"	6'- 9"	4	8"	3'- 6"	3'- 4"	6'- 7"	4	8"	5'- 4"	4	12"	5'- 4"
10	6	10¼"	10¼"	8"	8"	20	20'- 0"	20	20'- 0"	4	4'- 0"	5	9"	20'- 4"	5	9"	21'- 8"	--	---	-----	-----	5	9"	3'- 6"	4'- 4¼"	7'- 6"	4	12"	7'- 5"	4	12"	7'- 5"
10	8	10½"	10½"	8"	8"	20	20'- 0"	20	20'- 0"	6	6'- 0"	5	9"	20'- 4"	5	9"	21'- 8"	--	---	-----	-----	5	9"	3'- 6"	5'- 4½"	8'- 7"	4	12"	9'- 5"	4	12"	9'- 5"
10	10	10¾"	10¾"	8"	8"	20	20'- 0"	20	20'- 0"	8	8'- 0"	5	10"	20'- 4"	5	10"	21'- 8"	3	10"	3'- 9"	7'- 4"	5	10"	3'- 6"	6'- 4¾"	9'- 7"	5	12"	11'- 5"	4	12"	11'- 5"
10	12	10¾"	10¾"	8"	8"	20	20'- 0"	20	20'- 0"	10	10'- 0"	5	10"	20'- 4"	5	10"	21'- 8"	4	10"	4'- 1"	7'-11"	5	10"	3'- 6"	7'- 4¾"	10'- 7"	5	6"	13'- 5"	4	12"	13'- 5"
12	6	12"	12"	8"	8"	24	24'- 0"	24	24'- 0"	4	4'- 0"	6	9"	24'- 7"	5	9"	25'- 8"	4	9"	3'-10¾"	7'- 6"	4	9"	3'-10¾"	4'- 6"	8'- 2"	4	11"	7'- 8"	4	12"	7'- 8"
12	8	12¼"	12¼"	8"	8"	24	24'- 0"	24	24'- 0"	6	6'- 0"	6	9"	24'- 7"	5	9"	25'- 8"	4	9"	3'-10¾"	7'- 6"	4	9"	3'-10¾"	5'- 6¼"	9'- 2"	4	12"	9'- 9"	4	12"	9'- 9"
12	10	12½"	12½"	8"	8"	24	24'- 0"	24	24'- 0"	8	8'- 0"	6	9"	24'- 7"	5	9"	25'- 8"	--	---	-----	-----	5	9"	3'-10¾"	6'- 6½"	10'- 1"	5	12"	11'- 9"	4	12"	11'- 9"
12	12	12½"	12½"	8"	8"	24	24'- 0"	24	24'- 0"	10	10'- 0"	6	9"	24'- 7"	6	9"	25'- 8"	--	---	-----	-----	6	9"	4'- 5"	7'-10"	11'-10"	5	8"	13'- 9"	4	12"	13'- 9"

A COPY OF THE ORIGINAL SEALED AND SIGNED DRAWING IS ON FILE IN THE CENTRAL OFFICE.

VDOT
ROAD AND BRIDGE STANDARDS

SHEET 1 OF 2 | REVISION DATE
1003.09 | 07/11

DOUBLE BOX CULVERTS

5 TO 10 FT. FILLS

VIRGINIA DEPARTMENT OF TRANSPORTATION

SPECIFICATION REFERENCE

BCD-10

FOR TYPICAL SECTION, NOTES AND OTHER DETAILS, REFER TO STANDARD BCD-DT.

SPAN (FT.)	HGHT (FT.)	REINFORCING STEEL BT1 SIZE	SPACING c-c	a	b	c	d	e	f	g	LENGTH	NO. BL1 #4 BARS	NO. BL2 #3 BARS	REINFORCING STEEL (LBS/LONG. JT)	QUAN./LF CONCRETE CLASS A4 (CY/LF)	REINFORCING STEEL (LBS/LF)	HEADWALLS G HEADWALL LENGTH	HW1 SIZE	HW1 LENGTH	NO. HW2 BARS	NO. HW3 BARS	INLET CONCRETE CL. A4 (CY)	INLET REINFORCING STEEL (LBS)	OUTLET CONCRETE CL. A4 (CY)	OUTLET REINFORCING STEEL (LBS)	WINGWALL
3	3	4	12"	2'- 8⅞"	0'- 4½"	1'- 6⅝"	0'- 5⅞"	0'- 3¾"	7'- 7⅞"	-----	7'-11"	32	12	30.956	0.695	79.439	9'- 6"	6	9'- 2"	1	4	1.433	67.988	1.425	55.073	A
3	4	4	12"	2'- 8⅞"	0'- 4½"	1'- 6⅝"	0'- 5⅞"	0'- 3¾"	7'- 7⅞"	-----	7'-11"	32	18	33.074	0.768	85.703	9'- 6"	6	9'- 2"	1	5	1.531	71.439	1.517	55.073	C
4	3	4	12"	3'- 6½"	0'- 4½"	1'-11½"	0'- 5⅞"	0'- 3¾"	9'- 8"	-----	9'-11"	40	12	37.636	0.792	92.688	11'- 6"	6	11'- 2"	1	4	1.635	80.004	1.634	67.089	A
4	4	4	12"	3'- 6½"	0'- 4½"	1'-11½"	0'- 5⅞"	0'- 3¾"	9'- 8"	-----	9'-11"	40	18	39.754	0.866	98.952	11'- 6"	6	11'- 2"	1	5	1.734	83.455	1.726	67.089	C
4	5	4	12"	3'- 6½"	0'- 4½"	1'-11½"	0'- 5⅞"	0'- 3¾"	9'- 8"	-----	9'-11"	40	24	41.872	0.940	105.216	11'- 6"	6	11'- 2"	1	6	1.833	86.907	1.819	67.089	E
4	6	4	12"	3'- 6½"	0'- 4½"	1'-11½"	0'- 5⅞"	0'- 3¾"	9'- 8"	-----	9'-11"	40	30	43.990	1.013	111.480	11'- 6"	6	11'- 2"	1	7	1.932	90.358	1.912	67.089	G
5	3	3	12"	4'- 4"	0'- 4⅜"	2'- 4⅛"	0'- 5⅞"	0'- 3⅞"	11'- 7⅞"	-----	11'-11"	48	12	44.316	0.891	99.200	13'- 6"	6	13'- 2"	1	4	1.837	92.020	1.843	79.105	A
5	4	3	12"	4'- 4"	0'- 4⅜"	2'- 4⅛"	0'- 5⅞"	0'- 3⅞"	11'- 7⅞"	-----	11'-11"	48	18	46.434	0.964	105.464	13'- 6"	6	13'- 2"	1	5	1.936	95.471	1.935	79.105	C
5	5	4	12"	4'- 4⅛"	0'- 4½"	2'- 4¼"	0'- 5⅞"	0'- 3¾"	11'- 8"	-----	11'-11"	48	24	48.552	1.037	118.687	13'- 6"	6	13'- 2"	1	6	2.035	98.923	2.028	79.105	E
5	6	4	12"	4'- 4⅛"	0'- 4½"	2'- 4¼"	0'- 5⅞"	0'- 3¾"	11'- 8"	-----	11'-11"	48	30	50.670	1.111	124.951	13'- 6"	6	13'- 2"	1	7	2.134	102.374	2.121	79.105	G
5	7	4	12"	4'- 4⅛"	0'- 4½"	2'- 4¼"	0'- 5⅞"	0'- 3¾"	11'- 8"	-----	11'-11"	48	36	52.788	1.185	131.215	13'- 6"	6	13'- 2"	1	8	2.233	105.825	2.214	79.105	I
6	4	4	12"	5'- 1¾"	0'- 4½"	2'- 9"	0'- 5⅞"	0'- 3¾"	13'- 8"	-----	13'-11"	56	18	53.114	1.061	129.872	15'- 6"	6	15'- 2"	1	5	2.138	107.487	2.144	91.121	C
6	5	4	12"	5'- 1¾"	0'- 4½"	2'- 9"	0'- 5⅞"	0'- 3¾"	13'- 8"	-----	13'-11"	56	24	55.232	1.135	136.324	15'- 6"	6	15'- 2"	1	6	2.237	110.939	2.237	91.121	E
6	6	4	12"	5'- 1¾"	0'- 4½"	2'- 9"	0'- 5⅞"	0'- 3¾"	13'- 8"	-----	13'-11"	56	30	57.350	1.208	142.777	15'- 6"	6	15'- 2"	1	7	2.336	114.390	2.330	91.121	G
6	7	4	12"	5'- 1¾"	0'- 4½"	2'- 9"	0'- 5⅞"	0'- 3¾"	13'- 8"	-----	13'-11"	56	36	59.468	1.282	149.229	15'- 6"	6	15'- 2"	1	8	2.435	117.841	2.423	91.121	I
6	8	4	12"	5'- 1¾"	0'- 4½"	2'- 9"	0'- 5⅞"	0'- 3¾"	13'- 8"	-----	13'-11"	56	42	61.586	1.355	164.914	15'- 6"	6	15'- 2"	1	9	2.534	121.293	2.515	91.121	K
7	4	4	12"	5'-11⅜"	0'- 4½"	3'- 1⅞"	0'- 5⅞"	0'- 3¾"	15'- 8⅛"	-----	15'-11"	64	18	59.794	1.158	152.712	17'- 6"	6	17'- 2"	1	5	2.341	119.503	2.353	103.137	C
7	6	4	12"	5'-11⅜"	0'- 4½"	3'- 1⅞"	0'- 5⅞"	0'- 3¾"	15'- 8⅛"	-----	15'-11"	64	30	64.030	1.305	172.209	17'- 6"	6	17'- 2"	1	7	2.539	126.406	2.539	103.137	G
7	8	4	12"	5'-11⅜"	0'- 4½"	3'- 1⅞"	0'- 5⅞"	0'- 3¾"	15'- 8⅛"	-----	15'-11"	64	42	68.266	1.452	186.929	17'- 6"	6	17'- 2"	1	9	2.736	133.309	2.724	103.137	K
7	10	4	11"	5'-11⅜"	0'- 4½"	3'- 1⅞"	0'- 5⅞"	0'- 3¾"	15'- 8⅛"	-----	15'-11"	64	54	72.502	1.598	218.493	17'- 6"	6	17'- 2"	1	11	2.934	140.211	2.910	103.137	O
8	4	4	10"	6'- 8¾"	0'- 4¾"	3'- 6⅜"	0'- 6¼"	0'- 4"	17'- 7⅞"	-----	17'-11"	72	18	66.474	1.282	189.026	19'- 6"	6	19'- 2"	1	5	2.534	131.519	2.553	115.153	C
8	6	4	10"	6'- 8⅝"	0'- 5"	3'- 6⅛"	0'- 6½"	0'- 4¼"	17'- 7⅞"	-----	17'-11"	72	30	70.710	1.457	200.594	19'- 6"	6	19'- 2"	1	7	2.723	138.422	2.730	115.153	G
8	8	4	9"	6'- 8½"	0'- 5¼"	3'- 5⅞"	0'- 6⅞"	0'- 4½"	17'- 7⅞"	-----	18'- 0"	72	42	74.946	1.631	230.003	19'- 6"	6	19'- 2"	1	9	2.912	145.325	2.906	115.153	K
8	10	4	10"	6'- 8⅜"	0'- 5½"	3'- 5⅝"	0'- 7¼"	0'- 4¾"	17'- 7⅞"	-----	18'- 0"	72	54	79.182	1.805	258.190	19'- 6"	6	19'- 2"	1	11	3.101	152.227	3.083	115.153	O
9	4	4	9"	7'- 5⅞"	0'- 5¾"	3'-10¼"	0'- 7⅝"	0'- 5"	19'- 8"	-----	20'- 0"	80	18	73.154	1.503	250.774	21'- 6"	6	21'- 2"	1	5	2.711	143.535	2.737	127.169	D
9	6	4	9"	7'- 5¾"	0'- 6"	3'-10"	0'- 8"	0'- 5¼"	19'- 8"	-----	20'- 0"	80	30	77.390	1.682	251.871	21'- 6"	6	21'- 2"	1	7	2.899	150.438	2.912	127.169	H
9	8	4	9"	7'- 5⅝"	0'- 6¼"	3'- 9¾"	0'- 8⅜"	0'- 5½"	19'- 8"	-----	20'- 1"	80	42	81.626	1.860	266.494	21'- 6"	6	21'- 2"	1	9	3.086	157.341	3.087	127.169	L
9	10	4	9"	7'- 5⅝"	0'- 6¼"	3'- 9¾"	0'- 8⅜"	0'- 5½"	19'- 8"	-----	20'- 1"	80	54	85.862	2.005	301.091	21'- 6"	6	21'- 2"	1	11	3.284	164.243	3.272	127.169	P
9	12	4	8"	7'- 5½"	0'- 6½"	3'- 9½"	0'- 8⅝"	0'- 5¾"	19'- 8"	-----	20'- 1"	80	66	90.098	2.179	363.528	21'- 6"	6	21'- 2"	1	13	3.471	171.146	3.447	127.169	T
10	4	4	8"	8'- 3⅛"	0'- 6½"	4'- 2¼"	0'- 8⅝"	0'- 5¾"	21'- 8"	-----	22'- 1"	88	18	79.834	1.715	295.784	23'- 6"	6	23'- 2"	1	5	2.870	155.551	2.902	139.185	D
10	6	5	9"	8'- 3"	0'- 6⅞"	4'- 2"	0'- 9⅛"	0'- 6"	21'- 8"	-----	22'- 1"	88	30	84.070	1.896	317.091	23'- 6"	6	23'- 2"	1	7	3.055	162.454	3.075	139.185	H
10	8	5	9"	8'- 2⅞"	0'- 7⅛"	4'- 1¾"	0'- 9½"	0'- 6¼"	21'- 8"	-----	22'- 1"	88	42	88.306	2.077	334.039	23'- 6"	6	23'- 2"	1	9	3.241	169.357	3.249	139.185	L
10	10	5	10"	8'- 2¾"	0'- 7⅜"	4'- 1½"	0'- 9⅞"	0'- 6½"	21'- 8"	-----	22'- 1"	88	54	92.542	2.258	344.909	23'- 6"	6	23'- 2"	1	11	3.427	176.259	3.422	139.185	P
10	12	5	10"	8'- 2¾"	0'- 7⅜"	4'- 1½"	0'- 9⅞"	0'- 6½"	21'- 8"	-----	22'- 1"	88	66	96.778	2.402	403.179	23'- 6"	6	23'- 2"	1	13	3.625	183.162	3.608	139.185	T
12	6	5	9"	9'- 9⅜"	0'- 8⅝"	4'- 9⅞"	0'-11⅝"	0'- 7¾"	25'- 8⅛"	-----	26'- 2"	104	30	97.430	2.423	407.615	27'- 6"	6	27'- 2"	1	7	3.326	186.486	3.359	163.217	H
12	8	5	9"	9'- 9¼"	0'- 8⅞"	4'- 9⅝"	1'- 0"	0'- 8"	25'- 8⅛"	-----	26'- 3"	104	42	101.666	2.610	420.889	27'- 6"	6	27'- 2"	1	9	3.509	193.389	3.530	163.217	L
12	10	5	9"	9'- 9⅛"	0'- 9⅛"	4'- 9⅜"	1'- ¼"	0'- 8¼"	25'- 8⅛"	-----	26'- 3"	104	54	105.902	2.797	434.886	27'- 6"	6	27'- 2"	1	11	3.691	200.291	3.700	163.217	P
12	12	5	9"	9'- 9⅛"	0'- 9⅛"	4'- 9⅜"	1'- ¼"	0'- 8¼"	25'- 8⅛"	-----	26'- 3"	104	66	110.138	2.938	531.734	27'- 6"	6	27'- 2"	1	13	3.889	207.194	3.885	163.217	T

A COPY OF THE ORIGINAL SEALED AND SIGNED DRAWING IS ON FILE IN THE CENTRAL OFFICE.

SPECIFICATION REFERENCE

DOUBLE BOX CULVERTS

5 TO 10 FT. FILLS

VIRGINIA DEPARTMENT OF TRANSPORTATION

VDOT

ROAD AND BRIDGE STANDARDS

REVISION DATE 07/11

SHEET 2 OF 2

1003.10

BCD-20

FOR TYPICAL SECTION, NOTES AND OTHER DETAILS, REFER TO STANDARD BCD-DT.

DIMENSIONS						REINFORCING STEEL																										
SPAN	HGHT	T1	T2	T3	T4							BH1			BH2			BH3				BH4					BV1			BV2		
(FT.)	(FT.)	TOP SLAB	BOTTOM SLAB	EXTERIOR WALL (IN.)	INTERIOR WALL (IN.)	A	B	C	D	E	F	SIZE	SPACING C-C	LENGTH	SIZE	SPACING C-C	LENGTH	SIZE	SPACING C-C	a	LENGTH	SIZE	SPACING C-C	a	b	LENGTH	SIZE	SPACING C-C	LENGTH	SIZE	SPACING C-C	LENGTH
3	3	8"	8"	8"	8"	6	6'- 0"	6	6'- 0"	1	1'- 0"	4	12"	6'- 7"	4	12"	7'- 8"	--	---	-----	-----	4	12"	2'- 4"	2'- 9"	4'- 9"	4	12"	4'- 0"	4	12"	4'- 0"
3	4	8"	8"	8"	8"	6	6'- 0"	6	6'- 0"	2	2'- 0"	4	12"	6'- 7"	4	12"	7'- 8"	--	---	-----	-----	4	12"	2'- 4"	3'- 3"	5'- 3"	4	12"	5'- 0"	4	12"	5'- 0"
4	3	8"	8"	8"	8"	8	8'- 0"	8	8'- 0"	1	1'- 0"	4	12"	8'- 7"	4	12"	9'- 8"	--	---	-----	-----	4	12"	2'- 4"	2'- 9"	4'- 9"	4	12"	4'- 0"	4	12"	4'- 0"
4	4	8"	8"	8"	8"	8	8'- 0"	8	8'- 0"	2	2'- 0"	4	12"	8'- 7"	4	12"	9'- 8"	--	---	-----	-----	4	12"	2'- 4"	3'- 3"	5'- 3"	4	12"	5'- 0"	4	12"	5'- 0"
4	5	8"	8"	8"	8"	8	8'- 0"	8	8'- 0"	3	3'- 0"	4	12"	8'- 7"	4	12"	9'- 8"	--	---	-----	-----	4	12"	2'- 4"	3'- 9"	5'- 9"	4	12"	6'- 0"	4	12"	6'- 0"
4	6	8"	8"	8"	8"	8	8'- 0"	8	8'- 0"	4	4'- 0"	4	12"	8'- 7"	4	12"	9'- 8"	--	---	-----	-----	4	12"	2'- 4"	4'- 3"	6'- 3"	4	12"	7'- 0"	4	12"	7'- 0"
5	3	8"	8"	8"	8"	10	10'- 0"	10	10'- 0"	1	1'- 0"	4	12"	10'- 7"	4	12"	11'- 8"	4	12"	2'- 6"	4'- 9"	4	12"	2'- 4"	2'- 9"	4'- 9"	4	12"	4'- 0"	4	12"	4'- 0"
5	4	8"	8"	8"	8"	10	10'- 0"	10	10'- 0"	2	2'- 0"	4	12"	10'- 7"	4	12"	11'- 8"	3	12"	2'- 6"	4'-10"	4	12"	2'- 4"	3'- 3"	5'- 3"	4	12"	5'- 0"	4	12"	5'- 0"
5	5	8"	8"	8"	8"	10	10'- 0"	10	10'- 0"	3	3'- 0"	4	12"	10'- 7"	4	12"	11'- 8"	3	12"	2'- 6"	4'-10"	4	12"	2'- 4"	3'- 9"	5'- 9"	4	12"	6'- 0"	4	12"	6'- 0"
5	6	8"	8"	8"	8"	10	10'- 0"	10	10'- 0"	4	4'- 0"	4	12"	10'- 7"	4	12"	11'- 8"	3	12"	2'- 9"	5'-3"	4	12"	2'- 4"	4'- 3"	6'- 3"	4	12"	7'- 0"	4	12"	7'- 0"
5	7	8"	8"	8"	8"	10	10'- 0"	10	10'- 0"	5	5'- 0"	4	12"	10'- 7"	4	12"	11'- 8"	4	12"	2'- 11"	5'- 7"	4	12"	2'- 4"	4'- 9"	6'- 9"	5	12"	8'- 0"	4	12"	8'- 0"
6	4	9¼"	9¼"	8"	8"	12	12'- 0"	12	12'- 0"	2	2'- 0"	4	12"	12'- 7"	4	12"	13'- 8"	4	12"	2'- 9"	5'- 2"	4	12"	2'- 4"	3'- 4"	5'- 4"	4	12"	5'- 2"	4	12"	5'- 2"
6	5	9½"	9½"	8"	8"	12	12'- 0"	12	12'- 0"	3	3'- 0"	4	12"	12'- 7"	4	12"	13'- 8"	4	12"	2'- 9"	5'- 2"	4	12"	2'- 4"	3'- 10"	5'- 10"	4	12"	6'- 3"	4	12"	6'- 3"
6	6	9½"	9½"	8"	8"	12	12'- 0"	12	12'- 0"	4	4'- 0"	4	12"	12'- 7"	4	12"	13'- 8"	4	12"	2'- 10"	5'- 5"	4	12"	2'- 4"	4'- 4"	6'- 4"	4	12"	7'- 3"	4	12"	7'- 3"
6	7	9½"	9½"	8"	8"	12	12'- 0"	12	12'- 0"	5	5'- 0"	4	12"	12'- 7"	4	12"	13'- 8"	4	12"	3'- 1"	5'- 10"	4	12"	2'- 4"	4'- 10"	6'- 10"	5	12"	8'- 3"	4	12"	8'- 3"
6	8	9¾"	9¾"	8"	8"	12	12'- 0"	12	12'- 0"	6	6'- 0"	4	12"	12'- 7"	4	12"	13'- 8"	4	12"	3'- 3"	6'- 3"	4	12"	2'- 4"	5'- 4"	7'- 5"	5	12"	9'- 3"	4	12"	9'- 3"
7	4	10½"	10½"	8"	8"	14	14'- 0"	14	14'- 0"	2	2'- 0"	4	10"	14'- 7"	4	10"	15'- 8"	3	10"	2'- 11"	5'- 8"	4	10"	2'- 4"	3'- 5"	5'- 5"	4	12"	5'- 5"	4	12"	5'- 5"
7	6	10¾"	10¾"	8"	8"	14	14'- 0"	14	14'- 0"	4	4'- 0"	4	10"	14'- 7"	4	10"	15'- 8"	--	---	-----	-----	4	10"	2'- 4"	4'- 5"	6'- 6"	4	12"	7'- 5"	4	12"	7'- 5"
7	8	11"	11"	8"	8"	14	14'- 0"	14	14'- 0"	6	6'- 0"	4	10"	14'- 7"	4	10"	15'- 8"	3	10"	3'- 5"	6'- 7"	4	10"	2'- 4"	5'- 6"	7'- 6"	5	12"	9'- 6"	4	12"	9'- 6"
7	10	11¼"	11¼"	8"	8"	14	14'- 0"	14	14'- 0"	8	8'- 0"	4	10"	14'- 4"	4	10"	15'- 8"	3	10"	3'-10"	7'- 5"	5	10"	2'- 6"	6'- 8"	8'- 9"	6	10½"	11'- 6"	4	12"	11'- 6"
8	4	11¾"	11¾"	8"	8"	16	16'- 0"	16	16'- 0"	2	2'- 0"	5	9"	16'- 7"	4	9"	17'- 8"	3	9"	3'- 2"	6'- 1"	4	9"	2'- 9"	3'- 6"	6'- 0"	4	12"	5'- 7"	4	12"	5'- 7"
8	6	12"	12"	8"	8"	16	16'- 0"	16	16'- 0"	4	4'- 0"	5	9"	16'- 7"	4	9"	17'- 8"	--	---	-----	-----	4	9"	2'- 9"	4'- 6"	7'- 0"	4	12"	7'- 8"	4	12"	7'- 8"
8	8	12¼"	12¼"	8"	8"	16	16'- 0"	16	16'- 0"	6	6'- 0"	5	9"	16'- 7"	4	9"	17'- 8"	3	9"	3'- 6"	6'- 9"	4	9"	2'- 9"	5'- 7"	8'- 0"	5	12"	9'- 8"	4	12"	9'- 8"
8	10	12½"	12½"	8"	8"	16	16'- 0"	16	16'- 0"	8	8'- 0"	5	9"	16'- 7"	4	9"	17'- 8"	4	9"	3'- 11"	7'- 6"	4	9"	2'- 9"	6'- 7"	9'- 0"	5	7"	11'- 9"	4	12"	11'- 9"
9	4	13"	13"	8"	8"	18	18'- 0"	18	18'- 0"	2	2'- 0"	5	9"	18'- 7"	5	9"	19'- 8"	3	9"	3'- 4"	6'- 5"	4	9"	2'- 9"	3'- 7"	6'- 1"	4	11½"	5'- 9"	4	12"	5'- 9"
9	6	13¼"	13¼"	8"	8"	18	18'- 0"	18	18'- 0"	4	4'- 0"	5	9"	18'- 7"	5	9"	19'- 8"	--	---	-----	-----	4	9"	2'- 9"	4'- 8"	7'- 1"	4	12"	7'-10"	4	12"	7'-10"
9	8	13¼"	13¼"	8"	8"	18	18'- 0"	18	18'- 0"	6	6'- 0"	5	9"	18'- 7"	5	9"	19'- 8"	3	9"	3'- 7"	6'- 11"	4	9"	2'- 9"	5'- 8"	8'- 1"	5	12"	9'-10"	4	12"	9'-10"
9	10	13½"	13½"	8"	8"	18	18'- 0"	18	18'- 0"	8	8'- 0"	5	9"	18'- 4"	5	9"	19'- 8"	3	9"	4'- 0"	7'- 9"	5	9"	2'- 11"	6'- 10"	9'- 4"	5	7½"	11'-11"	4	12"	11'-11"
9	12	13¾"	13¾"	9½"	8"	18	18'- 0"	18	18'- 0"	10	10'- 0"	5	9"	18'- 4"	5	9"	19'- 11"	3	9"	4'- 5"	8'- 7"	6	9"	3'- 0"	8'- 0"	10'- 7"	5	4½"	13'-11"	4	12"	13'-11"
10	4	14½"	14½"	8"	8"	20	20'- 0"	20	20'- 0"	2	2'- 0"	6	9"	20'- 7"	5	9"	21'- 8"	3	9"	3'- 6"	6'-10"	4	9"	3'- 2"	3'- 9"	6'- 7"	4	11½"	6'- 0"	4	12"	6'- 0"
10	6	15"	15"	8"	8"	20	20'- 0"	20	20'- 0"	4	4'- 0"	6	9"	20'- 7"	5	9"	21'- 8"	3	9"	3'- 6"	6'-10"	4	9"	3'- 2"	4'- 9"	7'- 8"	4	12"	8'- 2"	4	12"	8'- 2"
10	8	14¾"	14¾"	8"	8"	20	20'- 0"	20	20'- 0"	6	6'- 0"	6	9"	20'- 7"	5	9"	21'- 8"	3	9"	3'- 8"	7'- 2"	4	9"	3'- 2"	5'- 9"	8'- 8"	5	12"	10'- 1"	4	12"	10'- 1"
10	10	15"	15"	8"	8"	20	20'- 0"	20	20'- 0"	8	8'- 0"	6	9"	20'- 4"	5	9"	21'- 8"	3	9"	4'- 1"	8'- 0"	5	9"	3'- 4"	7'- 0"	9'- 11"	5	7½"	12'- 2"	4	12"	12'- 2"
10	12	15"	15"	9½"	8"	20	20'- 0"	20	20'- 0"	10	10'- 0"	6	9"	20'- 4"	5	9"	21'- 11"	3	9"	4'- 6"	8'- 10"	6	9"	3'- 5"	8'- 1"	11'- 1"	5	4½"	14'- 2"	4	12"	14'- 2"
12	6	17¾"	17¾"	8"	8"	24	24'- 0"	24	24'- 0"	4	4'- 0"	6	8"	24'- 7"	5	8"	25'- 8"	--	---	-----	-----	4	8"	3'- 2"	5'- 0"	7'- 11"	4	12"	8'- 7"	4	12"	8'- 7"
12	8	17¾"	17¾"	8"	8"	24	24'- 0"	24	24'- 0"	6	6'- 0"	6	8"	24'- 7"	5	8"	25'- 8"	--	---	-----	-----	4	8"	3'- 2"	6'- 0"	8'- 11"	5	12"	10'- 7"	4	12"	10'- 7"
12	10	18"	18"	8"	8"	24	24'- 0"	24	24'- 0"	8	8'- 0"	6	8"	24'- 7"	5	8"	25'- 8"	4	8"	4'- 4"	8'- 5"	4	8"	3'- 2"	7'- 0"	9'- 11"	5	7"	12'- 8"	4	12"	12'- 8"
12	12	18"	18"	9½"	8"	24	24'- 0"	24	24'- 0"	10	10'- 0"	6	8"	24'- 7"	5	8"	25'- 11"	4	8"	4'- 9"	9'- 3"	5	8"	3'- 4"	8'- 3"	11'- 2"	5	4½"	14'- 8"	4	11½"	14'- 8"

A COPY OF THE ORIGINAL SEALED AND SIGNED DRAWING IS ON FILE IN THE CENTRAL OFFICE.

VDOT
ROAD AND BRIDGE STANDARDS

SHEET 1 OF 2 | REVISION DATE
1003.11 | 07/11

DOUBLE BOX CULVERTS

10 TO 20 FT. FILLS

VIRGINIA DEPARTMENT OF TRANSPORTATION

SPECIFICATION REFERENCE

BCD-20

FOR TYPICAL SECTION, NOTES AND OTHER DETAILS, REFER TO STANDARD BCD-DT.

SPAN (FT.)	HGHT (FT.)	REINFORCING STEEL BT1 SIZE	SPACING c-c	a	b	c	d	e	f	g	LENGTH	NO. BL1 #4 BARS	NO. BL2 #3 BARS	REINFORCING STEEL (LBS/LONG. JT)	QUAN./LF CONCRETE CLASS A4 (CY/LF)	REINFORCING STEEL (LBS/LF)	HEADWALLS G HEADWALL LENGTH	HW1 SIZE	HW1 LENGTH	NO. HW2 BARS	NO. HW3 BARS	INLET CONCRETE CL. A4 (CY)	INLET REINFORCING STEEL (LBS)	OUTLET CONCRETE CL. A4 (CY)	OUTLET REINFORCING STEEL (LBS)	WINGWALL
3	3	4	12"	2'- 7"	0'- 4"	1'- 10"	0'- 5 1/8"	0'- 3 1/4"	7'- 8"	-----	7'-10"	32	12	30.956	0.695	78.691	9'- 6"	6	9'- 2"	1	4	1.433	67.988	1.425	55.073	A
3	4	4	12"	2'- 7"	0'- 4"	1'- 10"	0'- 5 1/8"	0'- 3 1/4"	7'- 8"	-----	7'-10"	32	18	33.065	0.768	84.955	9'- 6"	6	9'- 2"	1	5	1.531	71.439	1.517	55.073	C
4	3	4	12"	3'- 5"	0'- 4"	2'- 3"	0'- 5 1/8"	0'- 3 1/4"	9'- 8"	-----	9'-10"	40	12	37.636	0.792	92.051	11'- 6"	6	11'- 2"	1	4	1.635	80.004	1.634	67.089	A
4	4	4	12"	3'- 5"	0'- 4"	2'- 3"	0'- 5 1/8"	0'- 3 1/4"	9'- 8"	-----	9'-10"	40	18	39.745	0.866	98.315	11'- 6"	6	11'- 2"	1	5	1.734	83.455	1.726	67.089	C
4	5	4	12"	3'- 5"	0'- 4"	2'- 3"	0'- 5 1/8"	0'- 3 1/4"	9'- 8"	-----	9'-10"	40	24	41.860	0.940	104.579	11'- 6"	6	11'- 2"	1	6	1.833	86.907	1.819	67.089	E
4	6	4	12"	3'- 5"	0'- 4"	2'- 3"	0'- 5 1/8"	0'- 3 1/4"	9'- 8"	-----	9'-10"	40	30	43.975	1.013	110.843	11'- 6"	6	11'- 2"	1	7	1.932	90.358	1.912	67.089	G
5	3	4	12"	4'- 2"	0'- 4"	2'- 8"	0'- 5 1/8"	0'- 3 1/4"	11'- 8"	-----	11'-10"	48	12	44.310	0.891	98.023	13'- 6"	6	13'- 2"	1	4	1.837	92.020	1.843	79.105	A
5	4	4	12"	4'- 2"	0'- 4"	2'- 8"	0'- 5 1/8"	0'- 3 1/4"	11'- 8"	-----	11'-10"	48	18	46.425	0.965	98.856	13'- 6"	6	13'- 2"	1	5	1.936	95.471	1.935	79.105	C
5	5	4	12"	4'- 2"	0'- 4"	2'- 8"	0'- 5 1/8"	0'- 3 1/4"	11'- 8"	-----	11'-10"	48	24	48.540	1.038	105.120	13'- 6"	6	13'- 2"	1	6	2.035	98.923	2.028	79.105	E
5	6	4	12"	4'- 2"	0'- 4"	2'- 8"	0'- 5 1/8"	0'- 3 1/4"	11'- 8"	-----	11'-10"	48	30	50.655	1.112	111.986	13'- 6"	6	13'- 2"	1	7	2.134	102.374	2.121	79.105	G
5	7	4	12"	4'- 2"	0'- 4"	2'- 8"	0'- 5 1/8"	0'- 3 1/4"	11'- 8"	-----	11'-10"	48	36	52.770	1.185	131.216	13'- 6"	6	13'- 2"	1	8	2.233	105.825	2.214	79.105	I
6	4	4	12"	4'- 11"	0'- 5 1/4"	3'- 0"	0'- 7"	0'- 4 1/2"	13'- 8"	-----	13'-11"	56	18	53.105	1.168	139.704	15'- 6"	6	15'- 2"	1	5	2.127	107.487	2.133	91.121	D
6	5	4	12"	4'- 11"	0'- 5 1/2"	3'- 0"	0'- 7 1/4"	0'- 4 3/4"	13'- 8"	-----	13'-11"	56	24	55.220	1.264	146.158	15'- 6"	6	15'- 2"	1	6	2.220	110.939	2.220	91.121	F
6	6	4	12"	4'- 11"	0'- 5 1/2"	3'- 0"	0'- 7 1/4"	0'- 4 3/4"	13'- 8"	-----	13'-11"	56	30	57.335	1.337	153.090	15'- 6"	6	15'- 2"	1	7	2.319	114.390	2.313	91.121	H
6	7	4	12"	4'- 11"	0'- 5 1/2"	3'- 0"	0'- 7 1/4"	0'- 4 3/4"	13'- 8"	-----	13'-11"	56	36	59.450	1.410	166.611	15'- 6"	6	15'- 2"	1	8	2.418	117.841	2.406	91.121	J
6	8	4	12"	4'- 10"	0'- 5 3/4"	3'- 0"	0'- 7 5/8"	0'- 5"	13'- 8"	-----	14'- 0"	56	42	61.586	1.505	175.026	15'- 6"	6	15'- 2"	1	9	2.511	121.293	2.492	91.121	L
7	4	4	10"	5'- 7"	0'- 6 1/2"	3'- 5"	0'- 8 3/4"	0'- 5 3/4"	15'- 8"	-----	16'- 0"	64	18	59.785	1.404	165.663	17'- 6"	6	17'- 2"	1	5	2.285	119.503	2.297	103.137	D
7	6	4	10"	5'- 7"	0'- 6 3/4"	3'- 5"	0'- 9"	0'- 6"	15'- 8"	-----	16'- 0"	64	30	64.015	1.577	168.822	17'- 6"	6	17'- 2"	1	7	2.475	126.406	2.475	103.137	H
7	8	4	10"	5'- 7"	0'- 7"	3'- 5"	0'- 9 3/8"	0'- 6 1/4"	15'- 8"	-----	16'- 1"	64	42	68.245	1.747	200.948	17'- 6"	6	17'- 2"	1	9	2.666	133.309	2.653	103.137	L
7	10	4	10"	5'- 6"	0'- 7 1/4"	3'- 5"	0'- 9 3/4"	0'- 6 1/2"	15'- 8"	-----	16'- 1"	64	54	72.475	1.916	248.796	17'- 6"	6	17'- 2"	1	11	2.856	140.211	2.831	103.137	P
8	4	4	9"	6'- 3"	0'- 7 3/4"	3'- 10"	0'-10 1/2"	0'- 7"	17'- 8"	-----	18'- 1"	72	18	66.465	1.669	212.942	19'- 6"	6	19'- 2"	1	5	2.427	131.519	2.446	115.153	D
8	6	4	9"	6'- 3"	0'- 8"	3'- 10"	0'-10 7/8"	0'- 7 1/4"	17'- 8"	-----	18'- 1"	72	30	70.695	1.845	214.543	19'- 6"	6	19'- 2"	1	7	2.616	138.422	2.622	115.153	H
8	8	4	9"	6'- 3"	0'- 8 1/4"	3'- 10"	0'-11 1/8"	0'- 7 1/2"	17'- 8"	-----	18'- 2"	72	42	74.925	2.018	248.913	19'- 6"	6	19'- 2"	1	9	2.804	145.325	2.799	115.153	L
8	10	4	9"	6'- 3"	0'- 8 1/2"	3'- 10"	0'-11 1/2"	0'- 7 3/4"	17'- 8"	-----	18'- 2"	72	54	79.155	2.191	294.798	19'- 6"	6	19'- 2"	1	11	2.993	152.227	2.975	115.153	P
9	4	5	9"	7'- 0"	0'- 9"	4'- 3"	1'- 1/8"	0'- 8 1/8"	19'- 8"	-----	20'- 2"	80	18	73.145	1.964	273.054	21'- 6"	6	21'- 2"	1	5	2.553	143.535	2.579	127.169	D
9	6	5	9"	7'- 0"	0'- 9 1/4"	4'- 3"	1'- 1/2"	0'- 8 3/8"	19'- 8"	-----	20'- 2"	80	30	77.375	2.143	273.531	21'- 6"	6	21'- 2"	1	7	2.740	150.438	2.754	127.169	H
9	8	5	9"	7'- 0"	0'- 9 1/4"	4'- 3"	1'- 1/2"	0'- 8 3/8"	19'- 8"	-----	20'- 2"	80	42	81.605	2.288	308.145	21'- 6"	6	21'- 2"	1	9	2.938	157.341	2.939	127.169	L
9	10	5	9"	6'- 11"	0'- 9 1/2"	4'- 3"	1'- 7/8"	0'- 8 5/8"	19'- 8"	-----	20'- 3"	80	54	85.835	2.464	358.625	21'- 6"	6	21'- 2"	1	11	3.126	164.243	3.114	127.169	P
9	12	5	9"	7'- 1"	0'- 9 3/4"	4'- 3"	1'- 1 1/8"	0'- 8 7/8"	19'- 11"	-----	20'- 6"	80	66	90.065	2.769	439.648	21'- 6"	6	21'- 2"	1	13	3.313	171.146	3.289	127.169	T
10	4	5	9"	7'- 8"	0'-10 1/2"	4'- 8"	1'- 2 1/4"	0'- 9 5/8"	21'- 8"	-----	22'- 3"	88	18	79.825	2.324	323.981	23'- 6"	6	23'- 2"	1	5	2.652	155.551	2.685	139.185	D
10	6	5	9"	7'- 7"	0'-11"	4'- 8"	1'- 3"	0'-10 1/8"	21'- 8"	-----	22'- 4"	88	30	84.055	2.539	337.513	23'- 6"	6	23'- 2"	1	7	2.850	162.454	2.870	139.185	H
10	8	5	9"	7'- 8"	0'-10 3/4"	4'- 8"	1'- 2 5/8"	0'- 9 7/8"	21'- 8"	-----	22'- 4"	88	42	88.285	2.652	358.944	23'- 6"	6	23'- 2"	1	9	3.036	169.357	3.043	139.185	L
10	10	5	9"	7'- 7"	0'-11"	4'- 8"	1'- 3"	0'-10 1/8"	21'- 8"	-----	22'- 4"	88	54	92.515	2.830	410.490	23'- 6"	6	23'- 2"	1	11	3.221	176.259	3.217	139.185	P
10	12	5	9"	7'- 9"	0'-11"	4'- 8"	1'- 3"	0'-10 1/8"	21'- 11"	-----	22'- 7"	88	66	96.745	3.106	492.783	23'- 6"	6	23'- 2"	1	13	3.419	183.162	3.402	139.185	T
12	6	6	8"	9'- 0"	1'- 1 3/4"	5'- 5"	1'- 6 3/4"	1'- 3/4"	25'- 8"	-----	26'- 6"	104	30	97.415	3.343	445.840	27'- 6"	6	27'- 2"	1	7	2.996	186.486	3.029	163.217	I
12	8	6	8"	9'- 0"	1'- 1 3/4"	5'- 5"	1'- 6 3/4"	1'- 3/4"	25'- 8"	-----	26'- 6"	104	42	101.645	3.489	467.673	27'- 6"	6	27'- 2"	1	9	3.194	193.389	3.215	163.217	M
12	10	6	8"	9'- 0"	1'- 2"	5'- 5"	1'- 7 1/8"	1'- 1"	25'- 8"	-----	26'- 6"	104	54	105.875	3.672	535.887	27'- 6"	6	27'- 2"	1	11	3.376	200.291	3.385	163.217	Q
12	12	6	8"	9'- 2"	1'- 2"	5'- 5"	1'- 7 1/8"	1'- 1"	25'-11"	-----	26'- 9"	104	66	110.105	3.954	615.152	27'- 6"	6	27'- 2"	1	13	3.574	207.194	3.570	163.217	U

A COPY OF THE ORIGINAL SEALED AND SIGNED DRAWING IS ON FILE IN THE CENTRAL OFFICE.

SPECIFICATION REFERENCE

DOUBLE BOX CULVERTS

10 TO 20 FT. FILLS

VIRGINIA DEPARTMENT OF TRANSPORTATION

VDOT

ROAD AND BRIDGE STANDARDS

REVISION DATE 08/14

SHEET 2 OF 2

1003.12

BCD-30

FOR TYPICAL SECTION, NOTES AND OTHER DETAILS, REFER TO STANDARD BCD-DT.

DIMENSIONS						REINFORCING STEEL																										
SPAN	HGHT	T1	T2	T3	T4							BH1			BH2			BH3				BH4					BV1			BV2		
(FT.)	(FT.)	TOP SLAB	BOTTOM SLAB	EXTERIOR WALL (IN.)	INTERIOR WALL (IN.)	A	B	C	D	E	F	SIZE	SPACING C-C	LENGTH	SIZE	SPACING C-C	LENGTH	SIZE	SPACING C-C	a	LENGTH	SIZE	SPACING C-C	a	b	LENGTH	SIZE	SPACING C-C	LENGTH	SIZE	SPACING C-C	LENGTH
3	3	8"	8"	8"	8"	6	6'- 0"	6	6'- 0"	1	1'- 0"	4	12"	6'- 7"	4	12"	7'- 8"	--	---	-----	-----	4	12"	2'- 4"	2'- 9"	4'- 9"	4	12"	4'- 0"	4	12"	4'- 0"
3	4	8"	8"	8"	8"	6	6'- 0"	6	6'- 0"	2	2'- 0"	4	12"	6'- 7"	4	12"	7'- 8"	--	---	-----	-----	4	12"	2'- 4"	3'- 3"	5'- 3"	4	12"	5'- 0"	4	12"	5'- 0"
4	3	8½"	8½"	8"	8"	8	8'- 0"	8	8'- 0"	1	1'- 0"	4	12"	8'- 7"	4	12"	9'- 8"	--	---	-----	-----	4	12"	2'- 4"	2'- 9"	4'- 9"	4	12"	4'- 0"	4	12"	4'- 0"
4	4	8½"	8½"	8"	8"	8	8'- 0"	8	8'- 0"	2	2'- 0"	4	12"	8'- 7"	4	12"	9'- 8"	--	---	-----	-----	4	12"	2'- 4"	3'- 3"	5'- 3"	4	12"	5'- 0"	4	12"	5'- 0"
4	5	8¾"	8¾"	8"	8"	8	8'- 0"	8	8'- 0"	3	3'- 0"	4	12"	8'- 7"	4	12"	9'- 8"	--	---	-----	-----	4	12"	2'- 4"	3'- 9"	5'- 10"	4	12"	6'- 1"	4	12"	6'- 1"
4	6	8¾"	8¾"	8"	8"	8	8'- 0"	8	8'- 0"	4	4'- 0"	4	12"	8'- 7"	4	12"	9'- 8"	--	---	-----	-----	4	12"	2'- 4"	4'- 3"	6'- 4"	5	12"	7'- 1"	4	12"	7'- 1"
5	3	10¼"	10¼"	8"	8"	10	10'- 0"	10	10'- 0"	1	1'- 0"	4	12"	10'- 7"	4	12"	11'- 8"	--	---	-----	-----	4	12"	2'- 4"	2'- 11"	4'- 11"	4	12"	4'- 4"	4	12"	4'- 4"
5	4	10¼"	10¼"	8"	8"	10	10'- 0"	10	10'- 0"	2	2'- 0"	4	12"	10'- 7"	4	12"	11'- 8"	--	---	-----	-----	4	12"	2'- 4"	3'- 5"	5'- 5"	4	12"	5'- 4"	4	12"	5'- 4"
5	5	10¼"	10¼"	8"	8"	10	10'- 0"	10	10'- 0"	3	3'- 0"	4	12"	10'- 7"	4	12"	11'- 8"	--	---	-----	-----	4	12"	2'- 4"	3'- 11"	5'- 11"	4	12"	6'- 4"	4	12"	6'- 4"
5	6	10¼"	10¼"	8"	8"	10	10'- 0"	10	10'- 0"	4	4'- 0"	4	12"	10'- 7"	4	12"	11'- 8"	3	12"	2'- 11"	5'- 7"	4	12"	2'- 4"	4'- 5"	6'- 5"	5	12"	7'- 4"	4	12"	7'- 4"
5	7	10¼"	10¼"	8"	8"	10	10'- 0"	10	10'- 0"	5	5'- 0"	4	12"	10'- 7"	4	12"	11'- 8"	4	12"	3'- 2"	5'- 11"	4	12"	2'- 4"	4'- 11"	6'- 11"	5	12"	8'- 4"	4	12"	8'- 4"
6	4	12¼"	12¼"	8"	8"	12	12'- 0"	12	12'- 0"	2	2'- 0"	4	11"	12'- 7"	4	11"	13'- 8"	--	---	-----	-----	4	11"	2'- 4"	3'- 7"	5'- 7"	4	12"	5'- 8"	4	12"	5'- 8"
6	5	12¼"	12¼"	8"	8"	12	12'- 0"	12	12'- 0"	3	3'- 0"	4	11"	12'- 7"	4	11"	13'- 8"	--	---	-----	-----	4	11"	2'- 4"	4'- 1"	6'- 1"	4	12"	6'- 8"	4	12"	6'- 8"
6	6	12"	12"	8"	8"	12	12'- 0"	12	12'- 0"	4	4'- 0"	4	11"	12'- 7"	4	11"	13'- 8"	3	11"	3'- 1"	5'- 11"	4	11"	2'- 4"	4'- 6"	6'- 7"	4	12"	7'- 8"	4	12"	7'- 8"
6	7	12"	12"	8"	8"	12	12'- 0"	12	12'- 0"	5	5'- 0"	4	10"	12'- 7"	4	10"	13'- 8"	3	10"	3'- 3"	6'- 4"	4	10"	2'- 4"	5'- 0"	7'- 1"	5	12"	8'- 8"	4	12"	8'- 8"
6	8	12"	12"	8"	8"	12	12'- 0"	12	12'- 0"	6	6'- 0"	4	10"	12'- 4"	4	10"	13'- 8"	--	---	-----	-----	5	10"	2'- 6"	5'- 9"	7'- 10"	5	8"	9'- 8"	4	12"	9'- 8"
7	4	13¾"	13¾"	8"	8"	14	14'- 0"	14	14'- 0"	2	2'- 0"	5	9"	14'- 7"	4	9"	15'- 8"	--	---	-----	-----	4	9"	2'- 9"	3'- 8"	6'- 2"	4	12"	5'- 11"	4	12"	5'- 11"
7	6	13¾"	13¾"	8"	8"	14	14'- 0"	14	14'- 0"	4	4'- 0"	5	9"	14'- 7"	4	9"	15'- 8"	--	---	-----	-----	4	9"	2'- 9"	4'- 8"	7'- 2"	4	12"	7'- 11"	4	12"	7'- 11"
7	8	13¾"	13¾"	8"	8"	14	14'- 0"	14	14'- 0"	6	6'- 0"	5	9"	14'- 7"	4	9"	15'- 8"	3	9"	3'- 7"	7'- 0"	4	9"	2'- 9"	5'- 8"	8'- 2"	5	8½"	9'- 11"	4	12"	9'- 11"
7	10	13¾"	13¾"	9½"	8"	14	14'- 0"	14	14'- 0"	8	8'- 0"	5	9"	14'- 7"	4	9"	15'- 11"	3	9"	4'- 0"	7'-10"	5	9"	2'- 11"	6'- 10"	9'- 4"	5	5"	11'- 11"	4	12"	11'- 11"
8	4	15½"	15½"	8"	8"	16	16'- 0"	16	16'- 0"	2	2'- 0"	5	8"	16' -7"	4	8"	17'- 8"	--	---	-----	-----	4	8"	2'- 9"	3'-10"	6'- 3"	4	12"	6'- 3"	4	12"	6'- 3"
8	6	15½"	15½"	8"	8"	16	16'- 0"	16	16'- 0"	4	4'- 0"	5	8"	16'- 7"	4	8"	17'- 8"	--	---	-----	-----	4	8"	2'- 9"	4'-10"	7'- 3"	4	12"	8'- 3"	4	12"	8'- 3"
8	8	15½"	15½"	8"	8"	16	16'- 0"	16	16'- 0"	6	6'- 0"	5	8"	16'- 7"	4	8"	17'- 8"	3	8"	3'- 9"	7'- 4"	4	8"	2'- 9"	5'-10"	8'- 3"	5	8½"	10'- 3"	4	12"	10'- 3"
8	10	15½"	15½"	9"	8"	16	16'- 0"	16	16'- 0"	8	8'- 0"	5	8"	16'- 6"	4	8"	17'- 9"	3	8"	4'- 2"	8'- 1"	5	8"	2'- 11"	7'- 0"	9'- 6"	5	5"	12'- 3"	4	12"	12'- 3"
9	4	17¼"	17¼"	8"	8"	18	18'- 0"	18	18'- 0"	2	2'- 0"	6	9"	18'- 7"	5	9"	19'- 8"	--	---	-----	-----	4	9"	3'- 2"	4'- 0"	6'- 10"	4	12"	6'- 6"	4	11"	6'- 6"
9	6	17¼"	17¼"	8"	8"	18	18'- 0"	18	18'- 0"	4	4'- 0"	6	9"	18'- 7"	5	9"	19'- 8"	--	---	-----	-----	4	9"	3'- 2"	5'- 0"	7'- 10"	4	12"	8'- 6"	4	11"	8'- 6"
9	8	17½"	17½"	8"	8"	18	18'- 0"	18	18'- 0"	6	6'- 0"	6	9"	18"- 7"	5	9"	19'- 8"	3	9"	3'- 11"	7'- 8"	4	9"	3'- 2"	6'- 0"	8'- 10"	5	8"	10'- 6"	4	11"	10'- 6"
9	10	17½"	17½"	9"	8"	18	18'- 0"	18	18'- 0"	8	8'- 0"	6	9"	18'- 9"	5	9"	19'- 9"	4	9"	4'- 4"	8'- 4"	4	9"	3'- 2"	7'- 0"	9'- 10"	6	7½"	12'- 6"	4	11"	12'- 6"
9	12	17½"	17½"	11"	8"	18	18'- 0"	18	18'- 0"	10	10'- 0"	6	9"	18'- 7"	5	9"	20'- 2"	3	9"	4'- 9"	9'- 3"	6	9"	3'- 5"	8'- 4"	11'- 4"	5	5½"	14'- 6"	4	11"	14'- 6"
10	4	19"	19"	8"	8"	20	20'- 0"	20	20'- 0"	2	2'- 0"	6	8"	20'- 7"	4	8"	21'- 8"	--	---	-----	-----	4	8"	2'- 9"	4'- 1"	6'- 7"	4	12"	6'- 9"	4	10"	6'- 9"
10	6	18¾"	18¾"	8"	8"	20	20'- 0"	20	20'- 0"	4	4'- 0"	6	9"	20'- 7'	5	9"	21'- 8"	--	---	-----	-----	4	9"	3'- 2"	5'- 1"	8'- 0"	4	12"	8'- 9"	4	10"	8'- 9"
10	8	18¾"	18¾"	8"	8"	20	20'- 0"	20	20'- 0"	6	6'- 0"	6	9"	20'- 7"	5	9"	21'- 8"	3	9"	4'- 0"	7'-10"	4	9"	3'- 2"	6'- 1"	9'- 0"	5	8½"	10'- 9"	4	10"	10'- 9"
10	10	19"	19"	9"	8"	20	20'- 0"	20	20'- 0"	8	8'- 0"	6	9"	20'- 6"	5	9"	21'- 9"	3	9"	4'- 6"	8'- 8"	5	9"	3'- 4"	7'- 3"	10'- 3"	6	7½"	12'- 9"	4	10"	12'- 9"
10	12	19¼"	19¼"	11"	8"	20	20'- 0"	20	20'- 0"	10	10'- 0"	6	9"	20'- 7"	5	9"	22'- 2"	3	9"	4'- 11"	9'- 6"	6	9"	3'- 5"	8'- 6"	11'- 6"	7	10½"	14'-10"	4	10"	14'-10"
12	6	22¼"	22¼"	8"	8"	24	24'- 0"	24	24'- 0"	4	4'- 0"	7	9"	24' -7"	6	9"	25'- 8"	--	---	-----	-----	4	9"	3'-10"	5'- 5"	8'- 11"	4	12"	9'- 4"	4	10"	9'- 4"
12	8	22¼"	22¼"	8"	8"	24	24'- 0"	24	24'- 0"	6	6'- 0"	7	9"	24'- 7"	6	9"	25'- 8"	3	9"	4'- 4"	8'- 5"	4	9"	3'-10"	6'- 5"	9' -11"	5	8"	11'- 4"	4	10"	11'- 4"
12	10	22¼"	22¼"	8½"	8"	24	24'- 0"	24	24'- 0"	8	8'- 0"	7	9"	24'- 5"	6	9"	25'- 9"	3	9"	4'- 9"	9'- 3"	5	9"	4'- 0"	7'- 7"	11'- 2"	6	7½"	13'- 4"	4	10"	13'- 4"
12	12	22½"	22½"	11"	8"	24	24'- 0"	24	24'- 0"	10	10'- 0"	7	9"	24'- 7"	6	9"	26'- 2"	3	9"	5'- 2"	10'- 1"	6	9"	4'- 1"	8'- 9"	12'- 5"	6	7½"	15'- 5"	4	10"	15'- 5"

A COPY OF THE ORIGINAL SEALED AND SIGNED DRAWING IS ON FILE IN THE CENTRAL OFFICE.

VDOT
ROAD AND BRIDGE STANDARDS

SHEET 1 OF 2 | REVISION DATE
1003.13 | 07/11

DOUBLE BOX CULVERTS

20 TO 30 FT. FILLS

VIRGINIA DEPARTMENT OF TRANSPORTATION

SPECIFICATION REFERENCE

BCD-30

FOR TYPICAL SECTION, NOTES AND OTHER DETAILS, REFER TO STANDARD BCD-DT.

		REINFORCING STEEL													QUAN./LF		HEADWALLS								
SPAN	HGHT	BT1															G	HW1							
(FT.)	(FT.)	SIZE	SPACING c-c	a	b	c	d	e	f	g	LENGTH	NO. BL1 #4 BARS	NO. BL2 #3 BARS	REINFORCING STEEL (LBS/LONG. JT)	CONCRETE CLASS A4 (CY/LF)	REINFORCING STEEL (LBS/LF)	HEADWALL LENGTH	SIZE	LENGTH	NO. HW2 BARS	NO. HW3 BARS	INLET CONCRETE CL. A4 (CY)	INLET REINFORCING STEEL (LBS)	OUTLET CONCRETE CL. A4 (CY)	OUTLET REINFORCING STEEL (LBS)	WINGWALL
3	3	4	12"	2'- 7"	0'- 4"	1'- 10"	0'- 5 1/8"	0'- 3 1/4"	7'- 8"	-----	7'-10"	32	12	30.950	0.695	78.691	9'- 6"	6	9'- 2"	1	4	1.433	67.988	1.425	55.073	A
3	4	4	12"	2'- 7"	0'- 4"	1'- 10"	0'- 5 1/8"	0'- 3 1/4"	7'- 8"	-----	7'-10"	32	18	33.065	0.768	84.955	9'- 6"	6	9'- 2"	1	5	1.531	71.439	1.517	55.073	C
4	3	4	12"	3'- 4"	0'- 4 1/2"	2'- 3"	0'- 5 7/8"	0'- 3 3/4"	9'- 8"	-----	9'-11"	40	12	37.636	0.823	92.431	11'- 6"	6	11'- 2"	1	4	1.629	80.004	1.628	67.089	A
4	4	4	12"	3'- 4"	0'- 4 1/2"	2'- 3"	0'- 5 7/8"	0'- 3 3/4"	9'- 8"	-----	9'-11"	40	18	39.745	0.897	98.695	11'- 6"	6	11'- 2"	1	5	1.728	83.455	1.721	67.089	C
4	5	4	12"	3'- 4"	0'- 4 3/4"	2'- 3"	0'- 6 1/4"	0'- 4"	9'- 8"	-----	9'-11"	40	24	41.860	0.986	105.149	11'- 6"	6	11'- 2"	1	6	1.824	86.907	1.811	67.089	E
4	6	4	12"	3'- 4"	0'- 4 3/4"	2'- 3"	0'- 6 1/4"	0'- 4"	9'- 8"	-----	9'-11"	40	30	43.975	1.059	116.756	11'- 6"	6	11'- 2"	1	7	1.923	90.358	1.903	67.089	G
5	3	4	12"	4'- 0"	0'- 6 1/4"	2'- 8"	0'- 8 3/8"	0'- 5 1/2"	11'- 8"	-----	12'- 0"	48	12	44.316	1.058	87.080	13'- 6"	6	13'- 2"	1	4	1.816	92.020	1.822	79.105	B
5	4	4	12"	4'- 0"	0'- 6 1/4"	2'- 8"	0'- 8 3/8"	0'- 5 1/2"	11'- 8"	-----	12'- 0"	48	18	46.425	1.132	93.344	13'- 6"	6	13'- 2"	1	5	1.915	95.471	1.915	79.105	D
5	5	4	12"	4'- 0"	0'- 6 1/4"	2'- 8"	0'- 8 3/8"	0'- 5 1/2"	11'- 8"	-----	12'- 0"	48	24	48.540	1.205	99.608	13'- 6"	6	13'- 2"	1	6	2.014	98.923	2.007	79.105	F
5	6	4	12"	4'- 0"	0'- 6 1/4"	2'- 8"	0'- 8 3/8"	0'- 5 1/2"	11'- 8"	-----	12'- 0"	48	30	50.655	1.278	119.790	13'- 6"	6	13'- 2"	1	7	2.113	102.374	2.100	79.105	H
5	7	4	12"	4'- 0"	0'- 6 1/4"	2'- 8"	0'- 8 3/8"	0'- 5 1/2"	11'- 8"	-----	12'- 0"	48	36	52.770	1.351	134.208	13'- 6"	6	13'- 2"	1	8	2.212	105.825	2.193	79.105	J
6	4	4	11"	4'- 8"	0'- 8 1/4"	3'- 0"	0'-11 1/8"	0'- 7 1/2"	13'- 8"	-----	14'- 2"	56	18	53.105	1.428	134.521	15'- 6"	6	15'- 2"	1	5	2.056	107.487	2.062	91.121	D
6	5	4	11"	4'- 8"	0'- 8 1/4"	3'- 0"	0'-11 1/8"	0'- 7 1/2"	13'- 8"	-----	14'- 2"	56	24	55.220	1.502	140.907	15'- 6"	6	15'- 2"	1	6	2.155	110.939	2.155	91.121	F
6	6	4	11"	4'- 8"	0'- 8"	3'- 0"	0'-10 7/8"	0'- 7 1/4"	13'- 8"	-----	14'- 1"	56	30	57.335	1.553	156.722	15'- 6"	6	15'- 2"	1	7	2.260	114.390	2.254	91.121	H
6	7	4	10"	4'- 8"	0'- 8"	3'- 0"	0'-10 7/8"	0'- 7 1/4"	13'- 8"	-----	14'- 1"	56	36	59.468	1.625	179.230	15'- 6"	6	15'- 2"	1	8	2.359	117.841	2.347	91.121	J
6	8	4	10"	4'- 8"	0'- 8"	3'- 0"	0'-10 7/8"	0'- 7 1/4"	13'- 8"	-----	14'- 1"	56	42	61.586	1.698	199.576	15'- 6"	6	15'- 2"	1	9	2.458	121.293	2.439	91.121	L
7	4	4	9"	5'- 4"	0'- 9 3/4"	3'- 5"	1'- 1 1/4"	0'- 9"	15'- 8"	-----	16'- 3"	64	18	59.785	1.724	184.605	17'- 6"	6	17'- 2"	1	5	2.188	119.503	2.200	103.137	D
7	6	4	9"	5'- 4"	0'- 9 3/4"	3'- 5"	1'- 1 1/4"	0'- 9"	15'- 8"	-----	16'- 3"	64	30	64.015	1.871	198.024	17'- 6"	6	17'- 2"	1	7	2.386	126.406	2.386	103.137	H
7	8	4	9"	5'- 4"	0'- 9 3/4"	3'- 5"	1'- 1 1/4"	0'- 9"	15'- 8"	-----	16'- 3"	64	42	68.245	2.016	241.421	17'- 6"	6	17'- 2"	1	9	2.584	133.309	2.571	103.137	L
7	10	4	9"	5'- 5"	0'- 9 3/4"	3'- 5"	1'- 1 1/4"	0'- 9"	15'-11"	-----	16'- 6"	64	54	72.475	2.273	304.636	17'- 6"	6	17'- 2"	1	11	2.781	140.211	2.757	103.137	P
8	4	4	8"	6'- 0"	0'-11 1/2"	3'-10"	1'- 3 3/4"	0'-10 3/4"	17'- 8"	-----	18'- 4"	72	18	66.465	2.085	220.724	19'- 6"	6	19'- 2"	1	5	2.310	131.519	2.329	115.153	E
8	6	4	8"	6'- 0"	0'-11 1/2"	3'-10"	1'- 3 3/4"	0'-10 3/4"	17'- 8"	-----	18'- 4"	72	30	70.695	2.232	234.588	19'- 6"	6	19'- 2"	1	7	2.508	138.422	2.515	115.153	I
8	8	4	8"	6'- 0"	0'-11 1/2"	3'-10"	1'- 3 3/4"	0'-10 3/4"	17'- 8"	-----	18'- 4"	72	42	74.925	2.377	281.303	19'- 6"	6	19'- 2"	1	9	2.706	145.325	2.700	115.153	M
8	10	4	8"	6'- 1"	0'-11 1/2"	3'-10"	1'- 3 3/4"	0'-10 3/4"	17'- 9"	-----	18'- 6"	72	54	79.155	2.598	348.038	19'- 6"	6	19'- 2"	1	11	2.904	152.227	2.886	115.153	Q
9	4	5	9"	6'- 8"	1'- 1 1/4"	4'- 3"	1'- 6 1/8"	1'- 3/8"	19'- 8"	-----	20'- 6"	80	18	73.145	2.487	288.872	21'- 6"	6	21'- 2"	1	5	2.393	143.535	2.418	127.169	E
9	6	5	9"	6'- 8"	1'- 1 1/4"	4'- 3"	1'- 6 1/8"	1'- 3/8"	19'- 8"	-----	20'- 6"	80	30	77.375	2.635	302.533	21'- 6"	6	21'- 2"	1	7	2.590	150.438	2.604	127.169	I
9	8	5	9"	6'- 7"	1'- 1 1/2"	4'- 3"	1'- 6 1/2"	1'- 5/8"	19'- 8"	-----	20'- 6"	80	42	81.605	2.810	350.619	21'- 6"	6	21'- 2"	1	9	2.778	157.341	2.779	127.169	M
9	10	5	9"	6'- 8"	1'- 1 1/2"	4'- 3"	1'- 6 1/2"	1'- 5/8"	19'- 9"	-----	20'- 8"	80	54	85.835	3.034	404.994	21'- 6"	6	21'- 2"	1	11	2.976	164.243	2.964	127.169	Q
9	12	5	9"	6'- 10"	1'- 1 1/2"	4'- 3"	1'- 6 1/2"	1'- 5/8"	20'- 2"	-----	21- 0"	80	66	90.065	3.374	463.575	21'- 6"	6	21'- 2"	1	13	3.128	171.146	3.104	127.169	U
10	4	5	8"	7'- 3"	1'- 3"	4'- 8"	1'- 8 5/8"	1'- 2 1/8"	21'- 8"	-----	22'- 7"	88	18	79.825	2.938	289.339	23'- 6"	6	23'- 2"	1	5	2.477	155.551	2.510	139.185	E
10	6	6	9"	7'- 4"	1'- 2 3/4"	4'- 8"	1'- 8 1/8"	1'- 1 3/4"	21'- 8"	-----	22'- 7"	88	30	84.055	3.047	357.346	23'- 6"	6	23'- 2"	1	7	2.663	162.454	2.683	139.185	I
10	8	6	9"	7'- 4"	1'- 2 3/4"	4'- 8"	1'- 8 1/8"	1'- 1 3/4"	21'- 8"	-----	22'- 7"	88	42	88.285	3.192	404.290	23'- 6"	6	23'- 2"	1	9	2.861	169.357	2.869	139.185	M
10	10	6	9"	7'- 5"	1'- 3"	4'- 8"	1'- 8 1/2"	1'- 2"	21'- 9"	-----	22'- 9"	88	54	92.515	3.450	469.281	23'- 6"	6	23'- 2"	1	11	3.047	176.259	3.042	139.185	Q
10	12	6	9"	7'- 6"	1'- 3 1/4"	4'- 8"	1'- 8 7/8"	1'- 2 1/4"	22'- 2"	-----	23'- 1"	88	66	96.745	3.828	524.134	23'- 6"	6	23'- 2"	1	13	3.186	183.162	3.168	139.185	U
12	6	7	9"	8'- 8"	1'- 6 1/4"	5'- 5"	2'- 1"	1'- 5"	25'- 8"	-----	26'- 9"	104	30	97.415	4.059	522.958	27'- 6"	6	27'- 2"	1	7	2.741	186.486	2.775	163.217	J
12	8	7	9"	8'- 8"	1'- 6 1/4"	5'- 5"	2'- 1"	1'- 5"	25'- 8"	-----	26'- 9"	104	42	101.645	4.204	574.103	27'- 6"	6	27'- 2"	1	9	2.939	193.389	2.960	163.217	N
12	10	7	9"	8'- 8"	1'- 6 1/4"	5'- 5"	2'- 1"	1'- 5"	25'- 9"	-----	26'-10"	104	54	105.875	4.389	638.521	27'- 6"	6	27'- 2"	1	11	3.137	200.291	3.145	163.217	R
12	12	7	9"	8'- 11"	1'- 6 1/2"	5'- 5"	2'- 1/4"	1'- 5 1/4"	26'- 2"	-----	27'- 4"	104	66	110.105	4.822	699.915	27'- 6"	6	27'- 2"	1	13	3.271	207.194	3.267	163.217	V

A COPY OF THE ORIGINAL SEALED AND SIGNED DRAWING IS ON FILE IN THE CENTRAL OFFICE.

SPECIFICATION REFERENCE

DOUBLE BOX CULVERTS

20 TO 30 FT. FILLS

VIRGINIA DEPARTMENT OF TRANSPORTATION

VDOT

ROAD AND BRIDGE STANDARDS

REVISION DATE 07/11

SHEET 2 OF 2

1003.14

BCD-40

FOR TYPICAL SECTION, NOTES AND OTHER DETAILS, REFER TO STANDARD BCD-DT.

DIMENSIONS						REINFORCING STEEL																										
SPAN	HGHT	T1	T2	T3	T4							BH1			BH2			BH3				BH4					BV1			BV2		
(FT.)	(FT.)	TOP SLAB	BOTTOM SLAB	EXTERIOR WALL (IN.)	INTERIOR WALL (IN.)	A	B	C	D	E	F	SIZE	SPACING C-C	LENGTH	SIZE	SPACING C-C	LENGTH	SIZE	SPACING C-C	a	LENGTH	SIZE	SPACING C-C	a	b	LENGTH	SIZE	SPACING C-C	LENGTH	SIZE	SPACING C-C	LENGTH
3	3	8"	8"	8"	8"	6	6'- 0"	6	6'- 0"	1	1'- 0"	4	12"	6'- 7"	4	12"	7'- 8"	4	12"	2'- 2"	4'- 0"	4	12"	2'- 4"	2'- 9"	4'- 9"	4	12"	4'- 0"	4	12"	4'- 0"
3	4	8"	8"	8"	8"	6	6'- 0"	6	6'- 0"	2	2'- 0"	4	12"	6'- 7"	4	12"	7'- 8"	3	12"	2'- 4"	4'- 5"	4	12"	2'- 4"	3'- 3"	5'- 3"	4	12"	5'- 0"	4	12"	5'- 0"
4	3	10"	10"	8"	8"	8	8'- 0"	8	8'- 0"	1	1'- 0"	4	12"	8'- 7"	4	12"	9'- 8"	--	---	-----	-----	4	12"	2'- 4"	2'-10"	4'- 11"	4	12"	4'- 3"	4	12"	4'- 3"
4	4	10"	10"	8"	8"	8	8'- 0"	8	8'- 0"	2	2'- 0"	4	12"	8'- 7"	4	12"	9'- 8"	--	---	-----	-----	4	12"	2'- 4"	3'- 4"	5'- 5"	4	12"	5'- 3"	4	12"	5'- 3"
4	5	10"	10"	8"	8"	8	8'- 0"	8	8'- 0"	3	3'- 0"	4	12"	8'- 7"	4	12"	9'- 8"	--	---	-----	-----	4	12"	2'- 4"	3'-10"	5'- 11"	4	12"	6'- 3"	4	12"	6'- 3"
4	6	10"	10"	8"	8"	8	8'- 0"	8	8'- 0"	4	4'- 0"	4	12"	8'- 7"	4	12"	9'- 8"	3	12"	2'-11"	5'- 7"	4	12"	2'- 4"	4'- 4"	6'- 5"	5	12"	7'- 3"	4	12"	7'- 3"
5	3	12½"	12½"	8"	8"	10	10'- 0"	10	10'- 0"	1	1'- 0"	4	11"	10'- 7"	4	11"	11'- 8"	--	---	-----	-----	4	11"	2'- 4"	3'- 1"	5'- 1"	4	12"	4'- 9"	4	12"	4'- 9"
5	4	12½"	12½"	8"	8"	10	10'- 0"	10	10'- 0"	2	2'- 0"	4	11"	10'- 7"	4	11"	11'- 8"	--	---	-----	-----	4	11"	2'- 4"	3'- 7"	5'- 7"	4	12"	5'- 9"	4	12"	5'- 9"
5	5	12½"	12½"	8"	8"	10	10'- 0"	10	10'- 0"	3	3'- 0"	4	11"	10'- 7"	4	11"	11'- 8"	--	---	-----	-----	4	11"	2'- 4"	4'- 1"	6'- 1"	4	12"	6'- 9"	4	12"	6'- 9"
5	6	12¼"	12¼"	8"	8"	10	10'- 0"	10	10'- 0"	4	4'- 0"	4	11"	10'- 7"	4	11"	11'- 8"	3	11"	3'- 1"	5'-11"	4	11"	2'- 4"	4'- 7"	6'- 7"	5	12"	7'- 8"	4	12"	7'- 8"
5	7	12¼"	12¼"	8"	8"	10	10'- 0"	10	10'- 0"	5	5'- 0"	4	11"	10'- 7"	4	11"	11'- 8"	4	11"	3'- 4"	6'- 3"	4	11"	2'- 4"	5'- 1"	7'- 1"	5	8"	8'- 8"	4	12"	8'- 8"
6	4	14½"	14½"	8"	8"	12	12'- 0"	12	12'- 0"	2	2'- 0"	4	9"	12'- 7"	4	9"	13'- 8"	--	---	-----	-----	4	9"	2'- 4"	3'- 9"	5'- 9"	4	12"	6'- 0"	4	12"	6'- 0"
6	5	14½"	14½"	8"	8"	12	12'- 0"	12	12'- 0"	3	3'- 0"	4	9"	12'- 7"	4	9"	13'- 8"	--	---	-----	-----	4	9"	2'- 4"	4'- 3"	6'- 3"	4	12"	7'- 0"	4	12"	7'- 0"
6	6	14¼"	14¼"	8"	8"	12	12'- 0"	12	12'- 0"	4	4'- 0"	4	9"	12'- 7"	4	9"	13'- 8"	--	---	-----	-----	4	9"	2'- 4"	4'- 9"	6'- 9"	5	12"	8'- 0"	4	12"	8'- 0"
6	7	14¼"	14¼"	8"	8"	12	12'- 0"	12	12'- 0"	5	5'- 0"	4	9"	12'- 7"	4	9"	13'- 8"	3	9"	3'- 6"	6'- 8"	4	9"	2'- 4"	5'- 3"	7'- 3"	5	8"	9'- 0"	4	12"	9'- 0"
6	8	14¼"	14¼"	8½"	8"	12	12'- 0"	12	12'- 0"	6	6'- 0"	4	9"	12'- 5"	4	9"	13'- 9"	--	---	-----	-----	5	9"	2'- 6"	5'- 11"	8'- 0"	5	6"	10'- 0"	4	12"	10'- 0"
7	4	16½"	16½"	8"	8"	14	14'- 0"	14	14'- 0"	2	2'- 0"	5	8"	14'- 7"	4	8"	15'- 8"	--	---	-----	-----	4	8"	2'- 9"	3'- 11"	6'- 4"	4	12"	6'- 5"	4	11"	6'- 5"
7	6	16¼"	16¼"	8"	8"	14	14'- 0"	14	14'- 0"	4	4'- 0"	5	9"	14'- 7"	4	9"	15'- 8"	--	---	-----	-----	4	9"	2'- 9"	4'- 11"	7'- 4"	5	12"	8'- 4"	4	11"	8'- 4"
7	8	16¼"	16¼"	8"	8"	14	14'- 0"	14	14'- 0"	6	6'- 0"	5	9"	14'- 7"	5	9"	15'- 8"	3	9"	3'-10"	7'- 5"	4	9"	2'- 9"	5'- 11"	8'- 4"	5	6"	10'- 4"	4	11"	10'- 4"
7	10	16¼"	16¼"	10½"	8"	14	14'- 0"	14	14'- 0"	8	8'- 0"	5	9"	14'- 9"	5	9"	16'- 0"	3	9"	4'- 3"	8'- 3"	5	9"	2'- 11"	7'- 1"	9'- 7"	6	9"	12'- 4"	4	11"	12'- 4"
8	4	18½"	18½"	8"	8"	16	16'- 0"	16	16'- 0"	2	2'- 0"	6	9"	16'- 7"	5	9"	17'- 8"	--	---	-----	-----	4	9"	3'- 2"	4'- 1"	6'- 11"	4	12"	6'- 9"	4	10"	6'- 9"
8	6	18½"	18½"	8"	8"	16	16'- 0"	16	16'- 0"	4	4'- 0"	6	9"	16'- 7"	5	9"	17'- 8"	--	---	-----	-----	4	9"	3'- 2"	5'- 1"	7'- 11"	5	12"	8'- 9"	4	10"	8'- 9"
8	8	18¾"	18¾"	8½"	8"	16	16'- 0"	16	16'- 0"	6	6'- 0"	6	9"	16'- 5"	5	9"	17'- 9"	--	---	-----	-----	5	9"	3'- 4"	6'- 3"	9'- 2"	5	6"	10'- 9"	4	10"	10'- 9"
8	10	18½"	18½"	10½"	8"	16	16'- 0"	16	16'- 0"	8	8'- 0"	6	9"	16'- 6"	5	9"	18'- 0"	--	---	-----	-----	6	9"	3'- 5"	7'- 5"	10'- 5"	4	4"	12'- 9"	4	10"	12'- 9"
9	4	20½"	20½"	8"	8"	18	18'- 0"	18	18'- 0"	2	2'- 0"	6	9"	18'- 7"	5	9"	19'- 8"	--	---	-----	-----	4	9"	3'- 2"	4'- 3"	7'- 1"	4	12"	7'- 0"	4	10"	7'- 0"
9	6	20½"	20½"	8"	8"	18	18'- 0"	18	18'- 0"	4	4'- 0"	6	9"	18'- 7"	5	9"	19'- 8"	--	---	-----	-----	4	9"	3'- 2"	5'- 3"	8'- 1"	5	12"	9'- 0"	4	10"	9'- 0"
9	8	20¼"	20¼"	8"	8"	18	18'- 0"	18	18'- 0"	6	6'- 0"	6	9"	18'- 7"	5	9"	19'- 8"	3	9"	4'- 2"	8'- 1"	4	9"	3'- 2"	6'- 3"	9'- 1"	5	6"	11'- 0"	4	10"	11'- 0"
9	10	20"	20"	11"	8"	18	18'- 0"	18	18'- 0"	8	8'- 0"	6	9"	18'-10"	5	9"	20'- 2"	3	9"	4'- 6"	8'-10"	5	9"	3'- 4"	7'- 4"	10'- 4"	4	4"	13'- 0"	4	10"	13'- 0"
9	12	20½"	20½"	13"	8"	18	18'- 0"	18	18'- 0"	10	10'- 0"	6	9"	18'-11"	5	9"	20'- 6"	3	9"	5'- 0"	9'- 9"	6	9"	3'- 5"	8'- 7"	11'- 7"	6	7½"	15'- 0"	4	10"	15'- 0"
10	4	22¾"	22¾"	8"	8"	20	20'- 0"	20	20'- 0"	2	2'- 0"	6	8"	20'- 7"	5	8"	21'- 8"	--	---	-----	-----	4	8"	3'- 2"	4'- 5"	7'- 4"	4	12"	7'- 5"	4	10"	7'- 5"
10	6	22¾"	22¾"	8"	8"	20	20'- 0"	20	20'- 0"	4	4'- 0"	6	8"	20'- 7"	5	8"	21'- 8"	--	---	-----	-----	4	8"	3'- 2"	5'- 5"	8'- 4"	5	11½"	9'- 5"	4	10"	9'- 5"
10	8	22½"	22½"	8"	8"	20	20'- 0"	20	20'- 0"	6	6'- 0"	6	8"	20'- 7"	5	8"	21'- 8"	3	8"	4'- 4"	8'- 6"	4	8"	3'- 2"	6'- 5"	9'- 3"	6	9"	11'- 5"	4	10"	11'- 5"
10	10	22¼"	22¼"	10"	8"	20	20'- 0"	20	20'- 0"	8	8'- 0"	6	8"	20'- 8"	5	8"	22'- 0"	3	8"	4'- 9"	9'- 3"	5	8"	3'- 4"	7'- 7"	10'- 6"	5	6"	13'- 4"	4	10"	13'- 4"
10	12	22¼"	22¼"	12½"	8"	20	20'- 0"	20	20'- 0"	10	10'- 0"	7	9"	20'-10"	6	9"	22'- 5"	3	9"	5'- 2"	10'- 0"	6	9"	4'- 1"	8'- 9"	12'- 5"	6	7½"	15'- 4"	4	10"	15'- 4"
12	6	27½"	27½"	8"	8"	24	24'- 0"	24	24'- 0"	4	4'- 0"	7	9"	24'- 7"	6	9"	25'- 8"	--	---	-----	-----	4	9"	3'- 10"	5'- 10"	9'- 4"	5	10"	10'- 3"	4	8½"	10'- 3"
12	8	27"	27"	8"	8"	24	24'- 0"	24	24'- 0"	6	6'- 0"	7	9"	24'- 7"	6	9"	25'- 8"	3	9"	4'- 9"	9'- 3"	4	9"	3'- 10"	6'- 9"	10'- 4"	5	5½"	12'- 2"	4	8½"	12'- 2"
12	10	27"	27"	9½"	8"	24	24'- 0"	24	24'- 0"	8	8'- 0"	7	9"	24'- 7"	6	9"	25'-11"	3	9"	5'- 1"	10'- 0"	5	9"	4'- 0"	8'- 0"	11'- 7"	7	8"	14'- 2"	4	8½"	14'- 2"
12	12	26¾"	26¾"	12"	8"	24	24'- 0"	24	24'- 0"	10	10'- 0"	7	9"	24'- 9"	6	9"	26'- 3"	3	9"	5'- 6"	10'- 9"	6	9"	4'- 1"	9'- 1"	12'- 9"	5	5"	16'- 1"	4	8½"	16'- 1"

A COPY OF THE ORIGINAL SEALED AND SIGNED DRAWING IS ON FILE IN THE CENTRAL OFFICE.

VDOT
ROAD AND BRIDGE STANDARDS

SHEET 1 OF 2 | REVISION DATE
1003.15 | 07/11

DOUBLE BOX CULVERTS

30 TO 40 FT. FILLS

VIRGINIA DEPARTMENT OF TRANSPORTATION

SPECIFICATION REFERENCE

BCD-40

FOR TYPICAL SECTION, NOTES AND OTHER DETAILS, REFER TO STANDARD BCD-DT.

		REINFORCING STEEL													QUAN./LF		HEADWALLS									
SPAN	HGHT	BT1															G	HW1								
(FT.)	(FT.)	SIZE	SPACING c-c	a	b	c	d	e	f	g	LENGTH	NO. BL1 #4 BARS	NO. BL2 #3 BARS	REINFORCING STEEL (LBS/LONG. JT)	CONCRETE CLASS A4 (CY/LF)	REINFORCING STEEL (LBS/LF)	HEADWALL LENGTH	SIZE	LENGTH	NO. HW2 BARS	NO. HW3 BARS	INLET CONCRETE CL. A4 (CY)	INLET REINFORCING STEEL (LBS)	OUTLET CONCRETE CL. A4 (CY)	OUTLET REINFORCING STEEL (LBS)	WINGWALL
3	3	4	12"	2'- 7"	0'- 4"	1'- 10"	0'- 5 1/8"	0'- 3 1/4"	7'- 8"	-----	7'-10"	32	12	30.950	0.694	89.205	9'- 6"	6	9'- 2"	1	4	1.433	67.988	1.425	55.073	A
3	4	4	12"	2'- 7"	0'- 4"	1'- 10"	0'- 5 1/8"	0'- 3 1/4"	7'- 8"	-----	7'-10"	32	18	33.065	0.768	91.575	9'- 6"	6	9'- 2"	1	5	1.531	71.439	1.517	55.073	C
4	3	4	12"	3'- 3"	0'- 6"	2'- 3"	0'- 8"	0'- 5 1/4"	9'- 8"	-----	10'- 0"	40	12	37.630	0.916	93.570	11'- 6"	6	11'- 2"	1	4	1.631	80.004	1.630	67.089	B
4	4	4	12"	3'- 3"	0'- 6"	2'- 3"	0'- 8"	0'- 5 1/4"	9'- 8"	-----	10'- 0"	40	18	39.754	0.989	99.834	11'- 6"	6	11'- 2"	1	5	1.730	83.455	1.722	67.089	D
4	5	4	12"	3'- 3"	0'- 6"	2'- 3"	0'- 8"	0'- 5 1/4"	9'- 8"	-----	10'- 0"	40	24	41.860	1.063	106.098	11'- 6"	6	11'- 2"	1	6	1.829	86.907	1.815	67.089	F
4	6	4	12"	3'- 3"	0'- 6"	2'- 3"	0'- 8"	0'- 5 1/4"	9'- 8"	-----	10'- 0"	40	30	43.975	1.136	126.186	11'- 6"	6	11'- 2"	1	7	1.928	90.358	1.908	67.089	H
5	3	4	11"	3'- 10"	0'- 8 1/2"	2'- 8"	0'-11 1/2"	0'- 7 3/4"	11'- 8"	-----	12'- 2"	48	12	44.316	1.224	94.204	13'- 6"	6	13'- 2"	1	4	1.786	92.020	1.791	79.105	B
5	4	4	11"	3'- 10"	0'- 8 1/2"	2'- 8"	0'-11 1/2"	0'- 7 3/4"	11'- 8"	-----	12'- 2"	48	18	46.425	1.298	100.590	13'- 6"	6	13'- 2"	1	5	1.885	95.471	1.884	79.105	D
5	5	4	11"	3'- 10"	0'- 8 1/2"	2'- 8"	0'-11 1/2"	0'- 7 3/4"	11'- 8"	-----	12'- 2"	48	24	48.540	1.372	106.975	13'- 6"	6	13'- 2"	1	6	1.984	98.923	1.977	79.105	F
5	6	4	11"	3'- 10"	0'- 8 1/4"	2'- 8"	0'-11 1/8"	0'- 7 1/2"	11'- 8"	-----	12'- 2"	48	30	50.655	1.425	128.640	13'- 6"	6	13'- 2"	1	7	2.078	102.374	2.065	79.105	H
5	7	4	11"	3'- 10"	0'- 8 1/4"	2'- 8"	0'-11 1/8"	0'- 7 1/2"	11'- 8"	-----	12'- 2"	48	36	52.770	1.498	153.361	13'- 6"	6	13'- 2"	1	8	2.177	105.825	2.158	79.105	J
6	4	4	9"	4'- 6"	0'-10 1/2"	3'- 0"	1'- 2 3/8"	0'- 9 3/4"	13'- 8"	-----	14'- 4"	56	18	53.105	1.621	153.154	15'- 6"	6	15'- 2"	1	5	2.009	107.487	2.015	91.121	D
6	5	4	9"	4'- 6"	0'-10 1/2"	3'- 0"	1'- 2 3/8"	0'- 9 3/4"	13'- 8"	-----	14'- 4"	56	24	55.220	1.695	159.864	15'- 6"	6	15'- 2"	1	6	2.102	110.939	2.102	91.121	F
6	6	4	9"	4'- 6"	0'-10 1/4"	3'- 0"	1'- 2"	0'- 9 1/2"	13'- 8"	-----	14'- 3"	56	30	57.335	1.746	172.388	15'- 6"	6	15'- 2"	1	7	2.207	114.390	2.201	91.121	H
6	7	4	9"	4'- 6"	0'-10 1/4"	3'- 0"	1'- 2"	0'- 9 1/2"	13'- 8"	-----	14'- 3"	56	36	59.450	1.818	202.599	15'- 6"	6	15'- 2"	1	8	2.306	117.841	2.293	91.121	J
6	8	4	9"	4'- 6"	0'-10 1/4"	3'- 0"	1'- 2"	0'- 9 1/2"	13'- 9"	-----	14'- 4"	56	42	61.565	1.922	224.956	15'- 6"	6	15'- 2"	1	9	2.405	121.293	2.386	91.121	L
7	4	4	8"	5'- 1"	1'- 0 1/2"	3'- 5"	1'- 5 1/8"	0'-11 3/4"	15'- 8"	-----	16'- 5"	64	18	59.785	1.994	202.803	17'- 6"	6	17'- 2"	1	5	2.132	119.503	2.144	103.137	E
7	6	5	9"	5'- 2"	1'- 0 1/4"	3'- 5"	1'- 4 3/4"	0'-11 3/8"	15'- 8"	-----	16'- 5"	64	30	64.015	2.116	223.899	17'- 6"	6	17'- 2"	1	7	2.330	126.406	2.330	103.137	I
7	8	5	9"	5'- 2"	1'- 0 1/4"	3'- 5"	1'- 4 3/4"	0'-11 3/8"	15'- 8"	-----	16'- 5"	64	42	68.245	2.259	291.161	17'- 6"	6	17'- 2"	1	9	2.528	133.309	2.515	103.137	M
7	10	4	9"	5'- 4"	1'- 0 1/4"	3'- 5"	1'- 4 7/8"	0'-11 1/2"	16'- 0"	-----	16'-10"	64	54	72.475	2.601	315.835	17'- 6"	6	17'- 2"	1	11	2.687	140.211	2.662	103.137	Q
8	4	5	9"	5'- 9"	1'- 2 1/2"	3'- 10"	1'- 7 7/8"	1'- 1 5/8"	17'- 8"	-----	18'- 7"	72	18	66.474	2.415	266.568	19'- 6"	6	19'- 2"	1	5	2.211	131.519	2.230	115.153	E
8	6	5	9"	5'- 9"	1'- 2 1/2"	3'- 10"	1'- 7 7/8"	1'- 1 5/8"	17'- 8"	-----	18'- 7"	72	30	70.695	2.562	287.084	19'- 6"	6	19'- 2"	1	7	2.400	138.422	2.407	115.153	I
8	8	5	9"	5'- 9"	1'- 2 3/4"	3'- 10"	1'- 8 1/4"	1'- 1 7/8"	17'- 9"	-----	18'- 8"	72	42	74.925	2.768	344.193	19'- 6"	6	19'- 2"	1	9	2.589	145.325	2.583	115.153	M
8	10	5	9"	5'- 11"	1'- 2 1/2"	3'- 10"	1'- 7 7/8"	1'- 1 5/8"	18'- 0"	-----	19'- 0"	72	54	79.155	3.052	392.132	19'- 6"	6	19'- 2"	1	11	2.756	152.227	2.737	115.153	Q
9	4	6	9"	6'- 5"	1'- 4 1/2"	4'- 3"	1'-10 5/8"	1'- 3 1/2"	19'- 8"	-----	20'- 8"	80	18	73.154	2.886	318.325	21'- 6"	6	21'- 2"	1	5	2.266	143.535	2.292	127.169	E
9	6	6	9"	6'- 5"	1'- 4 1/2"	4'- 3"	1'-10 5/8"	1'- 3 1/2"	19'- 8"	-----	20'- 8"	80	30	77.375	3.033	339.090	21'- 6"	6	21'- 2"	1	7	2.464	150.438	2.477	127.169	I
9	8	6	9"	6'- 5"	1'- 4 1/4"	4'- 3"	1'-10 1/4"	1'- 3 1/4"	19'- 8"	-----	20'- 8"	80	42	81.605	3.146	393.408	21'- 6"	6	21'- 2"	1	9	2.662	157.341	2.663	127.169	M
9	10	6	9"	6'- 8"	1'- 4"	4'- 3"	1'- 9 7/8"	1'- 3"	20'- 2"	-----	21'- 2"	80	54	85.835	3.507	437.714	21'- 6"	6	21'- 2"	1	11	2.829	164.243	2.818	127.169	Q
9	12	6	9"	6'- 10"	1'- 4 1/2"	4'- 3"	1'-10 5/8"	1'- 3 1/2"	20'- 6"	-----	21'- 6"	80	66	90.065	3.941	505.735	21'- 6"	6	21'- 2"	1	13	2.858	171.146	2.833	127.169	U
10	4	6	8"	7'- 0"	1'- 6 3/4"	4'- 8"	2'- 1 3/4"	1'- 5 3/4"	21'- 8"	-----	22'-10"	88	18	79.825	3.440	380.166	23'- 6"	6	23'- 2"	1	5	2.290	155.551	2.323	139.185	F
10	6	6	8"	7'- 0"	1'- 6 3/4"	4'- 8"	2'- 1 3/4"	1'- 5 3/4"	21'- 8"	-----	22'-10"	88	30	84.055	3.587	402.516	23'- 6"	6	23'- 2"	1	7	2.488	162.454	2.508	139.185	J
10	8	6	8"	7'- 0"	1'- 6 1/2"	4'- 8"	2'- 1 3/8"	1'- 5 1/2"	21'- 8"	-----	22'-10"	88	42	88.285	3.697	458.144	23'- 6"	6	23'- 2"	1	9	2.698	169.357	2.706	139.185	N
10	10	6	8"	7'- 2"	1'- 6 1/4"	4'- 8"	2'- 1 1/8"	1'- 5 1/4"	22'- 0"	-----	23'- 2"	88	54	92.515	3.976	508.710	23'- 6"	6	23'- 2"	1	11	2.866	176.259	2.861	139.185	R
10	12	6	9"	7'- 5"	1'- 6 1/4"	4'- 8"	2'- 1 1/8"	1'- 5 1/4"	22'- 5"	-----	23'- 7"	88	66	96.745	4.385	598.699	23'- 6"	6	23'- 2"	1	13	2.914	183.162	2.895	139.185	V
12	6	7	9"	8'- 3"	1'-11 1/2"	5'- 5"	2'- 8 3/8"	1'-10 1/4"	25'- 8"	-----	27'- 2"	104	30	97.415	4.900	543.924	27'- 6"	6	27'- 2"	1	7	2.468	186.486	2.501	163.217	J
12	8	7	9"	8'- 3"	1'-11"	5'- 5"	2'- 7 5/8"	1'- 9 3/4"	25'- 8"	-----	27'- 1"	104	42	101.645	4.964	603.378	27'- 6"	6	27'- 2"	1	9	2.681	193.389	2.702	163.217	N
12	10	7	9"	8'- 5"	1'-11"	5'- 5"	2'- 7 5/8"	1'- 9 3/4"	25'- 11"	-----	27'- 4"	104	54	105.875	5.241	674.441	27'- 6"	6	27'- 2"	1	11	2.835	200.291	2.843	163.217	R
12	12	7	9"	8'- 7"	1'-10 3/4"	5'- 5"	2'- 7 1/4"	1'- 9 1/2"	26'- 3"	-----	27'- 9"	104	66	110.138	5.617	720.581	27'- 6"	6	27'- 2"	1	13	2.860	207.194	2.855	163.217	V

A COPY OF THE ORIGINAL SEALED AND SIGNED DRAWING IS ON FILE IN THE CENTRAL OFFICE.

SPECIFICATION REFERENCE

DOUBLE BOX CULVERTS

30 TO 40 FT. FILLS

VIRGINIA DEPARTMENT OF TRANSPORTATION

VDOT

ROAD AND BRIDGE STANDARDS

REVISION DATE 07/11

SHEET 2 OF 2

1003.16

BCD-50

FOR TYPICAL SECTION, NOTES AND OTHER DETAILS, REFER TO STANDARD BCD-DT.

DIMENSIONS						REINFORCING STEEL																										
SPAN	HGHT	T1	T2	T3	T4							BH1			BH2			BH3				BH4					BV1			BV2		
(FT.)	(FT.)	TOP SLAB	BOTTOM SLAB	EXTERIOR WALL (IN.)	INTERIOR WALL (IN.)	A	B	C	D	E	F	SIZE	SPACING C-C	LENGTH	SIZE	SPACING C-C	LENGTH	SIZE	SPACING C-C	a	LENGTH	SIZE	SPACING C-C	a	b	LENGTH	SIZE	SPACING C-C	LENGTH	SIZE	SPACING C-C	LENGTH
3	3	9¼"	9¼"	8"	8"	6	6'- 0"	6	6'- 0"	1	1'- 0"	4	12"	6'- 7"	4	12"	7'- 8"	--	---	-----	-----	4	12"	2'- 4"	2'- 10"	4'- 10"	4	12"	4'- 2"	4	12"	4'- 2"
3	4	9¼"	9¼"	8"	8"	6	6'- 0"	6	6'- 0"	2	2'- 0"	4	12"	6'- 7"	4	12"	7'- 8"	--	---	-----	-----	4	12"	2'- 4"	3'- 4"	5'- 4"	4	12"	5'- 2"	4	12"	5'- 2"
4	3	11½"	11½"	8"	8"	8	8'- 0"	8	8'- 0"	1	1'- 0"	4	12"	8'- 7"	4	12"	9'- 8"	--	---	-----	-----	4	12"	2'- 4"	3'- 0"	5'- 0"	4	12"	4'- 6"	4	12"	4'- 6"
4	4	11½"	11½"	8"	8"	8	8'- 0"	8	8'- 0"	2	2'- 0"	4	12"	8'- 7"	4	12"	9'- 8"	--	---	-----	-----	4	12"	2'- 4"	3'- 6"	5'- 6"	4	12"	5'- 6"	4	12"	5'- 6"
4	5	11¼"	11¼"	8"	8"	8	8'- 0"	8	8'- 0"	3	3'- 0"	4	12"	8'- 7"	4	12"	9'- 8"	--	---	-----	-----	4	12"	2'- 4"	4'- 0"	6'- 0"	5	12"	6'- 6"	4	12"	6'- 6"
4	6	11¼"	11¼"	8"	8"	8	8'- 0"	8	8'- 0"	4	4'- 0"	4	12"	8'- 7"	4	12"	9'- 8"	4	12"	3'- 0"	5'- 9"	4	12"	2'- 4"	4'- 6"	6'- 6"	5	9"	7'- 6"	4	12"	7'- 6"
5	3	14½"	14½"	8"	8"	10	10'- 0"	10	10'- 0"	1	1'- 0"	4	10"	10'- 7"	4	10"	11'- 8"	--	---	-----	-----	4	10"	2'- 4"	3'- 3"	5'- 3"	4	12"	5'- 0"	4	12"	5'- 0"
5	4	14"	14"	8"	8"	10	10'- 0"	10	10'- 0"	2	2'- 0"	4	10"	10'- 7"	4	10"	11'- 8"	--	---	-----	-----	4	10"	2'- 4"	3'- 9"	5'- 9"	4	12"	6'- 0"	4	12"	6'- 0"
5	5	14"	14"	8"	8"	10	10'- 0"	10	10'- 0"	3	3'- 0"	4	10"	10'- 7"	4	10"	11'- 8"	--	---	-----	-----	4	10"	2'- 4"	4'- 3"	6'- 3"	5	12"	7'- 0"	4	12"	7'- 0"
5	6	13¾"	13¾"	8"	8"	10	10'- 0"	10	10'- 0"	4	4'- 0"	4	10"	10'- 7"	4	10"	11'- 8"	--	---	-----	-----	4	10"	2'- 4"	4'- 8"	6'- 9"	5	9"	7'- 11"	4	12"	7'- 11"
5	7	14"	14"	8½"	8"	10	10'- 0"	10	10'- 0"	5	5'- 0"	4	10"	10'- 5"	4	10"	11'- 9"	--	---	-----	-----	5	10"	2'- 6"	5'- 4"	7'- 6"	6	10½"	9'- 0"	4	12"	9'- 0"
6	4	16½"	16½"	8"	8"	12	12'- 0"	12	12'- 0"	2	2'- 0"	5	9"	12'- 7"	4	9"	13'- 8"	--	---	-----	-----	4	9"	2'- 9"	3'- 11"	6'- 4"	4	12"	6'- 5"	4	10"	6'- 5"
6	5	16½"	16½"	8"	8"	12	12'- 0"	12	12'- 0"	3	3'- 0"	5	9"	12'- 7"	4	9"	13'- 8"	--	---	-----	-----	4	9"	2'- 9"	4'- 5"	6'- 10"	5	12"	7'- 5"	4	10"	7'- 5"
6	6	16½"	16½"	8"	8"	12	12'- 0"	12	12'- 0"	4	4'- 0"	5	9"	12'- 7"	4	9"	13'- 8"	--	---	-----	-----	4	9"	2'- 9"	4'- 11"	7'- 4"	5	9"	8'- 5"	4	10½"	8'- 5"
6	7	16½"	16½"	8"	8"	12	12'- 0"	12	12'- 0"	5	5'- 0"	5	9"	12'- 7"	4	9"	13'- 8"	3	9"	3'- 8"	7'- 1"	4	9"	2'- 9"	5'- 5"	7'- 10"	5	6½"	9'- 5"	4	10"	9'- 5"
6	8	16½"	16½"	9½"	8"	12	12'- 0"	12	12'- 0"	6	6'- 0"	5	9"	12'- 7"	4	9"	13'- 11"	--	---	-----	-----	5	9"	2'- 11"	6'- 1"	8'- 7"	7	11½"	10'- 5"	4	10½"	10'- 5"
7	4	19"	19"	8"	8"	14	14'- 0"	14	14'- 0"	2	2'- 0"	6	9"	14'- 7"	5	9"	15'- 8"	--	---	-----	-----	4	9"	3'- 2"	4'- 1"	7'- 0"	4	12"	6'- 9"	4	10"	6'- 9"
7	6	18¾"	18¾"	8"	8"	14	14'- 0"	14	14'- 0"	4	4'- 0"	5	8"	14'- 7"	5	8"	15'- 8"	--	---	-----	-----	4	8"	2'- 9"	5'- 1"	7'- 7"	5	9"	8'- 9"	4	10"	8'- 9"
7	8	18¾"	18¾"	9"	8"	14	14'- 0"	14	14'- 0"	6	6'- 0"	5	8"	14'- 9"	5	8"	15'- 9"	3	8"	4'- 0"	7'- 10"	4	8"	2'- 9"	6'- 1"	8'- 7"	6	7½"	10'- 9"	4	10"	10'- 9"
7	10	19"	19"	12"	8"	14	14'- 0"	14	14'- 0"	8	8'- 0"	5	8"	15'- 0"	5	8"	16'- 3"	3	8"	4'- 6"	8'- 8"	5	8"	2'- 11"	7'- 3"	9'- 10"	7	9"	12'- 9"	4	10"	12'- 9"
8	4	21½"	21½"	8"	8"	16	16'- 0"	16	16'- 0"	2	2'- 0"	6	9"	16'- 7"	5	9"	17'- 8"	--	---	-----	-----	4	9"	3'- 2"	4'- 4"	7'- 2"	4	12"	7'- 3"	4	10"	7'- 3"
8	6	21"	21"	8"	8"	16	16'- 0"	16	16'- 0"	4	4'- 0"	6	9"	16'- 7"	5	9"	17'- 8"	--	---	-----	-----	4	9"	3'- 2"	5'- 3"	8'- 2"	5	8½"	9'- 2"	4	10"	9'- 2"
8	8	21½"	21½"	9"	8"	16	16'- 0"	16	16'- 0"	6	6'- 0"	6	9"	16'- 6"	5	9"	17'- 9"	--	---	-----	-----	5	9"	3'- 4"	6'- 6"	9'- 5"	6	7½"	11'- 3"	4	10"	11'- 3"
8	10	21½"	21½"	12"	8"	16	16'- 0"	16	16'- 0"	8	8'- 0"	6	9"	16'- 9"	5	9"	18'- 3"	--	---	-----	-----	6	9"	3'- 5"	7'- 8"	10'- 8"	4	4"	13'- 3"	4	10"	13'- 3"
9	4	24"	24"	8"	8"	18	18'- 0"	18	18'- 0"	2	2'- 0"	7	9"	18'- 7"	6	9"	19'- 8"	--	---	-----	-----	4	9"	3'- 10"	4'- 6"	8'- 1"	4	12"	7'- 8"	4	9"	7'- 8"
9	6	24"	24"	8"	8"	18	18'- 0"	18	18'- 0"	4	4'- 0"	6	9"	18'- 7"	6	9"	19'- 8"	--	---	-----	-----	4	9"	3'- 2"	5'- 6"	8'- 5"	5	8"	9'- 8"	4	9"	9'- 8"
9	8	24"	24"	8"	8"	18	18'- 0"	18	18'- 0"	6	6'- 0"	6	9"	18'- 7"	6	9"	19'- 8"	4	9"	4'- 6"	8'- 8"	4	9"	3'- 2"	6'- 6"	9'- 5"	5	4½"	11'- 8"	4	9"	11'- 8"
9	10	24"	24"	11½"	8"	18	18'- 0"	18	18'- 0"	8	8'- 0"	6	9"	18'-11"	6	9"	20'- 3"	3	9"	4'- 10"	9'- 6"	5	9"	3'- 4"	7'- 9"	10'- 8"	6	6"	13'- 8"	4	9"	13'- 8"
9	12	24"	24"	14"	8"	18	18'- 0"	18	18'- 0"	10	10'- 0"	6	9"	18'-10"	6	9"	20'- 8"	3	9"	5'- 3"	10'- 4"	7	9"	3'- 7"	9'- 1"	12'- 2"	7	9½"	15'- 8"	4	9"	15'- 8"
10	4	26½"	26½"	8"	8"	20	20'- 0"	20	20'- 0"	2	2'- 0"	7	8"	20'- 7"	6	8"	21'- 8"	--	---	-----	-----	4	8"	3'- 10"	4'- 9"	8'- 3"	4	12"	8'- 0"	4	8"	8'- 0"
10	6	26½"	26½"	8"	8"	20	20'- 0"	20	20'- 0"	4	4'- 0"	6	8"	20'- 7"	6	8"	21'- 8"	--	---	-----	-----	4	8"	3'- 2"	5'- 9"	8'- 7"	6	12"	10'- 0"	4	8"	10'- 0"
10	8	26½"	26½"	8"	8"	20	20'- 0"	20	20'- 0"	6	6'- 0"	6	8"	20'- 7"	6	8"	21'- 8"	3	8"	4'- 8"	9'- 2"	4	8"	3'- 2"	6'- 9"	9'- 7"	5	4½"	12'- 0"	4	8"	12'- 0"
10	10	26½"	26½"	11"	8"	20	20'- 0"	20	20'- 0"	8	8'- 0"	6	8"	20'-10"	6	8"	22'- 2"	3	8"	5'- 1"	9'- 11"	5	8"	3'- 4"	7'- 11"	10'- 10"	8	11½"	14'- 0"	4	8"	14'- 0"
10	12	26"	26"	14"	8"	20	20'- 0"	20	20'- 0"	10	10'- 0"	7	9"	20'-10"	7	9"	22'- 8"	--	---	-----	-----	7	9"	4'- 3"	9'- 3"	13'- 0"	8	12"	16'- 0"	4	8"	16'- 0"
12	6	31½"	31½"	8"	8"	24	24'- 0"	24	24'- 0"	4	4'- 0"	8	9"	24'- 7"	6	9"	25'- 8"	--	---	-----	-----	4	9"	4'- 10"	6'- 2"	10'- 8"	6	10½"	10'- 11"	5	10½"	10'- 11"
12	8	31½"	31½"	8"	8"	24	24'- 0"	24	24'- 0"	6	6'- 0"	7	9"	24'- 7"	6	9"	25'- 8"	3	9"	5'- 1"	10'- 0"	4	9"	3'- 10"	7'- 2"	10'- 8"	8	9"	12'- 11"	5	10½"	12'- 11"
12	10	31½"	31½"	9¾"	8"	24	24'- 0"	24	24'- 0"	8	8'- 0"	7	9"	24'- 8"	6	9"	25'-11"	3	9"	5'- 6"	10'- 9"	5	9"	4'- 0"	8'- 4"	11'- 11"	6	5½"	14'- 11"	5	10½"	14'- 11"
12	12	31"	31"	13½"	8"	24	24'- 0"	24	24'- 0"	10	10'- 0"	8	9"	25'- 0"	7	9"	26'- 6"	3	9"	5'- 10"	11'- 6"	6	9"	5'- 1"	9'- 6"	14'- 1"	8	12"	16'- 9"	5	10½"	16'- 9"

A COPY OF THE ORIGINAL SEALED AND SIGNED DRAWING IS ON FILE IN THE CENTRAL OFFICE.

VDOT
ROAD AND BRIDGE STANDARDS

SHEET 1 OF 2 | REVISION DATE
1003.17 | 07/11

DOUBLE BOX CULVERTS

40 TO 50 FT. FILLS

VIRGINIA DEPARTMENT OF TRANSPORTATION

SPECIFICATION REFERENCE

BCD-50

FOR TYPICAL SECTION, NOTES AND OTHER DETAILS, REFER TO STANDARD BCD-DT.

SPAN (FT.)	HGHT (FT.)	REINFORCING STEEL BT1 SIZE	SPACING c-c	a	b	c	d	e	f	g	LENGTH	NO. BL1 #4 BARS	NO. BL2 #3 BARS	REINFORCING STEEL (LBS/LONG. JT)	QUAN./LF CONCRETE CLASS A4 (CY/LF)	REINFORCING STEEL (LBS/LF)	HEADWALLS G HEADWALL LENGTH	HW1 SIZE	HW1 LENGTH	NO. HW2 BARS	NO. HW3 BARS	INLET CONCRETE CL. A4 (CY)	INLET REINFORCING STEEL (LBS)	OUTLET CONCRETE CL. A4 (CY)	OUTLET REINFORCING STEEL (LBS)	WINGWALL
3	3	4	12"	2'- 6"	0'- 5¼"	1'- 10"	0'- 7"	0'- 4½"	7'- 8"	-----	7'- 11"	32	12	30.956	0.756	79.640	9'- 6"	6	9'- 2"	1	4	1.445	67.988	1.437	55.073	B
3	4	4	12"	2'- 6"	0'- 5¼"	1'- 10"	0'- 7"	0'- 4½"	7'- 8"	-----	7'- 11"	32	18	33.065	0.830	85.904	9'- 6"	6	9'- 2"	1	5	1.544	71.439	1.530	55.073	D
4	3	4	12"	3'- 1"	0'- 7½"	2'- 3"	0'-10⅛"	0'- 6¾"	9'- 8"	-----	10'- 1"	40	12	37.636	1.008	94.710	11'- 6"	6	11'- 2"	1	4	1.614	80.004	1.613	67.089	B
4	4	4	12"	3'- 1"	0'- 7½"	2'- 3"	0'-10⅛"	0'- 6¾"	9'- 8"	-----	10'- 1"	40	18	39.745	1.082	100.974	11'- 6"	6	11'- 2"	1	5	1.716	83.455	1.708	67.089	D
4	5	4	12"	3'- 1"	0'- 7¼"	2'- 3"	0'- 9¾"	0'- 6½"	9'- 8"	-----	10'- 1"	40	24	41.860	1.140	111.954	11'- 6"	6	11'- 2"	1	6	1.815	86.907	1.801	67.089	F
4	6	4	12"	3'- 1"	0'- 7¼"	2'- 3"	0'- 9¾"	0'- 6½"	9'- 8"	-----	10'- 1"	40	30	43.975	1.212	139.379	11'- 6"	6	11'- 2"	1	7	1.913	90.358	1.894	67.089	H
5	3	4	10"	3'- 8"	0'-10½"	2'- 8"	1'- 2⅜"	0'- 9¾"	11'- 8"	-----	12'- 4"	48	12	44.310	1.372	102.348	13'- 6"	6	13'- 2"	1	4	1.755	92.020	1.761	79.105	B
5	4	4	10"	3'- 8"	0'-10"	2'- 8"	1'- 1⅝"	0'- 9¼"	11'- 8"	-----	12'- 3"	48	18	46.425	1.408	108.467	13'- 6"	6	13'- 2"	1	5	1.854	95.471	1.853	79.105	D
5	5	4	10"	3'- 8"	0'-10"	2'- 8"	1'- 1⅝"	0'- 9¼"	11'- 8"	-----	12'- 3"	48	24	48.540	1.482	120.249	13'- 6"	6	13'- 2"	1	6	1.953	98.923	1.946	79.105	F
5	6	4	10"	3'- 8"	0'- 9¾"	2'- 8"	1'- 1¼"	0'- 9"	11'- 8"	-----	12'- 3"	48	30	50.655	1.536	132.826	13'- 6"	6	13'- 2"	1	7	2.052	102.374	2.039	79.105	H
5	7	4	10"	3'- 9"	0'-10"	2'- 8"	1'- 1⅝"	0'- 9¼"	11'- 9"	-----	12'- 4"	48	36	52.770	1.656	161.030	13'- 6"	6	13'- 2"	1	8	2.155	105.825	2.136	79.105	J
6	4	4	9"	4'- 4"	1'- 0½"	3'- 0"	1'- 5⅛"	0'-11¾"	13'- 8"	-----	14'- 5"	56	18	53.105	1.793	170.667	15'- 6"	6	15'- 2"	1	5	1.980	107.487	1.986	91.121	E
6	5	4	9"	4'- 4"	1'- 0½"	3'- 0"	1'- 5⅛"	0'-11¾"	13'- 8"	-----	14'- 5"	56	24	55.220	1.866	183.206	15'- 6"	6	15'- 2"	1	6	2.085	110.939	2.085	91.121	G
6	6	4	9"	4'- 4"	1'- 0½"	3'- 0"	1'- 5⅛"	0'-11¾"	13'- 8"	-----	14'- 5"	56	30	57.335	1.939	196.142	15'- 6"	6	15'- 2"	1	7	2.184	114.390	2.178	91.121	I
6	7	4	9"	4'- 4"	1'- 0½"	3'- 0"	1'- 5⅛"	0'-11¾"	13'- 8"	-----	14'- 5"	56	36	59.450	2.010	229.353	15'- 6"	6	15'- 2"	1	8	2.283	117.841	2.270	91.121	K
6	8	4	9"	4'- 5"	1'- 0½"	3'- 0"	1'- 5⅛"	0'-11¾"	13'- 11"	-----	14'- 8"	56	42	61.565	2.183	247.076	15'- 6"	6	15'- 2"	1	9	2.388	121.293	2.369	91.121	M
7	4	5	9"	4'- 11"	1'- 3"	3'- 5"	1'- 8⅝"	1'- 2⅛"	15'- 8"	-----	16'- 7"	64	18	59.785	2.238	242.577	17'- 6"	6	17'- 2"	1	5	2.072	119.503	2.085	103.137	E
7	6	5	8"	4'- 11"	1'- 2¾"	3'- 5"	1'- 8¼"	1'- 1⅞"	15'- 8"	-----	16'- 7"	64	30	64.015	2.359	269.293	17'- 6"	6	17'- 2"	1	7	2.255	126.406	2.255	103.137	I
7	8	4	8"	5'- 0"	1'- 2¾"	3'- 5"	1'- 8⅜"	1'- 2"	15'- 9"	-----	16'- 9"	64	42	68.245	2.573	308.734	17'- 6"	6	17'- 2"	1	9	2.453	133.309	2.441	103.137	M
7	10	4	8"	5'- 3"	1'- 3"	3'- 5"	1'- 8¾"	1'- 2¼"	16'- 3"	-----	17'- 3"	64	54	72.475	2.998	366.819	17'- 6"	6	17'- 2"	1	11	2.526	140.211	2.500	103.137	Q
8	4	6	9"	5'- 6"	1'- 5½"	3'- 10"	2'- 0"	1'- 4½"	17'- 8"	-----	18'- 9"	72	18	66.465	2.746	292.460	19'- 6"	6	19'- 2"	1	5	2.121	131.519	2.141	115.153	E
8	6	6	9"	5'- 7"	1'- 5"	3'- 10"	1'-11¼"	1'- 4"	17'- 8"	-----	18'- 9"	72	30	70.695	2.837	320.630	19'- 6"	6	19'- 2"	1	7	2.328	138.422	2.335	115.153	I
8	8	5	9"	5'- 7"	1'- 5½"	3'- 10"	2'- 0⅛"	1'- 4⅝"	17'- 9"	-----	18'- 11"	72	42	74.925	3.109	356.576	19'- 6"	6	19'- 2"	1	9	2.526	145.325	2.520	115.153	M
8	10	5	9"	5'- 10"	1'- 5½"	3'- 10"	2'- 0⅛"	1'- 4⅝"	18'- 3"	-----	19'- 5"	72	54	79.155	3.518	399.907	19'- 6"	6	19'- 2"	1	11	2.580	152.227	2.561	115.153	Q
9	4	6	9"	6'- 1"	1'- 8"	4'- 3"	2'- 3½"	1'- 7"	19'- 8"	-----	20'- 11"	80	18	73.145	3.314	376.717	21'- 6"	6	21'- 2"	1	5	2.148	143.535	2.173	127.169	F
9	6	6	9"	6'- 1"	1'- 8"	4'- 3"	2'- 3½"	1'- 7"	19'- 8"	-----	20'- 11"	80	30	77.375	3.462	379.124	21'- 6"	6	21'- 2"	1	7	2.356	150.438	2.369	127.169	J
9	8	6	9"	6'- 1"	1'- 8"	4'- 3"	2'- 3½"	1'- 7"	19'- 8"	-----	20'- 11"	80	42	81.605	3.604	456.056	21'- 6"	6	21'- 2"	1	9	2.564	157.341	2.565	127.169	N
9	10	6	9"	6'- 5"	1'- 8"	4'- 3"	2'- 3½"	1'- 7"	20'- 3"	-----	21'- 6"	80	54	85.835	4.052	501.203	21'- 6"	6	21'- 2"	1	11	2.614	164.243	2.601	127.169	R
9	12	6	9"	6'- 7"	1'- 8"	4'- 3"	2'- 3½"	1'- 7"	20'- 8"	-----	21'- 11"	80	66	90.065	4.483	586.026	21'- 6"	6	21'- 2"	1	13	2.669	171.146	2.643	127.169	V
10	4	6	8"	6'- 8"	1'-10½"	4'- 8"	2'- 7⅛"	1'- 9½"	21'- 8"	-----	23'- 1"	88	18	79.825	3.944	453.636	23'- 6"	6	23'- 2"	1	5	2.157	155.551	2.190	139.185	F
10	6	6	8"	6'- 8"	1'-10½"	4'- 8"	2'- 7⅛"	1'- 9½"	21'- 8"	-----	23'- 1"	88	30	84.055	4.093	449.514	23'- 6"	6	23'- 2"	1	7	2.355	162.454	2.375	139.185	J
10	8	6	8"	6'- 8"	1'-10½"	4'- 8"	2'- 7⅛"	1'- 9½"	21'- 8"	-----	23'- 1"	88	42	88.285	4.235	519.462	23'- 6"	6	23'- 2"	1	9	2.565	169.357	2.573	139.185	N
10	10	6	8"	6'- 11"	1'-10½"	4'- 8"	2'- 7⅛"	1'- 9½"	22'- 2"	-----	23'- 7"	88	54	92.515	4.646	575.846	23'- 6"	6	23'- 2"	1	11	2.611	176.259	2.605	139.185	R
10	12	7	9"	7'- 3"	1'-10"	4'- 8"	2'- 6¼"	1'- 8¾"	22'- 8"	-----	24'- 0"	88	66	96.745	5.054	710.678	23'- 6"	6	23'- 2"	1	13	2.663	183.162	2.644	139.185	V
12	6	7	9"	7'- 11"	2'- 3½"	5'- 5"	3'- 2"	2'- 2¼"	25'- 8"	-----	27'- 5"	104	30	97.415	5.537	609.729	27'- 6"	6	27'- 2"	1	7	2.259	186.486	2.292	163.217	K
12	8	7	9"	7'- 11"	2'- 3½"	5'- 5"	3'- 2"	2'- 2¼"	25'- 8"	-----	27'- 5"	104	42	101.645	5.682	652.348	27'- 6"	6	27'- 2"	1	9	2.472	193.389	2.493	163.217	O
12	10	7	9"	8'- 0"	2'- 3½"	5'- 5"	3'- 2"	2'- 2¼"	25'- 11"	-----	27'- 9"	104	54	105.875	5.991	700.081	27'- 6"	6	27'- 2"	1	11	2.509	200.291	2.516	163.217	S
12	12	7	9"	8'- 5"	2'- 3"	5'- 5"	3'- 1⅜"	2'- 1¾"	26'- 6"	-----	28'- 4"	104	66	110.105	6.467	837.137	27'- 6"	6	27'- 2"	1	13	2.544	207.194	2.538	163.217	W

A COPY OF THE ORIGINAL SEALED AND SIGNED DRAWING IS ON FILE IN THE CENTRAL OFFICE.

SPECIFICATION REFERENCE

DOUBLE BOX CULVERTS

40 TO 50 FT. FILL

VIRGINIA DEPARTMENT OF TRANSPORTATION

VDOT

ROAD AND BRIDGE STANDARDS

REVISION DATE 07/11

SHEET 2 OF 2

1003.18

BCT-DT

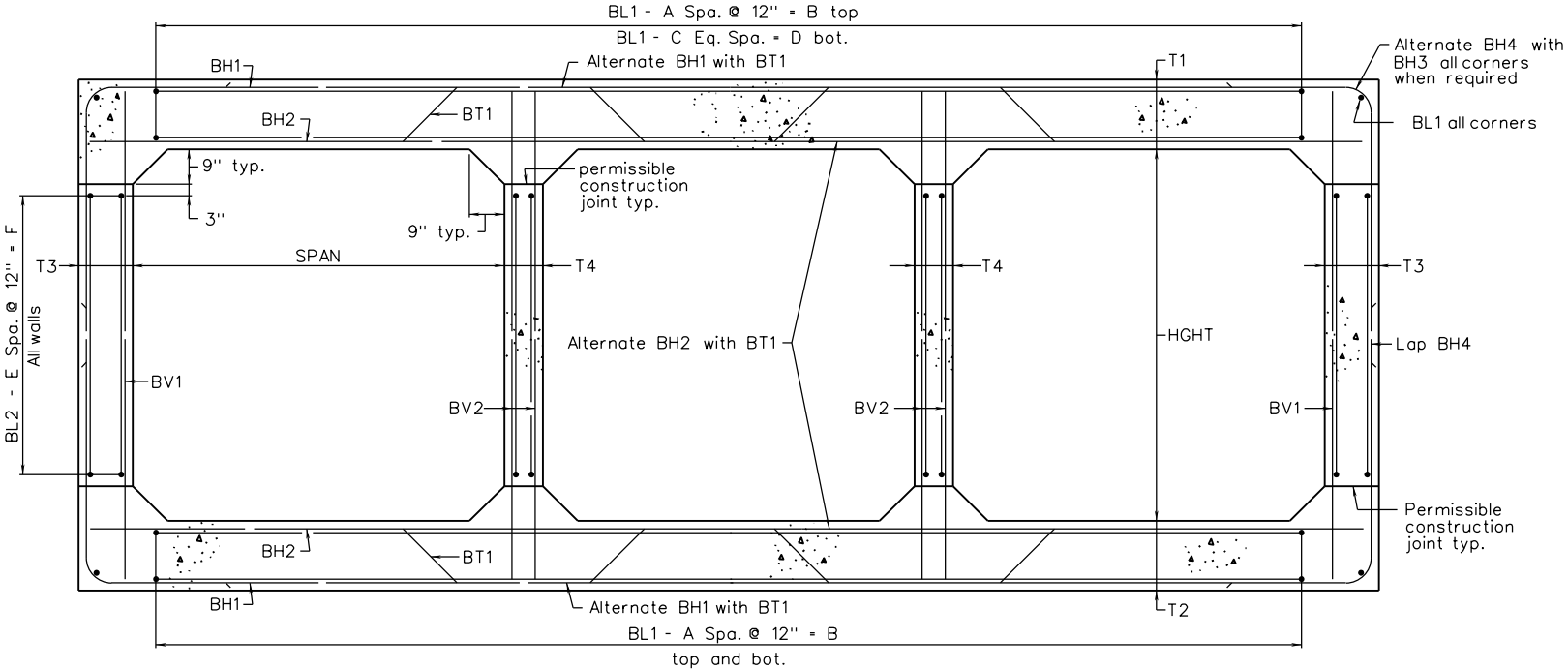

TYPICAL SECTION

A copy of the original sealed and signed drawing is on file in the central office.

VDOT ROAD AND BRIDGE STANDARDS	TRIPLE BOX CULVERTS STANDARD DETAILS VIRGINIA DEPARTMENT OF TRANSPORTATION	SPECIFICATION REFERENCE
SHEET 1 OF 3 / REVISION DATE		
1004.01 / 07/11		

GENERAL NOTE

Capacity: AASHTO HI-93 Loading.

Specifications:

Construction - Virginia Department of Transportation Road and Bridge Specifications.

Design - AASHTO LRFD Bridge Design Specifications, 5th Edition 2010; 2011 Interim Specifications; and VDOT Modifications.

All concrete shall be Class A4.

Deformed reinforcing bars shall conform to ASTM A615, Grade 60. All reinforcing bar dimensions on the detailed drawings are to centers of bars except where otherwise noted and are subject to fabrication and construction tolerances.

Construction joints shall be constructed and bonded in accordance with the current Road and Bridge Specifications.

Barrels more than 35' in length shall be poured in sections by providing vertical construction joints, not exceeding 25' between joints nor more than 30' from ends of barrels.

** All bends shall be made with a pin diameter as listed in TABLE A except for Bars BH3 and BH4 which shall have a pin diameter of 24 bar diameters.

Dimensions on bar diagrams are out-to-out of bars. Bars are straight and #4 size unless otherwise shown. BL2 shall be #3 size.

The number of BL1 and BL2 bars shown in the table is the number of longitudinal bars shown in the Typical Section and may not equal the total number of bars required. BL1 and BL2 shall have a lap of 30 bar diameters at splices. At construction joints, first placed bars shall project 30 bar diameters beyond the joint. Estimated QUAN./LF shown for reinforcing steel does not include quantity for laps of BL1 and BL2 bars. The additional weight per longitudinal lap is shown in the table.

The minimum cover of main reinforcing bars shall be 2½" from the face of the concrete for culverts under 0 to 2 foot fills and shall be 2" from the face of cencrete for all other culverts.

All reinforcing steel for culverts under 0 to 2 foot fills shall be Low Carbon/Chromium Reinforcing Steel conforming to ASTM A1035.

At the Contractor's option, BV1 and BV2 bars may be spliced at the permissible construction joint in order to facilitate construction. No additional compensation shall be provided for the increase in reinforcing steel quantity due to the splices.

Bar HW2 shall be 4" less than culvert height in length.

Headwall quantities shown assume wingwalls are to be built at a 45° angle to the headwall.

The designs are applicable to the fill height and other conditions indicated. Any change in the conditions invalidates these designs.

Wingwalls referenced by letter apply when the acceptable foundation level is the same for both box and wings. If foundation levels are different, the height of the wingwall shall be adjusted by selection of another lettered wingwall of appropriate height. For wingwall details, refer to standard series BCW for the appropriate fill slope.

For details of extending existing boxes, refer to Standard BCE-01.

For modification of details for skewed culverts, see the skewed box details included in the road plans.

This standard shall be used with the BCT standard series.

A COPY OF THE ORIGINAL SEALED AND SIGNED DRAWING IS ON FILE IN THE CENTRAL OFFICE.

SPECIFICATION REFERENCE	TRIPLE BOX CULVERTS STANDARD DETAILS VIRGINIA DEPARTMENT OF TRANSPORTATION	VDOT ROAD AND BRIDGE STANDARDS	
		REVISION DATE	SHEET 2 OF 3
		07/12	1004.02

BCT-DT

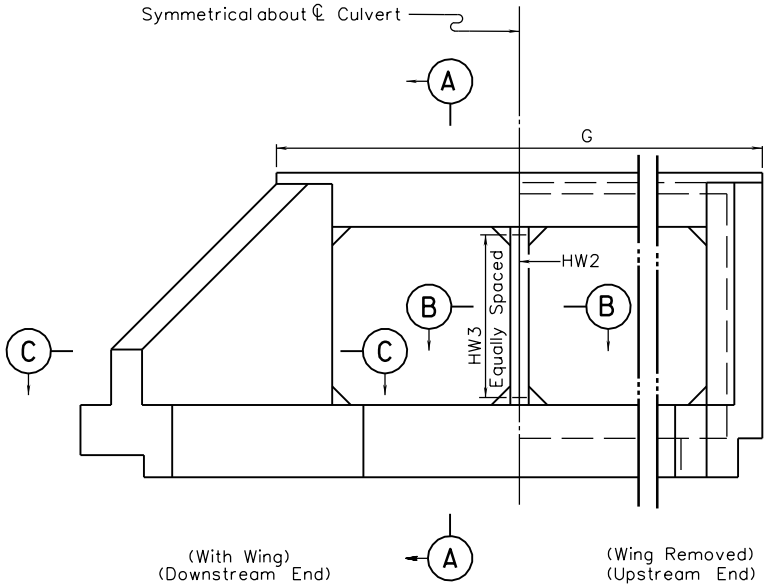

END ELEVATION

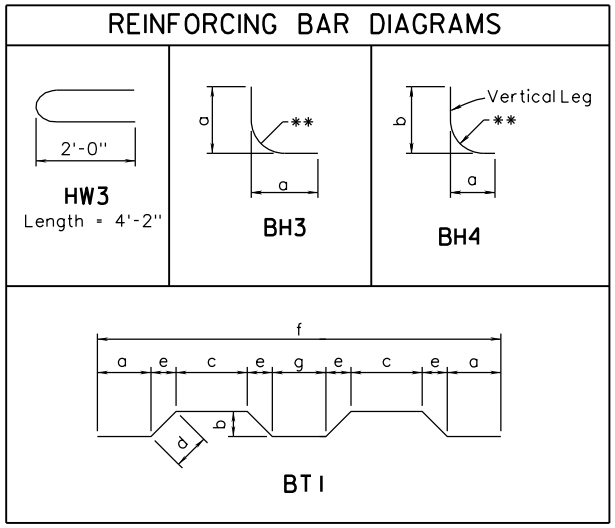

TABLE A	
Bar Size	Pin Dia.
#3	2¼"
#4	3"
#5	3¾"
#6	4½"
#7	5¼"
#8	6"
#9	9"

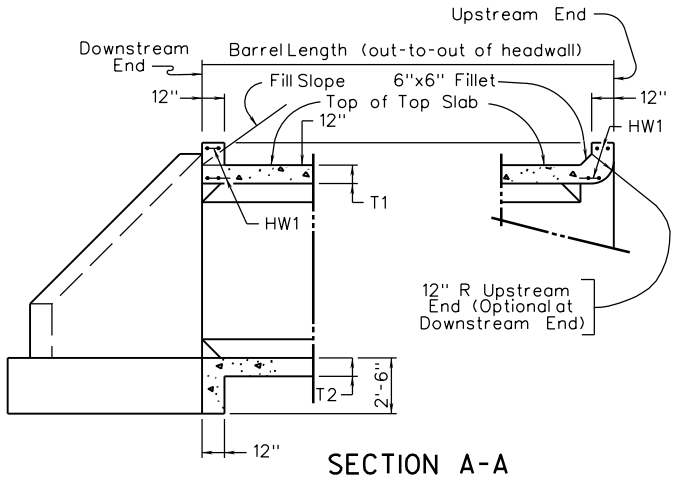

SECTION A-A
(With Wing)

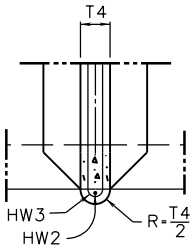

PART SECTION B-B
UPSTREAM END
(Optional at Downstream End)

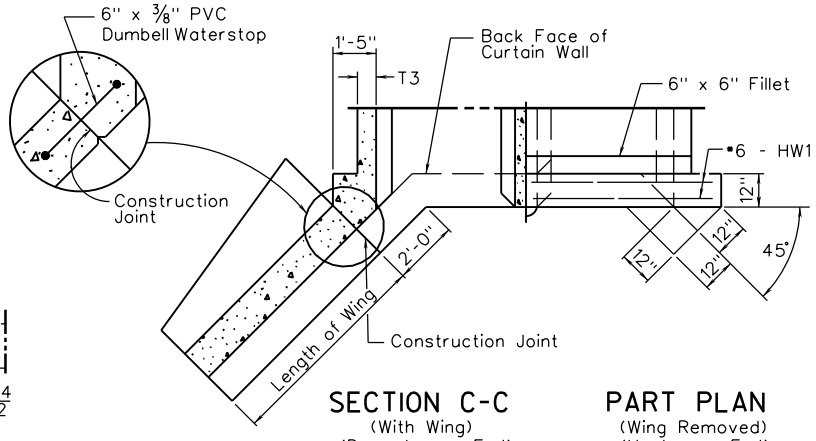

SECTION C-C
(With Wing)
(Downstream End)

PART PLAN
(Wing Removed)
(Upstream End)

VDOT
ROAD AND BRIDGE STANDARDS

SHEET 3 OF 3
1004.03

REVISION DATE
07/11

TRIPLE BOX CULVERTS

STANDARD DETAILS

VIRGINIA DEPARTMENT OF TRANSPORTATION

SPECIFICATION REFERENCE

BCT-DT

THIS PAGE INTENTIONALLY LEFT BLANK

SPECIFICATION REFERENCE	TRIPLE BOX CULVERTS STANDARD DETAILS VIRGINIA DEPARTMENT OF TRANSPORTATION	VDOT ROAD AND BRIDGE STANDARDS	
		REVISION DATE 07/11	SHEET 1 OF 1 1004.04

BCT-02

FOR TYPICAL SECTION, NOTES AND OTHER DETAILS, REFER TO STANDARD BCT-DT.

DIMENSIONS						REINFORCING STEEL																										
SPAN	HGHT	T1	T2	T3	T4							BH1			BH2			BH3				BH4					BV1			BV2		
(FT.)	(FT.)	TOP SLAB	BOTTOM SLAB	EXTERIOR WALL (IN.)	INTERIOR WALL (IN.)	A	B	C	D	E	F	SIZE	SPACING C-C	LENGTH	SIZE	SPACING C-C	LENGTH	SIZE	SPACING C-C	a	LENGTH	SIZE	SPACING C-C	a	b	LENGTH	SIZE	SPACING C-C	LENGTH	SIZE	SPACING C-C	LENGTH
3	3	8"	8"	8"	8"	9	9'- 0"	18	9'- 0"	1	1'- 0"	4	12"	11'- 2"	4	12"	11'- 4"	--	---	-----	-----	4	12"	2'- 1¼"	2'- 8"	4'-6"	4	12"	4'- 0"	4	12"	4'- 0"
3	4	8"	8"	8"	8"	9	9'- 0"	18	9'- 0"	2	2'- 0"	4	12"	11'- 2"	4	12"	11'- 4"	--	---	-----	-----	4	12"	2'- 1¼"	3'- 2"	5'-0"	4	12"	5'- 0"	4	12"	5'- 0"
4	3	8¼"	8¼"	8"	8"	12	12'- 0"	24	12'- 0"	1	1'- 0"	4	12"	13'- 9"	4	12"	14'- 4"	4	12"	2'- 3⅝"	4'- 4"	4	12"	2'- 3⅝"	2'- 8¼"	4'-9"	4	12"	4'- 0"	4	12"	4'- 0"
4	4	8¼"	8¼"	8"	8"	12	12'- 0"	24	12'- 0"	2	2'- 0"	4	12"	13'- 9"	4	12"	14'- 4"	4	12"	2'- 3⅝"	4'- 4"	4	12"	2'- 3⅝"	3'- 2¼"	5'-3"	4	12"	5'- 0"	4	12"	5'- 0"
4	5	8¼"	8¼"	8"	8"	12	12'- 0"	24	12'- 0"	3	3'- 0"	4	12"	13'- 9"	4	12"	14'- 4"	4	12"	2'- 6"	4'- 9"	4	12"	2'- 3⅝"	3'- 8¼"	5'-9"	4	12"	6'- 0"	4	12"	6'- 0"
4	6	8¼"	8¼"	8"	8"	12	12'- 0"	24	12'- 0"	4	4'- 0"	4	12"	13'- 9"	4	12"	14'- 4"	4	12"	2'- 9"	5'- 5"	4	12"	2'- 3⅝"	4'- 2¼"	6'-3"	4	12"	7'- 0"	4	12"	7'- 0"
5	3	8¼"	8¼"	8"	8"	15	15'- 0"	30	15'- 0"	1	1'- 0"	4	11"	16'- 4"	5	11"	17'- 4"	4	11"	2'- 6"	4'- 9"	4	11"	2'- 6"	2'- 8¼"	4'-11"	4	12"	4'- 0"	4	12"	4'- 0"
5	4	8¼"	8¼"	8"	8"	15	15'- 0"	30	15'- 0"	2	2'- 0"	4	10"	16'- 4"	4	10"	17'- 4"	4	10"	2'- 6"	4'- 9"	4	10"	2'- 6"	3'- 2¼"	5'-5"	4	12"	5'- 0"	4	10"	5'- 0"
5	5	8¼"	8¼"	8"	8"	15	15'- 0"	30	15'- 0"	3	3'- 0"	4	10"	16'- 4"	4	10"	17'- 4"	4	10"	2'- 6"	4'- 9"	4	10"	2'- 6"	3'- 8¼"	5'-11"	4	12"	6'- 0"	4	10"	6'- 0"
5	6	8¼"	8¼"	8"	8"	15	15'- 0"	30	15'- 0"	4	4'- 0"	4	10"	16'- 4"	4	10"	17'- 4"	4	10"	2'- 9"	5'- 5"	4	10"	2'- 6"	4'- 2¼"	6'-5"	4	12"	7'- 0"	4	10"	7'- 0"
5	7	8¼"	8¼"	8"	8"	15	15'- 0"	30	15'- 0"	5	5'- 0"	4	9"	16'- 4"	4	9"	17'- 4"	4	9"	2'-11"	5'- 8"	4	9"	2'- 6"	4'- 8¼"	6'-11"	4	12"	8'- 0"	4	10"	8'- 0"
6	4	9¾"	9¾"	8"	8"	18	18'- 0"	36	18'- 0"	2	2'- 0"	4	11"	19'- 3"	4	11"	20'- 4"	4	11"	2'- 8⅜"	5'- 2"	4	11"	2'- 8⅜"	3'- 3¾"	5'-9"	4	12"	5'- 3"	4	10"	5'- 3"
6	5	9¾"	9¾"	8"	8"	18	18'- 0"	36	18'- 0"	3	3'- 0"	4	10"	19'- 3"	4	10"	20'- 4"	4	10"	2'- 8⅜"	5'- 2"	4	10"	2'- 8⅜"	3'- 9¾"	6'-3"	4	12"	6'- 3"	4	10"	6'- 3"
6	6	9¾"	9¾"	8"	8"	18	18'- 0"	36	18'- 0"	4	4'- 0"	4	10"	19'- 3"	4	10"	20'- 4"	4	10"	2'-11"	5'- 8"	4	10"	2'- 8⅜"	4'- 3¾"	6'-9"	4	12"	7'- 3"	4	10"	7'- 3"
6	7	9¾"	9¾"	8"	8"	18	18'- 0"	36	18'- 0"	5	5'- 0"	4	9"	19'- 3"	4	9"	20'- 4"	4	9"	3'- 1"	5'-11"	4	9"	2'- 8⅜"	4'- 9¾"	7'-3"	4	12"	8'- 3"	4	10"	8'- 3"
6	8	9¾"	9¾"	8"	8"	18	18'- 0"	36	18'- 0"	6	6'- 0"	4	9"	19'- 3"	4	9"	20'- 4"	4	9"	3'- 4"	6'- 5"	4	9"	2'- 8⅜"	5'- 3¾"	7'-9"	4	12"	9'- 3"	4	10"	9'- 3"
7	4	9½"	9½"	8"	8"	21	21'- 0"	42	21'- 0"	2	2'- 0"	4	9"	22'- 3"	4	9"	23'- 4"	4	9"	2'-10¾"	5'- 6"	4	9"	2'-10¾"	3'- 3½"	5'-11"	4	12"	5'- 3"	4	9½"	5'- 3"
7	6	9½"	9½"	8"	8"	21	21'- 0"	42	21'- 0"	4	4'- 0"	4	9"	22'- 3"	5	9"	23'- 4"	4	9"	2'-10¾"	5'- 6"	4	9"	2'-10¾"	4'- 3½"	6'-11"	4	12"	7'- 3"	4	8½"	7'- 3"
7	8	9¾"	9¾"	8"	8"	21	21'- 0"	42	21'- 0"	6	6'- 0"	4	8"	22'- 3"	4	8"	23'- 4"	4	8"	3'- 4"	6'- 5"	4	8"	2'-10¾"	5'- 3¾"	7'-11"	4	12"	9'- 3"	4	9"	9'- 3"
7	10	9¾"	9¾"	8"	8"	21	21'- 0"	42	21'- 0"	8	8'- 0"	4	8"	22'- 3"	4	8"	23'- 4"	4	8"	3'- 8"	6'-11"	4	8"	2'-10¾"	6'- 3¾"	8'-11"	4	12"	11'- 3"	4	9"	11'- 3"
8	4	9"	9"	8"	8"	24	24'- 0"	48	24'- 0"	2	2'- 0"	4	8"	25'- 0"	4	8"	26'- 4"	4	8"	3'- 1¼"	5'-11"	4	8"	3'- 1¼"	3'- 3"	6'-1"	4	12"	5'- 2"	4	7½"	5'- 2"
8	6	9"	9"	8"	8"	24	24'- 0"	48	24'- 0"	4	4'- 0"	5	12"	25'- 0"	5	12"	26'- 4"	5	12"	3'- 1¼"	5'-11"	5	12"	3'- 1¼"	4'- 3"	7'-0"	4	12"	7'- 2"	4	7"	7'- 2"
8	8	9¼"	9¼"	8"	8"	24	24'- 0"	48	24'- 0"	6	6'- 0"	5	11"	25'- 0"	5	11"	26'- 4"	5	11"	3'- 4"	6'- 5"	5	11"	3'- 1¼"	5'- 3¼"	8'-1"	4	12"	9'- 2"	4	7"	9'- 2"
8	10	9¾"	9¾"	8"	8"	24	24'- 0"	48	24'- 0"	8	8'- 0"	5	10"	25'- 0"	5	10"	26'- 4"	5	10"	3'- 8"	6'-11"	5	10"	3'- 1¼"	6'- 3¾"	9'-1"	4	12"	11'- 3"	4	7½"	11'- 3"
9	4	9¼"	9¼"	8"	8"	27	27'- 0"	54	27'- 0"	2	2'- 0"	5	11"	28'- 0"	5	11"	29'- 4"	4	11"	3'- 3⅝"	6'- 4"	6	11"	3'-10"	3'- 7"	7'-0"	4	12"	5'- 2"	4	6½"	5'- 2"
9	6	9½"	9½"	8"	8"	27	27'- 0"	54	27'- 0"	4	4'- 0"	5	10"	28'- 0"	5	10"	29'- 4"	4	10"	3'- 3⅝"	6'- 4"	5	10"	3'- 3⅝"	4'- 3½"	7'-3"	4	12"	7'- 3"	4	6½"	7'- 3"
9	8	9½"	9½"	8"	8"	27	27'- 0"	54	27'- 0"	6	6'- 0"	5	10"	28'- 0"	5	10"	29'- 4"	5	10"	3'- 3⅝"	6'- 3"	5	10"	3'- 3⅝"	5'- 3½"	8'-3"	4	12"	9'- 3"	4	6½"	9'- 3"
9	10	9½"	9½"	8"	8"	27	27'- 0"	54	27'- 0"	8	8'- 0"	5	9"	28'- 0"	5	9"	29'- 4"	5	9"	3'- 8"	6'-11"	5	9"	3'- 3⅝"	6'- 3½"	9'-3"	4	12"	11'- 3"	4	6½"	11'- 3"
9	12	9¾"	9¾"	8"	8"	27	27'- 0"	54	27'- 0"	10	10'- 0"	6	12"	28'- 0"	6	12"	29'- 4"	6	12"	4'- 1"	7'-11"	6	12"	3'-10"	7'- 7"	11'-1"	5	11½"	13'- 3"	4	6½"	13'- 3"
10	4	9½"	9½"	8"	8"	30	30'- 0"	60	30'- 0"	2	2'- 0"	5	9"	31'- 0"	5	9"	32'- 4"	--	---	-----	-----	5	9"	3'- 6"	3'- 3½"	6'-6"	4	12"	5'- 3"	5	9½"	5'- 3"
10	6	9½"	9½"	8"	8"	30	30'- 0"	60	30'- 0"	4	4'- 0"	5	10"	31'- 0"	5	10"	32'- 4"	4	10"	3'- 6"	6'- 9"	5	10"	3'- 6"	4'- 3½"	7'-6"	4	12"	7'- 3"	5	9½"	7'- 3"
10	8	9½"	9½"	8"	8"	30	30'- 0"	60	30'- 0"	6	6'- 0"	5	9"	31'- 0"	5	9"	32'- 4"	4	9"	3'- 6"	6'- 9"	5	9"	3'- 6"	5'- 3½"	8'-6"	4	12"	9'- 3"	5	9½"	9'- 3"
10	10	9¾"	9¾"	8"	8"	30	30'- 0"	60	30'- 0"	8	8'- 0"	5	9"	31'- 0"	5	9"	32'- 4"	4	9"	3'- 8"	6'-11"	5	9"	3'- 6"	6'- 3¾"	9'-6"	4	12"	11'- 3"	4	6½"	11'- 3"
10	12	9¾"	9¾"	8"	8"	30	30'- 0"	60	30'- 0"	10	10'- 0"	6	12"	31'- 0"	6	12"	32'- 4"	4	12"	4'- 1"	7'-11"	6	12"	4'- 0"	7'- 7"	11'-3"	5	11½"	13'- 3"	4	7"	13'- 3"
12	6	10"	10"	8"	8"	36	36'- 0"	72	36'- 0"	4	4'- 0"	5	9"	37'- 0"	5	9"	38'- 4"	--	---	-----	-----	6	9"	4'- 5"	4'- 8"	8'- 8"	4	12"	7'- 4"	5	8"	7'- 4"
12	8	10"	10"	8"	8"	36	36'- 0"	72	36'- 0"	6	6'- 0"	6	12"	37'- 0"	6	12"	38'- 4"	--	---	-----	-----	7	12"	4'-10"	5'-11"	10'- 3"	4	12"	9'- 4"	5	8"	9'- 4"
12	10	10"	10"	8"	8"	36	36'- 0"	72	36'- 0"	8	8'- 0"	5	8"	37'- 0"	5	8"	38'- 4"	4	8"	3'-10¾"	7'- 6"	5	8"	3'-10¾"	6'- 4"	9'-11"	4	12"	11'- 4"	4	5½"	11'- 4"
12	12	10¼"	10¼"	8"	8"	36	36'- 0"	72	36'- 0"	10	10'- 0"	6	11"	37'- 0"	6	11"	38'- 4"	4	11"	4'- 1"	7'-11"	6	11"	4'- 5"	7'- 8"	11'- 8"	5	11½"	13'- 5"	4	6"	13'- 5"

A COPY OF THE ORIGINAL SEALED AND SIGNED DRAWING IS ON FILE IN THE CENTRAL OFFICE.

VDOT
ROAD AND BRIDGE STANDARDS

SHEET 1 OF 2 | REVISION DATE
1004.05 | 07/11

TRIPLE BOX CULVERTS

0 TO 2 FT. FILLS

VIRGINIA DEPARTMENT OF TRANSPORTATION

SPECIFICATION REFERENCE

BCT-02

FOR TYPICAL SECTION, NOTES AND OTHER DETAILS, REFER TO STANDARD BCT-DT.

SPAN (FT.)	HGHT (FT.)	REINFORCING STEEL BT1 SIZE	SPACING c-c	a	b	c	d	e	f	g	LENGTH	NO. BL1 #4 BARS	NO. BL2 #3 BARS	REINFORCING STEEL (LBS/LONG. JT)	QUAN./LF CONCRETE CLASS A4 (CY/LF)	REINFORCING STEEL (LBS/LF)	HEADWALLS G HEADWALL LENGTH	HW1 SIZE	HW1 LENGTH	NO. HW2 BARS	NO. HW3 BARS	INLET CONCRETE CL. A4 (CY)	INLET REINFORCING STEEL (LBS)	OUTLET CONCRETE CL. A4 (CY)	OUTLET REINFORCING STEEL (LBS)	WINGWALL
3	3	4	12"	2'- 8 7/8"	0'- 4 1/2"	1'- 6 5/8"	0'- 5 7/8"	0'- 3 3/4"	11'- 3 7/8"	1'- 5 7/8"	11'-10"	53	16	49.903	0.989	115.345	13'- 2"	6	12'-10"	2	8	1.827	102.932	1.808	77.103	A
3	4	4	12"	2'- 8 7/8"	0'- 4 1/2"	1'- 6 5/8"	0'- 5 7/8"	0'- 3 3/4"	11'- 3 7/8"	1'- 5 7/8"	11'-10"	53	24	52.727	1.087	123.697	13'- 2"	6	12'-10"	2	10	1.932	109.835	1.901	77.103	C
4	3	4	12"	3'- 6 3/8"	0'- 4 3/4"	1'-11 1/4"	0'- 6 1/4"	0'- 4"	14'- 4"	2'- 3/4"	14'-11"	68	16	62.428	1.157	149.191	16'- 2"	6	15'-10"	2	8	2.124	120.956	2.115	95.127	A
4	4	4	12"	3'- 6 3/8"	0'- 4 3/4"	1'-11 1/4"	0'- 6 1/4"	0'- 4"	14'- 4"	2'- 3/4"	14'-11"	68	24	65.252	1.255	157.543	16'- 2"	6	15'-10"	2	10	2.229	127.859	2.208	95.127	C
4	5	4	12"	3'- 6 3/8"	0'- 4 3/4"	1'-11 1/4"	0'- 6 1/4"	0'- 4"	14'- 4"	2'- 3/4"	14'-11"	68	32	68.076	1.353	171.947	16'- 2"	6	15'-10"	2	12	2.334	134.761	2.300	95.127	E
4	6	4	12"	3'- 6 3/8"	0'- 4 3/4"	1'-11 1/4"	0'- 6 1/4"	0'- 4"	14'- 4"	2'- 3/4"	14'-11"	68	40	70.900	1.451	182.365	16'- 2"	6	15'-10"	2	14	2.440	141.664	2.393	95.127	G
5	3	4	11"	4'- 4"	0'- 4 3/4"	2'- 4"	0'- 6 1/4"	0'- 4"	17'- 4"	2'- 8"	17'-11"	83	16	74.953	1.306	195.032	19'- 2"	6	18'-10"	2	8	2.425	138.980	2.426	113.151	A
5	4	4	10"	4'- 4"	0'- 4 3/4"	2'- 4"	0'- 6 1/4"	0'- 4"	17'- 4"	2'- 8"	17'-11"	83	24	77.777	1.404	202.477	19'- 2"	6	18'-10"	2	10	2.531	145.883	2.519	113.151	C
5	5	4	10"	4'- 4"	0'- 4 3/4"	2'- 4"	0'- 6 1/4"	0'- 4"	17'- 4"	2'- 8"	17'-11"	83	32	80.601	1.503	211.630	19'- 2"	6	18'-10"	2	12	2.636	152.785	2.611	113.151	E
5	6	4	10"	4'- 4"	0'- 4 3/4"	2'- 4"	0'- 6 1/4"	0'- 4"	17'- 4"	2'- 8"	17'-11"	83	40	83.425	1.600	229.318	19'- 2"	6	18'-10"	2	14	2.741	159.688	2.704	113.151	G
5	7	4	9"	4'- 4"	0'- 4 3/4"	2'- 4"	0'- 6 1/4"	0'- 4"	17'- 4"	2'- 8"	17'-11"	83	48	86.249	1.697	258.484	19'- 2"	6	18'-10"	2	16	2.846	166.591	2.797	113.151	I
6	4	4	11"	5'- 7/8"	0'- 6 1/4"	2'- 7 1/4"	0'- 8 3/8"	0'- 5 1/2"	20'- 4"	3'- 1 3/4"	21'- 1"	98	24	90.302	1.747	218.090	22'- 2"	6	21'-10"	2	10	2.784	163.907	2.782	131.175	D
6	5	4	10"	5'- 7/8"	0'- 6 1/4"	2'- 7 1/4"	0'- 8 3/8"	0'- 5 1/2"	20'- 4"	3'- 1 3/4"	21'- 1"	98	32	93.126	1.844	246.684	22'- 2"	6	21'-10"	2	12	2.889	170.809	2.875	131.175	F
6	6	4	10"	5'- 7/8"	0'- 6 1/4"	2'- 7 1/4"	0'- 8 3/8"	0'- 5 1/2"	20'- 4"	3'- 1 3/4"	21'- 1"	98	40	95.950	1.942	257.738	22'- 2"	6	21'-10"	2	14	2.994	177.712	2.968	131.175	H
6	7	4	9"	5'- 7/8"	0'- 6 1/4"	2'- 7 1/4"	0'- 8 3/8"	0'- 5 1/2"	20'- 4"	3'- 1 3/4"	21'- 1"	98	48	98.774	2.039	285.731	22'- 2"	6	21'-10"	2	16	3.099	184.615	3.060	131.175	J
6	8	4	9"	5'- 7/8"	0'- 6 1/4"	2'- 7 1/4"	0'- 8 3/8"	0'- 5 1/2"	20'- 4"	3'- 1 3/4"	21'- 1"	98	56	101.598	2.137	297.193	22'- 2"	6	21'-10"	2	18	3.204	191.517	3.153	131.175	L
7	4	4	9"	5'-10 5/8"	0'- 6"	3'- 3/8"	0'- 8"	0'- 5 1/4"	23'- 4 1/8"	3'- 9 1/8"	24'- 1"	113	24	102.827	1.885	287.324	25'- 2"	6	24'-10"	2	10	3.085	181.931	3.093	149.199	D
7	6	4	9"	5'-10 5/8"	0'- 6"	3'- 3/8"	0'- 8"	0'- 5 1/4"	23'- 4 1/8"	3'- 9 1/8"	24'- 1"	113	40	108.475	2.081	328.424	25'- 2"	6	24'-10"	2	14	3.295	195.736	3.278	149.199	H
7	8	4	8"	5'-10 1/2"	0'- 6 1/4"	3'- 1/8"	0'- 8 3/8"	0'- 5 1/2"	23'- 4 1/8"	3'- 8 7/8"	24'- 1"	113	56	114.123	2.313	348.715	25'- 2"	6	24'-10"	2	18	3.492	209.541	3.450	149.199	L
7	10	4	8"	5'-10 1/2"	0'- 6 1/4"	3'- 1/8"	0'- 8 3/8"	0'- 5 1/2"	23'- 4 1/8"	3'- 8 7/8"	24'- 1"	113	72	119.771	2.509	371.229	25'- 2"	6	24'-10"	2	22	3.702	223.347	3.636	149.199	P
8	4	4	8"	6'- 8 3/8"	0'- 5 1/2"	3'- 5 5/8"	0'- 7 1/4"	0'- 4 3/4"	26'- 3 7/8"	4'- 4 7/8"	27'- 0"	128	24	115.352	1.976	337.721	28'- 2"	6	27'-10"	2	10	3.387	199.955	3.405	167.223	C
8	6	5	12"	6'- 8 3/8"	0'- 5 5/8"	3'- 5 5/8"	0'- 7 3/8"	0'- 4 3/4"	26'- 3 7/8"	4'- 4 7/8"	27'- 0"	128	40	121.000	2.171	368.255	28'- 2"	6	27'-10"	2	14	3.597	213.760	3.591	167.223	G
8	8	5	11"	6'- 8 1/4"	0'- 5 7/8"	3'- 5 3/8"	0'- 7 3/4"	0'- 5"	26'- 3 7/8"	4'- 4 5/8"	27'- 0"	128	56	126.648	2.406	415.143	28'- 2"	6	27'-10"	2	18	3.810	227.565	3.779	167.223	L
8	10	5	10"	6'- 8"	0'- 6 3/8"	3'- 4 7/8"	0'- 8 3/8"	0'- 5 1/2"	26'- 3 7/8"	4'- 4 1/8"	27'- 1"	128	72	132.296	2.683	460.552	28'- 2"	6	27'-10"	2	22	3.989	241.371	3.933	167.223	P
9	4	5	11"	7'- 5 7/8"	0'- 5 7/8"	3'-10 1/4"	0'- 7 3/4"	0'- 5"	29'- 4"	4'-11 3/4"	30'- 0"	143	24	127.877	2.183	409.438	31'- 2"	6	30'-10"	2	10	3.682	217.979	3.710	185.247	D
9	6	5	10"	7'- 5 3/4"	0'- 6 1/8"	3'-10"	0'- 8 1/8"	0'- 5 1/4"	29'- 4"	4'-11 1/2"	30'- 1"	143	40	133.525	2.424	439.558	31'- 2"	6	30'-10"	2	14	3.874	231.784	3.877	185.247	H
9	8	5	10"	7'- 5 3/4"	0'- 6 1/8"	3'-10"	0'- 8 1/8"	0'- 5 1/4"	29'- 4"	4'-11 1/2"	30'- 1"	143	56	139.173	2.619	474.426	31'- 2"	6	30'-10"	2	18	4.084	245.589	4.063	185.247	L
9	10	5	9"	7'- 5 3/4"	0'- 6 1/8"	3'-10"	0'- 8 1/8"	0'- 5 1/4"	29'- 4"	4'-11 1/2"	30'- 1"	143	72	144.821	2.812	534.465	31'- 2"	6	30'-10"	2	22	4.295	259.395	4.248	185.247	P
9	12	6	12"	7'- 5 5/8"	0'- 6 1/2"	3'- 9 3/4"	0'- 8 1/2"	0'- 5 1/2"	29'- 4"	4'-11 1/4"	30'- 1"	143	88	150.469	3.050	605.750	31'- 2"	6	30'-10"	2	26	4.487	273.200	4.416	185.247	T
10	4	5	9"	8'- 3 3/8"	0'- 6 1/8"	4'- 2 3/4"	0'- 8 1/8"	0'- 5 1/4"	32'- 4"	5'- 6 3/4"	33'- 1"	158	24	140.402	2.401	460.612	34'- 2"	6	33'-10"	2	10	3.953	236.003	3.991	203.271	D
10	6	5	10"	8'- 3 3/8"	0'- 6 1/8"	4'- 2 3/4"	0'- 8 1/8"	0'- 5 1/4"	32'- 4"	5'- 6 3/4"	33'- 1"	158	40	146.050	2.597	477.560	34'- 2"	6	33'-10"	2	14	4.164	249.808	4.177	203.271	H
10	8	5	9"	8'- 3 3/8"	0'- 6 1/8"	4'- 2 3/4"	0'- 8 1/8"	0'- 5 1/4"	32'- 4"	5'- 6 3/4"	33'- 1"	158	56	151.698	2.790	535.891	34'- 2"	6	33'-10"	2	18	4.374	263.613	4.362	203.271	L
10	10	5	9"	8'- 3 1/4"	0'- 6 3/8"	4'- 2 1/2"	0'- 8 3/8"	0'- 5 1/2"	32'- 4"	5'- 6 1/2"	33'- 1"	158	72	157.346	3.037	558.313	34'- 2"	6	33'-10"	2	22	4.564	277.419	4.527	203.271	P
10	12	6	12"	8'- 3 1/4"	0'- 6 1/2"	4'- 2 1/2"	0'- 8 1/2"	0'- 5 1/2"	32'- 4"	5'- 6 1/2"	33'- 1"	158	88	162.994	3.229	624.268	34'- 2"	6	33'-10"	2	26	4.774	291.224	4.713	203.271	T
12	6	5	9"	9'-10 3/8"	0'- 6 5/8"	4'-11 7/8"	0'- 8 3/4"	0'- 5 3/4"	38'- 4 1/8"	6'- 8 5/8"	39'- 1"	188	40	171.100	3.060	593.399	40'- 2"	6	39'-10"	2	14	4.693	285.856	4.726	239.319	H
12	8	6	12"	9'-10 3/8"	0'- 6 3/4"	4'-11 7/8"	0'- 8 7/8"	0'- 5 3/4"	38'- 4 1/8"	6'- 8 5/8"	39'- 1"	188	56	176.748	3.253	652.706	40'- 2"	6	39'-10"	2	18	4.903	299.661	4.912	239.319	L
12	10	5	8"	9'-10 3/8"	0'- 6 5/8"	4'-11 7/8"	0'- 8 3/4"	0'- 5 3/4"	38'- 4 1/8"	6'- 8 5/8"	39'- 1"	188	72	182.396	3.446	703.628	40'- 2"	6	39'-10"	2	22	5.114	313.467	5.097	239.319	P
12	12	6	11"	9'-10 1/4"	0'- 7"	4'-11 5/8"	0'- 9 1/4"	0'- 6"	38'- 4 1/8"	6'- 8 3/8"	39'- 2"	188	88	188.044	3.701	742.832	40'- 2"	6	39'-10"	2	26	5.299	327.272	5.257	239.319	T

A COPY OF THE ORIGINAL SEALED AND SIGNED DRAWING IS ON FILE IN THE CENTRAL OFFICE.

SPECIFICATION REFERENCE

TRIPLE BOX CULVERTS

0 TO 2 FT. FILLS

VIRGINIA DEPARTMENT OF TRANSPORTATION

VDOT

ROAD AND BRIDGE STANDARDS

REVISION DATE 08/14

SHEET 2 OF 2

1004.06

BCT-05

FOR TYPICAL SECTION, NOTES AND OTHER DETAILS, REFER TO STANDARD BCT-DT.

DIMENSIONS						REINFORCING STEEL																										
SPAN	HGHT	T1	T2	T3	T4							BH1			BH2			BH3				BH4					BV1			BV2		
(FT.)	(FT.)	TOP SLAB	BOTTOM SLAB	EXTERIOR WALL (IN.)	INTERIOR WALL (IN.)	A	B	C	D	E	F	SIZE	SPACING C-C	LENGTH	SIZE	SPACING C-C	LENGTH	SIZE	SPACING C-C	a	LENGTH	SIZE	SPACING C-C	a	b	LENGTH	SIZE	SPACING C-C	LENGTH	SIZE	SPACING C-C	LENGTH
3	3	8"	8"	8"	8"	9	9'- 0"	9	9'- 0"	1	1'- 0"	4	12"	11'- 2"	4	12"	11'- 4"	--	---	-----	-----	4	12"	2'- 1¼"	2'- 8"	4'- 6"	4	12"	4'- 0"	4	12"	4'- 0"
3	4	8"	8"	8"	8"	9	9'- 0"	9	9'- 0"	2	2'- 0"	4	12"	11'- 2"	4	12"	11'- 4"	--	---	-----	-----	4	12"	2'- 1¼"	3'- 2"	5'- 0"	4	12"	5'- 0"	4	12"	5'- 0"
4	3	8"	8"	8"	8"	12	12'- 0"	12	12'- 0"	1	1'- 0"	4	12"	13'- 9"	4	12"	14'- 4"	--	---	-----	-----	4	12"	2'- 3⅝"	2'- 8"	4'- 8"	4	12"	4'- 0"	4	12"	4'- 0"
4	4	8"	8"	8"	8"	12	12'- 0"	12	12'- 0"	2	2'- 0"	4	12"	13'- 9"	4	12"	14'- 4"	--	---	-----	-----	4	12"	2'- 3⅝"	3'- 2"	5'- 2"	4	12"	5'- 0"	4	12"	5'- 0"
4	5	8"	8"	8"	8"	12	12'- 0"	12	12'- 0"	3	3'- 0"	4	12"	13'- 9"	4	12"	14'- 4"	--	---	-----	-----	4	12"	2'- 3⅝"	3'- 8"	5'- 8"	4	12"	6'- 0"	4	12"	6'- 0"
4	6	8"	8"	8"	8"	12	12'- 0"	12	12'- 0"	4	4'- 0"	4	12"	13'- 9"	4	12"	14'- 4"	--	---	-----	-----	4	12"	2'- 3⅝"	4'- 2"	6'- 2"	4	12"	7'- 0"	4	12"	7'- 0"
5	3	8"	8"	8"	8"	15	15'- 0"	15	15'- 0"	1	1'- 0"	4	12"	16'- 4"	4	12"	17'- 4"	4	12"	2'- 6"	4'- 9"	4	12"	2'- 6"	2'- 8"	4'-11"	4	12"	4'- 0"	4	12"	4'- 0"
5	4	8"	8"	8"	8"	15	15'- 0"	15	15'- 0"	2	2'- 0"	4	12"	16'- 4"	4	12"	17'- 4"	4	12"	2'- 6"	4'- 9"	4	12"	2'- 6"	3'- 2"	5'- 5"	4	12"	5'- 0"	4	12"	5'- 0"
5	5	8"	8"	8"	8"	15	15'- 0"	15	15'- 0"	3	3'- 0"	4	12"	16'- 4"	4	12"	17'- 4"	4	12"	2'- 6"	4'- 9"	4	12"	2'- 6"	3'- 8"	5'-11"	4	12"	6'- 0"	4	12"	6'- 0"
5	6	8"	8"	8"	8"	15	15'- 0"	15	15'- 0"	4	4'- 0"	4	12"	16'- 4"	4	12"	17'- 4"	4	12"	2'- 9"	5'- 5"	4	12"	2'- 6"	4'- 2"	6'- 5"	4	12"	7'- 0"	4	12"	7'- 0"
5	7	8"	8"	8"	8"	15	15'- 0"	15	15'- 0"	5	5'- 0"	4	12"	16'- 4"	4	12"	17'- 4"	4	12"	2'-11"	5'- 8"	4	12"	2'- 6"	4'- 8"	6'-11"	4	12"	8'- 0"	4	12"	8'- 0"
6	4	8"	8"	8"	8"	18	18'- 0"	18	18'- 0"	2	2'- 0"	4	12"	19'- 3"	4	12"	20'- 4"	--	---	-----	-----	5	12"	2'- 8⅜"	3'- 2"	5'- 6"	4	12"	5'- 0"	4	11"	5'- 0"
6	5	8"	8"	8"	8"	18	18'- 0"	18	18'- 0"	3	3'- 0"	4	12"	19'- 3"	4	12"	20'- 4"	--	---	-----	-----	5	12"	2'- 8⅜"	3'- 8"	6'- 0"	4	12"	6'- 0"	4	11"	6'- 0"
6	6	8"	8"	8"	8"	18	18'- 0"	18	18'- 0"	4	4'- 0"	4	12"	19'- 3"	4	12"	20'- 4"	--	---	-----	-----	5	12"	2'- 8⅜"	4'- 2"	6'- 6"	4	12"	7'- 0"	4	11"	7'- 0"
6	7	8"	8"	8"	8"	18	18'- 0"	18	18'- 0"	5	5'- 0"	4	12"	19'- 3"	4	12"	20'- 4"	--	---	-----	-----	5	12"	2'- 8⅜"	4'- 8"	7'- 0"	4	12"	8'- 0"	4	11"	8'- 0"
6	8	8"	8"	8"	8"	18	18'- 0"	18	18'- 0"	6	6'- 0"	4	11"	19'- 3"	4	11"	20'- 4"	4	11"	3'- 2"	6'- 2"	4	11"	2'- 8⅜"	5'- 2"	7'- 7"	4	12"	9'- 0"	4	11½"	9'- 0"
7	4	8"	8"	8"	8"	21	21'- 0"	21	21'- 0"	2	2'- 0"	4	9"	22'- 3"	4	9"	23'- 4"	4	9"	2'-10¾"	5'- 6"	4	9"	2'-10¾"	3'- 2"	5'-10"	4	12"	5'- 0"	4	10"	5'- 0"
7	6	8"	8"	8"	8"	21	21'- 0"	21	21'- 0"	4	4'- 0"	4	9"	22'- 3"	4	9"	23'- 4"	4	9"	2'-10¾"	5'- 6"	4	9"	2'-10¾"	4'- 2"	6'-10"	4	12"	7'- 0"	4	10"	7'- 0"
7	8	8"	8"	8"	8"	21	21'- 0"	21	21'- 0"	6	6'- 0"	4	9"	22'- 3"	4	9"	23'- 4"	4	9"	3'- 2"	6'- 2"	4	9"	2'-10¾"	5'- 2"	7'-10"	4	12"	9'- 0"	4	10"	9'- 0"
7	10	8"	8"	8"	8"	21	21'- 0"	21	21'- 0"	8	8'- 0"	4	9"	22'- 3"	5	9"	23'- 4"	4	9"	3'- 6"	6'- 9"	4	9"	2'-10¾"	6'- 2"	8'-10"	5	12"	11'- 0"	4	10"	11'- 0"
8	4	8"	8"	8"	8"	24	24'- 0"	24	24'- 0"	2	2'- 0"	5	11"	25'- 0"	5	11"	26'- 4"	--	---	-----	-----	6	11"	3'- 7"	3'- 6"	6'- 8"	4	12"	5'- 0"	4	7½"	5'- 0"
8	6	8"	8"	8"	8"	24	24'- 0"	24	24'- 0"	4	4'- 0"	5	11"	25'- 0"	5	11"	26'- 4"	4	11"	3'- 1¼"	5'-11"	5	11"	3'- 1¼"	4'- 2"	6'-11"	4	12"	7'- 0"	4	7½"	7'- 0"
8	8	8"	8"	8"	8"	24	24'- 0"	24	24'- 0"	6	6'- 0"	5	11"	25'- 0"	5	11"	26'- 4"	4	11"	3'- 1¼"	5'-11"	5	11"	3'- 1¼"	5'- 2"	7'-11"	4	12"	9'- 0"	4	7½"	9'- 0"
8	10	8"	8"	8"	8"	24	24'- 0"	24	24'- 0"	8	8'- 0"	5	11"	25'- 0"	5	11"	26'- 4"	4	11"	3'- 6"	6'- 9"	6	11"	3'- 7"	6'- 6"	9'- 8"	4	9"	11'- 0"	4	8"	11'- 0"
9	4	9¼"	9¼"	8"	8"	27	27'- 0"	27	27'- 0"	2	2'- 0"	5	11"	28'- 0"	5	11"	29'- 4"	4	11"	3'- 3⅝"	6'- 4"	6	11"	3'-10"	3'- 7"	7'- 0"	4	12"	5'- 2"	4	7½"	5'- 2"
9	6	9½"	9½"	8"	8"	27	27'- 0"	27	27'- 0"	4	4'- 0"	5	10"	28'- 0"	5	10"	29'- 4"	4	10"	3'- 3⅝"	6'- 4"	5	10"	3'- 3⅝"	4'- 3½"	7'- 3"	4	12"	7'- 3"	4	7½"	7'- 3"
9	8	9½"	9½"	8"	8"	27	27'- 0"	27	27'- 0"	6	6'- 0"	5	10"	28'- 0"	5	10"	29'- 4"	5	10"	3'- 3⅝"	6'- 3"	5	10"	3'- 3⅝"	5'- 3½"	8'- 3"	4	12"	9'- 3"	4	7"	9'- 3"
9	10	9½"	9½"	8"	8"	27	27'- 0"	27	27'- 0"	8	8'- 0"	5	9"	28'- 0"	5	9"	29'- 4"	5	9"	3'- 8"	6'-11"	5	9"	3'- 3⅝"	6'- 3½"	9'- 3"	5	12"	11'- 3"	4	7"	11'- 3"
9	12	9¾"	9¾"	8"	8"	27	27'- 0"	27	27'- 0"	10	10'- 0"	5	9"	28'- 0"	5	9"	29'- 4"	5	9"	4'- 1"	7'-11"	5	9"	3'- 3⅝"	7'- 3¾"	10'- 3"	5	8"	13'- 3"	4	7½"	13'- 3"
10	4	9½"	9½"	8"	8"	30	30'- 0"	30	30'- 0"	2	2'- 0"	5	9"	31'- 0"	5	9"	32'- 4"	--	---	-----	-----	5	9"	3'- 6"	3'- 3½"	6'- 6"	4	12"	5'- 3"	5	10½"	5'- 3"
10	6	9½"	9½"	8"	8"	30	30'- 0"	30	30'- 0"	4	4'- 0"	5	10"	31'- 0"	5	10"	32'- 4"	4	10"	3'- 6"	6'- 9"	5	10"	3'- 6"	4'- 3½"	7'- 6"	4	12"	7'- 3"	4	6½"	7'- 3"
10	8	9½"	9½"	8"	8"	30	30'- 0"	30	30'- 0"	6	6'- 0"	5	9"	31'- 0"	5	9"	32'- 4"	4	9"	3'- 6"	6'- 9"	5	9"	3'- 6"	5'- 3½"	8'- 6"	4	12"	9'- 3"	4	7"	9'- 3"
10	10	9¾"	9¾"	8"	8"	30	30'- 0"	30	30'- 0"	8	8'- 0"	5	9"	31'- 0"	5	9"	32'- 4"	4	9"	3'- 8"	6'-11"	5	9"	3'- 6"	6'- 3¾"	9'- 6"	4	9"	11'- 3"	4	7½"	11'- 3"
10	12	9¾"	9¾"	8"	8"	30	30'- 0"	30	30'- 0"	10	10'- 0"	6	12"	31'- 0"	6	12"	32'- 4"	4	12"	4'- 1"	7'-11"	6	12"	4'- 0"	7'- 8"	11'- 3"	5	8"	13'- 3"	4	8"	13'- 3"
12	6	10"	10"	8"	8"	36	36'- 0"	36	36'- 0"	4	4'- 0"	5	9"	37'- 0"	5	9"	38'- 4"	--	---	-----	-----	6	9"	4'- 5"	4'- 8"	8'- 8"	4	12"	7'- 4"	5	9"	7'- 4"
12	8	10"	10"	8"	8"	36	36'- 0"	36	36'- 0"	6	6'- 0"	6	12"	37'- 0"	6	12"	38'- 4"	--	---	-----	-----	7	12"	4'-10"	5'-11"	10'- 3"	4	12"	9'- 4"	4	6"	9'- 4"
12	10	10"	10"	8"	8"	36	36'- 0"	36	36'- 0"	8	8'- 0"	5	8"	37'- 0"	5	8"	38'- 4"	4	8"	3'-10¾"	7'- 6"	5	8"	3'-10¾"	6'- 4"	9'-11"	4	10"	11'- 4"	5	9½"	11'- 4"
12	12	10¼"	10¼"	8"	8"	36	36'- 0"	36	36'- 0"	10	10'- 0"	6	11"	37'- 0"	6	11"	38'- 4"	4	11"	4'- 1"	7'-11"	6	11"	4'- 5"	7'- 8"	11'- 8"	5	8"	13'- 5"	4	6½"	13'- 5"

A COPY OF THE ORIGINAL SEALED AND SIGNED DRAWING IS ON FILE IN THE CENTRAL OFFICE.

VDOT
ROAD AND BRIDGE STANDARDS

SHEET 1 OF 2
1004.07

REVISION DATE
07/11

TRIPLE BOX CULVERTS

2 TO 5 FT. FILLS

VIRGINIA DEPARTMENT OF TRANSPORTATION

SPECIFICATION REFERENCE

BCT-05

FOR TYPICAL SECTION, NOTES AND OTHER DETAILS, REFER TO STANDARD BCT-DT.

SPAN (FT.)	HGHT (FT.)	REINFORCING STEEL BT1 SIZE	SPACING c-c	a	b	c	d	e	f	g	LENGTH	NO. BL1 #4 BARS	NO. BL2 #3 BARS	REINFORCING STEEL (LBS/LONG. JT)	QUAN./LF CONCRETE CLASS A4 (CY/LF)	REINFORCING STEEL (LBS/LF)	HEADWALLS G HEADWALL LENGTH	HW1 SIZE	HW1 LENGTH	NO. HW2 BARS	NO. HW3 BARS	INLET CONCRETE CL. A4 (CY)	INLET REINFORCING STEEL (LBS)	OUTLET CONCRETE CL. A4 (CY)	OUTLET REINFORCING STEEL (LBS)	WINGWALL
3	3	4	12"	2'- 8⅞"	0'- 4½"	1'- 6⅝"	0'- 5⅞"	0'- 3¾"	11'- 3⅞"	1'- 5⅞"	11'-10"	44	16	42.388	0.989	109.333	13'- 2"	6	12'-10"	2	8	1.827	102.932	1.808	77.103	A
3	4	4	12"	2'- 8⅞"	0'- 4½"	1'- 6⅝"	0'- 5⅞"	0'- 3¾"	11'- 3⅞"	1'- 5⅞"	11'-10"	44	24	45.212	1.087	117.685	13'- 2"	6	12'-10"	2	10	1.932	109.835	1.901	77.103	C
4	3	4	12"	3'- 6½"	0'- 4½"	1'-11½"	0'- 5⅞"	0'- 3¾"	14'- 4"	2'- 1"	14'-10"	56	16	52.408	1.136	129.262	16'- 2"	6	15'-10"	2	8	2.131	120.956	2.121	95.127	A
4	4	4	12"	3'- 6½"	0'- 4½"	1'-11½"	0'- 5⅞"	0'- 3¾"	14'- 4"	2'- 1"	14'-10"	56	24	55.232	1.234	137.614	16'- 2"	6	15'-10"	2	10	2.236	127.859	2.214	95.127	C
4	5	4	12"	3'- 6½"	0'- 4½"	1'-11½"	0'- 5⅞"	0'- 3¾"	14'- 4"	2'- 1"	14'-10"	56	32	58.056	1.332	145.966	16'- 2"	6	15'-10"	2	12	2.341	134.761	2.307	95.127	E
4	6	4	12"	3'- 6½"	0'- 4½"	1'-11½"	0'- 5⅞"	0'- 3¾"	14'- 4"	2'- 1"	14'-10"	56	40	60.880	1.430	154.318	16'- 2"	6	15'-10"	2	14	2.446	141.664	2.399	95.127	G
5	3	4	12"	4'- 4⅛"	0'- 4½"	2'- 4¼"	0'- 5⅞"	0'- 3¾"	17'- 4"	2'- 8¼"	17'-10"	68	16	62.428	1.281	162.105	19'- 2"	6	18'-10"	2	8	2.434	138.980	2.435	113.151	A
5	4	4	12"	4'- 4⅛"	0'- 4½"	2'- 4¼"	0'- 5⅞"	0'- 3¾"	17'- 4"	2'- 8¼"	17'-10"	68	24	65.252	1.380	170.457	19'- 2"	6	18'-10"	2	10	2.539	145.883	2.527	113.151	C
5	5	4	12"	4'- 4⅛"	0'- 4½"	2'- 4¼"	0'- 5⅞"	0'- 3¾"	17'- 4"	2'- 8¼"	17'-10"	68	32	68.076	1.478	178.809	19'- 2"	6	18'-10"	2	12	2.644	152.785	2.620	113.151	E
5	6	4	12"	4'- 4⅛"	0'- 4½"	2'- 4¼"	0'- 5⅞"	0'- 3¾"	17'- 4"	2'- 8¼"	17'-10"	68	40	70.900	1.575	194.389	19'- 2"	6	18'-10"	2	14	2.750	159.688	2.713	113.151	G
5	7	4	12"	4'- 4⅛"	0'- 4½"	2'- 4¼"	0'- 5⅞"	0'- 3¾"	17'- 4"	2'- 8¼"	17'-10"	68	48	73.724	1.673	203.673	19'- 2"	6	18'-10"	2	16	2.855	166.591	2.806	113.151	I
6	4	4	12"	5'- 1¾"	0'- 4½"	2'- 9"	0'- 5⅞"	0'- 3¾"	20'- 4"	3'- 3½"	20'-10"	80	24	75.272	1.526	191.451	22'- 2"	6	21'-10"	2	10	2.843	163.907	2.841	131.175	C
6	5	4	12"	5'- 1¾"	0'- 4½"	2'- 9"	0'- 5⅞"	0'- 3¾"	20'- 4"	3'- 3½"	20'-10"	80	32	78.096	1.624	202.435	22'- 2"	6	21'-10"	2	12	2.948	170.809	2.934	131.175	E
6	6	4	12"	5'- 1¾"	0'- 4½"	2'- 9"	0'- 5⅞"	0'- 3¾"	20'- 4"	3'- 3½"	20'-10"	80	40	80.920	1.722	212.059	22'- 2"	6	21'-10"	2	14	3.053	177.712	3.026	131.175	G
6	7	4	12"	5'- 1¾"	0'- 4½"	2'- 9"	0'- 5⅞"	0'- 3¾"	20'- 4"	3'- 3½"	20'-10"	80	48	83.744	1.820	221.683	22'- 2"	6	21'-10"	2	16	3.158	184.615	3.119	131.175	I
6	8	4	11"	5'- 1¾"	0'- 4½"	2'- 9"	0'- 5⅞"	0'- 3¾"	20'- 4"	3'- 3½"	20'-10"	80	56	86.568	1.917	247.827	22'- 2"	6	21'-10"	2	18	3.263	191.517	3.212	131.175	K
7	4	4	9"	5'-11⅜"	0'- 4½"	3'- 1⅞"	0'- 5⅞"	0'- 3¾"	23'- 4⅛"	3'-10⅝"	23'-10"	92	24	85.292	1.669	266.347	25'- 2"	6	24'-10"	2	10	3.146	181.931	3.154	149.199	C
7	6	4	9"	5'-11⅜"	0'- 4½"	3'- 1⅞"	0'- 5⅞"	0'- 3¾"	23'- 4⅛"	3'-10⅝"	23'-10"	92	40	90.940	1.865	285.595	25'- 2"	6	24'-10"	2	14	3.357	195.736	3.340	149.199	G
7	8	4	9"	5'-11⅜"	0'- 4½"	3'- 1⅞"	0'- 5⅞"	0'- 3¾"	23'- 4⅛"	3'-10⅝"	23'-10"	92	56	96.588	2.061	307.293	25'- 2"	6	24'-10"	2	18	3.567	209.541	3.525	149.199	K
7	10	4	9"	5'-11⅜"	0'- 4½"	3'- 1⅞"	0'- 5⅞"	0'- 3¾"	23'- 4⅛"	3'-10⅝"	23'-10"	92	72	102.236	2.254	359.149	25'- 2"	6	24'-10"	2	22	3.777	223.347	3.711	149.199	O
8	4	5	11"	6'- 8⅞"	0'- 4⅝"	3'- 6⅝"	0'- 6"	0'- 3¾"	26'- 3⅞"	4'- 5⅞"	26'-10"	104	24	95.312	1.812	335.428	28'- 2"	6	27'-10"	2	10	3.450	199.955	3.468	167.223	C
8	6	5	11"	6'- 8⅞"	0'- 4⅝"	3'- 6⅝"	0'- 6"	0'- 3¾"	26'- 3⅞"	4'- 5⅞"	26'-10"	104	40	100.960	2.007	359.349	28'- 2"	6	27'-10"	2	14	3.660	213.760	3.653	167.223	G
8	8	5	11"	6'- 8⅞"	0'- 4⅝"	3'- 6⅝"	0'- 6"	0'- 3¾"	26'- 3⅞"	4'- 5⅞"	26'-10"	104	56	106.608	2.203	381.727	28'- 2"	6	27'-10"	2	18	3.870	227.565	3.839	167.223	K
8	10	5	11"	6'- 8⅞"	0'- 4⅝"	3'- 6⅝"	0'- 6"	0'- 3¾"	26'- 3⅞"	4'- 5⅞"	26'-10"	104	72	112.256	2.397	430.737	28'- 2"	6	27'-10"	2	22	4.081	241.371	4.024	167.223	O
9	4	5	11"	7'- 5⅞"	0'- 5⅞"	3'-10¼"	0'- 7¾"	0'- 5"	29'- 4"	4'-11¾"	30'- 0"	116	24	105.332	2.185	387.151	31'- 2"	6	30'-10"	2	10	3.682	217.979	3.710	185.247	D
9	6	5	10"	7'- 5¾"	0'- 6⅛"	3'-10"	0'- 8⅛"	0'- 5¼"	29'- 4"	4'-11½"	30'- 1"	116	40	110.980	2.426	415.921	31'- 2"	6	30'-10"	2	14	3.874	231.784	3.877	185.247	H
9	8	5	10"	7'- 5¾"	0'- 6⅛"	3'-10"	0'- 8⅛"	0'- 5¼"	29'- 4"	4'-11½"	30'- 1"	116	56	116.628	2.621	452.011	31'- 2"	6	30'-10"	2	18	4.084	245.589	4.063	185.247	L
9	10	5	9"	7'- 5¾"	0'- 6⅛"	3'-10"	0'- 8⅛"	0'- 5¼"	29'- 4"	4'-11½"	30'- 1"	116	72	122.276	2.813	519.719	31'- 2"	6	30'-10"	2	22	4.295	259.395	4.248	185.247	P
9	12	5	9"	7'- 5⅝"	0'- 6⅜"	3'- 9¾"	0'- 8⅜"	0'- 5½"	29'- 4"	4'-11¼"	30'- 1"	116	88	127.924	3.053	561.492	31'- 2"	6	30'-10"	2	26	4.487	273.200	4.416	185.247	T
10	4	5	9"	8'- 3⅜"	0'- 6⅛"	4'- 2¾"	0'- 8⅛"	0'- 5¼"	32'- 4"	5'- 6¾"	33'- 1"	128	24	115.352	2.403	436.712	34'- 2"	6	33'-10"	2	10	3.953	236.003	3.991	203.271	D
10	6	5	10"	8'- 3⅜"	0'- 6⅛"	4'- 2¾"	0'- 8⅛"	0'- 5¼"	32'- 4"	5'- 6¾"	33'- 1"	128	40	121.000	2.599	454.319	34'- 2"	6	33'-10"	2	14	4.164	249.808	4.177	203.271	H
10	8	5	9"	8'- 3⅜"	0'- 6⅛"	4'- 2¾"	0'- 8⅛"	0'- 5¼"	32'- 4"	5'- 6¾"	33'- 1"	128	56	126.648	2.792	508.554	34'- 2"	6	33'-10"	2	18	4.374	263.613	4.362	203.271	L
10	10	5	9"	8'- 3¼"	0'- 6⅜"	4'- 2½"	0'- 8⅜"	0'- 5½"	32'- 4"	5'- 6½"	33'- 1"	128	72	132.296	3.038	535.338	34'- 2"	6	33'-10"	2	22	4.564	277.419	4.527	203.271	P
10	12	6	12"	8'- 3¼"	0'- 6½"	4'- 2½"	0'- 8½"	0'- 5½"	32'- 4"	5'- 6½"	33'- 1"	128	88	137.944	3.229	624.508	34'- 2"	6	33'-10"	2	26	4.774	291.224	4.713	203.271	T
12	6	5	9"	9'-10⅜"	0'- 6⅝"	4'-11⅞"	0'- 8¾"	0'- 5¾"	38'- 4⅛"	6'- 8⅝"	39'- 1"	152	40	141.040	3.062	562.160	40'- 2"	6	39'-10"	2	14	4.693	285.856	4.726	239.319	H
12	8	6	12"	9'-10⅜"	0'- 6¾"	4'-11⅞"	0'- 8⅞"	0'- 5¾"	38'- 4⅛"	6'- 8⅝"	39'- 1"	152	56	146.688	3.255	618.563	40'- 2"	6	39'-10"	2	18	4.903	299.661	4.912	239.319	L
12	10	5	8"	9'-10⅜"	0'- 6⅝"	4'-11⅞"	0'- 8¾"	0'- 5¾"	38'- 4⅛"	6'- 8⅝"	39'- 1"	152	72	152.336	3.449	673.750	40'- 2"	6	39'-10"	2	22	5.114	313.467	5.097	239.319	P
12	12	6	11"	9'-10¼"	0'- 7"	4'-11⅝"	0'- 9¼"	0'- 6"	38'- 4⅛"	6'- 8⅜"	39'- 2"	152	88	157.984	3.702	725.364	40'- 2"	6	39'-10"	2	26	5.299	327.272	5.257	239.319	T

A COPY OF THE ORIGINAL SEALED AND SIGNED DRAWING IS ON FILE IN THE CENTRAL OFFICE.

SPECIFICATION REFERENCE

TRIPLE BOX CULVERTS

2 TO 5 FT. FILLS

VIRGINIA DEPARTMENT OF TRANSPORTATION

VDOT

ROAD AND BRIDGE STANDARDS

REVISION DATE 08/14

SHEET 2 OF 2

1004.08

BCT-10

FOR TYPICAL SECTION, NOTES AND OTHER DETAILS, REFER TO STANDARD BCT-DT.

DIMENSIONS						REINFORCING STEEL																										
SPAN	HGHT	T1	T2	T3	T4							BH1			BH2			BH3				BH4					BV1			BV2		
(FT.)	(FT.)	TOP SLAB	BOTTOM SLAB	EXTERIOR WALL (IN.)	INTERIOR WALL (IN.)	A	B	C	D	E	F	SIZE	SPACING C-C	LENGTH	SIZE	SPACING C-C	LENGTH	SIZE	SPACING C-C	a	LENGTH	SIZE	SPACING C-C	a	b	LENGTH	SIZE	SPACING C-C	LENGTH	SIZE	SPACING C-C	LENGTH
3	3	8"	8"	8"	8"	9	9'- 0"	9	9'- 0"	1	1'- 0"	4	12"	11'- 2"	4	12"	11'- 4"	--	---	-----	-----	4	12"	2'- 1¼"	2'- 8"	4'- 6"	4	12"	4'- 0"	4	12"	4'- 0"
3	4	8"	8"	8"	8"	9	9'- 0"	9	9'- 0"	2	2'- 0"	4	12"	11'- 2"	4	12"	11'- 4"	--	---	-----	-----	4	12"	2'- 1¼"	3'- 2"	5'- 0"	4	12"	5'- 0"	4	12"	5'- 0"
4	3	8"	8"	8"	8"	12	12'- 0"	12	12'- 0"	1	1'- 0"	4	12"	13'- 9"	4	12"	14'- 4"	--	---	-----	-----	4	12"	2'- 3⅝"	2'- 8"	4'- 8"	4	12"	4'- 0"	4	12"	4'- 0"
4	4	8"	8"	8"	8"	12	12'- 0"	12	12'- 0"	2	2'- 0"	4	12"	13'- 9"	4	12"	14'- 4"	--	---	-----	-----	4	12"	2'- 3⅝"	3'- 2"	5'- 2"	4	12"	5'- 0"	4	12"	5'- 0"
4	5	8"	8"	8"	8"	12	12'- 0"	12	12'- 0"	3	3'- 0"	4	12"	13'- 9"	4	12"	14'- 4"	--	---	-----	-----	4	12"	2'- 3⅝"	3'- 8"	5'- 8"	4	12"	6'- 0"	4	12"	6'- 0"
4	6	8"	8"	8"	8"	12	12'- 0"	12	12'- 0"	4	4'- 0"	4	12"	13'- 9"	4	12"	14'- 4"	--	---	-----	-----	4	12"	2'- 3⅝"	4'- 2"	6'- 2"	4	12"	7'- 0"	4	12"	7'- 0"
5	3	8"	8"	8"	8"	15	15'- 0"	15	15'- 0"	1	1'- 0"	4	12"	16'- 4"	4	12"	17'- 4"	--	---	-----	-----	4	12"	2'- 6"	2'- 8"	4'-11"	4	12"	4'- 0"	4	12"	4'- 0"
5	4	8"	8"	8"	8"	15	15'- 0"	15	15'- 0"	2	2'- 0"	4	12"	16'- 4"	4	12"	17'- 4"	--	---	-----	-----	4	12"	2'- 6"	3'- 2"	5'- 5"	4	12"	5'- 0"	4	12"	5'- 0"
5	5	8"	8"	8"	8"	15	15'- 0"	15	15'- 0"	3	3'- 0"	4	12"	16'- 4"	4	12"	17'- 4"	--	---	-----	-----	4	12"	2'- 6"	3'- 8"	5'-11"	4	12"	6'- 0"	4	12"	6'- 0"
5	6	8"	8"	8"	8"	15	15'- 0"	15	15'- 0"	4	4'- 0"	4	12"	16'- 4"	4	12"	17'- 4"	--	---	-----	-----	4	12"	2'- 6"	4'- 2"	6'- 5"	4	12"	7'- 0"	4	12"	7'- 0"
5	7	8"	8"	8"	8"	15	15'- 0"	15	15'- 0"	5	5'- 0"	4	12"	16'- 4"	4	12"	17'- 4"	--	---	-----	-----	4	12"	2'- 6"	4'- 8"	6'-11"	4	12"	8'- 0"	4	12"	8'- 0"
6	4	8"	8"	8"	8"	18	18'- 0"	18	18'- 0"	2	2'- 0"	4	12"	19'- 3"	4	12"	20'- 4"	3	12"	2'- 8⅜"	5'- 2"	4	12"	2'- 8⅜"	3'- 2"	5'- 7"	4	12"	5'- 0"	4	12"	5'- 0"
6	5	8"	8"	8"	8"	18	18'- 0"	18	18'- 0"	3	3'- 0"	4	12"	19'- 3"	4	12"	20'- 4"	--	---	-----	-----	4	12"	2'- 8⅜"	3'- 8"	6'- 1"	4	12"	6'- 0"	4	12"	6'- 0"
6	6	8"	8"	8"	8"	18	18'- 0"	18	18'- 0"	4	4'- 0"	4	12"	19'- 3"	4	12"	20'- 4"	--	---	-----	-----	4	12"	2'- 8⅜"	4'- 2"	6'- 7"	4	12"	7'- 0"	4	12"	7'- 0"
6	7	8"	8"	8"	8"	18	18'- 0"	18	18'- 0"	5	5'- 0"	4	12"	19'- 3"	4	12"	20'- 4"	--	---	-----	-----	4	12"	2'- 8⅜"	4'- 8"	7'- 1"	4	12"	8'- 0"	4	12"	8'- 0"
6	8	8"	8"	8"	8"	18	18'- 0"	18	18'- 0"	6	6'- 0"	4	12"	19'- 3"	4	12"	20'- 4"	3	12"	3'- 2"	6'- 2"	4	12"	2'- 8⅜"	5'- 2"	7'- 7"	4	12"	9'- 0"	4	12"	9'- 0"
7	4	8"	8"	8"	8"	21	21'- 0"	21	21'- 0"	2	2'- 0"	4	12"	22'- 3"	4	12"	23'- 4"	--	---	-----	-----	5	12"	2'-10¾"	3'- 2"	5'- 9"	4	11½"	5'- 0"	4	12"	5'- 0"
7	6	8"	8"	8"	8"	21	21'- 0"	21	21'- 0"	4	4'- 0"	4	12"	22'- 3"	4	12"	23'- 4"	4	12"	2'-10¾"	5'- 6"	4	12"	2'-10¾"	4'- 2"	6'-10"	4	12"	7'- 0"	4	12"	7'- 0"
7	8	8"	8"	8"	8"	21	21'- 0"	21	21'- 0"	6	6'- 0"	4	12"	22'- 3"	4	12"	23'- 4"	4	12"	3'- 2"	6'- 2"	4	12"	2'-10¾"	5'- 2"	7'-10"	4	12"	9'- 0"	4	12"	9'- 0"
7	10	8"	8"	8"	8"	21	21'- 0"	21	21'- 0"	8	8'- 0"	4	11"	22'- 3"	4	11"	23'- 4"	--	---	-----	-----	5	11"	2'-10¾"	6'- 2"	8'- 9"	5	10"	11'- 0"	4	12"	11'- 0"
8	4	8"	8"	8"	8"	24	24'- 0"	24	24'- 0"	2	2'- 0"	4	11"	25'- 0"	4	11"	26'- 4"	3	11"	3'- 1¼"	6'- 0"	5	11"	3'- 1¼"	3'- 2"	5'-11"	4	8"	5'- 0"	4	12"	5'- 0"
8	6	8¼"	8¼"	8"	8"	24	24'- 0"	24	24'- 0"	4	4'- 0"	4	10"	25'- 0"	4	10"	26'- 4"	--	---	-----	-----	5	10"	3'- 1¼"	4'- 2¼"	7'- 0"	4	12"	7'- 0"	4	12"	7'- 0"
8	8	8½"	8½"	8"	8"	24	24'- 0"	24	24'- 0"	6	6'- 0"	4	10"	25'- 0"	4	10"	26'- 4"	--	---	-----	-----	5	10"	3'- 1¼"	5'- 2½"	8'- 0"	4	12"	9'- 1"	4	12"	9'- 1"
8	10	8¾"	8¾"	8"	8"	24	24'- 0"	24	24'- 0"	8	8'- 0"	4	9"	25'- 0"	4	9"	26'- 4"	--	---	-----	-----	5	9"	3'- 1¼"	6'- 2¾"	9'- 0"	5	11"	11'- 2"	4	12"	11'- 2"
9	4	8¾"	8¾"	8"	8"	27	27'- 0"	27	27'- 0"	2	2'- 0"	4	9"	28'- 0"	4	9"	29'- 4"	3	9"	3'- 3⅝"	6'- 5"	5	9"	3'- 3⅝"	3'- 2¾"	6'- 2"	4	7½"	5'- 2"	4	12"	5'- 2"
9	6	9"	9"	8"	8"	27	27'- 0"	27	27'- 0"	4	4'- 0"	4	9"	28'- 0"	4	9"	29'- 4"	--	---	-----	-----	5	9"	3'- 3⅝"	4'- 3"	7'- 3"	4	12"	7'- 2"	4	12"	7'- 2"
9	8	9¼"	9¼"	8"	8"	27	27'- 0"	27	27'- 0"	6	6'- 0"	4	9"	28'- 0"	5	9"	29'- 4"	--	---	-----	-----	5	9"	3'- 3⅝"	5'- 3¼"	8'- 3"	4	12"	9'- 2"	4	12"	9'- 2"
9	10	9½"	9½"	8"	8"	27	27'- 0"	27	27'- 0"	8	8'- 0"	4	9"	28'- 0"	5	9"	29'- 4"	--	---	-----	-----	5	9"	3'- 3⅝"	6'- 3½"	9'- 3"	5	12"	11'- 3"	4	12"	11'- 3"
9	12	9½"	9½"	8"	8"	27	27'- 0"	27	27'- 0"	10	10'- 0"	4	8"	28'- 0"	4	8"	29'- 4"	3	8"	4'- 1"	7'-11"	5	8"	3'- 3⅝"	7'- 3½"	10'- 3"	5	7"	13'- 3"	4	12"	13'- 3"
10	4	9¾"	9¾"	8"	8"	30	30'- 0"	30	30'- 0"	2	2'- 0"	5	8"	31'- 3"	4	8"	32'- 4"	--	---	-----	-----	5	8"	3'- 6"	3'- 3¾"	6'- 6"	4	7"	5'- 3"	4	12"	5'- 3"
10	6	10"	10"	8"	8"	30	30'- 0"	30	30'- 0"	4	4'- 0"	5	9"	31'- 3"	5	9"	32'- 4"	--	---	-----	-----	5	9"	3'- 6"	4'- 4"	7'- 6"	4	11"	7'- 4"	4	12"	7'- 4"
10	8	10"	10"	8"	8"	30	30'- 0"	30	30'- 0"	6	6'- 0"	5	8"	31'- 3"	5	8"	32'- 4"	3	8"	3'- 6"	6'-10"	4	8"	3'- 6"	5'- 4"	8'- 7"	4	12"	9'- 4"	4	12"	9'- 4"
10	10	10¼"	10¼"	8"	8"	30	30'- 0"	30	30'- 0"	8	8'- 0"	5	8"	31'- 3"	5	8"	32'- 4"	4	8"	3'- 8"	6'-11"	4	8"	3'- 6"	6'- 4¼"	9'- 7"	5	12"	11'- 5"	4	12"	11'- 5"
10	12	10½"	10½"	8"	8"	30	30'- 0"	30	30'- 0"	10	10'- 0"	5	11"	31'- 3"	5	11"	32'- 4"	3	11"	4'- 2"	8'- 2"	6	11"	4'- 0"	7'- 8"	11'- 4"	5	7"	13'- 5"	4	12"	13'- 5"
12	6	11½"	11½"	8"	8"	36	36'- 0"	36	36'- 0"	4	4'- 0"	5	9"	37'- 0"	5	9"	38'- 4"	3	9"	3'-10¾"	7'- 7"	5	9"	3'-10¾"	4'- 5½"	8'- 0"	4	9"	7'- 7"	4	12"	7'- 7"
12	8	11¾"	11¾"	8"	8"	36	36'- 0"	36	36'- 0"	6	6'- 0"	5	9"	37'- 0"	5	9"	38'- 4"	3	9"	3'-10¾"	7'- 7"	5	9"	3'-10¾"	5'- 5¾"	9'- 1"	4	12"	9'- 8"	4	12"	9'- 8"
12	10	11¾"	11¾"	8"	8"	36	36'- 0"	36	36'- 0"	8	8'- 0"	6	9"	37'- 0"	5	9"	38'- 4"	3	9"	3'-10¾"	7'- 7"	5	9"	3'-10¾"	6'- 5¾"	10'- 1"	5	12"	11'- 8"	4	12"	11'- 8"
12	12	12"	12"	8"	8"	36	36'- 0"	36	36'- 0"	10	10'- 0"	6	9"	37'- 0"	5	9"	38'- 4"	--	---	-----	-----	6	9"	4'- 5"	7'-10"	11'-10"	6	11½"	13'- 8"	4	12"	13'- 8"

A COPY OF THE ORIGINAL SEALED AND SIGNED DRAWING IS ON FILE IN THE CENTRAL OFFICE.

VDOT
ROAD AND BRIDGE STANDARDS

SHEET 1 OF 2 | REVISION DATE
1004.09 | 07/11

TRIPLE BOX CULVERTS

5 TO 10 FT. FILLS

VIRGINIA DEPARTMENT OF TRANSPORTATION

SPECIFICATION REFERENCE

BCT-10

FOR TYPICAL SECTION, NOTES AND OTHER DETAILS, REFER TO STANDARD BCT-DT.

SPAN (FT.)	HGHT (FT.)	REINFORCING STEEL BT1 SIZE	SPACING c-c	a	b	c	d	e	f	g	LENGTH	NO. BL1 #4 BARS	NO. BL2 #3 BARS	REINFORCING STEEL (LBS/LONG. JT)	QUAN./LF CONCRETE CLASS A4 (CY/LF)	REINFORCING STEEL (LBS/LF)	HEADWALLS G HEADWALL LENGTH	HW1 SIZE	HW1 LENGTH	NO. HW2 BARS	NO. HW3 BARS	INLET CONCRETE CL. A4 (CY)	INLET REINFORCING STEEL (LBS)	OUTLET CONCRETE CL. A4 (CY)	OUTLET REINFORCING STEEL (LBS)	WINGWALL
3	3	4	12"	2'- 8⅞"	0'- 4½"	1'- 6⅝"	0'- 5⅞"	0'- 3¾"	11'- 3⅞"	1'- 5⅞"	11'-10"	44	16	42.388	0.989	109.333	13'- 2"	6	12'-10"	2	8	1.827	102.932	1.808	77.103	A
3	4	4	12"	2'- 8⅞"	0'- 4½"	1'- 6⅝"	0'- 5⅞"	0'- 3¾"	11'- 3⅞"	1'- 5⅞"	11'-10"	44	24	45.212	1.087	117.685	13'- 2"	6	12'-10"	2	10	1.932	109.835	1.901	77.103	C
4	3	4	12"	3'- 6½"	0'- 4½"	1'-11½"	0'- 5⅞"	0'- 3¾"	14'- 4"	2'- 1"	14'-10"	56	16	52.408	1.136	129.262	16'- 2"	6	15'-10"	2	8	2.131	120.956	2.121	95.127	A
4	4	4	12"	3'- 6½"	0'- 4½"	1'-11½"	0'- 5⅞"	0'- 3¾"	14'- 4"	2'- 1"	14'-10"	56	24	55.232	1.234	137.614	16'- 2"	6	15'-10"	2	10	2.236	127.859	2.214	95.127	C
4	5	4	12"	3'- 6½"	0'- 4½"	1'-11½"	0'- 5⅞"	0'- 3¾"	14'- 4"	2'- 1"	14'-10"	56	32	58.056	1.332	145.966	16'- 2"	6	15'-10"	2	12	2.341	134.761	2.307	95.127	E
4	6	4	12"	3'- 6½"	0'- 4½"	1'-11½"	0'- 5⅞"	0'- 3¾"	14'- 4"	2'- 1"	14'-10"	56	40	60.880	1.430	154.318	16'- 2"	6	15'-10"	2	14	2.446	141.664	2.399	95.127	G
5	3	4	12"	4'- 4⅛"	0'- 4½"	2'- 4¼"	0'- 5⅞"	0'- 3¾"	17'- 4"	2'- 8¼"	17'-10"	68	16	62.428	1.282	149.413	19'- 2"	6	18'-10"	2	8	2.434	138.980	2.435	113.151	A
5	4	4	12"	4'- 4⅛"	0'- 4½"	2'- 4¼"	0'- 5⅞"	0'- 3¾"	17'- 4"	2'- 8¼"	17'-10"	68	24	65.252	1.381	157.765	19'- 2"	6	18'-10"	2	10	2.539	145.883	2.527	113.151	C
5	5	4	12"	4'- 4⅛"	0'- 4½"	2'- 4¼"	0'- 5⅞"	0'- 3¾"	17'- 4"	2'- 8¼"	17'-10"	68	32	68.076	1.479	166.117	19'- 2"	6	18'-10"	2	12	2.644	152.785	2.620	113.151	E
5	6	4	12"	4'- 4⅛"	0'- 4½"	2'- 4¼"	0'- 5⅞"	0'- 3¾"	17'- 4"	2'- 8¼"	17'-10"	68	40	70.900	1.577	174.469	19'- 2"	6	18'-10"	2	14	2.750	159.688	2.713	113.151	G
5	7	4	12"	4'- 4⅛"	0'- 4½"	2'- 4¼"	0'- 5⅞"	0'- 3¾"	17'- 4"	2'- 8¼"	17'-10"	68	48	73.724	1.675	182.821	19'- 2"	6	18'-10"	2	16	2.855	166.591	2.806	113.151	I
6	4	4	12"	5'- 1¾"	0'- 4½"	2'- 9"	0'- 5⅞"	0'- 3¾"	20'- 4"	3'- 3½"	20'-10"	80	24	75.272	1.526	191.180	22'- 2"	6	21'-10"	2	10	2.843	163.907	2.841	131.175	C
6	5	4	12"	5'- 1¾"	0'- 4½"	2'- 9"	0'- 5⅞"	0'- 3¾"	20'- 4"	3'- 3½"	20'-10"	80	32	78.096	1.625	192.048	22'- 2"	6	21'-10"	2	12	2.948	170.809	2.934	131.175	E
6	6	4	12"	5'- 1¾"	0'- 4½"	2'- 9"	0'- 5⅞"	0'- 3¾"	20'- 4"	3'- 3½"	20'-10"	80	40	80.920	1.723	200.651	22'- 2"	6	21'-10"	2	14	3.053	177.712	3.026	131.175	G
6	7	4	12"	5'- 1¾"	0'- 4½"	2'- 9"	0'- 5⅞"	0'- 3¾"	20'- 4"	3'- 3½"	20'-10"	80	48	83.744	1.821	209.118	22'- 2"	6	21'-10"	2	16	3.158	184.615	3.119	131.175	I
6	8	4	12"	5'- 1¾"	0'- 4½"	2'- 9"	0'- 5⅞"	0'- 3¾"	20'- 4"	3'- 3½"	20'-10"	80	56	86.568	1.919	227.090	22'- 2"	6	21'-10"	2	18	3.263	191.517	3.212	131.175	K
7	4	4	12"	5'-11⅜"	0'- 4½"	3'- 1⅞"	0'- 5⅞"	0'- 3¾"	23'- 4⅛"	3'-10⅝"	23'-10"	92	24	85.292	1.673	213.514	25'- 2"	6	24'-10"	2	10	3.146	181.931	3.154	149.199	C
7	6	4	12"	5'-11⅜"	0'- 4½"	3'- 1⅞"	0'- 5⅞"	0'- 3¾"	23'- 4⅛"	3'-10⅝"	23'-10"	92	40	90.940	1.868	236.972	25'- 2"	6	24'-10"	2	14	3.357	195.736	3.340	149.199	G
7	8	4	12"	5'-11⅜"	0'- 4½"	3'- 1⅞"	0'- 5⅞"	0'- 3¾"	23'- 4⅛"	3'-10⅝"	23'-10"	92	56	96.588	2.065	255.994	25'- 2"	6	24'-10"	2	18	3.567	209.541	3.525	149.199	K
7	10	4	11"	5'-11⅜"	0'- 4½"	3'- 1⅞"	0'- 5⅞"	0'- 3¾"	23'- 4⅛"	3'-10⅝"	23'-10"	92	72	102.236	2.259	295.024	25'- 2"	6	24'-10"	2	22	3.777	223.347	3.711	149.199	O
8	4	4	11"	6'- 8⅞"	0'- 4½"	3'- 6⅝"	0'- 5⅞"	0'- 3¾"	26'- 3⅞"	4'- 5⅞"	26'-10"	104	24	95.312	1.817	260.455	28'- 2"	6	27'-10"	2	10	3.450	199.955	3.468	167.223	C
8	6	4	10"	6'- 8¾"	0'- 4¾"	3'- 6⅜"	0'- 6¼"	0'- 4"	26'- 3⅞"	4'- 5⅝"	26'-11"	104	40	100.960	2.054	280.389	28'- 2"	6	27'-10"	2	14	3.644	213.760	3.638	167.223	G
8	8	4	10"	6'- 8⅝"	0'- 5"	3'- 6⅛"	0'- 6½"	0'- 4¼"	26'- 3⅞"	4'- 5⅜"	26'-11"	104	56	106.608	2.292	300.249	28'- 2"	6	27'-10"	2	18	3.839	227.565	3.807	167.223	K
8	10	4	9"	6'- 8½"	0'- 5¼"	3'- 5⅞"	0'- 6⅞"	0'- 4½"	26'- 3⅞"	4'- 5⅛"	26'-11"	104	72	112.256	2.526	351.619	28'- 2"	6	27'-10"	2	22	4.033	241.371	3.977	167.223	O
9	4	4	9"	7'- 6⅛"	0'- 5¼"	3'-10¾"	0'- 6⅞"	0'- 4½"	29'- 4"	5'- ¼"	29'-11"	116	24	105.332	2.098	323.991	31'- 2"	6	30'-10"	2	10	3.699	217.979	3.727	185.247	C
9	6	4	9"	7'- 6"	0'- 5½"	3'-10½"	0'- 7¼"	0'- 4¾"	29'- 4"	5'- 0"	30'- 0"	116	40	110.980	2.341	327.354	31'- 2"	6	30'-10"	2	14	3.892	231.784	3.895	185.247	G
9	8	4	9"	7'- 5⅞"	0'- 5¾"	3'-10¼"	0'- 7⅝"	0'- 5"	29'- 4"	4'-11¾"	30'- 0"	116	56	116.628	2.581	375.366	31'- 2"	6	30'-10"	2	18	4.102	245.589	4.081	185.247	L
9	10	4	9"	7'- 5¾"	0'- 6"	3'-10"	0'- 8"	0'- 5¼"	29'- 4"	4'-11½"	30'- 1"	116	72	122.276	2.822	404.345	31'- 2"	6	30'-10"	2	22	4.295	259.395	4.248	185.247	P
9	12	4	8"	7'- 5¾"	0'- 6"	3'-10"	0'- 8"	0'- 5¼"	29'- 4"	4'-11½"	30'- 1"	116	88	127.924	3.015	462.333	31'- 2"	6	30'-10"	2	26	4.505	273.200	4.434	185.247	T
10	4	4	8"	8'- 3¼"	0'- 6¼"	4'- 2½"	0'- 8⅜"	0'- 5½"	32'- 4"	5'- 6½"	33'- 1"	128	24	115.352	2.456	400.792	34'- 2"	6	33'-10"	2	10	3.933	236.003	3.971	203.271	D
10	6	4	9"	8'- 3⅛"	0'- 6½"	4'- 2¼"	0'- 8⅝"	0'- 5¾"	32'- 4"	5'- 6¼"	33'- 1"	128	40	121.000	2.703	416.574	34'- 2"	6	33'-10"	2	14	4.123	249.808	4.136	203.271	H
10	8	4	8"	8'- 3⅛"	0'- 6½"	4'- 2¼"	0'- 8⅝"	0'- 5¾"	32'- 4"	5'- 6¼"	33'- 1"	128	56	126.648	2.896	471.785	34'- 2"	6	33'-10"	2	18	4.333	263.613	4.322	203.271	L
10	10	4	8"	8'- 3"	0'- 6¾"	4'- 2"	0'- 9"	0'- 6"	32'- 4"	5'- 6"	33'- 2"	128	72	132.296	3.141	511.840	34'- 2"	6	33'-10"	2	22	4.523	277.419	4.487	203.271	P
10	12	5	11"	8'- 2⅞"	0'- 7⅛"	4'- 1¾"	0'- 9½"	0'- 6¼"	32'- 4"	5'- 5¾"	33'- 2"	128	88	137.944	3.388	520.692	34'- 2"	6	33'-10"	2	26	4.713	291.224	4.652	203.271	T
12	6	5	9"	9'- 9⅝"	0'- 8⅛"	4'-10⅜"	0'-10⅞"	0'- 7¼"	38'- 4⅛"	6'- 7⅛"	39'- 4"	152	40	141.040	3.421	550.479	40'- 2"	6	39'-10"	2	14	4.543	285.856	4.576	239.319	H
12	8	5	9"	9'- 9½"	0'- 8⅜"	4'-10⅛"	0'-11¼"	0'- 7½"	38'- 4⅛"	6'- 6⅞"	39'- 4"	152	56	146.688	3.678	554.318	40'- 2"	6	39'-10"	2	18	4.729	299.661	4.737	239.319	L
12	10	5	9"	9'- 9½"	0'- 8⅜"	4'-10⅛"	0'-11¼"	0'- 7½"	38'- 4⅛"	6'- 6⅞"	39'- 4"	152	72	152.336	3.870	628.438	40'- 2"	6	39'-10"	2	22	4.939	313.467	4.922	239.319	P
12	12	5	9"	9'- 9⅜"	0'- 8⅝"	4'- 9⅞"	0'-11⅝"	0'- 7¾"	38'- 4⅛"	6'- 6⅝"	39'- 5"	152	88	157.984	4.123	681.877	40'- 2"	6	39'-10"	2	26	5.124	327.272	5.083	239.319	T

A COPY OF THE ORIGINAL SEALED AND SIGNED DRAWING IS ON FILE IN THE CENTRAL OFFICE.

SPECIFICATION REFERENCE

TRIPLE BOX CULVERTS

5 TO 10 FT. FILLS

VIRGINIA DEPARTMENT OF TRANSPORTATION

VDOT

ROAD AND BRIDGE STANDARDS

REVISION DATE 07/11

SHEET 2 OF 2

1004.10

BCT-20

FOR TYPICAL SECTION, NOTES AND OTHER DETAILS, REFER TO STANDARD BCT-DT.

DIMENSIONS						REINFORCING STEEL																										
SPAN	HGHT	T1	T2	T3	T4							BH1			BH2			BH3				BH4					BV1			BV2		
(FT.)	(FT.)	TOP SLAB	BOTTOM SLAB	EXTERIOR WALL (IN.)	INTERIOR WALL (IN.)	A	B	C	D	E	F	SIZE	SPACING c-c	LENGTH	SIZE	SPACING c-c	LENGTH	SIZE	SPACING c-c	a	LENGTH	SIZE	SPACING c-c	a	b	LENGTH	SIZE	SPACING c-c	LENGTH	SIZE	SPACING c-c	LENGTH
3	3	8"	8"	8"	8"	9	9'- 0"	9	9'- 0"	1	1'- 0"	4	12"	10'-3"	4	12"	11'-4"	--	---	----	----	4	12"	2'-4"	2'-8"	4'-9"	4	12"	4'-0"	4	12"	4'-0"
3	4	8"	8"	8"	8"	9	9'- 0"	9	9'- 0"	2	2'- 0"	4	12"	10'-3"	4	12"	11'-4"	--	---	----	----	4	12"	2'-4"	3'-2"	5'-3"	4	12"	5'-0"	4	12"	5'-0"
4	3	8"	8"	8"	8"	12	12'- 0"	12	12'- 0"	1	1'- 0"	4	12"	13'-3"	4	12"	14'-4"	--	---	----	----	4	12"	2'-4"	2'-8"	4'-9"	4	12"	4'-0"	4	12"	4'-0"
4	4	8"	8"	8"	8"	12	12'- 0"	12	12'- 0"	2	2'- 0"	4	12"	13'-3"	4	12"	14'-4"	--	---	----	----	4	12"	2'-4"	3'-2"	5'-3"	4	12"	5'-0"	4	12"	5'-0"
4	5	8"	8"	8"	8"	12	12'- 0"	12	12'- 0"	3	3'- 0"	4	12"	13'-3"	4	12"	14'-4"	--	---	----	----	4	12"	2'-4"	3'-8"	5'-9"	4	12"	6'-0"	4	12"	6'-0"
4	6	8"	8"	8"	8"	12	12'- 0"	12	12'- 0"	4	4'- 0"	4	12"	13'-3"	4	12"	14'-4"	--	---	----	----	4	12"	2'-4"	4'-2"	6'-3"	4	12"	7'-0"	4	12"	7'-0"
5	3	8"	8"	8"	8"	15	15'- 0"	15	15'- 0"	1	1'- 0"	4	12"	16'-4"	4	12"	17'-3"	4	12"	2'-6"	4'-9"	4	12"	2'-4"	2'-8"	4'-9"	4	12"	4'-0"	4	12"	4'-0"
5	4	8"	8"	8"	8"	15	15'- 0"	15	15'- 0"	2	2'- 0"	4	12"	16'-4"	4	12"	17'-3"	4	12"	2'-6"	4'-9"	4	12"	2'-4"	3'-2"	5'-3"	4	12"	5'-0"	4	12"	5'-0"
5	5	8"	8"	8"	8"	15	15'- 0"	15	15'- 0"	3	3'- 0"	4	12"	16'-4"	4	12"	17'-3"	3	12"	2'-6"	4'-10"	4	12"	2'-4"	3'-8"	5'-9"	4	12"	6'-0"	4	12"	6'-0"
5	6	8"	8"	8"	8"	15	15'- 0"	15	15'- 0"	4	4'- 0"	4	12"	16'-4"	4	12"	17'-3"	3	12"	2'-9"	5'-3"	4	12"	2'-4"	4'-2"	6'-3"	4	12"	7'-0"	4	12"	7'-0"
5	7	8"	8"	8"	8"	15	15'- 0"	15	15'- 0"	5	5'- 0"	4	12"	16'-4"	4	12"	17'-3"	4	12"	2'-11"	5'-7"	4	12"	2'-4"	4'-8"	6'-9"	5	12"	8'-0"	4	12"	8'-0"
6	4	9"	9"	8"	8"	18	18'- 0"	18	18'- 0"	2	2'- 0"	4	12"	19'-4"	4	12"	20'-3"	4	12"	2'-9"	5'-2"	4	12"	2'-4"	3'-3"	5'-4"	4	12"	5'-2"	4	12"	5'-2"
6	5	9"	9"	8"	8"	18	18'- 0"	18	18'- 0"	3	3'- 0"	4	11"	19'-4"	4	11"	20'-3"	4	11"	2'-9"	5'-2"	4	11"	2'-4"	3'-9"	5'-10"	4	12"	6'-2"	4	12"	6'-2"
6	6	9¼"	9¼"	8"	8"	18	18'- 0"	18	18'- 0"	4	4'- 0"	4	11"	19'-4"	4	11"	20'-3"	4	11"	2'-10"	5'-5"	4	11"	2'-4"	4'-4"	6'-4"	4	12"	7'-2"	4	12"	7'-2"
6	7	9¼"	9¼"	8"	8"	18	18'- 0"	18	18'- 0"	5	5'- 0"	4	11"	19'-4"	4	11"	20'-3"	4	11"	3'-1"	5'-9"	4	11"	2'-4"	4'-10"	6'-10"	5	12"	8'-2"	4	12"	8'-2"
6	8	9¼"	9¼"	8"	8"	18	18'- 0"	18	18'- 0"	6	6'- 0"	4	11"	19'-4"	4	11"	20'-3"	4	11"	3'-3"	6'-2"	4	11"	2'-4"	5'-4"	7'-4"	5	12"	9'-2"	4	12"	9'-2"
7	4	10½"	10½"	8"	8"	21	21'- 0"	21	21'- 0"	2	2'- 0"	4	10"	22'-4"	4	10"	23'-3"	3	10"	2'-11"	5'-8"	4	10"	2'-4"	3'-5"	5'-5"	4	12"	5'-5"	4	12"	5'-5"
7	6	10¾"	10¾"	8"	8"	21	21'- 0"	21	21'- 0"	4	4'- 0"	4	10"	22'-4"	4	10"	23'-3"	3	10"	3'-0"	5'-8"	4	10"	2'-4"	4'-5"	6'-6"	4	12"	7'-5"	4	12"	7'-5"
7	8	11"	11"	8"	8"	21	21'- 0"	21	21'- 0"	6	6'- 0"	4	9"	22'-4"	4	9"	23'-3"	3	9"	3'-5"	6'-7"	4	9"	2'-4"	5'-5"	7'-6"	5	12"	9'-6"	4	12"	9'-6"
7	10	11"	11"	8½"	8"	21	21'- 0"	21	21'- 0"	8	8'- 0"	4	9"	22'-1"	4	9"	23'-5"	--	---	----	----	5	9"	2'-6"	6'-7"	8'-9"	5	7"	11'-6"	4	12"	11'-6"
8	4	11¾"	11¾"	8"	8"	24	24'- 0"	24	24'- 0"	2	2'- 0"	4	9"	25'-4"	5	9"	26'-3"	3	9"	3'-2"	6'-1"	4	9"	2'-4"	3'-6"	5'-7"	4	11"	5'-7"	4	12"	5'-7"
8	6	12"	12"	8"	8"	24	24'- 0"	24	24'- 0"	4	4'- 0"	4	9"	25'-4"	5	9"	26'-3"	3	9"	3'-2"	6'-1"	4	9"	2'-4"	4'-6"	6'-7"	4	12"	7'-8"	4	12"	7'-8"
8	8	12¼"	12¼"	8"	8"	24	24'- 0"	24	24'- 0"	6	6'- 0"	4	9"	25'-4"	5	9"	26'-3"	3	9"	3'-6"	6'-9"	4	9"	2'-4"	5'-7"	7'-7"	5	12"	9'-8"	4	12"	9'-8"
8	10	12½"	12½"	8"	8"	24	24'- 0"	24	24'- 0"	8	8'- 0"	4	9"	25'-0"	5	9"	26'-3"	3	9"	3'-11"	7'-7"	5	9"	2'-6"	6'-9"	8'-10"	5	7"	11'-9"	4	12"	11'-9"
9	4	13"	13"	8"	8"	27	27'- 0"	27	27'- 0"	2	2'- 0"	5	9"	28'-4"	5	9"	29'-3"	3	9"	3'-4"	6'-5"	4	9"	2'-9"	3'-7"	6'-1"	4	10"	5'-10"	4	12"	5'-10"
9	6	13"	13"	8"	8"	27	27'- 0"	27	27'- 0"	4	4'- 0"	5	9"	28'-4"	5	9"	29'-3"	3	9"	3'-4"	6'-5"	4	9"	2'-9"	4'-7"	7'-1"	4	12"	7'-10"	4	12"	7'-10"
9	8	13¼"	13¼"	8"	8"	27	27'- 0"	27	27'- 0"	6	6'- 0"	5	9"	28'-4"	5	9"	29'-3"	3	9"	3'-7"	6'-11"	4	9"	2'-9"	5'-8"	8'-1"	5	12"	9'-10"	4	12"	9'-10"
9	10	13¼"	13¼"	8"	8"	27	27'- 0"	27	27'- 0"	8	8'- 0"	5	9"	28'-0"	5	9"	29'-3"	3	9"	4'-0"	7'-9"	5	9"	2'-11"	6'-10"	9'-4"	6	8½"	11'-10"	4	12"	11'-10"
9	12	13½"	13½"	9½	8"	27	27'- 0"	27	27'- 0"	10	10'- 0"	5	8"	28'-3"	5	8"	29'-6"	4	8"	4'-5"	8'-6"	5	9"	2'-11"	7'-10"	10'-4"	6	7½"	13'-11"	4	12"	13'-11"
10	4	14¼"	14¼"	8"	8"	30	30'- 0"	30	30'- 0"	2	2'- 0"	5	9"	31'-0"	5	9"	32'-3"	--	---	----	----	5	9"	2'-11"	3'-11"	6'-5"	4	10"	6'-0"	4	12"	6'-0"
10	6	14½"	14½"	8"	8"	30	30'- 0"	30	30'- 0"	4	4'- 0"	5	9"	31'-3"	5	9"	32'-3"	3	9"	3'-6"	6'-10"	4	9"	2'-9"	4'-9"	7'-2"	4	12"	8'-0"	4	12"	8'-0"
10	8	14½"	14½"	8"	8"	30	30'- 0"	30	30'- 0"	6	6'- 0"	5	9"	31'-0"	5	9"	32'-3"	--	---	----	----	5	9"	2'-11"	5'-11"	8'-5"	5	12"	10'-0"	4	12"	10'-0"
10	10	14½"	14½"	8"	8"	30	30'- 0"	30	30'- 0"	8	8'- 0"	5	9"	31'-0"	5	9"	32'-3"	3	9"	4'-1"	7'-11"	5	9"	2'-11"	6'-11"	9'-5"	6	9"	12'-0"	4	12"	12'-0"
10	12	14¾"	14¾"	9½	8"	30	30'- 0"	30	30'- 0"	10	10'- 0"	5	9"	31'-0"	5	9"	32'-6"	3	9"	4'-6"	8'-9"	6	9"	3'-0"	8'-1"	10'-8"	6	7½"	14'-1"	4	12"	14'-1"
12	6	17"	17"	8"	8"	36	36'- 0"	36	36'- 0"	4	4'- 0"	6	9"	37'-3"	6	9"	38'-4"	3	9"	3'-11"	7'-8"	4	9"	3'-2"	4'-11"	7'-10"	4	12"	8'-6"	4	12"	8'-6"
12	8	17"	17"	8"	8"	36	36'- 0"	36	36'- 0"	6	6'- 0"	6	9"	37'-3"	6	9"	38'-4"	3	9"	3'-11"	7'-8"	4	9"	3'-2"	5'-11"	8'-10"	5	12"	10'-6"	4	12"	10'-6"
12	10	17¼"	17¼"	8"	8"	36	36'- 0"	36	36'- 0"	8	8'- 0"	6	9"	37'-0"	6	9"	38'-4"	3	9"	4'-4"	8'-5"	5	9"	3'-4"	7'-2"	10'-1"	6	9"	12'-6"	4	12"	12'-6"
12	12	17¼"	17¼"	9½	8"	36	36'- 0"	36	36'- 0"	10	10'- 0"	6	9"	37'-0"	6	9"	38'-7"	3	9"	4'-9"	9'-2"	6	9"	3'-5"	8'-4"	11'-4"	5	5"	14'-6"	4	12"	14'-6"

A COPY OF THE ORIGINAL SEALED AND SIGNED DRAWING IS ON FILE IN THE CENTRAL OFFICE

VDOT
ROAD AND BRIDGE STANDARDS

SHEET 1 OF 2 | REVISION DATE
1004.11 | 07/11

TRIPLE BOX CULVERTS

10 TO 20 FT. FILLS

VIRGINIA DEPARTMENT OF TRANSPORTATION

SPECIFICATION REFERENCE

BCT-20

FOR TYPICAL SECTION, NOTES AND OTHER DETAILS, REFER TO STANDARD BCT-DT.

SPAN	HGHT	REINFORCING STEEL BT1												REINFORCING STEEL (LBS/LONG. JT)	QUAN./LF		HEADWALLS								WINGWALL
															CONCRETE CLASS A4 (CY/LF)	REINFORCING STEEL (LBS/LF)	G	HW1							
(FT.)	(FT.)	SIZE	SPACING c-c	a	b	c	d	e	f	g	LENGTH	NO. BL1 #4 BARS	NO. BL2 #3 BARS				HEADWALL LENGTH	SIZE	LENGTH	NO. HW2 BARS	NO. HW3 BARS	INLET CONCRETE CL. A4 (CY)	INLET REINFORCING STEEL (LBS)	OUTLET CONCRETE CL. A4 (CY)	OUTLET REINFORCING STEEL (LBS)	
3	3	4	12"	2'-7"	0'- 4"	1'-10"	0'- 5 1/8"	0'- 3 1/4"	11'-3"	1'-3"	11'-9"	44	16	42.388	0.989	108.604	13'- 2"	6	12'-10"	2	8	1.827	102.932	1.808	77.103	A
3	4	4	12"	2'-7"	0'- 4"	1'-10"	0'- 5 1/8"	0'- 3 1/4"	11'-3"	1'-3"	11'-9"	44	24	45.212	1.087	116.956	13'- 2"	6	12'-10"	2	10	1.932	109.835	1.901	77.103	C
4	3	4	12"	3'-5"	0'- 4"	2'-3"	0'- 5 1/8"	0'- 3 1/4"	14'-3"	1'-10"	14'-9"	56	16	52.408	1.136	128.644	16'- 2"	6	15'-10"	2	8	2.131	120.956	2.121	95.127	A
4	4	4	12"	3'-5"	0'- 4"	2'-3"	0'- 5 1/8"	0'- 3 1/4"	14'-3"	1'-10"	14'-9"	56	24	55.232	1.234	136.996	16'- 2"	6	15'-10"	2	10	2.236	127.859	2.214	95.127	C
4	5	4	12"	3'-5"	0'- 4"	2'-3"	0'- 5 1/8"	0'- 3 1/4"	14'-3"	1'-10"	14'-9"	56	32	58.056	1.332	145.348	16'- 2"	6	15'-10"	2	12	2.341	134.761	2.307	95.127	E
4	6	4	12"	3'-5"	0'- 4"	2'-3"	0'- 5 1/8"	0'- 3 1/4"	14'-3"	1'-10"	14'-9"	56	40	60.880	1.430	153.700	16'- 2"	6	15'-10"	2	14	2.446	141.664	2.399	95.127	G
5	3	4	12"	4'-2"	0'- 4"	2'-8"	0'- 5 1/8"	0'- 3 1/4"	17'-4"	2'-5"	17'-9"	68	16	62.428	1.281	161.335	19'- 2"	6	18'-10"	2	8	2.434	138.980	2.435	113.151	A
5	4	4	12"	4'-2"	0'- 4"	2'-8"	0'- 5 1/8"	0'- 3 1/4"	17'-4"	2'-5"	17'-9"	68	24	65.252	1.379	169.687	19'- 2"	6	18'-10"	2	10	2.539	145.883	2.527	113.151	C
5	5	4	12"	4'-2"	0'- 4"	2'-8"	0'- 5 1/8"	0'- 3 1/4"	17'-4"	2'-5"	17'-9"	68	32	68.076	1.478	172.608	19'- 2"	6	18'-10"	2	12	2.644	152.785	2.620	113.151	E
5	6	4	12"	4'-2"	0'- 4"	2'-8"	0'- 5 1/8"	0'- 3 1/4"	17'-4"	2'-5"	17'-9"	68	40	70.900	1.576	181.562	19'- 2"	6	18'-10"	2	14	2.750	159.688	2.713	113.151	G
5	7	4	12"	4'-2"	0'- 4"	2'-8"	0'- 5 1/8"	0'- 3 1/4"	17'-4"	2'-5"	17'-9"	68	48	73.724	1.673	202.880	19'- 2"	6	18'-10"	2	16	2.855	166.591	2.806	113.151	I
6	4	4	12"	4'-11"	0'- 5"	3'-0"	0'- 6 5/8"	0'- 4 1/4"	20'-4"	2'-11"	20'-10"	80	24	75.272	1.653	191.868	22'- 2"	6	21'-10"	2	10	2.799	163.907	2.797	131.175	C
6	5	4	11"	4'-11"	0'- 5"	3'-0"	0'- 6 5/8"	0'- 4 1/4"	20'-4"	2'-11"	20'-10"	80	32	78.096	1.751	210.223	22'- 2"	6	21'-10"	2	12	2.904	170.809	2.889	131.175	E
6	6	4	11"	4'-11"	0'- 5 1/4"	3'-0"	0'- 7"	0'- 4 1/2"	20'-4"	2'-10"	20'-11"	80	40	80.920	1.881	219.582	22'- 2"	6	21'-10"	2	14	3.016	177.712	2.990	131.175	H
6	7	4	11"	4'-11"	0'- 5 1/4"	3'-0"	0'- 7"	0'- 4 1/2"	20'-4"	2'-10"	20'-11"	80	48	83.744	1.978	235.377	22'- 2"	6	21'-10"	2	16	3.121	184.615	3.082	131.175	J
6	8	4	11"	4'-11"	0'- 5 1/4"	3'-0"	0'- 7"	0'- 4 1/2"	20'-4"	2'-10"	20'-11"	80	56	86.568	2.076	245.767	22'- 2"	6	21'-10"	2	18	3.227	191.517	3.175	131.175	L
7	4	4	10"	5'-7"	0'- 6 1/2"	3'-5"	0'- 8 3/4"	0'- 5 3/4"	23'-4"	3'-3"	24'-1"	92	24	85.292	2.036	231.430	25'- 2"	6	24'-10"	2	10	3.031	181.931	3.039	149.199	D
7	6	4	10"	5'-7"	0'- 6 3/4"	3'-5"	0'- 9"	0'- 6"	23'-4"	3'-2"	24'-1"	92	40	90.940	2.269	249.062	25'- 2"	6	24'-10"	2	14	3.228	195.736	3.211	149.199	H
7	8	4	9"	5'-7"	0'- 7"	3'-5"	0'- 9 3/8"	0'- 6 1/4"	23'-4"	3'-2"	24'-2"	92	56	96.588	2.500	291.625	25'- 2"	6	24'-10"	2	18	3.425	209.541	3.383	149.199	L
7	10	4	9"	5'-7"	0'- 7"	3'-5"	0'- 9 3/8"	0'- 6 1/4"	23'-5"	3'-2"	24'-3"	92	72	102.236	2.731	332.978	25'- 2"	6	24'-10"	2	22	3.635	223.347	3.569	149.199	P
8	4	4	9"	6'-3"	0'- 7 3/4"	3'-10"	0'-10 1/2"	0'- 7"	26'-4"	3'-7"	27'-3"	104	24	95.312	2.431	300.279	28'- 2"	6	27'-10"	2	10	3.233	199.955	3.251	167.223	D
8	6	4	9"	6'-3"	0'- 8"	3'-10"	0'-10 7/8"	0'- 7 1/4"	26'-4"	3'-7"	27'-3"	104	40	100.960	2.668	317.493	28'- 2"	6	27'-10"	2	14	3.428	213.760	3.421	167.223	H
8	8	4	9"	6'-3"	0'- 8 1/4"	3'-10"	0'-11 1/8"	0'- 7 1/2"	26'-4"	3'-6"	27'-4"	104	56	106.608	2.905	344.092	28'- 2"	6	27'-10"	2	18	3.622	227.565	3.591	167.223	L
8	10	4	9"	6'-3"	0'- 8 1/2"	3'-10"	0'-11 1/2"	0'- 7 3/4"	26'-4"	3'-6"	27'-4"	104	72	112.256	3.139	400.681	28'- 2"	6	27'-10"	2	22	3.817	241.371	3.760	167.223	P
9	4	5	9"	7'-0"	0'- 9"	4'-3"	1'- 1/8"	0'- 8 1/8"	29'-4"	4'-0"	30'-5"	116	24	105.332	2.871	390.708	31'- 2"	6	30'-10"	2	10	3.412	217.979	3.440	185.247	D
9	6	5	9"	7'-0"	0'- 9"	4'-3"	1'- 1/8"	0'- 8 1/8"	29'-4"	4'-0"	30'-5"	116	40	110.980	3.067	406.744	31'- 2"	6	30'-10"	2	14	3.622	231.784	3.625	185.247	H
9	8	5	9"	7'-0"	0'- 9 1/4"	4'-3"	1'- 1/2"	0'- 8 3/8"	29'-4"	4'-0"	30'-5"	116	56	116.628	3.308	433.034	31'- 2"	6	30'-10"	2	18	3.814	245.589	3.793	185.247	L
9	10	5	9"	7'-0"	0'- 9 1/4"	4'-3"	1'- 1/2"	0'- 8 3/8"	29'-4"	4'-0"	30'-5"	116	72	122.276	3.501	497.976	31'- 2"	6	30'-10"	2	22	4.025	259.395	3.978	185.247	P
9	12	5	8"	7'-1"	0'- 9 1/2"	4'-3"	1'- 7/8"	0'- 8 5/8"	29'-7"	3'-11"	30'-9"	116	88	127.924	3.869	590.289	31'- 2"	6	30'-10"	2	26	4.217	273.200	4.146	185.247	T
10	4	5	9"	7'-8"	0'-10 1/4"	4'-8"	1'- 1 7/8"	0'- 9 3/8"	32'-3"	4'-5"	33'-7"	128	24	115.352	3.361	425.479	34'- 2"	6	33'-10"	2	10	3.567	236.003	3.605	203.271	D
10	6	5	9"	7'-8"	0'-10 1/2"	4'-8"	1'- 2 1/4"	0'- 9 5/8"	32'-3"	4'-4"	33'-7"	128	40	121.000	3.607	442.615	34'- 2"	6	33'-10"	2	14	3.757	249.808	3.771	203.271	H
10	8	5	9"	7'-8"	0'-10 1/2"	4'-8"	1'- 2 1/4"	0'- 9 5/8"	32'-3"	4'-4"	33'-7"	128	56	126.648	3.803	470.995	34'- 2"	6	33'-10"	2	18	3.968	263.613	3.956	203.271	L
10	10	5	9"	7'-8"	0'-10 1/2"	4'-8"	1'- 2 1/4"	0'- 9 5/8"	32'-3"	4'-4"	33'-7"	128	72	132.296	3.996	531.092	34'- 2"	6	33'-10"	2	22	4.178	277.419	4.141	203.271	P
10	12	5	9"	7'-9"	0'-10 3/4"	4'-8"	1'- 2 5/8"	0'- 9 7/8"	32'-6"	4'-4"	33'-11"	128	88	137.944	4.372	598.219	34'- 2"	6	33'-10"	2	26	4.368	291.224	4.307	203.271	T
12	6	6	9"	9'-1"	1'- 1"	5'-5"	1'- 5 5/8"	1'- 0"	38'-3"	5'-3"	39'-11"	152	40	141.040	4.725	656.619	40'- 2"	6	39'-10"	2	14	4.013	285.856	4.046	239.319	I
12	8	6	9"	9'-1"	1'- 1"	5'-5"	1'- 5 5/8"	1'- 0"	38'-3"	5'-3"	39'-11"	152	56	146.688	4.920	682.088	40'- 2"	6	39'-10"	2	18	4.223	299.661	4.232	239.319	M
12	10	6	9"	9'-1"	1'- 1 1/4"	5'-5"	1'- 6"	1'- 1/4"	38'-3"	5'-2"	39'-11"	152	72	152.336	5.172	746.974	40'- 2"	6	39'-10"	2	22	4.409	313.467	4.392	239.319	Q
12	12	6	9"	9'-2"	1'- 1 1/4"	5'-5"	1'- 6"	1'- 1/4"	38'-6"	5'-2"	40'-2"	152	88	157.984	5.502	818.885	40'- 2"	6	39'-10"	2	26	4.619	327.272	4.578	239.319	U

A COPY OF THE ORIGINAL SEALED AND SIGNED DRAWING IS ON FILE IN THE CENTRAL OFFICE.

SPECIFICATION REFERENCE

TRIPLE BOX CULVERTS

10 TO 20 FT. FILLS

VIRGINIA DEPARTMENT OF TRANSPORTATION

VDOT

ROAD AND BRIDGE STANDARDS

REVISION DATE 07/11

SHEET 2 OF 2

1004.12

BCT-30

FOR TYPICAL SECTION, NOTES AND OTHER DETAILS, REFER TO STANDARD BCT-DT.

DIMENSIONS						REINFORCING STEEL																										
SPAN	HGHT	T1	T2	T3	T4							BH1			BH2			BH3				BH4					BV1			BV2		
(FT.)	(FT.)	TOP SLAB	BOTTOM SLAB	EXTERIOR WALL (IN.)	INTERIOR WALL (IN.)	A	B	C	D	E	F	SIZE	SPACING c-c	LENGTH	SIZE	SPACING c-c	LENGTH	SIZE	SPACING c-c	a	LENGTH	SIZE	SPACING c-c	a	b	LENGTH	SIZE	SPACING c-c	LENGTH	SIZE	SPACING c-c	LENGTH
3	3	8"	8"	8"	8"	9	9'- 0"	9	9'- 0"	1	1'- 0"	4	12"	10' - 3"	4	12"	11' - 4"	--	---	----	----	4	12"	2' - 4"	2' - 8"	4' - 9"	4	12"	4' - 0"	4	12"	4' - 0"
3	4	8"	8"	8"	8"	9	9'- 0"	9	9'- 0"	2	2'- 0"	4	12"	10' - 3"	4	12"	11' - 4"	--	---	----	----	4	12"	2' - 4"	3' - 2"	5' - 3"	4	12"	5' - 0"	4	12"	5' - 0"
4	3	8½"	8½"	8"	8"	12	12'- 0"	12	12'- 0"	1	1'- 0"	4	12"	13' - 3"	4	12"	14' - 4"	--	---	----	----	4	12"	2' - 4"	2' - 9"	4' - 9"	4	12"	4' - 1"	4	12"	4' - 1"
4	4	8½"	8½"	8"	8"	12	12'- 0"	12	12'- 0"	2	2'- 0"	4	12"	13' - 3"	4	12"	14' - 4"	--	---	----	----	4	12"	2' - 4"	3' - 3"	5' - 3"	4	12"	5' - 1"	4	12"	5' - 1"
4	5	8½"	8½"	8"	8"	12	12'- 0"	12	12'- 0"	3	3'- 0"	4	12"	13' - 3"	4	12"	14' - 4"	--	---	----	----	4	12"	2' - 4"	3' - 9"	5' - 9"	4	12"	6' - 1"	4	12"	6' - 1"
4	6	8½"	8½"	8"	8"	12	12'- 0"	12	12'- 0"	4	4'- 0"	4	12"	13' - 3"	4	12"	14' - 4"	--	---	----	----	4	12"	2' - 4"	4' - 3"	6' - 3"	5	12"	7' - 1"	4	12"	7' - 1"
5	3	10"	10"	8"	8"	15	15'- 0"	15	15'- 0"	1	1'- 0"	4	12"	16' - 4"	4	12"	17' - 3"	3	12"	2' - 6"	4' - 10"	4	12"	2' - 4"	2' - 10"	4' - 11"	4	12"	4' - 4"	4	12"	4' - 4"
5	4	10"	10"	8"	8"	15	15'- 0"	15	15'- 0"	2	2'- 0"	4	12"	16' - 4"	4	12"	17' - 3"	3	12"	2' - 6"	4' - 10"	4	12"	2' - 4"	3' - 4"	5' - 5"	4	12"	5' - 4"	4	12"	5' - 4"
5	5	10¼"	10¼"	8"	8"	15	15'- 0"	15	15'- 0"	3	3'- 0"	4	12"	16' - 4"	4	12"	17' - 3"	3	12"	2' - 9"	5' - 3"	4	12"	2' - 4"	3' - 11"	5' - 11"	4	12"	6' - 4"	4	12"	6' - 4"
5	6	10"	10"	8"	8"	15	15'- 0"	15	15'- 0"	4	4'- 0"	4	12"	16' - 4"	4	12"	17' - 3"	4	12"	2' - 11"	5' - 6"	4	12"	2' - 4"	4' - 4"	6' - 5"	5	12"	7' - 4"	4	12"	7' - 4"
5	7	10"	10"	8"	8"	15	15'- 0"	15	15'- 0"	5	5'- 0"	4	12"	16' - 4"	4	12"	17' - 3"	4	12"	3' - 1"	5' - 11"	4	12"	2' - 4"	4' - 10"	6' - 11"	5	12"	8' - 3"	4	12"	8' - 3"
6	4	12"	12"	8"	8"	18	18'- 0"	18	18'- 0"	2	2'- 0"	4	10"	19' - 4"	4	10"	20' - 3"	--	---	----	----	4	10"	2' - 4"	3' - 6"	5' - 7"	4	12"	5' - 8"	4	12"	5' - 8"
6	5	12¼"	12¼"	8"	8"	18	18'- 0"	18	18'- 0"	3	3'- 0"	4	10"	19' - 4"	4	10"	20' - 3"	--	---	----	----	4	10"	2' - 4"	4' - 1"	6' - 1"	4	12"	6' - 8"	4	12"	6' - 8"
6	6	12¼"	12¼"	8"	8"	18	18'- 0"	18	18'- 0"	4	4'- 0"	4	10"	19' - 4"	4	10"	20' - 3"	--	---	----	----	4	10"	2' - 4"	4' - 7"	6' - 7"	4	12"	7' - 8"	4	12"	7' - 8"
6	7	11½"	11½"	8"	8"	18	18'- 0"	18	18'- 0"	5	5'- 0"	4	10"	19' - 4"	4	10"	20' - 3"	3	10"	3' - 3"	6' - 3"	4	10"	2' - 4"	5' - 0"	7' - 0"	5	12"	8' - 6"	4	12"	8' - 6"
6	8	11¾"	11¾"	8"	8"	18	18'- 0"	18	18'- 0"	6	6'- 0"	4	10"	19' - 0"	4	10"	20' - 3"	--	---	----	----	5	10"	2' - 6"	5' - 8"	7' - 9"	5	9"	9' - 7"	4	12"	9' - 7"
7	4	13¼"	13¼"	8"	8"	21	21'- 0"	21	21'- 0"	2	2'- 0"	4	9"	22' - 4"	5	9"	23' - 3"	--	---	----	----	4	9"	2' - 4"	3' - 8"	5' - 8"	4	12"	5' - 10"	4	12"	5' - 10"
7	6	13¼"	13¼"	8"	8"	21	21'- 0"	21	21'- 0"	4	4'- 0"	4	9"	22' - 4"	5	9"	23' - 3"	--	---	----	----	4	9"	2' - 4"	4' - 8"	6' - 8"	4	12"	7' - 10"	4	12"	7' - 10"
7	8	13¼"	13¼"	8"	8"	21	21'- 0"	21	21'- 0"	6	6'- 0"	4	9"	22' - 4"	5	9"	23' - 3"	3	9"	3' - 7"	6' - 11"	4	9"	2' - 4"	5' - 8"	7' - 8"	5	9"	9' - 10"	4	12"	9' - 10"
7	10	13¼"	13¼"	9½"	8"	21	21'- 0"	21	21'- 0"	8	8'- 0"	4	9"	22' - 3"	5	9"	23' - 6"	3	9"	4' - 0"	7' - 9"	5	9"	2' - 6"	6' - 10"	8' - 11"	7	11½"	11' - 10"	4	12"	11' - 10"
8	4	15"	15"	8"	8"	24	24'- 0"	24	24'- 0"	2	2'- 0"	5	9"	25' - 4"	5	9"	26' - 3"	--	---	----	----	4	9"	2' - 9"	3' - 9"	6' - 3"	4	12"	6' - 2"	4	12"	6' - 2"
8	6	15"	15"	8"	8"	24	24'- 0"	24	24'- 0"	4	4'- 0"	5	9"	25' - 4"	5	9"	26' - 3"	--	---	----	----	4	9"	2' - 9"	4' - 9"	7' - 3"	4	12"	8' - 1"	4	12"	8' - 1"
8	8	15"	15"	8"	8"	24	24'- 0"	24	24'- 0"	6	6'- 0"	5	9"	25' - 4"	5	9"	26' - 3"	3	9"	3' - 9"	7' - 3"	4	9"	2' - 9"	5' - 9"	8' - 3"	5	9½"	10' - 1"	4	12"	10' - 1"
8	10	15"	15"	9½"	8"	24	24'- 0"	24	24'- 0"	8	8'- 0"	5	9"	25' - 3"	5	9"	26' - 6"	3	9"	4' - 1"	8' - 0"	5	9"	2' - 11"	6' - 11"	9' - 6"	7	11½"	12' - 1"	4	12"	12' - 1"
9	4	16½"	16½"	8"	8"	27	27'- 0"	27	27'- 0"	2	2'- 0"	5	8"	28' - 4"	5	8"	29' - 3"	--	---	----	----	4	8"	2' - 9"	3' - 11"	6' - 4"	4	12"	6' - 5"	4	12"	6' - 5"
9	6	16½"	16½"	8"	8"	27	27'- 0"	27	27'- 0"	4	4'- 0"	5	9"	28' - 4"	5	9"	29' - 3"	--	---	----	----	4	9"	2' - 9"	4' - 11"	7' - 4"	4	12"	8' - 4"	4	12"	8' - 4"
9	8	16½"	16½"	8"	8"	27	27'- 0"	27	27'- 0"	6	6'- 0"	5	8"	28' - 4"	5	8"	29' - 3"	3	8"	3' - 10"	7' - 6"	4	8"	2' - 9"	5' - 11"	8' - 4"	5	9½"	10' - 4"	4	12"	10' - 4"
9	10	16½"	16½"	9"	8"	27	27'- 0"	27	27'- 0"	8	8'- 0"	5	8"	28' - 2"	5	8"	29' - 6"	3	8"	4' - 3"	8' - 3"	5	8"	2' - 11"	7' - 1"	9' - 7"	7	11½"	12' - 4"	4	12"	12' - 4"
9	12	16¾"	16¾"	11"	8"	27	27'- 0"	27	27'- 0"	10	10'- 0"	6	9"	28' - 0"	6	9"	29' - 9"	--	---	----	----	7	9"	3' - 7"	8' - 6"	11' - 7"	6	7½"	14' - 5"	4	12"	14' - 5"
10	4	18¼"	18¼"	8"	8"	30	30'- 0"	30	30'- 0"	2	2'- 0"	6	9"	31' - 3"	6	9"	32' - 3"	--	---	----	----	4	9"	3' - 2"	4' - 1"	6' - 11"	4	12"	6' - 8"	4	11"	6' - 8"
10	6	18¼"	18¼"	8"	8"	30	30'- 0"	30	30'- 0"	4	4'- 0"	6	9"	31' - 3"	6	9"	32' - 3"	--	---	----	----	4	9"	3' - 2"	5' - 1"	7' - 11"	4	12"	8' - 8"	4	11"	8' - 8"
10	8	18¼"	18¼"	8"	8"	30	30'- 0"	30	30'- 0"	6	6'- 0"	6	9"	31' - 3"	6	9"	32' - 3"	3	9"	4' - 0"	7' - 9"	4	9"	3' - 2"	6' - 1"	8' - 11"	5	9½"	10' - 8"	4	11"	10' - 8"
10	10	18½"	18½"	9"	8"	30	30'- 0"	30	30'- 0"	8	8'- 0"	6	9"	31' - 2"	6	9"	32' - 5"	3	9"	4' - 5"	8' - 7"	5	9"	3' - 4"	7' - 3"	10' - 2"	6	8"	12' - 9"	4	11"	12' - 9"
10	12	18½"	18½"	11"	8"	30	30'- 0"	30	30'- 0"	10	10'- 0"	6	9"	31' - 3"	6	9"	32' - 9"	4	9"	4' - 10"	9' - 4"	6	9"	3' - 5"	8' - 5"	11' - 5"	5	5½"	14' - 9"	4	11"	14' - 9"
12	6	21½"	21½"	8"	8"	36	36'- 0"	36	36'- 0"	4	4'- 0"	6	8"	37' - 3"	6	8"	38' - 4"	--	---	----	----	4	8"	3' - 2"	5' - 4"	8' - 2"	4	12"	9' - 3"	4	10"	9' - 3"
12	8	21½"	21½"	8"	8"	36	36'- 0"	36	36'- 0"	6	6'- 0"	6	8"	37' - 3"	6	8"	38' - 4"	3	8"	4' - 3"	8' - 4"	4	8"	3' - 2"	6' - 4"	9' - 2"	5	9"	11' - 3"	4	10"	11' - 3"
12	10	21½"	21½"	8½"	8"	36	36'- 0"	36	36'- 0"	8	8'- 0"	6	8"	37' - 1"	6	8"	38' - 4"	3	8"	4' - 8"	9' - 1"	5	8"	3' - 4"	7' - 6"	10' - 5"	6	8"	13' - 3"	4	10"	13' - 3"
12	12	21¾"	21¾"	11"	8"	36	36'- 0"	36	36'- 0"	10	10'- 0"	6	8"	37' - 6"	6	8"	38' - 10"	4	8"	5' - 1"	9' - 10"	5	8"	3' - 4"	8' - 6"	11' - 5"	5	5½"	15' - 3"	4	10"	15' - 3"

A COPY OF THE ORIGINAL SEALED AND SIGNED DRAWING IS ON FILE IN THE CENTRAL OFFICE.

VDOT
ROAD AND BRIDGE STANDARDS

SHEET 1 OF 2 | REVISION DATE
1004.13 | 07/11

TRIPLE BOX CULVERTS

20 TO 30 FT. FILLS

VIRGINIA DEPARTMENT OF TRANSPORTATION

SPECIFICATION REFERENCE

FOR TYPICAL SECTION, NOTES AND OTHER DETAILS, REFER TO STANDARD BCT-DT.

BCT-30

SPAN	HGHT	REINFORCING STEEL BT1												REINFORCING STEEL (LBS/LONG. JT)	QUAN./LF		HEADWALLS								WINGWALL
																	G	HW1							
(FT.)	(FT.)	SIZE	SPACING c-c	a	b	c	d	e	f	g	LENGTH	NO. BL1 #4 BARS	NO. BL2 #3 BARS		CONCRETE CLASS A4 (CY/LF)	REINFORCING STEEL (LBS/LF)	HEADWALL LENGTH	SIZE	LENGTH	NO. HW2 BARS	NO. HW3 BARS	INLET CONCRETE CL. A4 (CY)	INLET REINFORCING STEEL (LBS)	OUTLET CONCRETE CL. A4 (CY)	OUTLET REINFORCING STEEL (LBS)	
3	3	4	12"	2'-7"	0'- 4"	1'-10"	0'- 5⅛"	0'- 3¼"	11'-3"	1'-3"	11'-9"	44	16	42.388	0.989	108.604	13'- 2"	6	12'-10"	2	8	1.827	102.932	1.808	77.103	A
3	4	4	12"	2'-7"	0'- 4"	1'-10"	0'- 5⅛"	0'- 3¼"	11'-3"	1'-3"	11'-9"	44	24	45.212	1.087	116.956	13'- 2"	6	12'-10"	2	10	1.932	109.835	1.901	77.103	C
4	3	4	12"	3'-4"	0'- 4½"	2'-3"	0'- 5⅞"	0'- 3¾"	14'-3"	1'-9"	14'-10"	56	16	52.408	1.181	129.180	16'- 2"	6	15'-10"	2	8	2.118	120.956	2.108	95.127	A
4	4	4	12"	3'-4"	0'- 4½"	2'-3"	0'- 5⅞"	0'- 3¾"	14'-3"	1'-9"	14'-10"	56	24	55.232	1.279	137.532	16'- 2"	6	15'-10"	2	10	2.223	127.859	2.201	95.127	C
4	5	4	12"	3'-4"	0'- 4½"	2'-3"	0'- 5⅞"	0'- 3¾"	14'-3"	1'-9"	14'-10"	56	32	58.056	1.377	145.884	16'- 2"	6	15'-10"	2	12	2.328	134.761	2.294	95.127	E
4	6	4	12"	3'-4"	0'- 4½"	2'-3"	0'- 5⅞"	0'- 3¾"	14'-3"	1'-9"	14'-10"	56	40	60.880	1.475	159.548	16'- 2"	6	15'-10"	2	14	2.433	141.664	2.387	95.127	G
5	3	4	12"	4'-0"	0'- 6"	2'-8"	0'- 8"	0'- 5¼"	17'-4"	2'-1"	18'-0"	68	16	62.428	1.500	158.051	19'- 2"	6	18'-10"	2	8	2.383	138.980	2.383	113.151	B
5	4	4	12"	4'-0"	0'- 6"	2'-8"	0'- 8"	0'- 5¼"	17'-4"	2'-1"	18'-0"	68	24	65.252	1.598	166.403	19'- 2"	6	18'-10"	2	10	2.488	145.883	2.476	113.151	D
5	5	4	12"	4'-0"	0'- 6¼"	2'-8"	0'- 8⅜"	0'- 5½"	17'-4"	2'-0"	18'-0"	68	32	68.076	1.723	175.587	19'- 2"	6	18'-10"	2	12	2.584	152.785	2.560	113.151	F
5	6	4	12"	4'-0"	0'- 6"	2'-8"	0'- 8"	0'- 5¼"	17'-4"	2'-1"	18'-0"	68	40	70.900	1.793	195.997	19'- 2"	6	18'-10"	2	14	2.698	159.688	2.662	113.151	H
5	7	4	12"	4'-0"	0'- 6"	2'-8"	0'- 8"	0'- 5¼"	17'-4"	2'-1"	18'-0"	68	48	73.724	1.891	206.168	19'- 2"	6	18'-10"	2	16	2.803	166.591	2.754	113.151	J
6	4	4	10"	4'-8"	0'- 8"	3'-0"	0'-10⅞"	0'- 7¼"	20'-4"	2'-5"	21'-3"	80	24	75.272	2.035	200.609	22'- 2"	6	21'-10"	2	10	2.684	163.907	2.683	131.175	D
6	5	4	10"	4'-8"	0'- 8⅛"	3'-0"	0'-11⅛"	0'- 7½"	20'-4"	2'-4"	21'-4"	80	32	78.096	2.165	209.517	22'- 2"	6	21'-10"	2	12	2.779	170.809	2.764	131.175	F
6	6	4	10"	4'-8"	0'- 8⅛"	3'-0"	0'-11⅛"	0'- 7½"	20'-4"	2'-4"	21'-4"	80	40	80.920	2.264	218.137	22'- 2"	6	21'-10"	2	14	2.884	177.712	2.857	131.175	H
6	7	4	10"	4'-9"	0'- 7½"	3'-0"	0'-10⅛"	0'- 6¾"	20'-4"	2'-6"	21'-3"	80	48	83.744	2.265	243.488	22'- 2"	6	21'-10"	2	16	3.022	184.615	2.983	131.175	J
6	8	4	10"	4'-8"	0'- 7¾"	3'-0"	0'-10½"	0'- 7"	20'-4"	2'-5"	21'-3"	80	56	86.568	2.394	262.965	22'- 2"	6	21'-10"	2	18	3.116	191.517	3.065	131.175	L
7	4	4	9"	5'-4"	0'- 9⅛"	3'-5"	1'- ⅝"	0'- 8½"	23'-4"	2'-9"	24'-5"	92	24	85.292	2.436	262.329	25'- 2"	6	24'-10"	2	10	2.884	181.931	2.892	149.199	D
7	6	4	9"	5'-4"	0'- 9⅛"	3'-5"	1'- ⅝"	0'- 8½"	23'-4"	2'-9"	24'-5"	92	40	90.940	2.632	279.924	25'- 2"	6	24'-10"	2	14	3.094	195.736	3.078	149.199	H
7	8	4	9"	5'-4"	0'- 9⅛"	3'-5"	1'- ⅝"	0'- 8½"	23'-4"	2'-9"	24'-5"	92	56	96.588	2.826	325.580	25'- 2"	6	24'-10"	2	18	3.305	209.541	3.263	149.199	L
7	10	4	9"	5'-6"	0'- 9⅛"	3'-5"	1'- ⅝"	0'- 8½"	23'-7"	2'-9"	24'-8"	92	72	102.236	3.132	384.973	25'- 2"	6	24'-10"	2	22	3.515	223.347	3.448	149.199	P
8	4	5	9"	6'-0"	0'-11"	3'-10"	1'- 3"	0'-10⅛"	26'-4"	3'-1"	27'-8"	104	24	95.312	2.963	345.960	28'- 2"	6	27'-10"	2	10	3.029	199.955	3.047	167.223	D
8	6	5	9"	6'-0"	0'-11"	3'-10"	1'- 3"	0'-10⅛"	26'-4"	3'-1"	27'-8"	104	40	100.960	3.159	363.554	28'- 2"	6	27'-10"	2	14	3.239	213.760	3.233	167.223	H
8	8	5	9"	6'-0"	0'-11"	3'-10"	1'- 3"	0'-10⅛"	26'-4"	3'-1"	27'-8"	104	56	106.608	3.353	408.729	28'- 2"	6	27'-10"	2	18	3.450	227.565	3.418	167.223	L
8	10	5	9"	6'-2"	0'-11"	3'-10"	1'- 3"	0'-10⅛"	26'-7"	3'-1"	27'-11"	104	72	112.256	3.661	471.397	28'- 2"	6	27'-10"	2	22	3.660	241.371	3.604	167.223	P
9	4	5	8"	6'-8"	1'- ½"	4'-3"	1'- 5⅛"	0'-11⅝"	29'-4"	3'-5"	30'-10"	116	24	105.332	3.510	414.630	31'- 2"	6	30'-10"	2	10	3.178	217.979	3.206	185.247	E
9	6	5	9"	6'-8"	1'- ½"	4'-3"	1'- 5⅛"	0'-11⅝"	29'-4"	3'-5"	30'-10"	116	40	110.980	3.709	398.624	31'- 2"	6	30'-10"	2	14	3.389	231.784	3.392	185.247	I
9	8	5	8"	6'-8"	1'- ½"	4'-3"	1'- 5⅛"	0'-11⅝"	29'-4"	3'-5"	30'-10"	116	56	116.628	3.900	480.975	31'- 2"	6	30'-10"	2	18	3.599	245.589	3.577	185.247	M
9	10	5	8"	6'-9"	1'- ½"	4'-3"	1'- 5⅛"	0'-11⅝"	29'-6"	3'-5"	31'-0"	116	72	122.276	4.171	546.825	31'- 2"	6	30'-10"	2	22	3.809	259.395	3.763	185.247	Q
9	12	6	9"	6'-11"	1'- ¾"	4'-3"	1'- 5¼"	0'-11¾"	29'-10"	3'-5"	31'-5"	116	88	127.924	4.597	702.070	31'- 2"	6	30'-10"	2	26	3.979	273.200	3.907	185.247	U
10	4	6	9"	7'-4"	1'- 2¼"	4'-8"	1'- 7⅜"	1'- 1¼"	32'-3"	3'-9"	34'-1"	128	24	115.352	4.159	539.178	34'- 2"	6	33'-10"	2	10	3.261	236.003	3.299	203.271	E
10	6	6	9"	7'-4"	1'- 2¼"	4'-8"	1'- 7⅜"	1'- 1¼"	32'-3"	3'-9"	34'-1"	128	40	121.000	4.355	557.259	34'- 2"	6	33'-10"	2	14	3.471	249.808	3.484	203.271	I
10	8	6	9"	7'-4"	1'- 2¼"	4'-8"	1'- 7⅜"	1'- 1¼"	32'-3"	3'-9"	34'-1"	128	56	126.648	4.549	604.709	34'- 2"	6	33'-10"	2	18	3.681	263.613	3.670	203.271	M
10	10	6	9"	7'-5"	1'- 2½"	4'-8"	1'- 7¾"	1'- 1½"	32'-6"	3'-9"	34'-3"	128	72	132.296	4.872	673.407	34'- 2"	6	33'-10"	2	22	3.871	277.419	3.835	203.271	Q
10	12	6	9"	7'-7"	1'- 2½"	4'-8"	1'- 7¾"	1'- 1½"	32'-9"	3'-9"	34'-7"	128	88	137.944	5.262	748.499	34'- 2"	6	33'-10"	2	26	4.036	291.224	3.974	203.271	U
12	6	6	8"	8'-9"	1'- 5½"	5'-5"	2'- 0"	1'- 4½"	38'-3"	4'-6"	40'-6"	152	40	141.040	5.794	714.963	40'- 2"	6	39'-10"	2	14	3.583	285.856	3.616	239.319	J
12	8	6	8"	8'-9"	1'- 5½"	5'-5"	2'- 0"	1'- 4½"	38'-3"	4'-6"	40'-6"	152	56	146.688	5.988	768.946	40'- 2"	6	39'-10"	2	18	3.793	299.661	3.801	239.319	N
12	10	6	8"	8'-9"	1'- 5½"	5'-5"	2'- 0"	1'- 4½"	38'-4"	4'-6"	40'-7"	152	72	152.336	6.222	839.825	40'- 2"	6	39'-10"	2	22	4.003	313.467	3.987	239.319	R
12	12	6	8"	8'-11"	1'- 5 ¾"	5'-5"	2'- ⅜"	1'- 4¾"	38'-9"	4'-5"	41'-1"	152	88	157.984	6.722	893.420	40'- 2"	6	39'-10"	2	26	4.141	327.272	4.099	239.319	V

A COPY OF THE ORIGINAL SEALED AND SIGNED DRAWING IS ON FILE IN THE CENTRAL OFFICE.

SPECIFICATION REFERENCE

TRIPLE BOX CULVERTS

20 TO 30 FT. FILLS

VIRGINIA DEPARTMENT OF TRANSPORTATION

VDOT

ROAD AND BRIDGE STANDARDS

REVISION DATE 07/11

SHEET 2 OF 2

1004.14

BCT-40

FOR TYPICAL SECTION, NOTES AND OTHER DETAILS, REFER TO STANDARD BCT-DT.

DIMENSIONS						REINFORCING STEEL																										
SPAN	HGHT	T1	T2	T3	T4							BH1			BH2			BH3				BH4					BV1			BV2		
(FT.)	(FT.)	TOP SLAB	BOTTOM SLAB	EXTERIOR WALL (IN.)	INTERIOR WALL (IN.)	A	B	C	D	E	F	SIZE	SPACING c-c	LENGTH	SIZE	SPACING c-c	LENGTH	SIZE	SPACING c-c	a	LENGTH	SIZE	SPACING c-c	a	b	LENGTH	SIZE	SPACING c-c	LENGTH	SIZE	SPACING c-c	LENGTH
3	3	8"	8"	8"	8"	9	9'- 0"	9	9'- 0"	1	1'- 0"	4	12"	10'-3"	4	12"	11'-4"	4	12"	2'- 2"	4'-0"	4	12"	2'-4"	2'-8"	4'-9"	4	12"	4'-0"	4	12"	4'-0"
3	4	8"	8"	8"	8"	9	9'- 0"	9	9'- 0"	2	2'- 0"	4	12"	10'-3"	4	12"	11'-4"	3	12"	2'- 4"	4'-5"	4	12"	2'-4"	3'-2"	5'-3"	4	12"	5'-0"	4	12"	5'-0"
4	3	9¾"	9¾"	8"	8"	12	12'- 0"	12	12'- 0"	1	1'- 0"	4	12"	13'-3"	4	12"	14'-4"	--	---	----	----	4	12"	2'-4"	2'-10"	4'-11"	4	12"	4'-3"	4	12"	4'-3"
4	4	9¾"	9¾"	8"	8"	12	12'- 0"	12	12'- 0"	2	2'- 0"	4	12"	13'-3"	4	12"	14'-4"	--	---	----	----	4	12"	2'-4"	3'-4"	5'-5"	4	12"	5'-3"	4	12"	5'-3"
4	5	9¾"	9¾"	8"	8"	12	12'- 0"	12	12'- 0"	3	3'- 0"	4	12"	13'-3"	4	12"	14'-4"	--	---	----	----	4	12"	2'-4"	3'-10"	5'-11"	4	12"	6'-3"	4	12"	6'-3"
4	6	9¾"	9¾"	8"	8"	12	12'- 0"	12	12'- 0"	4	4'- 0"	4	12"	13'-3"	4	12"	14'-4"	4	12"	2'-11"	5'-6"	4	12"	2'-4"	4'-4"	6'-5"	5	12"	7'-3"	4	12"	7'-3"
5	3	12"	12"	8"	8"	15	15'- 0"	15	15'- 0"	1	1'- 0"	4	11"	16'-4"	4	11"	17'-3"	--	---	----	----	4	11"	2'-4"	3'-0"	5'-1"	4	12"	4'-8"	4	12"	4'-8"
5	4	12"	12"	8"	8"	15	15'- 0"	15	15'- 0"	2	2'- 0"	4	11"	16'-4"	4	11"	17'-3"	--	---	----	----	4	11"	2'-4"	3'-6"	5'-7"	4	12"	5'-8"	4	12"	5'-8"
5	5	11¾"	11¾"	8"	8"	15	15'- 0"	15	15'- 0"	3	3'- 0"	4	10"	16'-4"	4	10"	17'-3"	--	---	----	----	4	10"	2'-4"	4'-0"	6'-1"	4	12"	6'-7"	4	12"	6'-7"
5	6	11¾"	11¾"	8"	8"	15	15'- 0"	15	15'- 0"	4	4'- 0"	4	10"	16'-4"	4	10"	17'-3"	--	---	----	----	4	10"	2'-4"	4'-6"	6'-7"	5	12"	7'-7"	4	12"	7'-7"
5	7	11¾"	11¾"	8"	8"	15	15'- 0"	15	15'- 0"	5	5'- 0"	4	10"	16'-0"	4	10"	17'-3"	--	---	----	----	5	10"	2'-6"	5'-2"	7'-3"	5	8½"	8'-7"	4	12"	8'-7"
6	4	14"	14"	8"	8"	18	18'- 0"	18	18'- 0"	2	2'- 0"	4	9"	19'-4"	4	9"	20'-3"	--	---	----	----	4	9"	2'-4"	3'-8"	5'-9"	4	12"	6'-0"	4	12"	6'-0"
6	5	14"	14"	8"	8"	18	18'- 0"	18	18'- 0"	3	3'- 0"	4	10"	19'-4"	5	10"	20'-3"	--	---	----	----	4	10"	2'-4"	4'-2"	6'-3"	4	12"	7'-0"	4	12"	7'-0"
6	6	14"	14"	8"	8"	18	18'- 0"	18	18'- 0"	4	4'- 0"	4	10"	19'-4"	5	10"	20'-3"	--	---	----	----	4	10"	2'-4"	4'-8"	6'-9"	5	12"	8'-0"	4	12"	8'-0"
6	7	13¾"	13¾"	8"	8"	18	18'- 0"	18	18'- 0"	5	5'- 0"	4	10"	19'-4"	5	10"	20'-3"	3	10"	3'-5"	6'-7"	4	10"	2'-4"	5'-2"	7'-3"	5	9"	8'-11"	4	12"	8'-11"
6	8	14"	14"	8½"	8"	18	18'- 0"	18	18'- 0"	6	6'- 0"	4	9"	19'-1"	4	9"	20'-5"	--	---	----	----	5	9"	2'-6"	5'-10"	8'-0"	6	9½"	10'-0"	4	12"	10'-0"
7	4	16"	16"	8"	8"	21	21'- 0"	21	21'- 0"	2	2'- 0"	5	9"	22'-4"	5	9"	23'-3"	--	---	----	----	4	9"	2'-9"	3'-10"	6'-4"	4	12"	6'-4"	4	12"	6'-4"
7	6	15¾"	15¾"	8"	8"	21	21'- 0"	21	21'- 0"	4	4'- 0"	5	9"	22'-4"	5	9"	23'-3"	--	---	----	----	4	9"	2'-9"	4'-10"	7'-4"	5	12"	8'-3"	4	12"	8'-3"
7	8	15¾"	15¾"	8"	8"	21	21'- 0"	21	21'- 0"	6	6'- 0"	5	9"	22'-4"	5	9"	23'-3"	4	9"	3'-9"	7'-3"	4	9"	2'-9"	5'-10"	8'-4"	5	6"	10'-3"	4	12"	10'-3"
7	10	15¾"	15¾"	10½"	8"	21	21'- 0"	21	21'- 0"	8	8'- 0"	5	9"	22'-5"	5	9"	23'-9"	3	9"	4'-2"	8'-2"	5	9"	2'-11"	7'-0"	9'-6"	6	6½"	12'-3"	4	12"	12'-3"
8	4	18½"	18½"	8"	8"	24	24'- 0"	24	24'- 0"	2	2'- 0"	5	8"	25'-4"	5	8"	26'-3"	--	---	----	----	4	8"	2'-9"	4'-1"	6'-6"	4	12"	6'-9"	4	10½"	6'-9"
8	6	18"	18"	8"	8"	24	24'- 0"	24	24'- 0"	4	4'- 0"	5	8"	25'-4"	5	8"	26'-3"	--	---	----	----	4	8"	2'-9"	5'-0"	7'-6"	5	12"	8'-7"	4	10½"	8'-7"
8	8	18"	18"	8"	8"	24	24'- 0"	24	24'- 0"	6	6'- 0"	5	8"	25'-4"	5	8"	26'-3"	3	8"	4'-0"	7'-9"	4	8"	2'-9"	6'-0"	8'-6"	5	6"	10'-7"	4	10½"	10'-7"
8	10	18"	18"	10½"	8"	24	24'- 0"	24	24'- 0"	8	8'- 0"	5	8"	25'-5"	5	8"	26'-9"	3	8"	4'-4"	8'-6"	5	8"	2'-11"	7'-2"	9'-9"	6	9"	12'-7"	4	10½"	12'-7"
9	4	20"	20"	8"	8"	27	27'- 0"	27	27'- 0"	2	2'- 0"	6	9"	28'-4"	6	9"	29'-3"	--	---	----	----	4	9"	3'-2"	4'-2"	7'-1"	4	12"	7'-0"	4	10"	7'-0"
9	6	20"	20"	8"	8"	27	27'- 0"	27	27'- 0"	4	4'- 0"	6	9"	28'-4"	6	9"	29'-3"	--	---	----	----	4	9"	3'-2"	5'-2"	8'-1"	5	12"	9'-0"	4	10"	9'-0"
9	8	19¾"	19¾"	8"	8"	27	27'- 0"	27	27'- 0"	6	6'- 0"	6	9"	28'-0"	6	9"	29'-3"	--	---	----	----	5	9"	3'-4"	6'-4"	9'-3"	5	6"	10'-11"	4	10"	10'-11"
9	10	20"	20"	10½"	8"	27	27'- 0"	27	27'- 0"	8	8'- 0"	6	9"	28'-2"	6	9"	29'-9"	--	---	----	----	6	9"	3'-5"	7'-6"	10'-6"	6	9"	13'-0"	4	10"	13'-0"
9	12	19¾"	19¾"	12½"	8"	27	27'- 0"	27	27'- 0"	10	10'- 0"	6	9"	28'-3"	6	9"	30'-0"	--	---	----	----	7	9"	3'-7"	8'-9"	11'-10"	6	5½"	14'-11"	4	10"	14'-11"
10	4	22"	22"	8"	8"	30	30'- 0"	30	30'- 0"	2	2'- 0"	6	9"	31'-3"	6	9"	32'-3"	--	---	----	----	4	9"	3'-2"	4'-5"	7'-3"	4	12"	7'-4"	4	10"	7'-4"
10	6	22"	22"	8"	8"	30	30'- 0"	30	30'- 0"	4	4'- 0"	6	9"	31'-3"	6	9"	32'-3"	--	---	----	----	4	9"	3'-2"	5'-5"	8'-3"	5	12"	9'-3"	4	10"	9'-3"
10	8	22"	22"	8"	8"	30	30'- 0"	30	30'- 0"	6	6'- 0"	6	9"	31'-0"	6	9"	32'-3"	--	---	----	----	5	9"	3'-4"	6'-6"	9'-6"	5	6"	11'-3"	4	10"	11'-3"
10	10	22"	22"	10"	8"	30	30'- 0"	30	30'- 0"	8	8'- 0"	7	9"	31'-1"	6	9"	32'-7"	--	---	----	----	6	9"	4'-1"	7'-8"	11'-4"	4	4"	13'-3"	4	10"	13'-3"
10	12	22¼"	22¼"	12½"	8"	30	30'- 0"	30	30'- 0"	10	10'- 0"	6	9"	31'-6"	6	9"	33'-0"	3	9"	5'-2"	10'-0"	6	9"	3'-5"	8'-9"	11'-9"	6	7½"	15'-4"	4	10"	15'-4"
12	6	26½"	26½"	8"	8"	36	36'- 0"	36	36'- 0"	4	4'- 0"	6	8"	37'-3"	6	8"	38'-4"	--	---	----	----	4	8"	3'-2"	5'-9"	8'-7"	5	12"	10'-1"	4	9½"	10'-1"
12	8	26½"	26½"	8"	8"	36	36'- 0"	36	36'- 0"	6	6'- 0"	6	8"	37'-3"	6	8"	38'-4"	3	8"	4'-8"	9'-2"	4	8"	3'-2"	6'-9"	9'-7"	6	9"	12'-1"	4	9½"	12'-1"
12	10	26½"	26½"	9"	8"	36	36'- 0"	36	36'- 0"	8	8'- 0"	6	8"	37'-2"	6	8"	38'-6"	3	8"	5'-1"	9'-11"	5	8"	3'-4"	7'-11"	10'-10"	8	11½"	14'-1"	4	9½"	14'-1"
12	12	26½"	26½"	12"	8"	36	36'- 0"	36	36'- 0"	10	10'- 0"	6	8"	37'-8"	6	8"	39'-0"	4	8"	5'-6"	10'-8"	5	8"	3'-4"	8'-11"	11'-10"	7	10"	16'-1"	4	9"	16'-1"

A COPY OF THE ORIGINAL SEALED AND SIGNED DRAWING IS ON FILE IN THE CENTRAL OFFICE

VDOT
ROAD AND BRIDGE STANDARDS

SHEET 1 OF 2 | REVISION DATE
1004.15 | 07/11

TRIPLE BOX CULVERTS

30 TO 40 FT. FILLS

VIRGINIA DEPARTMENT OF TRANSPORTATION

SPECIFICATION REFERENCE

FOR TYPICAL SECTION, NOTES AND OTHER DETAILS, REFER TO STANDARD BCT-DT.

BCT-40

SPAN	HGHT	REINFORCING STEEL BT1												REINFORCING STEEL (LBS/LONG. JT)	QUAN./LF		HEADWALLS								WINGWALL
																	G	HW1							
(FT.)	(FT.)	SIZE	SPACING c-c	a	b	c	d	e	f	g	LENGTH	NO. BL1 #4 BARS	NO. BL2 #3 BARS		CONCRETE CLASS A4 (CY/LF)	REINFORCING STEEL (LBS/LF)	HEADWALL LENGTH	SIZE	LENGTH	NO. HW2 BARS	NO. HW3 BARS	INLET CONCRETE CL. A4 (CY)	INLET REINFORCING STEEL (LBS)	OUTLET CONCRETE CL. A4 (CY)	OUTLET REINFORCING STEEL (LBS)	
3	3	4	12"	2'-7"	0'- 4"	1'-10"	0'- 5 1/8"	0'- 3 1/4"	11'-3"	1'-3"	11'-9"	44	16	42.388	0.988	119.117	13'- 2"	6	12'-10"	2	8	1.827	102.932	1.808	77.103	A
3	4	4	12"	2'-7"	0'- 4"	1'-10"	0'- 5 1/8"	0'- 3 1/4"	11'-3"	1'-3"	11'-9"	44	24	45.212	1.087	123.575	13'- 2"	6	12'-10"	2	10	1.932	109.835	1.901	77.103	C
4	3	4	12"	3'-3"	0'- 5 3/4"	2'-3"	0'- 7 5/8"	0'- 5"	14'-3"	1'-6"	15'-0"	56	16	52.408	1.294	130.522	16'- 2"	6	15'-10"	2	8	2.104	120.956	2.095	95.127	B
4	4	4	12"	3'-3"	0'- 5 3/4"	2'-3"	0'- 7 5/8"	0'- 5"	14'-3"	1'-6"	15'-0"	56	24	55.232	1.392	138.874	16'- 2"	6	15'-10"	2	10	2.209	127.859	2.188	95.127	D
4	5	4	12"	3'-3"	0'- 5 3/4"	2'-3"	0'- 7 5/8"	0'- 5"	14'-3"	1'-6"	15'-0"	56	32	58.056	1.490	147.226	16'- 2"	6	15'-10"	2	12	2.315	134.761	2.280	95.127	F
4	6	4	12"	3'-3"	0'- 5 3/4"	2'-3"	0'- 7 5/8"	0'- 5"	14'-3"	1'-6"	15'-0"	56	40	60.880	1.587	175.546	16'- 2"	6	15'-10"	2	14	2.420	141.664	2.373	95.127	H
5	3	4	11"	3'-10"	0'- 8"	2'-8"	0'- 10 7/8"	0'- 7 1/4"	17'-4"	1'-9"	18'-3"	68	16	62.428	1.718	160.509	19'- 2"	6	18'-10"	2	8	2.313	138.980	2.313	113.151	B
5	4	4	11"	3'-10"	0'- 8"	2'-8"	0'- 10 7/8"	0'- 7 1/4"	17'-4"	1'-9"	18'-3"	68	24	65.252	1.816	168.982	19'- 2"	6	18'-10"	2	10	2.418	145.883	2.406	113.151	D
5	5	4	10"	3'-10"	0'- 7 3/4"	2'-8"	0'- 10 1/2"	0'- 7"	17'-4"	1'-9"	18'-3"	68	32	68.076	1.886	186.495	19'- 2"	6	18'-10"	2	12	2.532	152.785	2.508	113.151	F
5	6	4	10"	3'-10"	0'- 7 3/4"	2'-8"	0'- 10 1/2"	0'- 7"	17'-4"	1'-9"	18'-3"	68	40	70.900	1.984	200.833	19'- 2"	6	18'-10"	2	14	2.637	159.688	2.600	113.151	H
5	7	4	10"	3'-10"	0'- 7 3/4"	2'-8"	0'- 10 1/2"	0'- 7"	17'-4"	1'-9"	18'-3"	68	48	73.724	2.080	230.967	19'- 2"	6	18'-10"	2	16	2.742	166.591	2.693	113.151	J
6	4	4	9"	4'-6"	0'-10"	3'-0"	1'- 1 5/8"	0'- 9 1/4"	20'-4"	2'-1"	21'-7"	80	24	75.272	2.289	215.855	22'- 2"	6	21'-10"	2	10	2.607	163.907	2.605	131.175	D
6	5	4	10"	4'-6"	0'-10"	3'-0"	1'- 1 5/8"	0'- 9 1/4"	20'-4"	2'-1"	21'-7"	80	32	78.096	2.387	229.840	22'- 2"	6	21'-10"	2	12	2.712	170.809	2.698	131.175	F
6	6	4	10"	4'-6"	0'-10"	3'-0"	1'- 1 5/8"	0'- 9 1/4"	20'-4"	2'-1"	21'-7"	80	40	80.920	2.485	244.460	22'- 2"	6	21'-10"	2	14	2.817	177.712	2.791	131.175	H
6	7	4	10"	4'-6"	0'-9 3/4 "	3'-0"	1'- 1 1/4"	0'- 9"	20'-4"	2'-1"	21'-6"	80	48	83.744	2.550	271.576	22'- 2"	6	21'-10"	2	16	2.922	184.615	2.883	131.175	J
6	8	4	9"	4'-7"	0'-10"	3'-0"	1'- 1 5/8"	0'- 9 1/4"	20'-5"	2'-1"	21'-8"	80	56	86.568	2.711	292.291	22'- 2"	6	21'-10"	2	18	3.039	191.517	2.987	131.175	L
7	4	5	9"	5'-2"	1'- 0"	3'-5"	1'- 4 3/8"	0'-11 1/8"	23'-4"	2'-4"	24'-10"	92	24	85.292	2.833	314.260	25'- 2"	6	24'-10"	2	10	2.769	181.931	2.777	149.199	E
7	6	5	9"	5'-2"	0'-11 3/4"	3'-5"	1'- 4"	0'-10 7/8"	23'-4"	2'-5"	24'-9"	92	40	90.940	2.993	337.736	25'- 2"	6	24'-10"	2	14	2.979	195.736	2.962	149.199	I
7	8	5	9"	5'-2"	0'-11 3/4"	3'-5"	1'- 4"	0'-10 7/8"	23'-4"	2'-5"	24'-9"	92	56	96.588	3.185	404.045	25'- 2"	6	24'-10"	2	18	3.189	209.541	3.148	149.199	M
7	10	5	9"	5'-5"	0'-11 3/4"	3'-5"	1'- 4"	0'-10 7/8"	23'-9"	2'-5"	25'-2"	92	72	102.236	3.573	457.227	25'- 2"	6	24'-10"	2	22	3.361	223.347	3.294	149.199	Q
8	4	5	8"	5'-9"	1'- 2 1/2"	3'-10"	1'- 7 7/8"	1'- 1 5/8"	26'-4"	2'-6"	28'-2"	104	24	95.312	3.536	383.895	28'- 2"	6	27'-10"	2	10	2.875	199.955	2.893	167.223	E
8	6	5	8"	5'-9"	1'- 2"	3'-10"	1'- 7 1/8"	1'- 1 1/8"	26'-4"	2'-7"	28'-1"	104	40	100.960	3.649	408.450	28'- 2"	6	27'-10"	2	14	3.085	213.760	3.079	167.223	I
8	8	5	8"	5'-9"	1'- 2"	3'-10"	1'- 7 1/8"	1'- 1 1/8"	26'-4"	2'-7"	28'-1"	104	56	106.608	3.842	468.303	28'- 2"	6	27'-10"	2	18	3.280	227.565	3.248	167.223	M
8	10	5	8"	6'-0"	1'- 2"	3'-10"	1'- 7 1/8"	1'- 1 1/8"	26'-9"	2'-7"	28'-6"	104	72	112.256	4.236	518.258	28'- 2"	6	27'-10"	2	22	3.451	241.371	3.394	167.223	Q
9	4	6	9"	6'-5"	1'- 4"	4'-3"	1'- 9 7/8"	1'- 3"	29'-4"	2'-11"	31'-4"	116	24	105.332	4.144	499.880	31'- 2"	6	30'-10"	2	10	2.944	217.979	2.972	185.247	E
9	6	6	9"	6'-5"	1'- 4"	4'-3"	1'- 9 7/8"	1'- 3"	29'-4"	2'-11"	31'-4"	116	40	110.980	4.340	525.293	31'- 2"	6	30'-10"	2	14	3.155	231.784	3.158	185.247	I
9	8	6	9"	6'-5"	1'- 3 3/4"	4'-3"	1'- 9 1/2"	1'- 2 3/4"	29'-4"	2'-11"	31'-4"	116	56	116.628	4.487	586.121	31'- 2"	6	30'-10"	2	18	3.365	245.589	3.343	185.247	M
9	10	6	9"	6'-8"	1'- 4"	4'-3"	1'- 9 7/8"	1'- 3"	29'-9"	2'-11"	31'-9"	116	72	122.276	4.932	641.784	31'- 2"	6	30'-10"	2	22	3.553	259.395	3.506	185.247	Q
9	12	6	9"	6'-10"	1'- 3 3/4"	4'-3"	1'- 9 1/2"	1'- 2 3/4"	30'-1"	2'-11"	32'-1"	116	88	127.924	5.294	747.331	31'- 2"	6	30'-10"	2	26	3.598	273.200	3.525	185.247	U
10	4	6	9"	7'-1"	1'- 6"	4'-8"	2'- 3/4"	1'- 5"	32'-3"	3'-2"	34'-7"	128	24	115.352	4.914	547.156	34'- 2"	6	33'-10"	2	10	2.975	236.003	3.013	203.271	F
10	6	6	9"	7'-1"	1'- 6"	4'-8"	2'- 3/4"	1'- 5"	32'-3"	3'-2"	34'-7"	128	40	121.000	5.110	572.819	34'- 2"	6	33'-10"	2	14	3.185	249.808	3.198	203.271	J
10	8	6	9"	7'-1"	1'- 6"	4'-8"	2'- 3/4"	1'- 5"	32'-3"	3'-2"	34'-7"	128	56	126.648	5.302	635.237	34'- 2"	6	33'-10"	2	18	3.395	263.613	3.384	203.271	N
10	10	7	9"	7'-3"	1'- 6"	4'-8"	2'- 5/8"	1'- 4 3/4"	32'-7"	3'-2"	34'-11"	128	72	132.296	5.657	790.481	34'- 2"	6	33'-10"	2	22	3.564	277.419	3.527	203.271	R
10	12	6	9"	7'-5"	1'- 6 1/4"	4'-8"	2'- 1 1/8"	1'- 5 1/4"	33'-0"	3'-1"	35'-5"	128	88	137.944	6.175	756.073	34'- 2"	6	33'-10"	2	26	3.603	291.224	3.540	203.271	V
12	6	6	8"	8'-4"	1'-10 1/2"	5'-5"	2'- 7 1/8"	1'- 9 1/2"	38'-3"	3'-8"	41'-3"	152	40	141.040	6.986	732.789	40'- 2"	6	39'-10"	2	14	3.184	285.856	3.217	239.319	J
12	8	6	8"	8'-4"	1'-10 1/2"	5'-5"	2'- 7 1/8"	1'- 9 1/2"	38'-3"	3'-8"	41'-3"	152	56	146.688	7.179	797.422	40'- 2"	6	39'-10"	2	18	3.394	299.661	3.402	239.319	N
12	10	6	8"	8'-5"	1'-10 1/2"	5'-5"	2'- 7 1/8"	1'- 9 1/2"	38'-6"	3'-8"	41'-5"	152	72	152.336	7.460	872.364	40'- 2"	6	39'-10"	2	22	3.535	313.467	3.518	239.319	R
12	12	6	8"	8'-8"	1'-10 1/2"	5'-5"	2'- 7 1/8"	1'- 9 1/2"	39'-0"	3'-8"	41'-11"	152	88	157.984	7.970	921.845	40'- 2"	6	39'-10"	2	26	3.590	327.272	3.547	239.319	V

A COPY OF THE ORIGINAL SEALED AND SIGNED DRAWING IS ON FILE IN THE CENTRAL OFFICE.

SPECIFICATION REFERENCE

TRIPLE BOX CULVERTS

30 TO 40 FT. FILLS

VIRGINIA DEPARTMENT OF TRANSPORTATION

VDOT

ROAD AND BRIDGE STANDARDS

REVISION DATE 08/14

SHEET 2 OF 2

1004.16

BCT-50

FOR TYPICAL SECTION, NOTES AND OTHER DETAILS, REFER TO STANDARD BCT-DT.

DIMENSIONS						REINFORCING STEEL																										
SPAN	HGHT	T1	T2	T3	T4							BH1			BH2			BH3				BH4					BV1			BV2		
(FT.)	(FT.)	TOP SLAB	BOTTOM SLAB	EXTERIOR WALL (IN.)	INTERIOR WALL (IN.)	A	B	C	D	E	F	SIZE	SPACING c-c	LENGTH	SIZE	SPACING c-c	LENGTH	SIZE	SPACING c-c	a	LENGTH	SIZE	SPACING c-c	a	b	LENGTH	SIZE	SPACING c-c	LENGTH	SIZE	SPACING c-c	LENGTH
3	3	9"	9"	8"	8"	9	9'- 0"	9	9'- 0"	1	1'- 0"	4	12"	10'-3"	4	12"	11'-4"	--	---	----	----	4	12"	2'-4"	2'-9"	4'-10"	4	12"	4'-2"	4	12"	4'-2"
3	4	9"	9"	8"	8"	9	9'- 0"	9	9'- 0"	2	2'- 0"	4	12"	10'-3"	4	12"	11'-4"	--	---	----	----	4	12"	2'-4"	3'-3"	5'-4"	4	12"	5'-2"	4	12"	5'-2"
4	3	11"	11"	8"	8"	12	12'- 0"	12	12'- 0"	1	1'- 0"	4	12"	13'-3"	4	12"	14'-4"	--	---	----	----	4	12"	2'-4"	2'-11"	5'-0"	4	12"	4'-6"	4	12"	4'-6"
4	4	11¼"	11¼"	8"	8"	12	12'- 0"	12	12'- 0"	2	2'- 0"	4	12"	13'-3"	4	12"	14'-4"	--	---	----	----	4	12"	2'-4"	3'-6"	5'-6"	4	12"	5'-6"	4	12"	5'-6"
4	5	11"	11"	8"	8"	12	12'- 0"	12	12'- 0"	3	3'- 0"	4	12"	13'-3"	4	12"	14'-4"	--	---	----	----	4	12"	2'-4"	3'-11"	6'-0"	5	12"	6'-6"	4	12"	6'-6"
4	6	11¼"	11¼"	8"	8"	12	12'- 0"	12	12'- 0"	4	4'- 0"	4	12"	13'-3"	4	12"	14'-4"	4	12"	3'-0"	5'-9"	4	12"	2'-4"	4'-6"	6'-6"	5	9"	7'-6"	4	12"	7'-6"
5	3	13½"	13½"	8"	8"	15	15'- 0"	15	15'- 0"	1	1'- 0"	4	9"	16'-4"	4	9"	17'-3"	--	---	----	----	4	9"	2'-4"	3'-2"	5'-2"	4	12"	4'-11"	4	12"	4'-11"
5	4	13½"	13½"	8"	8"	15	15'- 0"	15	15'- 0"	2	2'- 0"	4	9"	16'-4"	4	9"	17'-3"	--	---	----	----	4	9"	2'-4"	3'-8"	5'-8"	4	12"	5'-11"	4	12"	5'-11"
5	5	13½"	13½"	8"	8"	15	15'- 0"	15	15'- 0"	3	3'- 0"	4	9"	16'-4"	4	9"	17'-3"	--	---	----	----	4	9"	2'-4"	4'-2"	6'-2"	5	12"	6'-11"	4	12"	6'-11"
5	6	13½"	13½"	8"	8"	15	15'- 0"	15	15'- 0"	4	4'- 0"	4	9"	16'-4"	4	9"	17'-3"	--	---	----	----	4	9"	2'-4"	4'-8"	6'-8"	5	9½"	7'-11"	4	12"	7'-11"
5	7	13½"	13½"	8½"	8"	15	15'- 0"	15	15'- 0"	5	5'- 0"	4	10"	16'-1"	4	10"	17'-5"	--	---	----	----	5	10"	2'-6"	5'-4"	7'-5"	6	10½"	8'-11"	4	12"	8'-11"
6	4	16½"	16½"	8"	8"	18	18'- 0"	18	18'- 0"	2	2'- 0"	4	9"	19'-4"	5	9"	20'-3"	--	---	----	----	4	9"	2'-4"	3'-11"	5'-11"	4	12"	6'-5"	4	11"	6'-5"
6	5	16"	16"	8"	8"	18	18'- 0"	18	18'- 0"	3	3'- 0"	4	9"	19'-4"	5	9"	20'-3"	--	---	----	----	4	9"	2'-4"	4'-4"	6'-5"	5	12"	7'-4"	4	11"	7'-4"
6	6	16"	16"	8"	8"	18	18'- 0"	18	18'- 0"	4	4'- 0"	4	9"	19'-4"	5	9"	20'-3"	--	---	----	----	4	9"	2'-4"	4'-10"	6'-11"	5	10"	8'-3"	4	11½"	8'-3"
6	7	16"	16"	8"	8"	18	18'- 0"	18	18'- 0"	5	5'- 0"	4	9"	19'-4"	5	9"	20'-3"	3	9"	3'-7"	7'-0"	4	9"	2'-4"	5'-4"	7'-5"	6	10½"	9'-3"	4	11½"	9'-3"
6	8	16"	16"	9½"	8"	18	18'- 0"	18	18'- 0"	6	6'- 0"	4	9"	19'-3"	5	9"	20'-6"	--	---	----	----	5	9"	2'-6"	6'-0"	8'-2"	5	5"	10'-3"	4	11½"	10'-3"
7	4	18½"	18½"	8"	8"	21	21'- 0"	21	21'- 0"	2	2'- 0"	5	9"	22'-4"	5	9"	23'-3"	--	---	----	----	4	9"	2'-9"	4'-1"	6'-6"	4	12"	6'-9"	4	10"	6'-9"
7	6	18½"	18½"	8"	8"	21	21'- 0"	21	21'- 0"	4	4'- 0"	5	9"	22'-4"	5	9"	23'-3"	--	---	----	----	4	9"	2'-9"	5'-1"	7'-6"	5	9½"	8'-9"	4	10"	8'-9"
7	8	18"	18"	9½"	8"	21	21'- 0"	21	21'- 0"	6	6'- 0"	5	9"	22'-3"	5	9"	23'-6"	--	---	----	----	5	9"	2'-11"	6'-2"	8'-9"	5	7½"	10'-7"	4	10"	10'-7"
7	10	18"	18"	11½"	8"	21	21'- 0"	21	21'- 0"	8	8'- 0"	5	9"	22'-7"	5	9"	23'-11"	4	9"	4'-4"	8'-5"	5	9"	2'-11"	7'-2"	9'-9"	7	9"	12'-7"	4	10"	12'-7"
8	4	21"	21"	8"	8"	24	24'- 0"	24	24'- 0"	2	2'- 0"	6	9"	25'-4"	6	9"	26'-3"	--	---	----	----	4	9"	3'-2"	4'-3"	7'-2"	4	12"	7'-2"	4	10"	7'-2"
8	6	21"	21"	8"	8"	24	24'- 0"	24	24'- 0"	4	4'- 0"	5	8"	25'-4"	5	8"	26'-3"	--	---	----	----	4	8"	2'-9"	5'-3"	7'-9"	5	9"	9'-1"	4	10"	9'-1"
8	8	20½"	20½"	8½"	8"	24	24'- 0"	24	24'- 0"	6	6'- 0"	5	8"	25'-5"	5	8"	26'-5"	3	8"	4'-2"	8'-2"	4	8"	2'-9"	6'-3"	8'-8"	6	7½"	11'-0"	4	10"	11'-0"
8	10	20½"	20½"	11½"	8"	24	24'- 0"	24	24'- 0"	8	8'- 0"	5	8"	25'-7"	5	8"	26'-11"	3	8"	4'-7"	8'-11"	5	8"	2'-11"	7'-5"	9'-11"	7	9"	13'-0"	4	10"	13'-0"
9	4	23"	23"	8"	8"	27	27'- 0"	27	27'- 0"	2	2'- 0"	6	9"	28'-4"	6	9"	29'-3"	--	---	----	----	4	9"	3'-2"	4'-5"	7'-4"	4	12"	7'-6"	4	10"	7'-6"
9	6	23"	23"	8"	8"	27	27'- 0"	27	27'- 0"	4	4'- 0"	6	9"	28'-4"	6	9"	29'-3"	--	---	----	----	4	9"	3'-2"	5'-5"	8'-4"	5	8½"	9'-6"	4	10"	9'-6"
9	8	23"	23"	8½"	8"	27	27'- 0"	27	27'- 0"	6	6'- 0"	6	9"	28'-1"	6	9"	29'-5"	--	---	----	----	5	9"	3'-4"	6'-8"	9'-7"	5	4½"	11'-6"	4	10"	11'-6"
9	10	23"	23"	11½"	8"	27	27'- 0"	27	27'- 0"	8	8'- 0"	6	9"	28'-4"	6	9"	29'-11"	--	---	----	----	6	9"	3'-5"	7'-9"	10'-9"	5	4"	13'-6"	4	10"	13'-6"
9	12	23"	23"	14"	8"	27	27'- 0"	27	27'- 0"	10	10'- 0"	6	9"	28'-6"	6	9"	30'-3"	3	9"	5'-2"	10'-2"	7	9"	3'-7"	9'-0"	12'-1"	6	7"	15'-6"	4	9½"	15'-6"
10	4	26"	26"	8"	8"	30	30'- 0"	30	30'- 0"	2	2'- 0"	6	9"	31'-3"	6	9"	32'-3"	--	---	----	----	4	9"	3'-2"	4'-8"	7'-7"	4	12"	8'-0"	4	9"	8'-0"
10	6	25½"	25½"	8"	8"	30	30'- 0"	30	30'- 0"	4	4'- 0"	6	9"	31'-3"	6	9"	32'-3"	--	---	----	----	4	9"	3'-2"	5'-8"	8'-6"	5	8"	9'-11"	4	9"	9'-11"
10	8	25½"	25½"	8"	8"	30	30'- 0"	30	30'- 0"	6	6'- 0"	6	9"	31'-3"	6	9"	32'-3"	3	9"	4'-7"	9'-0"	4	9"	3'-2"	6'-8"	9'-6"	5	4½"	11'-11"	4	9"	11'-11"
10	10	25½"	25½"	11"	8"	30	30'- 0"	30	30'- 0"	8	8'- 0"	6	9"	31'-6"	6	9"	32'-9"	3	9"	5'-0"	9'-9"	5	9"	3'-4"	7'-10"	10'-9"	6	6"	13'-11"	4	9"	13'-11"
10	12	25½"	25½"	14"	8"	30	30'- 0"	30	30'- 0"	10	10'- 0"	6	9"	31'-9"	6	9"	33'-3"	3	9"	5'-5"	10'-7"	6	9"	3'-5"	9'-0"	12'-0"	8	9½"	15'-11"	4	9"	15'-11"
12	6	30½"	30½"	8"	8"	36	36'- 0"	36	36'- 0"	4	4'- 0"	7	9"	37'-3"	7	9"	38'-4"	--	---	----	----	4	9"	3'-10"	6'-1"	9'-7"	5	7½"	10'-8"	4	12"	10'-8"
12	8	30½"	30½"	8"	8"	36	36'- 0"	36	36'- 0"	6	6'- 0"	7	9"	37'-3"	7	9"	38'-4"	3	9"	5'-0"	9'-10"	4	9"	3'-10"	7'-1"	10'-7"	7	9½"	12'-8"	4	12"	12'-8"
12	10	30½"	30½"	9¾"	8"	36	36'- 0"	36	36'- 0"	8	8'- 0"	7	8"	37'-4"	7	8"	38'-7"	3	8"	5'-5"	10'-7"	5	8"	4'-0"	8'-3"	11'-10"	7	8"	14'-8"	4	7½"	14'-8"
12	12	30½"	30½"	13"	8"	36	36'- 0"	36	36'- 0"	10	10'- 0"	7	8"	37'-7"	7	8"	39'-1"	3	8"	5'-10"	11'-5"	6	8"	4'-1"	9'-5"	13'-1"	8	9½"	16'-9"	4	7½"	16'-9"

A COPY OF THE ORIGINAL SEALED AND SIGNED DRAWING IS ON FILE IN THE CENTRAL OFFICE

VDOT
ROAD AND BRIDGE STANDARDS

SHEET 1 OF 2 | REVISION DATE
1004.17 | 07/11

TRIPLE BOX CULVERTS

40 TO 50 FT. FILLS

VIRGINIA DEPARTMENT OF TRANSPORTATION

SPECIFICATION REFERENCE

FOR TYPICAL SECTION, NOTES AND OTHER DETAILS, REFER TO STANDARD BCT-DT.

BCT-50

		REINFORCING STEEL													QUAN./LF		HEADWALLS									
SPAN	HGHT	BT1															G	HW1								
(FT.)	(FT.)	SIZE	SPACING c-c	a	b	c	d	e	f	g	LENGTH	NO. BL1 #4 BARS	NO. BL2 #3 BARS	REINFORCING STEEL (LBS/LONG. JT)	CONCRETE CLASS A4 (CY/LF)	REINFORCING STEEL (LBS/LF)	HEADWALL LENGTH	SIZE	LENGTH	NO. HW2 BARS	NO. HW3 BARS	INLET CONCRETE CL. A4 (CY)	INLET REINFORCING STEEL (LBS)	OUTLET CONCRETE CL. A4 (CY)	OUTLET REINFORCING STEEL (LBS)	WINGWALL
3	3	4	12"	2'-6"	0'- 5"	1'-10"	0'- 6⅝"	0'- 4¼"	11'-3"	1'-1"	11'-10"	44	16	42.388	1.061	109.676	13'- 2"	6	12'-10"	2	8	1.811	102.932	1.791	77.103	A
3	4	4	12"	2'-6"	0'- 5"	1'-10"	0'- 6⅝"	0'- 4¼"	11'-3"	1'-1"	11'-10"	44	24	45.212	1.159	118.028	13'- 2"	6	12'-10"	2	10	1.916	109.835	1.884	77.103	C
4	3	4	12"	3'-2"	0'- 7"	2'-3"	0'- 9⅜"	0'- 6¼"	14'-3"	1'-4"	15'-2"	56	16	52.408	1.407	131.864	16'- 2"	6	15'-10"	2	8	2.072	120.956	2.063	95.127	B
4	4	4	12"	3'-1"	0'- 7¼"	2'-3"	0'- 9¾"	0'- 6½"	14'-3"	1'-3"	15'-2"	56	24	55.232	1.528	140.485	16'- 2"	6	15'-10"	2	10	2.171	127.859	2.149	95.127	D
4	5	4	12"	3'-2"	0'- 7"	2'-3"	0'- 9⅜"	0'- 6¼"	14'-3"	1'-4"	15'-2"	56	32	58.056	1.603	153.443	16'- 2"	6	15'-10"	2	12	2.282	134.761	2.248	95.127	F
4	6	4	12"	3'-1"	0'- 7¼"	2'-3"	0'- 9¾"	0'- 6½"	14'-3"	1'-3"	15'-2"	56	40	60.880	1.722	183.256	16'- 2"	6	15'-10"	2	14	2.381	141.664	2.334	95.127	H
5	3	4	9"	3'-9"	0'- 9½"	2'-8"	1'- 1"	0'- 8¾"	17'-4"	1'-6"	18'-6"	68	16	62.428	1.879	182.405	19'- 2"	6	18'-10"	2	8	2.269	138.980	2.270	113.151	B
5	4	4	9"	3'-9"	0'- 9½"	2'-8"	1'- 1"	0'- 8¾"	17'-4"	1'-6"	18'-6"	68	24	65.252	1.978	191.202	19'- 2"	6	18'-10"	2	10	2.374	145.883	2.362	113.151	D
5	5	4	9"	3'-9"	0'- 9½"	2'-8"	1'- 1"	0'- 8¾"	17'-4"	1'-6"	18'-6"	68	32	68.076	2.075	205.187	19'- 2"	6	18'-10"	2	12	2.471	152.785	2.446	113.151	F
5	6	4	9"	3'-9"	0'- 9½"	2'-8"	1'- 1"	0'- 8¾"	17'-4"	1'-6"	18'-6"	68	40	70.900	2.173	219.080	19'- 2"	6	18'-10"	2	14	2.576	159.688	2.539	113.151	H
5	7	4	10"	3'-9"	0'- 9½"	2'-8"	1'- 1"	0'- 8¾"	17'-5"	1'-6"	18'-7"	68	48	73.724	2.299	238.475	19'- 2"	6	18'-10"	2	16	2.681	166.591	2.632	113.151	J
6	4	4	9"	4'-4"	1'- ½"	3'-0"	1'- 5⅛"	0'-11¾"	20'-4"	1'-8"	21'-11"	80	24	75.272	2.606	240.773	22'- 2"	6	21'-10"	2	10	2.526	163.907	2.524	131.175	E
6	5	4	9"	4'-4"	1'- 0"	3'-0"	1'- 4½"	0'-11¼"	20'-4"	1'-9"	21'-10"	80	32	78.096	2.640	254.688	22'- 2"	6	21'-10"	2	12	2.631	170.809	2.617	131.175	G
6	6	4	9"	4'-4"	1'- 0"	3'-0"	1'- 4½"	0'-11¼"	20'-4"	1'-9"	21'-10"	80	40	80.920	2.738	266.899	22'- 2"	6	21'-10"	2	14	2.758	177.712	2.732	131.175	I
6	7	4	9"	4'-4"	1'- 0"	3'-0"	1'- 4½"	0'-11¼"	20'-4"	1'-9"	21'-10"	80	48	83.744	2.834	299.565	22'- 2"	6	21'-10"	2	16	2.864	184.615	2.825	131.175	K
6	8	4	9"	4'-6"	1'- 0"	3'-0"	1'- 4½"	0'-11¼"	20'-7"	1'-9"	22'-1"	80	56	86.568	3.030	331.062	22'- 2"	6	21'-10"	2	18	2.969	191.517	2.917	131.175	M
7	4	5	9"	4'-11"	1'- 2½"	3'-5"	1'- 7⅞"	1'- 1⅝"	23'-4"	1'-11"	25'-2"	92	24	85.292	3.198	321.237	25'- 2"	6	24'-10"	2	10	2.649	181.931	2.657	149.199	E
7	6	5	9"	4'-11"	1'- 2½"	3'-5"	1'- 7⅞"	1'- 1⅝"	23'-4"	1'-11"	25'-2"	92	40	90.940	3.393	351.266	25'- 2"	6	24'-10"	2	14	2.859	195.736	2.842	149.199	I
7	8	5	9"	5'-1"	1'- 2"	3'-5"	1'- 7⅛"	1'- 1⅛"	23'-7"	2'-0"	25'-4"	92	56	96.588	3.616	398.726	25'- 2"	6	24'-10"	2	18	3.069	209.541	3.028	149.199	M
7	10	5	9"	5'-3"	1'- 2"	3'-5"	1'- 7⅛"	1'- 1⅛"	23'-11"	2'-0"	25'-8"	92	72	102.236	3.986	482.871	25'- 2"	6	24'-10"	2	22	3.140	223.347	3.073	149.199	Q
8	4	6	9"	5'-7"	1'- 5"	3'-10"	1'-11¼"	1'- 4"	26'-4"	2'-2"	28'-6"	104	24	95.312	3.942	457.422	28'- 2"	6	27'-10"	2	10	2.703	199.955	2.721	167.223	E
8	6	5	8"	5'-6"	1'- 5"	3'-10"	1'-11⅜"	1'- 4⅛"	26'-4"	2'-1"	28'-6"	104	40	100.960	4.142	421.090	28'- 2"	6	27'-10"	2	14	2.913	213.760	2.906	167.223	I
8	8	5	8"	5'-7"	1'- 4½"	3'-10"	1'-10¾"	1'- 3⅝"	26'-5"	2'-2"	28'-6"	104	56	106.608	4.288	483.673	28'- 2"	6	27'-10"	2	18	3.123	227.565	3.092	167.223	M
8	10	5	8"	5'-10"	1'- 4½"	3'-10"	1'-10¾"	1'- 3⅝"	26'-11"	2'-2"	29'-0"	104	72	112.256	4.735	546.994	28'- 2"	6	27'-10"	2	22	3.190	241.371	3.132	167.223	Q
9	4	6	9"	6'-2"	1'- 7"	4'-3"	2'- 2⅛"	1'- 6"	29'-4"	2'-5"	31'-9"	116	24	105.332	4.693	504.698	31'- 2"	6	30'-10"	2	10	2.765	217.979	2.793	185.247	F
9	6	6	9"	6'-2"	1'- 7"	4'-3"	2'- 2⅛"	1'- 6"	29'-4"	2'-5"	31'-9"	116	40	110.980	4.888	538.646	31'- 2"	6	30'-10"	2	14	2.975	231.784	2.978	185.247	J
9	8	6	9"	6'-3"	1'- 7"	4'-3"	2'- 2⅛"	1'- 6"	29'-5"	2'-5"	31'-10"	116	56	116.628	5.117	610.412	31'- 2"	6	30'-10"	2	18	3.185	245.589	3.164	185.247	N
9	10	6	9"	6'-6"	1'- 7"	4'-3"	2'- 2⅛"	1'- 6"	29'-11"	2'-5"	32'-4"	116	72	122.276	5.571	681.462	31'- 2"	6	30'-10"	2	22	3.249	259.395	3.201	185.247	R
9	12	6	9"	6'-8"	1'- 7"	4'-3"	2'- 2⅛"	1'- 6"	30'-4"	2'-5"	32'-9"	116	88	127.924	6.050	761.471	31'- 2"	6	30'-10"	2	26	3.317	273.200	3.243	185.247	V
10	4	6	9"	6'-9"	1'-10"	4'-8"	2'- 6⅜"	1'- 9"	32'-3"	2'-6"	35'-2"	128	24	115.352	5.720	556.431	34'- 2"	6	33'-10"	2	10	2.731	236.003	2.769	203.271	F
10	6	6	9"	6'-9"	1'- 9½"	4'-8"	2'- 5⅝"	1'- 8½"	32'-3"	2'-7"	35'-1"	128	40	121.000	5.814	592.755	34'- 2"	6	33'-10"	2	14	2.941	249.808	2.954	203.271	J
10	8	6	9"	6'-9"	1'- 9½"	4'-8"	2'- 5⅝"	1'- 8½"	32'-3"	2'-7"	35'-1"	128	56	126.648	6.006	662.601	34'- 2"	6	33'-10"	2	18	3.152	263.613	3.140	203.271	N
10	10	6	9"	7'-0"	1'- 9½"	4'-8"	2'- 5⅝"	1'- 8½"	32'-9"	2'-7"	35'-7"	128	72	132.296	6.463	725.436	34'- 2"	6	33'-10"	2	22	3.210	277.419	3.172	203.271	R
10	12	6	9"	7'-3"	1'- 9½"	4'-8"	2'- 5⅝"	1'- 8½"	33'-3"	2'-7"	36'-1"	128	88	137.944	6.992	804.999	34'- 2"	6	33'-10"	2	26	3.275	291.224	3.211	203.271	V
12	6	7	9"	8'-0"	2'- 2½"	5'-5"	3'- ⅝"	2'- 1¼"	38'-3"	3'-0"	41'-9"	152	40	141.040	7.932	855.425	40'- 2"	6	39'-10"	2	14	2.828	285.856	2.861	239.319	K
12	8	7	9"	8'-0"	2'- 2½"	5'-5"	3'- ⅝"	2'- 1¼"	38'-3"	3'-0"	41'-9"	152	56	146.688	8.124	919.861	40'- 2"	6	39'-10"	2	18	3.063	299.661	3.071	239.319	O
12	10	7	8"	8'-1"	2'- 2½"	5'-5"	3'- ⅝"	2'- 1¼"	38'-7"	3'-0"	42'-0"	152	72	152.336	8.471	1103.668	40'- 2"	6	39'-10"	2	22	3.089	313.467	3.071	239.319	S
12	12	7	8"	8'-5"	2'- 2½"	5'-5"	3'- ⅝"	2'- 1¼"	39'-1"	3'-0"	42'-7"	152	88	157.984	9.025	1194.524	40'- 2"	6	39'-10"	2	26	3.123	327.272	3.079	239.319	W

A COPY OF THE ORIGINAL SEALED AND SIGNED DRAWING IS ON FILE IN THE CENTRAL OFFICE.

SPECIFICATION REFERENCE

TRIPLE BOX CULVERTS

40 TO 50 FT. FILLS

VIRGINIA DEPARTMENT OF TRANSPORTATION

VDOT

ROAD AND BRIDGE STANDARDS

REVISION DATE 07/11

SHEET 2 OF 2

1004.18

BCQ-DT

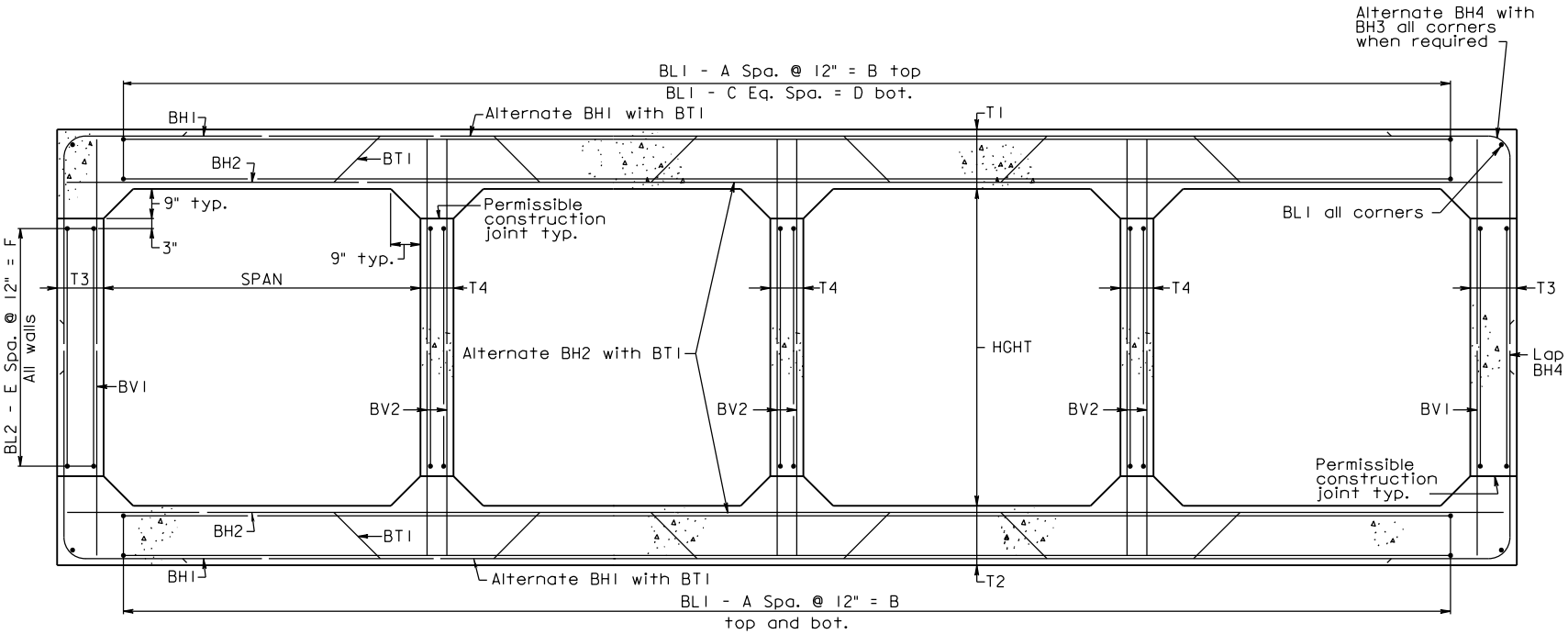

TYPICAL SECTION

A COPY OF THE ORIGINAL SEALED AND SIGNED DRAWING IS ON FILE IN THE CENTRAL OFFICE.

VDOT ROAD AND BRIDGE STANDARDS	QUADRUPLE BOX CULVERTS	SPECIFICATION REFERENCE
SHEET 1 OF 3	STANDARD DETAILS	
REVISION DATE	VIRGINIA DEPARTMENT OF TRANSPORTATION	
1005.01 / 07/11		

GENERAL NOTE

Capacity: AASHTO HI-93 Loading.

Specifications:

Construction - Virginia Department of Transportation Road and Bridge Specifications.

Design - AASHTO LRFD Bridge Design Specifications, 5th Edition 2010; 2011 Interim Specifications; and VDOT Modifications.

All concrete shall be Class A4.

Deformed reinforcing bars shall conform to ASTM A615, Grade 60. All reinforcing bar dimensions on the detailed drawings are to centers of bars except where otherwise noted and are subject to fabrication and construction tolerances.

Construction joints shall be constructed and bonded in accordance with the current Road and Bridge Specifications.

Barrels more than 35' in length shall be poured in sections by providing vertical construction joints, not exceeding 25' between joints nor more than 30' from ends of barrels.

** All bends shall be made with a pin diameter as listed in TABLE A except for Bars BH3 and BH4 which shall have a pin diameter of 24 bar diameters.

Dimensions on bar diagrams are out-to-out of bars. Bars are straight and #4 size unless otherwise shown. BL2 shall be #3 size.

The number of BL1 and BL2 bars shown in the table is the number of longitudinal bars shown in the Typical Section and may not equal the total number of bars required. BL1 and BL2 shall have a lap of 30 bar diameters at splices. At construction joints, first placed bars shall project 30 bar diameters beyond the joint. Estimated QUAN./LF shown for reinforcing steel does not include quantity for laps of BL1 and BL2 bars. The additional weight per longitudinal lap is shown in the table.

The minimum cover of main reinforcing bars shall be 2½" from the face of the concrete for culverts under 0 to 2 foot fills and shall be 2" from the face of cencrete for all other culverts.

All reinforcing steel for culverts under 0 to 2 foot fills shall be Low Carbon/Chromium Reinforcing Steel conforming to ASTM A1035.

At the Contractor's option, BV1 and BV2 bars may be spliced at the permissible construction joint in order to facilitate construction. No additional compensation shall be provided for the increase in reinforcing steel quantity due to the splices.

Bar HW2 shall be 4" less than culvert height in length.

Headwall quantities shown assume wingwalls are to be built at a 45° angle to the headwall.

The designs are applicable to the fill height and other conditions indicated. Any change in the conditions invalidates these designs.

Wingwalls referenced by letter apply when the acceptable foundation level is the same for both box and wings. If foundation levels are different, the height of the wingwall shall be adjusted by selection of another lettered wingwall of appropriate height. For wingwall details, refer to standard series BCW for the appropriate fill slope.

For details of extending existing boxes, refer to Standard BCE-01.

For modification of details for skewed culverts, see the skewed box details included in the road plans.

This standard shall be used with the BCQ standard series.

A COPY OF THE ORIGINAL SEALED AND SIGNED DRAWING IS ON FILE IN THE CENTRAL OFFICE.

SPECIFICATION REFERENCE	QUADRUPLE BOX CULVERTS STANDARD DETAILS VIRGINIA DEPARTMENT OF TRANSPORTATION	VDOT ROAD AND BRIDGE STANDARDS	
		REVISION DATE	SHEET 2 OF 3
		07/12	1005.02

BCQ-DT

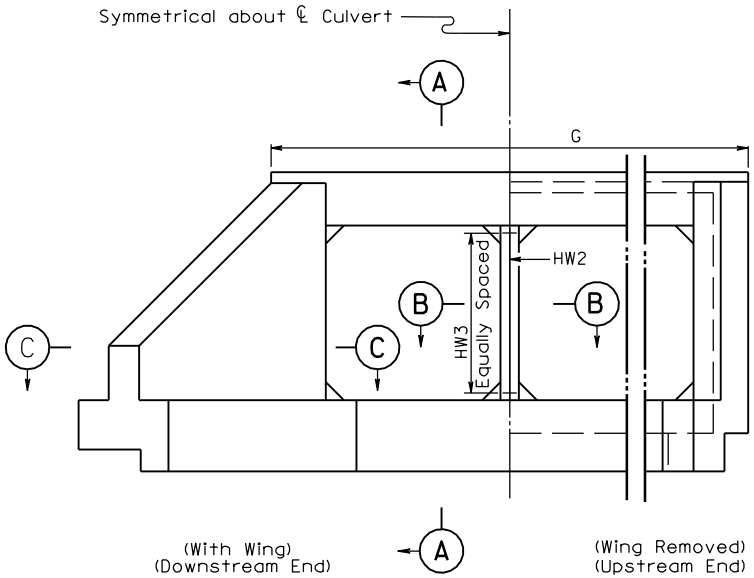

END ELEVATION

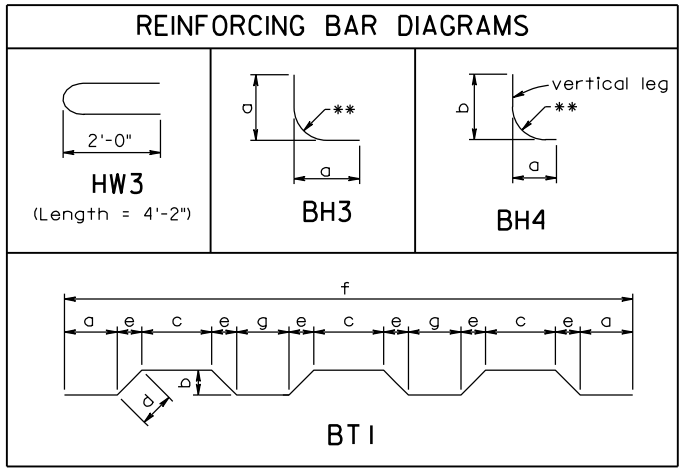

TABLE A	
Bar Size	Pin Dia.
#3	2¼"
#4	3"
#5	3¾"
#6	4½"
#7	5¼"
#8	6"
#9	9"

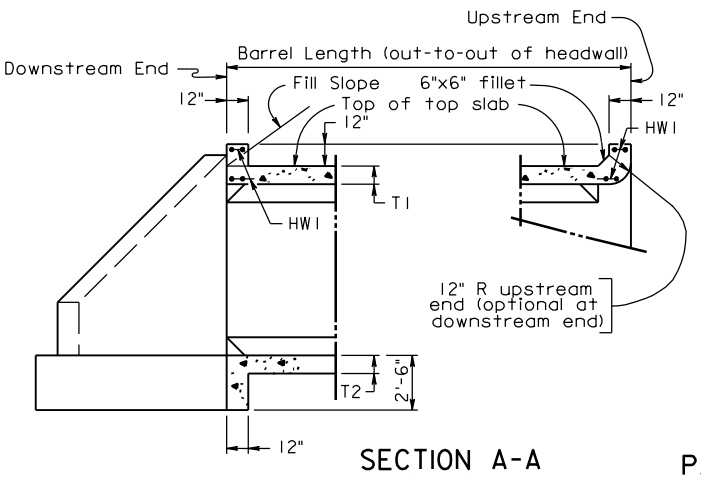

SECTION A-A
(With Wing)

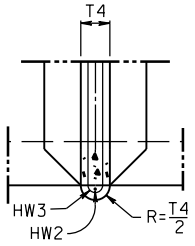

PART SECTION B-B
UPSTREAM END
(Optional at downstream end)

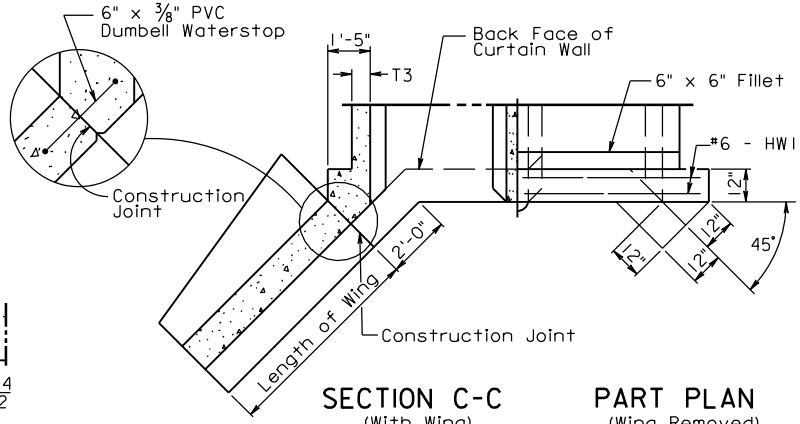

SECTION C-C
(With Wing)
(Downstream End)

PART PLAN
(Wing Removed)
(Upstream End)

VDOT
ROAD AND BRIDGE STANDARDS

SHEET 3 OF 3

1005.03

REVISION DATE
07/11

QUADRUPLE BOX CULVERTS

STANDARD DETAIL

VIRGINIA DEPARTMENT OF TRANSPORTATION

SPECIFICATION REFERENCE

BCQ-DT

THIS PAGE INTENTIONALLY LEFT BLANK

SPECIFICATION REFERENCE	QUADRUPLE BOX CULVERTS STANDARD DETAILS VIRGINIA DEPARTMENT OF TRANSPORTATION	VDOT ROAD AND BRIDGE STANDARDS	
		REVISION DATE 07/11	SHEET 1 OF 1 1005.04

BCQ-02

FOR TYPICAL SECTION, NOTES AND OTHER DETAILS, REFER TO STANDARD BCQ-DT.

DIMENSIONS						REINFORCING STEEL																										
SPAN	HGHT	T1	T2	T3	T4							BH1			BH2			BH3				BH4					BV1			BV2		
(FT.)	(FT.)	TOP SLAB	BOTTOM SLAB	EXTERIOR WALL (IN.)	INTERIOR WALL (IN.)	A	B	C	D	E	F	SIZE	SPACING C-C	LENGTH	SIZE	SPACING C-C	LENGTH	SIZE	SPACING C-C	a	LENGTH	SIZE	SPACING C-C	a	b	LENGTH	SIZE	SPACING C-C	LENGTH	SIZE	SPACING C-C	LENGTH
3	3	8"	8"	8"	8"	13	13'- 0"	26	13'- 0"	1	1'- 0"	4	12"	14'-10"	4	12"	15'- 0"	--	---	-----	-----	4	12"	2'- 1¼"	2'- 8"	4'- 6"	4	12"	4'- 0"	4	12"	4'- 0"
3	4	8"	8"	8"	8"	13	13'- 0"	26	13'- 0"	2	2'- 0"	4	12"	14'-10"	4	12"	15'- 0"	4	12"	2'- 4"	4'- 6"	4	12"	2'- 1¼"	3'- 2"	5'- 0"	4	12"	5'- 0"	4	10"	5'- 0"
4	3	9¼"	9¼"	8"	8"	17	17'- 0"	34	17'- 0"	1	1'- 0"	4	12"	18'- 5"	4	12"	19'- 0"	4	12"	2'- 3⅝"	4'- 4"	4	12"	2'- 3⅝"	2'- 9¼"	4'-10"	4	12"	4'- 2"	4	12"	4'- 2"
4	4	9¼"	9¼"	8"	8"	17	17'- 0"	34	17'- 0"	2	2'- 0"	4	12"	18'- 5"	4	12"	19'- 0"	4	12"	2'- 3⅝"	4'- 4"	4	12"	2'- 3⅝"	3'- 3¼"	5'- 4"	4	12"	5'- 2"	4	9½"	5'- 2"
4	5	9½"	9½"	8"	8"	17	17'- 0"	34	17'- 0"	3	3'- 0"	4	12"	18'- 5"	4	12"	19'- 0"	4	12"	2'- 8"	5'- 1"	4	12"	2'- 3⅝"	3'- 9½"	5'-10"	4	12"	6'- 3"	4	9"	6'- 3"
4	6	9½"	9½"	8"	8"	17	17'- 0"	34	17'- 0"	4	4'- 0"	4	12"	18'- 5"	4	12"	19'- 0"	4	12"	2'-11"	5'- 7"	4	12"	2'- 3⅝"	4'- 3½"	6'- 4"	4	12"	7'- 3"	4	9"	7'- 3"
5	3	9"	9"	8"	8"	21	21'- 0"	42	21'- 0"	1	1'- 0"	4	11"	22'- 0"	4	11"	23'- 0"	4	11"	2'- 6"	4'- 9"	4	11"	2'- 6"	2'- 9"	5'- 0"	4	12"	4'- 2"	4	10"	4'- 2"
5	4	9"	9"	8"	8"	21	21'- 0"	42	21'- 0"	2	2'- 0"	4	11"	22'- 0"	4	11"	23'- 0"	4	11"	2'- 6"	4'- 9"	4	11"	2'- 6"	3'- 3"	5'- 6"	4	12"	5'- 2"	4	7½"	5'- 2"
5	5	9"	9"	8"	8"	21	21'- 0"	42	21'- 0"	3	3'- 0"	4	11"	22'- 0"	4	11"	23'- 0"	4	11"	2'- 6"	4'- 9"	4	11"	2'- 6"	3'- 9"	6'- 0"	4	12"	6'- 2"	4	7"	6'- 2"
5	6	9"	9"	8"	8"	21	21'- 0"	42	21'- 0"	4	4'- 0"	4	11"	22'- 0"	5	11"	23'- 0"	4	11"	2'-11"	5'- 7"	4	11"	2'- 6"	4'- 3"	6'- 6"	4	12"	7'- 2"	4	7"	7'- 2"
5	7	9"	9"	8"	8"	21	21'- 0"	42	21'- 0"	5	5'- 0"	4	10"	22'- 0"	4	10"	23'- 0"	4	10"	3'- 1"	5'-10"	4	10"	2'- 6"	4'- 9"	7'- 0"	4	12"	8'- 2"	4	6½"	8'- 2"
6	4	8¾"	8¾"	8"	8"	25	25'- 0"	50	25'- 0"	2	2'- 0"	4	9"	25'-11"	4	9"	27'- 0"	4	9"	2'- 8⅜"	5'- 2"	4	9"	2'- 8⅜"	3'- 2¾"	5'- 8"	4	12"	5'- 2"	5	9½"	5'- 2"
6	5	8¾"	8¾"	8"	8"	25	25'- 0"	50	25'- 0"	3	3'- 0"	4	9"	25'-11"	4	9"	27'- 0"	4	9"	2'- 8⅜"	5'- 2"	4	9"	2'- 8⅜"	3'- 8¾"	6'- 2"	4	12"	6'- 2"	5	9"	6'- 2"
6	6	8¾"	8¾"	8"	8"	25	25'- 0"	50	25'- 0"	4	4'- 0"	4	9"	25'-11"	4	9"	27'- 0"	4	9"	2'- 8⅜"	5'- 2"	4	9"	2'- 8⅜"	4'- 2¾"	6'- 8"	4	12"	7'- 2"	4	5½"	7'- 2"
6	7	8¾"	8¾"	8"	8"	25	25'- 0"	50	25'- 0"	5	5'- 0"	4	9"	25'-11"	4	9"	27'- 0"	4	9"	3'- 1"	5'-10"	4	9"	2'- 8⅜"	4'- 8¾"	7'- 2"	4	12"	8'- 2"	4	5½"	8'- 2"
6	8	8¾"	8¾"	8"	8"	25	25'- 0"	50	25'- 0"	6	6'- 0"	4	8"	25'-11"	4	8"	27'- 0"	4	8"	3'- 4"	6'- 6"	4	8"	2'- 8⅜"	5'- 2¾"	7'- 8"	4	12"	9'- 2"	4	5½"	9'- 2"
7	4	8¾"	8¾"	8"	8"	29	29'- 0"	58	29'- 0"	2	2'- 0"	4	8"	29'-11"	4	8"	31'- 0"	4	8"	2'-10¾"	5'- 6"	4	8"	2'-10¾"	3'- 2¾"	5'-10"	4	12"	5'- 2"	4	7"	5'- 2"
7	6	8¾"	8¾"	8"	8"	29	29'- 0"	58	29'- 0"	4	4'- 0"	4	8"	29'-11"	4	8"	31'- 0"	4	8"	2'-10¾"	5'- 6"	4	8"	2'-10¾"	4'- 2¾"	6'-10"	4	12"	7'- 2"	4	7"	7'- 2"
7	8	8¾"	8¾"	8"	8"	29	29'- 0"	58	29'- 0"	6	6'- 0"	5	11"	29'-11"	5	11"	31'- 0"	4	11"	3'- 4"	6'- 6"	5	11"	2'-10¾"	5'- 2¾"	7'-10"	4	12"	9'- 2"	4	7"	9'- 2"
7	10	9"	9"	8"	8"	29	29'- 0"	58	29'- 0"	8	8'- 0"	5	11"	29'-11"	5	11"	31'- 0"	4	11"	3'- 8"	6'-11"	5	11"	2'-10¾"	6'- 3"	8'-10"	4	12"	11'- 2"	4	7½"	11'- 2"
8	4	9"	9"	8"	8"	33	33'- 0"	66	33'- 0"	2	2'- 0"	5	12"	33'- 8"	5	12"	35'- 0"	--	---	-----	-----	6	12"	3'- 7"	3'- 7"	6'- 9"	4	12"	5'- 2"	5	9½"	5'- 2"
8	6	9"	9"	8"	8"	33	33'- 0"	66	33'- 0"	4	4'- 0"	5	11"	33'- 8"	5	11"	35'- 0"	4	11"	3'- 1¼"	5'-11"	5	11"	3'- 1¼"	4'- 3"	7'- 0"	4	12"	7'- 2"	4	6"	7'- 2"
8	8	9¼"	9¼"	8"	8"	33	33'- 0"	66	33'- 0"	6	6'- 0"	5	11"	33'- 8"	5	11"	35'- 0"	4	11"	3'- 1¼"	5'-11"	5	11"	3'- 1¼"	5'- 3¼"	8'- 1"	4	12"	9'- 2"	5	9½"	9'- 2"
8	10	9¼"	9¼"	8"	8"	33	33'- 0"	66	33'- 0"	8	8'- 0"	5	10"	33'- 8"	5	10"	35'- 0"	4	10"	3'- 8"	6'-11"	5	10"	3'- 1¼"	6'- 3¼"	9'- 1"	4	12"	11'- 2"	4	6½"	11'- 2"
9	4	9½"	9½"	8"	8"	37	37'- 0"	74	37'- 0"	2	2'- 0"	5	11"	37'- 8"	5	11"	39'- 0"	--	---	-----	-----	6	11"	3'-10"	3'- 7"	7'- 0"	4	12"	5'- 3"	4	5½"	5'- 3"
9	6	9½"	9½"	8"	8"	37	37'- 0"	74	37'- 0"	4	4'- 0"	5	10"	37'- 8"	5	10"	39'- 0"	4	10"	3'- 3⅝"	6'- 4"	5	10"	3'- 3⅝"	4'- 3½"	7'- 3"	4	12"	7'- 3"	4	5½"	7'- 3"
9	8	9½"	9½"	8"	8"	37	37'- 0"	74	37'- 0"	6	6'- 0"	5	10"	37'- 8"	5	10"	39'- 0"	4	10"	3'- 3⅝"	6'- 4"	5	10"	3'- 3⅝"	5'- 3½"	8'- 3"	4	12"	9'- 3"	4	5½"	9'- 3"
9	10	9"	9"	8"	8"	37	37'- 0"	74	37'- 0"	8	8'- 0"	5	9"	37'- 8"	5	9"	39'- 0"	4	9"	3'- 8"	6'-11"	5	9"	3'- 3⅝"	6'- 3"	9'- 3"	4	12"	11'- 2"	5	8"	11'- 2"
9	12	9"	9"	8"	8"	37	37'- 0"	74	37'- 0"	10	10'- 0"	6	12"	37'- 8"	6	12"	39'- 0"	5	12"	4'- 1"	7'-11"	6	12"	3'-10"	7'- 7"	11'- 0"	5	10½"	13'- 2"	4	5½"	13'- 2"
10	4	9¾"	9¾"	8"	8"	41	41'- 0"	82	41'- 0"	2	2'- 0"	5	10"	41'- 8"	5	10"	43'- 0"	--	---	-----	-----	6	10"	4'- 0"	3'- 8"	7'- 3"	4	12"	5'- 3"	5	8"	5'- 3"
10	6	9¾"	9¾"	8"	8"	41	41'- 0"	82	41'- 0"	4	4'- 0"	5	9"	41'- 8"	5	9"	43'- 0"	--	---	-----	-----	5	9"	3'- 6"	4'- 3¾"	7'- 6"	4	12"	7'- 3"	4	5"	7'- 3"
10	8	9¾"	9¾"	8"	8"	41	41'- 0"	82	41'- 0"	6	6'- 0"	6	12"	41'- 8"	6	12"	43'- 0"	4	12"	3'- 6"	6'- 9"	6	12"	4'- 0"	5'- 8"	9'- 3"	4	12"	9'- 3"	4	5"	9'- 3"
10	10	9¾"	9¾"	8"	8"	41	41'- 0"	82	41'- 0"	8	8'- 0"	5	8"	41'- 8"	5	8"	43'- 0"	4	8"	3'- 8"	6'-11"	5	8"	3'- 6"	6'- 3¾"	9'- 6"	4	12"	11'- 3"	5	8"	11'- 3"
10	12	9¾"	9¾"	8"	8"	41	41'- 0"	82	41'- 0"	10	10'- 0"	5	8"	41'- 8"	5	8"	43'- 0"	4	8"	4'- 1"	7'-11"	5	8"	3'- 6"	7'- 3¾"	10'- 6"	5	10½"	13'- 3"	5	8"	13'- 3"
12	6	10¼"	10¼"	8"	8"	49	49'- 0"	98	49'- 0"	4	4'- 0"	6	8"	49'- 8"	5	8"	51'- 0"	4	8"	3'-10¾"	7'- 6"	5	8"	3'-10¾"	4'- 4¼"	7'-11"	4	12"	7'- 5"	5	6½"	7'- 5"
12	8	10¼"	10¼"	8"	8"	49	49'- 0"	98	49'- 0"	6	6'- 0"	5	8"	49'- 8"	5	8"	51'- 0"	4	8"	3'-10¾"	7'- 6"	5	8"	3'-10¾"	5'- 4¼"	8'-11"	4	10½"	9'- 5"	5	6½"	9'- 5"
12	10	10¼"	10¼"	8"	8"	49	49'- 0"	98	49'- 0"	8	8'- 0"	6	11"	49'- 8"	6	11"	51'- 0"	--	---	-----	-----	7	11"	4'-10"	6'-11"	11'- 3"	4	12"	11'- 5"	6	9½"	11'- 5"
12	12	10¼"	10¼"	8"	8"	49	49'- 0"	98	49'- 0"	10	10'- 0"	6	10"	49'- 8"	6	10"	51'- 0"	4	10"	4'- 1"	7'-11"	6	10"	4'- 5"	7'- 8"	11'- 8"	5	10"	13'- 5"	6	9½"	13'- 5"

A COPY OF THE ORIGINAL SEALED AND SIGNED DRAWING IS ON FILE IN THE CENTRAL OFFICE.

VDOT
ROAD AND BRIDGE STANDARDS

SHEET 1 OF 2 | REVISION DATE
1005.05 | 07/11

QUADRUPLE BOX CULVERTS

0 TO 2 FT. FILLS

VIRGINIA DEPARTMENT OF TRANSPORTATION

SPECIFICATION REFERENCE

BCQ-02

FOR TYPICAL SECTION, NOTES AND OTHER DETAILS, REFER TO STANDARD BCQ-DT.

SPAN (FT.)	HGHT (FT.)	REINFORCING STEEL BT1 SIZE	SPACING c-c	a	b	c	d	e	f	g	LENGTH	NO. BL1 #4 BARS	NO. BL2 #3 BARS	REINFORCING STEEL (LBS/LONG. JT)	QUAN./LF CONCRETE CLASS A4 (CY/LF)	REINFORCING STEEL (LBS/LF)	HEADWALLS G HEADWALL LENGTH	HW1 SIZE	HW1 LENGTH	NO. HW2 BARS	NO. HW3 BARS	INLET CONCRETE CL. A4 (CY)	INLET REINFORCING STEEL (LBS)	OUTLET CONCRETE CL. A4 (CY)	OUTLET REINFORCING STEEL (LBS)	WINGWALL
3	3	4	12"	2'- 8 7/8"	0'- 4 1/2"	1'- 6 5/8"	0'- 5 7/8"	0'- 3 3/4"	14'-11 7/8"	1'- 5 7/8"	15'- 9"	73	20	68.015	1.283	150.583	16'-10"	6	16'- 6"	3	12	2.222	137.876	2.191	99.132	A
3	4	4	12"	2'- 8 7/8"	0'- 4 1/2"	1'- 6 5/8"	0'- 5 7/8"	0'- 3 3/4"	14'-11 7/8"	1'- 5 7/8"	15'- 9"	73	30	71.545	1.404	182.264	16'-10"	6	16'- 6"	3	15	2.333	148.230	2.284	99.132	C
4	3	4	12"	3'- 5 7/8"	0'- 5 3/4"	1'-10 1/4"	0'- 7 5/8"	0'- 5"	19'- 0"	1'-11 3/4"	20'- 0"	93	20	84.715	1.626	193.113	20'-10"	6	20'- 6"	3	12	2.595	161.908	2.577	123.164	B
4	4	4	12"	3'- 5 7/8"	0'- 5 3/4"	1'-10 1/4"	0'- 7 5/8"	0'- 5"	19'- 0"	1'-11 3/4"	20'- 0"	93	30	88.245	1.749	209.002	20'-10"	6	20'- 6"	3	15	2.706	172.262	2.670	123.164	D
4	5	4	12"	3'- 5 3/4"	0'- 6"	1'-10"	0'- 8"	0'- 5 1/4"	19'- 0"	1'-11 1/2"	20'- 1"	93	40	91.775	1.901	225.081	20'-10"	6	20'- 6"	3	18	2.808	182.616	2.753	123.164	F
4	6	4	12"	3'- 5 3/4"	0'- 6"	1'-10"	0'- 8"	0'- 5 1/4"	19'- 0"	1'-11 1/2"	20'- 1"	93	50	95.305	2.023	245.516	20'-10"	6	20'- 6"	3	21	2.919	192.970	2.845	123.164	H
5	3	4	11"	4'- 3 5/8"	0'- 5 1/2"	2'- 3 1/4"	0'- 7 1/4"	0'- 4 3/4"	23'- 0"	2'- 7 1/4"	24'- 0"	113	20	101.415	1.815	237.595	24'-10"	6	24'- 6"	3	12	2.979	185.940	2.974	147.196	A
5	4	4	11"	4'- 3 5/8"	0'- 5 1/2"	2'- 3 1/4"	0'- 7 1/4"	0'- 4 3/4"	23'- 0"	2'- 7 1/4"	24'- 0"	113	30	104.945	1.937	257.242	24'-10"	6	24'- 6"	3	15	3.090	196.294	3.067	147.196	C
5	5	4	11"	4'- 3 5/8"	0'- 5 1/2"	2'- 3 1/4"	0'- 7 1/4"	0'- 4 3/4"	23'- 0"	2'- 7 1/4"	24'- 0"	113	40	108.475	2.060	273.033	24'-10"	6	24'- 6"	3	18	3.201	206.648	3.160	147.196	E
5	6	4	11"	4'- 3 5/8"	0'- 5 1/2"	2'- 3 1/4"	0'- 7 1/4"	0'- 4 3/4"	23'- 0"	2'- 7 1/4"	24'- 0"	113	50	112.005	2.180	316.776	24'-10"	6	24'- 6"	3	21	3.313	217.002	3.253	147.196	G
5	7	4	10"	4'- 3 5/8"	0'- 5 1/2"	2'- 3 1/4"	0'- 7 1/4"	0'- 4 3/4"	23'- 0"	2'- 7 1/4"	24'- 0"	113	60	115.535	2.302	329.987	24'-10"	6	24'- 6"	3	24	3.424	227.356	3.345	147.196	I
6	4	4	9"	5'- 1 3/8"	0'- 5 1/4"	2'- 8 1/4"	0'- 6 7/8"	0'- 4 1/2"	27'- 0"	3'- 2 3/4"	27'-11"	133	30	121.645	2.112	329.861	28'-10"	6	28'- 6"	3	15	3.499	220.326	3.489	171.228	C
6	5	4	9"	5'- 1 3/8"	0'- 5 1/4"	2'- 8 1/4"	0'- 6 7/8"	0'- 4 1/2"	27'- 0"	3'- 2 3/4"	27'-11"	133	40	125.175	2.233	359.273	28'-10"	6	28'- 6"	3	18	3.610	230.680	3.582	171.228	E
6	6	4	9"	5'- 1 3/8"	0'- 5 1/4"	2'- 8 1/4"	0'- 6 7/8"	0'- 4 1/2"	27'- 0"	3'- 2 3/4"	27'-11"	133	50	128.705	2.355	379.181	28'-10"	6	28'- 6"	3	21	3.721	241.034	3.674	171.228	G
6	7	4	9"	5'- 1 3/8"	0'- 5 1/4"	2'- 8 1/4"	0'- 6 7/8"	0'- 4 1/2"	27'- 0"	3'- 2 3/4"	27'-11"	133	60	132.235	2.477	397.761	28'-10"	6	28'- 6"	3	24	3.833	251.388	3.767	171.228	I
6	8	4	8"	5'- 1 3/8"	0'- 5 1/4"	2'- 8 1/4"	0'- 6 7/8"	0'- 4 1/2"	27'- 0"	3'- 2 3/4"	27'-11"	133	70	135.765	2.598	438.628	28'-10"	6	28'- 6"	3	27	3.944	261.742	3.860	171.228	K
7	4	4	8"	5'-11"	0'- 5 1/4"	3'- 1 1/8"	0'- 6 7/8"	0'- 4 1/2"	31'- 1/8"	3'- 9 7/8"	31'-11"	153	30	138.345	2.323	397.868	32'-10"	6	32'- 6"	3	15	3.894	244.358	3.898	195.260	C
7	6	4	8"	5'-11"	0'- 5 1/4"	3'- 1 1/8"	0'- 6 7/8"	0'- 4 1/2"	31'- 1/8"	3'- 9 7/8"	31'-11"	153	50	145.405	2.568	426.453	32'-10"	6	32'- 6"	3	21	4.117	265.066	4.083	195.260	G
7	8	5	11"	5'-11"	0'- 5 3/8"	3'- 1 1/8"	0'- 7"	0'- 4 1/2"	31'- 1/8"	3'- 9 7/8"	31'-11"	153	70	152.465	2.810	481.580	32'-10"	6	32'- 6"	3	27	4.339	285.774	4.268	195.260	K
7	10	5	11"	5'-10 7/8"	0'- 5 5/8"	3'- 7/8"	0'- 7 3/8"	0'- 4 3/4"	31'- 1/8"	3'- 9 5/8"	32'- 0"	153	90	159.525	3.104	507.590	32'-10"	6	32'- 6"	3	33	4.543	306.482	4.435	195.260	O
8	4	5	12"	6'- 8 3/8"	0'- 5 5/8"	3'- 5 5/8"	0'- 7 3/8"	0'- 4 3/4"	34'-11 7/8"	4'- 4 7/8"	35'-11"	173	30	155.045	2.590	442.425	36'-10"	6	36'- 6"	3	15	4.267	268.390	4.284	219.292	C
8	6	5	11"	6'- 8 3/8"	0'- 5 5/8"	3'- 5 5/8"	0'- 7 3/8"	0'- 4 3/4"	34'-11 7/8"	4'- 4 7/8"	35'-11"	173	50	162.105	2.833	501.470	36'-10"	6	36'- 6"	3	21	4.490	289.098	4.469	219.292	G
8	8	5	11"	6'- 8 1/4"	0'- 5 7/8"	3'- 5 3/8"	0'- 7 3/4"	0'- 5"	34'-11 7/8"	4'- 4 5/8"	36'- 0"	173	70	169.165	3.132	531.756	36'-10"	6	36'- 6"	3	27	4.708	309.806	4.651	219.292	L
8	10	5	10"	6'- 8 1/4"	0'- 5 7/8"	3'- 5 3/8"	0'- 7 3/4"	0'- 5"	34'-11 7/8"	4'- 4 5/8"	36'- 0"	173	90	176.225	3.374	587.781	36'-10"	6	36'- 6"	3	33	4.931	330.514	4.836	219.292	P
9	4	5	11"	7'- 5 3/4"	0'- 6 1/8"	3'-10"	0'- 8 1/8"	0'- 5 1/4"	39'- 0"	4'-11 1/2"	40'- 1"	193	30	171.745	2.928	517.402	40'-10"	6	40'- 6"	3	15	4.627	292.422	4.657	243.324	D
9	6	5	10"	7'- 5 3/4"	0'- 6 1/8"	3'-10"	0'- 8 1/8"	0'- 5 1/4"	39'- 0"	4'-11 1/2"	40'- 1"	193	50	178.805	3.170	581.291	40'-10"	6	40'- 6"	3	21	4.850	313.130	4.843	243.324	H
9	8	5	10"	7'- 5 3/4"	0'- 6 1/8"	3'-10"	0'- 8 1/8"	0'- 5 1/4"	39'- 0"	4'-11 1/2"	40'- 1"	193	70	185.865	3.414	614.912	40'-10"	6	40'- 6"	3	27	5.072	333.838	5.028	243.324	L
9	10	5	9"	7'- 6"	0'- 5 5/8"	3'-10 1/2"	0'- 7 3/8"	0'- 4 3/4"	39'- 0"	5'- 0"	40'- 0"	193	90	192.925	3.534	695.825	40'-10"	6	40'- 6"	3	33	5.327	354.546	5.246	243.324	O
9	12	6	12"	7'- 6"	0'- 5 3/4"	3'-10 1/2"	0'- 7 1/2"	0'- 4 3/4"	39'- 0"	5'- 0"	39'-11"	193	110	199.985	3.775	776.824	40'-10"	6	40'- 6"	3	39	5.550	375.254	5.431	243.324	S
10	4	5	10"	8'- 3 1/4"	0'- 6 3/8"	4'- 2 1/2"	0'- 8 3/8"	0'- 5 1/2"	43'- 0"	5'- 6 1/2"	44'- 1"	213	30	188.445	3.224	595.266	44'-10"	6	44'- 6"	3	15	4.985	316.454	5.028	267.356	D
10	6	5	9"	8'- 3 1/4"	0'- 6 3/8"	4'- 2 1/2"	0'- 8 3/8"	0'- 5 1/2"	43'- 0"	5'- 6 1/2"	44'- 1"	213	50	195.505	3.466	651.157	44'-10"	6	44'- 6"	3	21	5.207	337.162	5.213	267.356	H
10	8	6	12"	8'- 3 1/4"	0'- 6 1/2"	4'- 2 1/2"	0'- 8 1/2"	0'- 5 1/2"	43'- 0"	5'- 6 1/2"	44'- 1"	213	70	202.565	3.706	739.583	44'-10"	6	44'- 6"	3	27	5.430	357.870	5.399	267.356	L
10	10	5	8"	8'- 3 1/4"	0'- 6 3/8"	4'- 2 1/2"	0'- 8 3/8"	0'- 5 1/2"	43'- 0"	5'- 6 1/2"	44'- 1"	213	90	209.625	3.948	809.034	44'-10"	6	44'- 6"	3	33	5.653	378.578	5.584	267.356	P
10	12	5	8"	8'- 3 1/4"	0'- 6 3/8"	4'- 2 1/2"	0'- 8 3/8"	0'- 5 1/2"	43'- 0"	5'- 6 1/2"	44'- 1"	213	110	216.685	4.191	862.850	44'-10"	6	44'- 6"	3	39	5.875	399.286	5.770	267.356	T
12	6	5	8"	9'-10 1/4"	0'- 6 7/8"	4'-11 5/8"	0'- 9 1/8"	0'- 6"	51'- 1/8"	6'- 8 3/8"	52'- 3"	253	50	228.905	4.085	928.213	52'-10"	6	52'- 6"	3	21	5.904	385.226	5.937	315.420	H
12	8	5	8"	9'-10 1/4"	0'- 6 7/8"	4'-11 5/8"	0'- 9 1/8"	0'- 6"	51'- 1/8"	6'- 8 3/8"	52'- 3"	253	70	235.965	4.334	906.204	52'-10"	6	52'- 6"	3	27	6.127	405.934	6.122	315.420	L
12	10	6	11"	9'-10 1/4"	0'- 7"	4'-11 5/8"	0'- 9 1/4"	0'- 6"	51'- 1/8"	6'- 8 3/8"	52'- 3"	253	90	243.025	4.577	949.949	52'-10"	6	52'- 6"	3	33	6.349	426.642	6.308	315.420	P
12	12	6	10"	9'-10 1/4"	0'- 7"	4'-11 5/8"	0'- 9 1/4"	0'- 6"	51'- 1/8"	6'- 8 3/8"	52'- 3"	253	110	250.085	4.815	1,069.659	52'-10"	6	52'- 6"	3	39	6.572	447.350	6.493	315.420	T

A COPY OF THE ORIGINAL SEALED AND SIGNED DRAWING IS ON FILE IN THE CENTRAL OFFICE.

SPECIFICATION REFERENCE

QUADRUPLE BOX CULVERTS

0 TO 2 FT. FILLS

VIRGINIA DEPARTMENT OF TRANSPORTATION

VDOT

ROAD AND BRIDGE STANDARDS

REVISION DATE 08/14

SHEET 2 OF 2

1005.06

BCQ-05

FOR TYPICAL SECTION, NOTES AND OTHER DETAILS, REFER TO STANDARD BCQ-DT.

DIMENSIONS						REINFORCING STEEL																										
SPAN	HGHT	T1	T2	T3	T4							BH1			BH2			BH3				BH4					BV1			BV2		
(FT.)	(FT.)	TOP SLAB	BOTTOM SLAB	EXTERIOR WALL (IN.)	INTERIOR WALL (IN.)	A	B	C	D	E	F	SIZE	SPACING C-C	LENGTH	SIZE	SPACING C-C	LENGTH	SIZE	SPACING C-C	a	LENGTH	SIZE	SPACING C-C	a	b	LENGTH	SIZE	SPACING C-C	LENGTH	SIZE	SPACING C-C	LENGTH
3	3	8"	8"	8"	8"	13	13'- 0"	13	13'- 0"	1	1'- 0"	4	12"	14'-10"	4	12"	15'- 0"	--	---	-----	-----	4	12"	2'- 1¼"	2'- 8"	4'- 6"	4	12"	4'- 0"	4	12"	4'- 0"
3	4	8"	8"	8"	8"	13	13'- 0"	13	13'- 0"	2	2'- 0"	4	12"	14'-10"	4	12"	15'- 0"	--	---	-----	-----	4	12"	2'- 1¼"	3'- 2"	5'- 0"	4	12"	5'- 0"	4	12"	5'- 0"
4	3	8"	8"	8"	8"	17	17'- 0"	17	17'- 0"	1	1'- 0"	4	12"	18'- 5"	4	12"	19'- 0"	--	---	-----	-----	4	12"	2'- 3⅝"	2'- 8"	4'- 8"	4	12"	4'- 0"	4	12"	4'- 0"
4	4	8"	8"	8"	8"	17	17'- 0"	17	17'- 0"	2	2'- 0"	4	12"	18'- 5"	4	12"	19'- 0"	4	12"	2'- 3⅝"	4'- 4"	4	12"	2'- 3⅝"	3'- 2"	5'- 2"	4	12"	5'- 0"	4	12"	5'- 0"
4	5	8"	8"	8"	8"	17	17'- 0"	17	17'- 0"	3	3'- 0"	4	12"	18'- 5"	4	12"	19'- 0"	4	12"	2'- 6"	4'- 9"	4	12"	2'- 3⅝"	3'- 8"	5'- 8"	4	12"	6'- 0"	4	11½"	6'- 0"
4	6	8"	8"	8"	8"	17	17'- 0"	17	17'- 0"	4	4'- 0"	4	12"	18'- 5"	4	12"	19'- 0"	4	12"	2'- 9"	5'- 5"	4	12"	2'- 3⅝"	4'- 2"	6'- 2"	4	12"	7'- 0"	4	11"	7'- 0"
5	3	8"	8"	8"	8"	21	21'- 0"	21	21'- 0"	1	1'- 0"	4	12"	22'- 0"	4	12"	23'- 0"	4	12"	2'- 6"	4'- 9"	4	12"	2'- 6"	2'- 8"	4'-11"	4	12"	4'- 0"	4	12"	4'- 0"
5	4	8"	8"	8"	8"	21	21'- 0"	21	21'- 0"	2	2'- 0"	4	12"	22'- 0"	4	12"	23'- 0"	4	12"	2'- 6"	4'- 9"	4	12"	2'- 6"	3'- 2"	5'- 5"	4	12"	5'- 0"	4	10"	5'- 0"
5	5	8"	8"	8"	8"	21	21'- 0"	21	21'- 0"	3	3'- 0"	4	12"	22'- 0"	4	12"	23'- 0"	4	12"	2'- 6"	4'- 9"	4	12"	2'- 6"	3'- 8"	5'-11"	4	12"	6'- 0"	4	10"	6'- 0"
5	6	8"	8"	8"	8"	21	21'- 0"	21	21'- 0"	4	4'- 0"	4	12"	22'- 0"	4	12"	23'- 0"	4	12"	2'- 9"	5'- 5"	4	12"	2'- 6"	4'- 2"	6'- 5"	4	12"	7'- 0"	4	10"	7'- 0"
5	7	8"	8"	8"	8"	21	21'- 0"	21	21'- 0"	5	5'- 0"	4	12"	22'- 0"	4	12"	23'- 0"	4	12"	2'-11"	5'- 8"	4	12"	2'- 6"	4'- 8"	6'-11"	4	12"	8'- 0"	4	9½"	8'- 0"
6	4	8"	8"	8"	8"	25	25'- 0"	25	25'- 0"	2	2'- 0"	4	12"	25'- 8"	4	12"	27'- 0"	--	---	-----	-----	5	12"	2'- 8⅜"	3'- 2"	5'- 6"	4	12"	5'- 0"	4	9"	5'- 0"
6	5	8"	8"	8"	8"	25	25'- 0"	25	25'- 0"	3	3'- 0"	4	12"	25'- 8"	4	12"	27'- 0"	--	---	-----	-----	5	12"	2'- 8⅜"	3'- 8"	6'- 0"	4	12"	6'- 0"	4	8"	6'- 0"
6	6	8"	8"	8"	8"	25	25'- 0"	25	25'- 0"	4	4'- 0"	4	12"	25'- 8"	4	12"	27'- 0"	--	---	-----	-----	5	12"	2'- 8⅜"	4'- 2"	6'- 6"	4	12"	7'- 0"	4	7½"	7'- 0"
6	7	8"	8"	8"	8"	25	25'- 0"	25	25'- 0"	5	5'- 0"	4	11"	25'- 8"	4	11"	27'- 0"	--	---	-----	-----	5	11"	2'- 8⅜"	4'- 8"	7'- 0"	4	12"	8'- 0"	4	7½"	8'- 0"
6	8	8"	8"	8"	8"	25	25'- 0"	25	25'- 0"	6	6'- 0"	4	11"	25'- 8"	4	11"	27'- 0"	4	11"	3'- 2"	6'- 2"	5	11"	2'- 8⅜"	5'- 2"	7'- 6"	4	12"	9'- 0"	4	7½"	9'- 0"
7	4	8"	8"	8"	8"	29	29'- 0"	29	29'- 0"	2	2'- 0"	4	8"	29'-11"	4	8"	31'- 0"	4	8"	2'-10¾"	5'- 6"	4	8"	2'-10¾"	3'- 2"	5'-10"	4	12"	5'- 0"	4	7"	5'- 0"
7	6	8"	8"	8"	8"	29	29'- 0"	29	29'- 0"	4	4'- 0"	4	8"	29'-11"	4	8"	31'- 0"	4	8"	2'-10¾"	5'- 6"	4	8"	2'-10¾"	4'- 2"	6'-10"	4	12"	7'- 0"	5	9½"	7'- 0"
7	8	8"	8"	8"	8"	29	29'- 0"	29	29'- 0"	6	6'- 0"	4	8"	29'-11"	4	8"	31'- 0"	4	8"	3'- 2"	6'- 2"	4	8"	2'-10¾"	5'- 2"	7'-10"	4	12"	9'- 0"	4	6"	9'- 0"
7	10	8"	8"	8"	8"	29	29'- 0"	29	29'- 0"	8	8'- 0"	4	8"	29'-11"	4	8"	31'- 0"	4	8"	3'- 6"	6'- 9"	4	8"	2'-10¾"	6'- 2"	8'-10"	5	12"	11'- 0"	5	9"	11'- 0"
8	4	8"	8"	8"	8"	33	33'- 0"	33	33'- 0"	2	2'- 0"	5	10"	33'- 8"	5	10"	35'- 0"	4	10"	3'- 1¼"	5'-11"	5	10"	3'- 1¼"	3'- 2"	5'-11"	4	12"	5'- 0"	4	6"	5'- 0"
8	6	8¼"	8¼"	8"	8"	33	33'- 0"	33	33'- 0"	4	4'- 0"	5	11"	33'- 8"	5	11"	35'- 0"	--	---	-----	-----	6	11"	3'- 7"	4'- 6"	7'- 9"	4	12"	7'- 0"	4	5½"	7'- 0"
8	8	8¼"	8¼"	8"	8"	33	33'- 0"	33	33'- 0"	6	6'- 0"	6	11"	33'- 8"	5	11"	35'- 0"	4	11"	3'- 1¼"	5'-11"	6	11"	3'- 7"	5'- 6"	8'- 9"	4	12"	9'- 0"	5	8"	9'- 0"
8	10	8½"	8½"	8"	8"	33	33'- 0"	33	33'- 0"	8	8'- 0"	5	10"	33'- 8"	5	10"	35'- 0"	4	10"	3'- 6"	6'- 9"	5	10"	3'- 1¼"	6'- 2½"	9'- 0"	5	12"	11'- 1"	5	8"	11'- 1"
9	4	8½"	8½"	8"	8"	37	37'- 0"	37	37'- 0"	2	2'- 0"	5	9"	37'- 8"	5	9"	39'- 0"	4	9"	3'- 3⅝"	6'- 4"	5	9"	3'- 3⅝"	3'- 2½"	6'- 2"	4	12"	5'- 1"	4	5½"	5'- 1"
9	6	8½"	8½"	8"	8"	37	37'- 0"	37	37'- 0"	4	4'- 0"	5	9"	37'- 8"	5	9"	39'- 0"	4	9"	3'- 3⅝"	6'- 4"	5	9"	3'- 3⅝"	4'- 2½"	7'- 2"	4	12"	7'- 1"	5	8"	7'- 1"
9	8	8½"	8½"	8"	8"	37	37'- 0"	37	37'- 0"	6	6'- 0"	5	9"	37'- 8"	5	9"	39'- 0"	4	9"	3'- 3⅝"	6'- 4"	5	9"	3'- 3⅝"	5'- 2½"	8'- 2"	4	12"	9'- 1"	5	8"	9'- 1"
9	10	9"	9"	8"	8"	37	37'- 0"	37	37'- 0"	8	8'- 0"	5	9"	37'- 8"	5	9"	39'- 0"	4	9"	3'- 8"	6'-11"	5	9"	3'- 3⅝"	6'- 3"	9'- 3"	5	12"	11'- 2"	4	5½"	11'- 2"
9	12	9"	9"	8"	8"	37	37'- 0"	37	37'- 0"	10	10'- 0"	6	12"	37'- 8"	6	12"	39'- 0"	4	12"	4'- 1"	7'-11"	6	12"	3'-10"	7'- 7"	11'- 0"	5	8"	13'- 2"	5	9"	13'- 2"
10	4	9"	9"	8"	8"	41	41'- 0"	41	41'- 0"	2	2'- 0"	6	12"	41'- 8"	6	12"	43'- 0"	--	---	-----	-----	7	12"	4'- 5"	3'-10"	7'- 9"	4	12"	5'- 2"	4	5"	5'- 2"
10	6	9"	9"	8"	8"	41	41'- 0"	41	41'- 0"	4	4'- 0"	6	12"	41'- 8"	6	12"	43'- 0"	--	---	-----	-----	7	12"	4'- 5"	4'-10"	8'- 9"	4	12"	7'- 2"	5	7½"	7'- 2"
10	8	9¼"	9¼"	8"	8"	41	41'- 0"	41	41'- 0"	6	6'- 0"	5	8"	41'- 8"	5	8"	43'- 0"	4	8"	3'- 6"	6'- 9"	5	8"	3'- 6"	5'- 3¼"	8'- 5"	4	12"	9'- 2"	4	5"	9'- 2"
10	10	9½"	9½"	8"	8"	41	41'- 0"	41	41'- 0"	8	8'- 0"	6	11"	41'- 8"	6	11"	43'- 0"	4	11"	3'- 8"	6'-11"	6	11"	4'- 0"	6'- 7"	10'- 3"	4	8½"	11'- 3"	5	8"	11'- 3"
10	12	9¾"	9¾"	8"	8"	41	41'- 0"	41	41'- 0"	10	10'- 0"	6	11"	41'- 8"	6	11"	43'- 0"	--	---	-----	-----	7	11"	4'- 5"	7'-11"	11'-10"	5	8"	13'- 3"	4	5½"	13'- 3"
12	6	10½"	10½"	8"	8"	49	49'- 0"	49	49'- 0"	4	4'- 0"	6	12"	49'- 8"	6	12"	51'- 0"	--	---	-----	-----	7	12"	4'-10"	5'- 0"	9'- 4"	4	12"	7'- 5"	5	7½"	7'- 5"
12	8	10¼"	10¼"	8"	8"	49	49'- 0"	49	49'- 0"	6	6'- 0"	6	8"	49'- 8"	5	8"	51'- 0"	4	8"	3'-10¾"	7'- 6"	5	8"	3'-10¾"	5'- 4¼"	8'-11"	4	12"	9'- 5"	4	4½"	9'- 5"
12	10	10¼"	10¼"	8"	8"	49	49'- 0"	49	49'- 0"	8	8'- 0"	6	10"	49'- 8"	6	10"	51'- 0"	4	10"	3'-10¾"	7'- 6"	6	10"	4'- 5"	6'- 8"	10'- 8"	4	10"	11'- 5"	5	7½"	11'- 5"
12	12	10"	10"	8"	8"	49	49'- 0"	49	49'- 0"	10	10'- 0"	6	9"	49'- 8"	6	9"	51'- 0"	4	9"	4'- 1"	7'-11"	6	9"	4'- 5"	7'- 8"	11'- 8"	5	9"	13'- 4"	6	9½"	13'- 4"

A COPY OF THE ORIGINAL SEALED AND SIGNED DRAWING IS ON FILE IN THE CENTRAL OFFICE.

VDOT
ROAD AND BRIDGE STANDARDS

SHEET 1 OF 2 | REVISION DATE
1005.07 | 07/11

QUADRUPLE BOX CULVERTS

2 TO 5 FT. FILLS

VIRGINIA DEPARTMENT OF TRANSPORTATION

SPECIFICATION REFERENCE

BCQ-05

FOR TYPICAL SECTION, NOTES AND OTHER DETAILS, REFER TO STANDARD BCQ-DT.

SPAN (FT.)	HGHT (FT.)	REINFORCING STEEL BT1 SIZE	SPACING c-c	a	b	c	d	e	f	g	LENGTH	NO. BL1 #4 BARS	NO. BL2 #3 BARS	REINFORCING STEEL (LBS/LONG. JT)	QUAN./LF CONCRETE CLASS A4 (CY/LF)	REINFORCING STEEL (LBS/LF)	HEADWALLS G HEADWALL LENGTH	HW1 SIZE	HW1 LENGTH	NO. HW2 BARS	NO. HW3 BARS	INLET CONCRETE CL. A4 (CY)	INLET REINFORCING STEEL (LBS)	OUTLET CONCRETE CL. A4 (CY)	OUTLET REINFORCING STEEL (LBS)	WINGWALL
3	3	4	12"	2'- 8 7/8"	0'- 4 1/2"	1'- 6 5/8"	0'- 5 7/8"	0'- 3 3/4"	14'-11 7/8"	1'- 5 7/8"	15'- 9"	60	20	57.160	1.284	141.899	16'-10"	6	16'- 6"	3	12	2.222	137.876	2.191	99.132	A
3	4	4	12"	2'- 8 7/8"	0'- 4 1/2"	1'- 6 5/8"	0'- 5 7/8"	0'- 3 3/4"	14'-11 7/8"	1'- 5 7/8"	15'- 9"	60	30	60.690	1.406	152.339	16'-10"	6	16'- 6"	3	15	2.333	148.230	2.284	99.132	C
4	3	4	12"	3'- 6 1/2"	0'- 4 1/2"	1'-11 1/2"	0'- 5 7/8"	0'- 3 3/4"	19'- 0"	2'- 1"	19'- 9"	76	20	70.520	1.479	168.508	20'-10"	6	20'- 6"	3	12	2.626	161.908	2.609	123.164	A
4	4	4	12"	3'- 6 1/2"	0'- 4 1/2"	1'-11 1/2"	0'- 5 7/8"	0'- 3 3/4"	19'- 0"	2'- 1"	19'- 9"	76	30	74.050	1.601	190.527	20'-10"	6	20'- 6"	3	15	2.738	172.262	2.702	123.164	C
4	5	4	12"	3'- 6 1/2"	0'- 4 1/2"	1'-11 1/2"	0'- 5 7/8"	0'- 3 3/4"	19'- 0"	2'- 1"	19'- 9"	76	40	77.580	1.723	209.164	20'-10"	6	20'- 6"	3	18	2.849	182.616	2.794	123.164	E
4	6	4	12"	3'- 6 1/2"	0'- 4 1/2"	1'-11 1/2"	0'- 5 7/8"	0'- 3 3/4"	19'- 0"	2'- 1"	19'- 9"	76	50	81.110	1.845	223.366	20'-10"	6	20'- 6"	3	21	2.960	192.970	2.887	123.164	G
5	3	4	12"	4'- 4 1/8"	0'- 4 1/2"	2'- 4 1/4"	0'- 5 7/8"	0'- 3 3/4"	23'- 0"	2'- 8 1/4"	23'- 9"	92	20	83.880	1.674	208.031	24'-10"	6	24'- 6"	3	12	3.031	185.940	3.027	147.196	A
5	4	4	12"	4'- 4 1/8"	0'- 4 1/2"	2'- 4 1/4"	0'- 5 7/8"	0'- 3 3/4"	23'- 0"	2'- 8 1/4"	23'- 9"	92	30	87.410	1.796	222.479	24'-10"	6	24'- 6"	3	15	3.142	196.294	3.120	147.196	C
5	5	4	12"	4'- 4 1/8"	0'- 4 1/2"	2'- 4 1/4"	0'- 5 7/8"	0'- 3 3/4"	23'- 0"	2'- 8 1/4"	23'- 9"	92	40	90.940	1.919	233.721	24'-10"	6	24'- 6"	3	18	3.254	206.648	3.212	147.196	E
5	6	4	12"	4'- 4 1/8"	0'- 4 1/2"	2'- 4 1/4"	0'- 5 7/8"	0'- 3 3/4"	23'- 0"	2'- 8 1/4"	23'- 9"	92	50	94.470	2.041	253.896	24'-10"	6	24'- 6"	3	21	3.365	217.002	3.305	147.196	G
5	7	4	12"	4'- 4 1/8"	0'- 4 1/2"	2'- 4 1/4"	0'- 5 7/8"	0'- 3 3/4"	23'- 0"	2'- 8 1/4"	23'- 9"	92	60	98.000	2.163	267.779	24'-10"	6	24'- 6"	3	24	3.476	227.356	3.398	147.196	I
6	4	4	12"	5'- 1 3/4"	0'- 4 1/2"	2'- 9"	0'- 5 7/8"	0'- 3 3/4"	27'- 0"	3'- 3 1/2"	27'- 9"	108	30	100.770	1.991	254.634	28'-10"	6	28'- 6"	3	15	3.547	220.326	3.537	171.228	C
6	5	4	12"	5'- 1 3/4"	0'- 4 1/2"	2'- 9"	0'- 5 7/8"	0'- 3 3/4"	27'- 0"	3'- 3 1/2"	27'- 9"	108	40	104.300	2.113	271.240	28'-10"	6	28'- 6"	3	18	3.658	230.680	3.630	171.228	E
6	6	4	12"	5'- 1 3/4"	0'- 4 1/2"	2'- 9"	0'- 5 7/8"	0'- 3 3/4"	27'- 0"	3'- 3 1/2"	27'- 9"	108	50	107.830	2.236	287.643	28'-10"	6	28'- 6"	3	21	3.770	241.034	3.723	171.228	G
6	7	4	11"	5'- 1 3/4"	0'- 4 1/2"	2'- 9"	0'- 5 7/8"	0'- 3 3/4"	27'- 0"	3'- 3 1/2"	27'- 9"	108	60	111.360	2.357	315.391	28'-10"	6	28'- 6"	3	24	3.881	251.388	3.816	171.228	I
6	8	4	11"	5'- 1 3/4"	0'- 4 1/2"	2'- 9"	0'- 5 7/8"	0'- 3 3/4"	27'- 0"	3'- 3 1/2"	27'- 9"	108	70	114.890	2.478	348.013	28'-10"	6	28'- 6"	3	27	3.992	261.742	3.908	171.228	K
7	4	4	8"	5'-11 3/8"	0'- 4 1/2"	3'- 1 7/8"	0'- 5 7/8"	0'- 3 3/4"	31'- 1/8"	3'-10 5/8"	31'-10"	124	30	114.130	2.179	375.974	32'-10"	6	32'- 6"	3	15	3.952	244.358	3.955	195.260	C
7	6	4	8"	5'-11 3/8"	0'- 4 1/2"	3'- 1 7/8"	0'- 5 7/8"	0'- 3 3/4"	31'- 1/8"	3'-10 5/8"	31'-10"	124	50	121.190	2.424	411.704	32'-10"	6	32'- 6"	3	21	4.174	265.066	4.141	195.260	G
7	8	4	8"	5'-11 3/8"	0'- 4 1/2"	3'- 1 7/8"	0'- 5 7/8"	0'- 3 3/4"	31'- 1/8"	3'-10 5/8"	31'-10"	124	70	128.250	2.668	446.891	32'-10"	6	32'- 6"	3	27	4.397	285.774	4.326	195.260	K
7	10	4	8"	5'-11 3/8"	0'- 4 1/2"	3'- 1 7/8"	0'- 5 7/8"	0'- 3 3/4"	31'- 1/8"	3'-10 5/8"	31'-10"	124	90	135.310	2.912	490.787	32'-10"	6	32'- 6"	3	33	4.620	306.482	4.512	195.260	O
8	4	5	10"	6'- 8 7/8"	0'- 4 5/8"	3'- 6 5/8"	0'- 6"	0'- 3 3/4"	34'-11 7/8"	4'- 5 7/8"	35'- 9"	140	30	127.490	2.370	469.730	36'-10"	6	36'- 6"	3	15	4.356	268.390	4.373	219.292	C
8	6	5	11"	6'- 8 3/4"	0'- 4 7/8"	3'- 6 3/8"	0'- 6 1/4"	0'- 4"	34'-11 7/8"	4'- 5 5/8"	35'- 9"	140	50	134.550	2.670	482.589	36'-10"	6	36'- 6"	3	21	4.557	289.098	4.536	219.292	G
8	8	5	11"	6'- 8 3/4"	0'- 4 7/8"	3'- 6 3/8"	0'- 6 1/4"	0'- 4"	34'-11 7/8"	4'- 5 5/8"	35'- 9"	140	70	141.610	2.910	573.014	36'-10"	6	36'- 6"	3	27	4.779	309.806	4.722	219.292	K
8	10	5	10"	6'- 8 5/8"	0'- 5 1/8"	3'- 6 1/8"	0'- 6 5/8"	0'- 4 1/4"	34'-11 7/8"	4'- 5 3/8"	35'-10"	140	90	148.670	3.210	593.975	36'-10"	6	36'- 6"	3	33	4.980	330.514	4.885	219.292	O
9	4	5	9"	7'- 6 1/4"	0'- 5 1/8"	3'-11"	0'- 6 5/8"	0'- 4 1/4"	39'- 0"	5'- 1/2"	39'-10"	156	30	140.850	2.683	551.081	40'-10"	6	40'- 6"	3	15	4.710	292.422	4.740	243.324	C
9	6	5	9"	7'- 6 1/4"	0'- 5 1/8"	3'-11"	0'- 6 5/8"	0'- 4 1/4"	39'- 0"	5'- 1/2"	39'-10"	156	50	147.910	2.927	589.585	40'-10"	6	40'- 6"	3	21	4.933	313.130	4.926	243.324	G
9	8	5	9"	7'- 6 1/4"	0'- 5 1/8"	3'-11"	0'- 6 5/8"	0'- 4 1/4"	39'- 0"	5'- 1/2"	39'-10"	156	70	154.970	3.171	624.975	40'-10"	6	40'- 6"	3	27	5.156	333.838	5.111	243.324	K
9	10	5	9"	7'- 6"	0'- 5 5/8"	3'-10 1/2"	0'- 7 3/8"	0'- 4 3/4"	39'- 0"	5'- 0"	40'- 0"	156	90	162.030	3.536	665.872	40'-10"	6	40'- 6"	3	33	5.327	354.546	5.246	243.324	O
9	12	6	12"	7'- 6"	0'- 5 3/4"	3'-10 1/2"	0'- 7 1/2"	0'- 4 3/4"	39'- 0"	5'- 0"	39'-11"	156	110	169.090	3.777	741.709	40'-10"	6	40'- 6"	3	39	5.550	375.254	5.431	243.324	S
10	4	6	12"	8'- 3 5/8"	0'- 5 3/4"	4'- 3 1/4"	0'- 7 1/2"	0'- 4 3/4"	43'- 0"	5'- 7 1/4"	43'-11"	172	30	154.210	3.020	638.478	44'-10"	6	44'- 6"	3	15	5.052	316.454	5.095	267.356	C
10	6	6	12"	8'- 3 5/8"	0'- 5 3/4"	4'- 3 1/4"	0'- 7 1/2"	0'- 4 3/4"	43'- 0"	5'- 7 1/4"	43'-11"	172	50	161.270	3.263	679.789	44'-10"	6	44'- 6"	3	21	5.274	337.162	5.280	267.356	G
10	8	5	8"	8'- 3 1/2"	0'- 5 7/8"	4'- 3"	0'- 7 3/4"	0'- 5"	43'- 0"	5'- 7"	44'- 0"	172	70	168.330	3.572	743.548	44'-10"	6	44'- 6"	3	27	5.487	357.870	5.456	267.356	L
10	10	6	11"	8'- 3 3/8"	0'- 6 1/4"	4'- 2 3/4"	0'- 8 1/8"	0'- 5 1/4"	43'- 0"	5'- 6 3/4"	44'- 0"	172	90	175.390	3.882	793.552	44'-10"	6	44'- 6"	3	33	5.681	378.578	5.613	267.356	P
10	12	6	11"	8'- 3 1/4"	0'- 6 1/2"	4'- 2 1/2"	0'- 8 1/2"	0'- 5 1/2"	43'- 0"	5'- 6 1/2"	44'- 1"	172	110	182.450	4.192	850.755	44'-10"	6	44'- 6"	3	39	5.875	399.286	5.770	267.356	T
12	6	6	12"	9'-10 1/8"	0'- 7 1/4"	4'-11 3/8"	0'- 9 5/8"	0'- 6 1/4"	51'- 1/8"	6'- 8 1/8"	52'- 3"	204	50	187.990	4.175	782.755	52'-10"	6	52'- 6"	3	21	5.869	385.226	5.902	315.420	H
12	8	5	8"	9'-10 1/4"	0'- 6 7/8"	4'-11 5/8"	0'- 9 1/8"	0'- 6"	51'- 1/8"	6'- 8 3/8"	52'- 3"	204	70	195.050	4.332	932.213	52'-10"	6	52'- 6"	3	27	6.127	405.934	6.122	315.420	L
12	10	6	10"	9'-10 1/4"	0'- 7"	4'-11 5/8"	0'- 9 1/4"	0'- 6"	51'- 1/8"	6'- 8 3/8"	52'- 3"	204	90	202.110	4.576	966.832	52'-10"	6	52'- 6"	3	33	6.349	426.642	6.308	315.420	P
12	12	6	9"	9'-10 3/8"	0'- 6 3/4"	4'-11 7/8"	0'- 8 7/8"	0'- 5 3/4"	51'- 1/8"	6'- 8 5/8"	52'- 2"	204	110	209.170	4.733	1112.599	52'-10"	6	52'- 6"	3	39	6.607	447.350	6.528	315.420	T

A COPY OF THE ORIGINAL SEALED AND SIGNED DRAWING IS ON FILE IN THE CENTRAL OFFICE.

SPECIFICATION REFERENCE

QUADRUPLE BOX CULVERTS

2 TO 5 FT. FILLS

VIRGINIA DEPARTMENT OF TRANSPORTATION

VDOT

ROAD AND BRIDGE STANDARDS

REVISION DATE 08/14

SHEET 2 OF 2

1005.08

BCQ-10

FOR TYPICAL SECTION, NOTES AND OTHER DETAILS, REFER TO STANDARD BCQ-DT.

DIMENSIONS						REINFORCING STEEL																										
SPAN	HGHT	T1	T2	T3	T4							BH1			BH2			BH3				BH4					BV1			BV2		
(FT.)	(FT.)	TOP SLAB	BOTTOM SLAB	EXTERIOR WALL (IN.)	INTERIOR WALL (IN.)	A	B	C	D	E	F	SIZE	SPACING C-C	LENGTH	SIZE	SPACING C-C	LENGTH	SIZE	SPACING C-C	a	LENGTH	SIZE	SPACING C-C	a	b	LENGTH	SIZE	SPACING C-C	LENGTH	SIZE	SPACING C-C	LENGTH
3	3	8"	8"	8"	8"	13	13'- 0"	13	13'- 0"	1	1'- 0"	4	12"	14'-10"	4	12"	15'- 0"	--	---	-----	-----	4	12"	2'- 1¼"	2'- 8"	4'- 6"	4	12"	4'- 0"	4	12"	4'- 0"
3	4	8"	8"	8"	8"	13	13'- 0"	13	13'- 0"	2	2'- 0"	4	12"	14'-10"	4	12"	15'- 0"	--	---	-----	-----	4	12"	2'- 1¼"	3'- 2"	5'- 0"	4	12"	5'- 0"	4	12"	5'- 0"
4	3	8"	8"	8"	8"	17	17'- 0"	17	17'- 0"	1	1'- 0"	4	12"	18'- 5"	4	12"	19'- 0"	--	---	-----	-----	4	12"	2'- 3⅝"	2'- 8"	4'- 8"	4	12"	4'- 0"	4	12"	4'- 0"
4	4	8"	8"	8"	8"	17	17'- 0"	17	17'- 0"	2	2'- 0"	4	12"	18'- 5"	4	12"	19'- 0"	--	---	-----	-----	4	12"	2'- 3⅝"	3'- 2"	5'- 2"	4	12"	5'- 0"	4	12"	5'- 0"
4	5	8"	8"	8"	8"	17	17'- 0"	17	17'- 0"	3	3'- 0"	4	12"	18'- 5"	4	12"	19'- 0"	--	---	-----	-----	4	12"	2'- 3⅝"	3'- 8"	5'- 8"	4	12"	6'- 0"	4	12"	6'- 0"
4	6	8"	8"	8"	8"	17	17'- 0"	17	17'- 0"	4	4'- 0"	4	12"	18'- 5"	4	12"	19'- 0"	--	---	-----	-----	4	12"	2'- 3⅝"	4'- 2"	6'- 2"	4	12"	7'- 0"	4	12"	7'- 0"
5	3	8"	8"	8"	8"	21	21'- 0"	21	21'- 0"	1	1'- 0"	4	12"	22'- 0"	4	12"	23'- 0"	--	---	-----	-----	4	12"	2'- 6"	2'- 8"	4'-11"	4	12"	4'- 0"	4	12"	4'- 0"
5	4	8"	8"	8"	8"	21	21'- 0"	21	21'- 0"	2	2'- 0"	4	12"	22'- 0"	4	12"	23'- 0"	--	---	-----	-----	4	12"	2'- 6"	3'- 2"	5'- 5"	4	12"	5'- 0"	4	12"	5'- 0"
5	5	8"	8"	8"	8"	21	21'- 0"	21	21'- 0"	3	3'- 0"	4	12"	22'- 0"	4	12"	23'- 0"	--	---	-----	-----	4	12"	2'- 6"	3'- 8"	5'-11"	4	12"	6'- 0"	4	12"	6'- 0"
5	6	8"	8"	8"	8"	21	21'- 0"	21	21'- 0"	4	4'- 0"	4	12"	22'- 0"	4	12"	23'- 0"	--	---	-----	-----	4	12"	2'- 6"	4'- 2"	6'- 5"	4	12"	7'- 0"	4	12"	7'- 0"
5	7	8"	8"	8"	8"	21	21'- 0"	21	21'- 0"	5	5'- 0"	4	12"	22'- 0"	4	12"	23'- 0"	--	---	-----	-----	4	12"	2'- 6"	4'- 8"	6'-11"	4	12"	8'- 0"	4	12"	8'- 0"
6	4	8"	8"	8"	8"	25	25'- 0"	25	25'- 0"	2	2'- 0"	4	12"	25'-11"	4	12"	27'- 0"	4	12"	2'- 8⅜"	5'- 2"	4	12"	2'- 8⅜"	3'- 2"	5'- 7"	4	12"	5'- 0"	4	12"	5'- 0"
6	5	8"	8"	8"	8"	25	25'- 0"	25	25'- 0"	3	3'- 0"	4	12"	25'-11"	4	12"	27'- 0"	4	12"	2'- 8⅜"	5'- 2"	4	12"	2'- 8⅜"	3'- 8"	6'- 1"	4	12"	6'- 0"	4	12"	6'- 0"
6	6	8"	8"	8"	8"	25	25'- 0"	25	25'- 0"	4	4'- 0"	4	12"	25'-11"	4	12"	27'- 0"	4	12"	2'- 8⅜"	5'- 2"	4	12"	2'- 8⅜"	4'- 2"	6'- 7"	4	12"	7'- 0"	4	12"	7'- 0"
6	7	8"	8"	8"	8"	25	25'- 0"	25	25'- 0"	5	5'- 0"	4	12"	25'-11"	4	12"	27'- 0"	4	12"	2'-11"	5'- 8"	4	12"	2'- 8⅜"	4'- 8"	7'- 1"	4	12"	8'- 0"	4	12"	8'- 0"
6	8	8"	8"	8"	8"	25	25'- 0"	25	25'- 0"	6	6'- 0"	4	12"	25'-11"	4	12"	27'- 0"	4	12"	3'- 2"	6'- 2"	4	12"	2'- 8⅜"	5'- 2"	7'- 7"	4	12"	9'- 0"	4	12"	9'- 0"
7	4	8"	8"	8"	8"	29	29'- 0"	29	29'- 0"	2	2'- 0"	4	12"	29'- 8"	4	12"	31'- 0"	--	---	-----	-----	5	12"	2'-10¾"	3'- 2"	5'- 9"	4	12"	5'- 0"	4	12"	5'- 0"
7	6	8"	8"	8"	8"	29	29'- 0"	29	29'- 0"	4	4'- 0"	4	12"	29'- 8"	4	12"	31'- 0"	--	---	-----	-----	5	12"	2'-10¾"	4'- 2"	6'- 9"	4	12"	7'- 0"	4	12"	7'- 0"
7	8	8"	8"	8"	8"	29	29'- 0"	29	29'- 0"	6	6'- 0"	4	12"	29'- 8"	4	12"	31'- 0"	--	---	-----	-----	5	12"	2'-10¾"	5'- 2"	7'- 9"	4	12"	9'- 0"	4	11½"	9'- 0"
7	10	8"	8"	8"	8"	29	29'- 0"	29	29'- 0"	8	8'- 0"	4	11"	29'- 8"	4	11"	31'- 0"	--	---	-----	-----	5	11"	2'-10¾"	6'- 2"	8'- 9"	5	10"	11'- 0"	4	12"	11'- 0"
8	4	8¼"	8¼"	8"	8"	33	33'- 0"	33	33'- 0"	2	2'- 0"	4	11"	33'- 8"	4	11"	35'- 0"	3	11"	3'- 1¼"	6'- 0"	5	11"	3'- 1¼"	3'- 2¼"	6'- 0"	4	9"	5'- 0"	4	12"	5'- 0"
8	6	8½"	8½"	8"	8"	33	33'- 0"	33	33'- 0"	4	4'- 0"	4	11"	33'- 8"	4	11"	35'- 0"	--	---	-----	-----	5	11"	3'- 1¼"	4'- 2½"	7'- 0"	4	12"	7'- 1"	4	12"	7'- 1"
8	8	8½"	8½"	8"	8"	33	33'- 0"	33	33'- 0"	6	6'- 0"	4	10"	33'- 8"	4	10"	35'- 0"	--	---	-----	-----	5	10"	3'- 1¼"	5'- 2½"	8'- 0"	4	12"	9'- 1"	4	12"	9'- 1"
8	10	8¾"	8¾"	8"	8"	33	33'- 0"	33	33'- 0"	8	8'- 0"	4	9"	33'- 8"	4	9"	35'- 0"	--	---	-----	-----	5	9"	3'- 1¼"	6'- 2¾"	9'- 0"	5	11"	11'- 2"	4	12"	11'- 2"
9	4	9"	9"	8"	8"	37	37'- 0"	37	37'- 0"	2	2'- 0"	5	9"	37'-11"	4	9"	39'- 0"	3	9"	3'- 3⅝"	6'- 5"	5	9"	3'- 3⅝"	3'- 3"	6'- 3"	4	8"	5'- 2"	4	12"	5'- 2"
9	6	9¼"	9¼"	8"	8"	37	37'- 0"	37	37'- 0"	4	4'- 0"	5	9"	37'-11"	4	9"	39'- 0"	--	---	-----	-----	5	9"	3'- 3⅝"	4'- 3¼"	7'- 3"	4	12"	7'- 2"	4	12"	7'- 2"
9	8	9½"	9½"	8"	8"	37	37'- 0"	37	37'- 0"	6	6'- 0"	5	9"	37'-11"	4	9"	39'- 0"	4	9"	3'- 3⅝"	6'- 4"	4	9"	3'- 3⅝"	5'- 3½"	8'- 4"	4	12"	9'- 3"	4	12"	9'- 3"
9	10	9½"	9½"	8"	8"	37	37'- 0"	37	37'- 0"	8	8'- 0"	5	9"	37'-11"	5	9"	39'- 0"	--	---	-----	-----	5	9"	3'- 3⅝"	6'- 3½"	9'- 3"	5	12"	11'- 3"	4	12"	11'- 3"
9	12	9¾"	9¾"	8"	8"	37	37'- 0"	37	37'- 0"	10	10'- 0"	4	8"	37'-11"	4	8"	39'- 0"	4	8"	4'- 1"	7'-11"	5	8"	3'- 3⅝"	7'- 3¾"	10'- 3"	5	6"	13'- 3"	4	12"	13'- 3"
10	4	9¾"	9¾"	8"	8"	41	41'- 0"	41	41'- 0"	2	2'- 0"	5	8"	41'-11"	4	8"	43'- 0"	--	---	-----	-----	5	8"	3'- 6"	3'- 3¾"	6'- 6"	4	7"	5'- 3"	4	12"	5'- 3"
10	6	10"	10"	8"	8"	41	41'- 0"	41	41'- 0"	4	4'- 0"	5	8"	41'-11"	4	8"	43'- 0"	--	---	-----	-----	5	8"	3'- 6"	4'- 4"	7'- 6"	4	11½"	7'- 4"	4	12"	7'- 4"
10	8	10¼"	10¼"	8"	8"	41	41'- 0"	41	41'- 0"	6	6'- 0"	5	8"	41'-11"	4	8"	43'- 0"	4	8"	3'- 6"	6'- 9"	4	8"	3'- 6"	5'- 4¼"	8'- 7"	4	12"	9'- 5"	4	12"	9'- 5"
10	10	10¼"	10¼"	8"	8"	41	41'- 0"	41	41'- 0"	8	8'- 0"	5	8"	41'-11"	5	8"	43'- 0"	--	---	-----	-----	5	8"	3'- 6"	6'- 4¼"	9'- 6"	5	12"	11'- 5"	4	12"	11'- 5"
10	12	10½"	10½"	8"	8"	41	41'- 0"	41	41'- 0"	10	10'- 0"	5	10"	41'-11"	5	10"	43'- 0"	3	10"	4'- 1"	7'-11"	6	10"	4'- 0"	7'- 8"	11'- 4"	5	7"	13'- 5"	4	12"	13'- 5"
12	6	11¾"	11¾"	8"	8"	49	49'- 0"	49	49'- 0"	4	4'- 0"	6	12"	49'- 8"	6	12"	51'- 0"	3	12"	3'-10¾"	7'- 7"	6	12"	4'- 5"	4'- 9"	8'-10"	4	10"	7'- 8"	4	10"	7'- 8"
12	8	11¾"	11¾"	8"	8"	49	49'- 0"	49	49'- 0"	6	6'- 0"	6	11"	49'- 8"	6	11"	51'- 0"	--	---	-----	-----	6	11"	4'- 5"	5'- 9"	9'-10"	4	12"	9'- 8"	4	12"	9'- 8"
12	10	12"	12"	8"	8"	49	49'- 0"	49	49'- 0"	8	8'- 0"	6	9"	49'- 8"	5	9"	51'- 0"	3	9"	3'-10¾"	7'- 7"	5	9"	3'-10¾"	6'- 6"	10'- 1"	5	12"	11'- 8"	4	12"	11'- 8"
12	12	12¼"	12¼"	8"	8"	49	49'- 0"	49	49'- 0"	10	10'- 0"	6	9"	49'- 8"	5	9"	51'- 0"	--	---	-----	-----	6	9"	4'- 5"	7'-10"	11'-10"	6	10½"	13'- 9"	4	12"	13'- 9"

A COPY OF THE ORIGINAL SEALED AND SIGNED DRAWING IS ON FILE IN THE CENTRAL OFFICE.

VDOT
ROAD AND BRIDGE STANDARDS

SHEET 1 OF 2 | REVISION DATE
1005.09 | 07/11

QUADRUPLE BOX CULVERTS

5 TO 10 FT. FILLS

VIRGINIA DEPARTMENT OF TRANSPORTATION

SPECIFICATION REFERENCE

BCQ-10

FOR TYPICAL SECTION, NOTES AND OTHER DETAILS, REFER TO STANDARD BCQ-DT.

SPAN (FT.)	HGHT (FT.)	REINFORCING STEEL BT1 SIZE	SPACING c-c	a	b	c	d	e	f	g	LENGTH	NO. BL1 #4 BARS	NO. BL2 #3 BARS	REINFORCING STEEL (LBS/LONG. JT)	QUAN./LF CONCRETE CLASS A4 (CY/LF)	REINFORCING STEEL (LBS/LF)	HEADWALLS G HEADWALL LENGTH	HW1 SIZE	HW1 LENGTH	NO. HW2 BARS	NO. HW3 BARS	INLET CONCRETE CL. A4 (CY)	INLET REINFORCING STEEL (LBS)	OUTLET CONCRETE CL. A4 (CY)	OUTLET REINFORCING STEEL (LBS)	WINGWALL
3	3	4	12"	2'- 8 7/8"	0'- 4 1/2"	1'- 6 5/8"	0'- 5 7/8"	0'- 3 3/4"	14'-11 7/8"	1'- 5 7/8"	15'- 9"	60	20	57.160	1.284	141.899	16'-10"	6	16'- 6"	3	12	2.222	137.876	2.191	99.132	A
3	4	4	12"	2'- 8 7/8"	0'- 4 1/2"	1'- 6 5/8"	0'- 5 7/8"	0'- 3 3/4"	14'-11 7/8"	1'- 5 7/8"	15'- 9"	60	30	60.690	1.406	152.339	16'-10"	6	16'- 6"	3	15	2.333	148.230	2.284	99.132	C
4	3	4	12"	3'- 6 1/2"	0'- 4 1/2"	1'-11 1/2"	0'- 5 7/8"	0'- 3 3/4"	19'- 0"	2'- 1"	19'- 9"	76	20	70.520	1.479	168.508	20'-10"	6	20'- 6"	3	12	2.626	161.908	2.609	123.164	A
4	4	4	12"	3'- 6 1/2"	0'- 4 1/2"	1'-11 1/2"	0'- 5 7/8"	0'- 3 3/4"	19'- 0"	2'- 1"	19'- 9"	76	30	74.050	1.602	178.948	20'-10"	6	20'- 6"	3	15	2.738	172.262	2.702	123.164	C
4	5	4	12"	3'- 6 1/2"	0'- 4 1/2"	1'-11 1/2"	0'- 5 7/8"	0'- 3 3/4"	19'- 0"	2'- 1"	19'- 9"	76	40	77.580	1.724	189.388	20'-10"	6	20'- 6"	3	18	2.849	182.616	2.794	123.164	E
4	6	4	12"	3'- 6 1/2"	0'- 4 1/2"	1'-11 1/2"	0'- 5 7/8"	0'- 3 3/4"	19'- 0"	2'- 1"	19'- 9"	76	50	81.110	1.847	199.828	20'-10"	6	20'- 6"	3	21	2.960	192.970	2.887	123.164	G
5	3	4	12"	4'- 4 1/8"	0'- 4 1/2"	2'- 4 1/4"	0'- 5 7/8"	0'- 3 3/4"	23'- 0"	2'- 8 1/4"	23'- 9"	92	20	83.880	1.675	195.339	24'-10"	6	24'- 6"	3	12	3.031	185.940	3.027	147.196	A
5	4	4	12"	4'- 4 1/8"	0'- 4 1/2"	2'- 4 1/4"	0'- 5 7/8"	0'- 3 3/4"	23'- 0"	2'- 8 1/4"	23'- 9"	92	30	87.410	1.797	205.779	24'-10"	6	24'- 6"	3	15	3.142	196.294	3.120	147.196	C
5	5	4	12"	4'- 4 1/8"	0'- 4 1/2"	2'- 4 1/4"	0'- 5 7/8"	0'- 3 3/4"	23'- 0"	2'- 8 1/4"	23'- 9"	92	40	90.940	1.920	216.219	24'-10"	6	24'- 6"	3	18	3.254	206.648	3.212	147.196	E
5	6	4	12"	4'- 4 1/8"	0'- 4 1/2"	2'- 4 1/4"	0'- 5 7/8"	0'- 3 3/4"	23'- 0"	2'- 8 1/4"	23'- 9"	92	50	94.470	2.043	226.659	24'-10"	6	24'- 6"	3	21	3.365	217.002	3.305	147.196	G
5	7	4	12"	4'- 4 1/8"	0'- 4 1/2"	2'- 4 1/4"	0'- 5 7/8"	0'- 3 3/4"	23'- 0"	2'- 8 1/4"	23'- 9"	92	60	98.000	2.165	237.099	24'-10"	6	24'- 6"	3	24	3.476	227.356	3.398	147.196	I
6	4	4	12"	5'- 1 3/4"	0'- 4 1/2"	2'- 9"	0'- 5 7/8"	0'- 3 3/4"	27'- 0"	3'- 3 1/2"	27'- 9"	108	30	100.770	1.991	253.889	28'-10"	6	28'- 6"	3	15	3.547	220.326	3.537	171.228	C
6	5	4	12"	5'- 1 3/4"	0'- 4 1/2"	2'- 9"	0'- 5 7/8"	0'- 3 3/4"	27'- 0"	3'- 3 1/2"	27'- 9"	108	40	104.300	2.114	264.643	28'-10"	6	28'- 6"	3	18	3.658	230.680	3.630	171.228	E
6	6	4	12"	5'- 1 3/4"	0'- 4 1/2"	2'- 9"	0'- 5 7/8"	0'- 3 3/4"	27'- 0"	3'- 3 1/2"	27'- 9"	108	50	107.830	2.236	275.397	28'-10"	6	28'- 6"	3	21	3.770	241.034	3.723	171.228	G
6	7	4	12"	5'- 1 3/4"	0'- 4 1/2"	2'- 9"	0'- 5 7/8"	0'- 3 3/4"	27'- 0"	3'- 3 1/2"	27'- 9"	108	60	111.360	2.359	287.512	28'-10"	6	28'- 6"	3	24	3.881	251.388	3.816	171.228	I
6	8	4	12"	5'- 1 3/4"	0'- 4 1/2"	2'- 9"	0'- 5 7/8"	0'- 3 3/4"	27'- 0"	3'- 3 1/2"	27'- 9"	108	70	114.890	2.482	299.627	28'-10"	6	28'- 6"	3	27	3.992	261.742	3.908	171.228	K
7	4	4	12"	5'-11 3/8"	0'- 4 1/2"	3'- 1 7/8"	0'- 5 7/8"	0'- 3 3/4"	31'- 1/8"	3'-10 5/8"	31'-10"	124	30	114.130	2.187	276.214	32'-10"	6	32'- 6"	3	15	3.952	244.358	3.955	195.260	C
7	6	4	12"	5'-11 3/8"	0'- 4 1/2"	3'- 1 7/8"	0'- 5 7/8"	0'- 3 3/4"	31'- 1/8"	3'-10 5/8"	31'-10"	124	50	121.190	2.432	299.219	32'-10"	6	32'- 6"	3	21	4.174	265.066	4.141	195.260	G
7	8	4	12"	5'-11 3/8"	0'- 4 1/2"	3'- 1 7/8"	0'- 5 7/8"	0'- 3 3/4"	31'- 1/8"	3'-10 5/8"	31'-10"	124	70	128.250	2.677	324.059	32'-10"	6	32'- 6"	3	27	4.397	285.774	4.326	195.260	K
7	10	4	11"	5'-11 3/8"	0'- 4 1/2"	3'- 1 7/8"	0'- 5 7/8"	0'- 3 3/4"	31'- 1/8"	3'-10 5/8"	31'-10"	124	90	135.310	2.920	374.109	32'-10"	6	32'- 6"	3	33	4.620	306.482	4.512	195.260	O
8	4	4	11"	6'- 8 3/4"	0'- 4 3/4"	3'- 6 3/8"	0'- 6 1/4"	0'- 4"	34'-11 7/8"	4'- 5 5/8"	35'-10"	140	30	127.490	2.435	333.672	36'-10"	6	36'- 6"	3	15	4.334	268.390	4.351	219.292	C
8	6	4	11"	6'- 8 5/8"	0'- 5"	3'- 6 1/8"	0'- 6 1/2"	0'- 4 1/4"	34'-11 7/8"	4'- 5 3/8"	35'-10"	140	50	134.550	2.735	345.357	36'-10"	6	36'- 6"	3	21	4.534	289.098	4.514	219.292	G
8	8	4	10"	6'- 8 5/8"	0'- 5"	3'- 6 1/8"	0'- 6 1/2"	0'- 4 1/4"	34'-11 7/8"	4'- 5 3/8"	35'-10"	140	70	141.610	2.979	386.268	36'-10"	6	36'- 6"	3	27	4.757	309.806	4.700	219.292	K
8	10	4	9"	6'- 8 1/2"	0'- 5 1/4"	3'- 5 7/8"	0'- 6 7/8"	0'- 4 1/2"	34'-11 7/8"	4'- 5 1/8"	35'-11"	140	90	148.670	3.276	447.410	36'-10"	6	36'- 6"	3	33	4.957	330.514	4.863	219.292	O
9	4	4	9"	7'- 6"	0'- 5 1/2"	3'-10 1/2"	0'- 7 1/4"	0'- 4 3/4"	39'- 0"	5'- 0"	40'- 0"	156	30	140.850	2.812	451.848	40'-10"	6	40'- 6"	3	15	4.659	292.422	4.689	243.324	C
9	6	4	9"	7'- 5 7/8"	0'- 5 3/4"	3'-10 1/4"	0'- 7 5/8"	0'- 5"	39'- 0"	4'-11 3/4"	40'- 0"	156	50	147.910	3.119	459.598	40'-10"	6	40'- 6"	3	21	4.875	313.130	4.868	243.324	H
9	8	4	9"	7'- 5 3/4"	0'- 6"	3'-10"	0'- 8"	0'- 5 1/4"	39'- 0"	4'-11 1/2"	40'- 1"	156	70	154.970	3.424	492.432	40'-10"	6	40'- 6"	3	27	5.072	333.838	5.028	243.324	L
9	10	4	9"	7'- 5 3/4"	0'- 6"	3'-10"	0'- 8"	0'- 5 1/4"	39'- 0"	4'-11 1/2"	40'- 1"	156	90	162.030	3.666	554.516	40'-10"	6	40'- 6"	3	33	5.295	354.546	5.213	243.324	P
9	12	4	8"	7'- 5 5/8"	0'- 6 1/4"	3'- 9 3/4"	0'- 8 3/8"	0'- 5 1/2"	39'- 0"	4'-11 1/4"	40'- 2"	156	110	169.090	3.970	599.804	40'-10"	6	40'- 6"	3	39	5.492	375.254	5.373	243.324	T
10	4	4	8"	8'- 3 1/4"	0'- 6 1/4"	4'- 2 1/2"	0'- 8 3/8"	0'- 5 1/2"	43'- 0"	5'- 6 1/2"	44'- 2"	172	30	154.210	3.229	519.693	44'-10"	6	44'- 6"	3	15	4.985	316.454	5.028	267.356	D
10	6	4	8"	8'- 3 1/8"	0'- 6 1/2"	4'- 2 1/4"	0'- 8 5/8"	0'- 5 3/4"	43'- 0"	5'- 6 1/4"	44'- 2"	172	50	161.270	3.541	540.827	44'-10"	6	44'- 6"	3	21	5.179	337.162	5.185	267.356	H
10	8	4	8"	8'- 3"	0'- 6 3/4"	4'- 2"	0'- 9"	0'- 6"	43'- 0"	5'- 6"	44'- 3"	172	70	168.330	3.853	574.370	44'-10"	6	44'- 6"	3	27	5.373	357.870	5.342	267.356	L
10	10	4	8"	8'- 3"	0'- 6 3/4"	4'- 2"	0'- 9"	0'- 6"	43'- 0"	5'- 6"	44'- 3"	172	90	175.390	4.094	649.612	44'-10"	6	44'- 6"	3	33	5.595	378.578	5.527	267.356	P
10	12	5	10"	8'- 2 7/8"	0'- 7 1/8"	4'- 1 3/4"	0'- 9 1/2"	0'- 6 1/4"	43'- 0"	5'- 5 3/4"	44'- 3"	172	110	182.450	4.405	688.264	44'-10"	6	44'- 6"	3	39	5.790	399.286	5.684	267.356	T
12	6	6	12"	9'- 9 1/2"	0'- 8 1/2"	4'-10 1/8"	0'-11 3/8"	0'- 7 1/2"	51'- 1/8"	6'- 6 7/8"	52'- 6"	204	50	187.990	4.575	735.821	52'-10"	6	52'- 6"	3	21	5.696	385.226	5.728	315.420	H
12	8	6	11"	9'- 9 1/2"	0'- 8 1/2"	4'-10 1/8"	0'-11 3/8"	0'- 7 1/2"	51'- 1/8"	6'- 6 7/8"	52'- 6"	204	70	195.050	4.818	787.944	52'-10"	6	52'- 6"	3	27	5.918	405.934	5.914	315.420	L
12	10	5	9"	9'- 9 3/8"	0'- 8 5/8"	4'- 9 7/8"	0'-11 5/8"	0'- 7 3/4"	51'- 1/8"	6'- 6 5/8"	52'- 7"	204	90	202.110	5.142	811.072	52'-10"	6	52'- 6"	3	33	6.106	426.642	6.065	315.420	P
12	12	5	9"	9'- 9 1/4"	0'- 8 7/8"	4'- 9 5/8"	1'- 0"	0'- 8"	51'- 1/8"	6'- 6 3/8"	52'- 8"	204	110	209.170	5.464	873.156	52'-10"	6	52'- 6"	3	39	6.294	447.350	6.215	315.420	T

A COPY OF THE ORIGINAL SEALED AND SIGNED DRAWING IS ON FILE IN THE CENTRAL OFFICE.

SPECIFICATION REFERENCE

QUADRUPLE BOX CULVERTS

5 TO 10 FT. FILLS

VIRGINIA DEPARTMENT OF TRANSPORTATION

VDOT

ROAD AND BRIDGE STANDARDS

REVISION DATE 07/13

SHEET 2 OF 2

1005.10

BCQ-20

FOR TYPICAL SECTION, NOTES AND OTHER DETAILS, REFER TO STANDARD BCQ-DT.

DIMENSIONS						REINFORCING STEEL																										
SPAN	HGHT	T1	T2	T3	T4							BH1			BH2			BH3				BH4					BV1			BV2		
(FT.)	(FT.)	TOP SLAB	BOTTOM SLAB	EXTERIOR WALL (IN.)	INTERIOR WALL (IN.)	A	B	C	D	E	F	SIZE	SPACING C-C	LENGTH	SIZE	SPACING C-C	LENGTH	SIZE	SPACING C-C	a	LENGTH	SIZE	SPACING C-C	a	b	LENGTH	SIZE	SPACING C-C	LENGTH	SIZE	SPACING C-C	LENGTH
3	3	8"	8"	8"	8"	13	13'- 0"	13	13'- 0"	1	1'- 0"	4	12"	13'- 11"	4	12"	15'- 0"	--	---	-----	-----	4	12"	2'- 4"	2'- 8"	4'- 9"	4	12"	4'- 0"	4	12"	4'- 0"
3	4	8"	8"	8"	8"	13	13'- 0"	13	13'- 0"	2	2'- 0"	4	12"	13'- 11"	4	12"	15'- 0"	--	---	-----	-----	4	12"	2'- 4"	3'- 2"	5'- 3"	4	12"	5'- 0"	4	12"	5'- 0"
4	3	8"	8"	8"	8"	17	17'- 0"	17	17'- 0"	1	1'- 0"	4	12"	17'- 11"	4	12"	19'- 0"	--	---	-----	-----	4	12"	2'- 4"	2'- 8"	4'- 9"	4	12"	4'- 0"	4	12"	4'- 0"
4	4	8"	8"	8"	8"	17	17'- 0"	17	17'- 0"	2	2'- 0"	4	12"	17'- 11"	4	12"	19'- 0"	--	---	-----	-----	4	12"	2'- 4"	3'- 2"	5'- 3"	4	12"	5'- 0"	4	12"	5'- 0"
4	5	8"	8"	8"	8"	17	17'- 0"	17	17'- 0"	3	3'- 0"	4	12"	17'- 11"	4	12"	19'- 0"	--	---	-----	-----	4	12"	2'- 4"	3'- 8"	5'- 9"	4	12"	6'- 0"	4	12"	6'- 0"
4	6	8"	8"	8"	8"	17	17'- 0"	17	17'- 0"	4	4'- 0"	4	12"	17'- 11"	4	12"	19'- 0"	--	---	-----	-----	4	12"	2'- 4"	4'- 2"	6'- 3"	4	12"	7'- 0"	4	12"	7'- 0"
5	3	8"	8"	8"	8"	21	21'- 0"	21	21'- 0"	1	1'- 0"	4	12"	21'- 11"	4	12"	23'- 0"	4	12"	2'- 6"	4'- 9"	4	12"	2'- 4"	2'- 8"	4'- 9"	4	12"	4'- 0"	4	12"	4'- 0"
5	4	8"	8"	8"	8"	21	21'- 0"	21	21'- 0"	2	2'- 0"	4	12"	21'- 11"	4	12"	23'- 0"	4	12"	2'- 6"	4'- 9"	4	12"	2'- 4"	3'- 2"	5'- 3"	4	12"	5'- 0"	4	12"	5'- 0"
5	5	8"	8"	8"	8"	21	21'- 0"	21	21'- 0"	3	3'- 0"	4	12"	21'- 11"	4	12"	23'- 0"	3	12"	2'- 6"	4'- 10"	4	12"	2'- 4"	3'- 8"	5'- 9"	4	12"	6'- 0"	4	12"	6'- 0"
5	6	8"	8"	8"	8"	21	21'- 0"	21	21'- 0"	4	4'- 0"	4	12"	21'- 11"	4	12"	23'- 0"	3	12"	2'- 9"	5'- 3"	4	12"	2'- 4"	4'- 2"	6'- 3"	4	12"	7'- 0"	4	12"	7'- 0"
5	7	8"	8"	8"	8"	21	21'- 0"	21	21'- 0"	5	5'- 0"	4	12"	21'- 11"	4	12"	23'- 0"	4	12"	2'- 11"	5'- 7"	4	12"	2'- 4"	4'- 8"	6'- 9"	5	12"	8'- 0"	4	12"	8'- 0"
6	4	9¼"	9¼"	8"	8"	25	25'- 0"	25	25'- 0"	2	2'- 0"	4	12"	25'- 11"	4	12"	27'- 0"	4	12"	2'- 9"	5'- 2"	4	12"	2'- 4"	3'- 4"	5'- 4"	4	12"	5'- 2"	4	12"	5'- 2"
6	5	9¼"	9¼"	8"	8"	25	25'- 0"	25	25'- 0"	3	3'- 0"	4	11"	25'- 11"	4	11"	27'- 0"	4	11"	2'- 9"	5'- 2"	4	11"	2'- 4"	3'- 10"	5'- 10"	4	12"	6'- 2"	4	12"	6'- 2"
6	6	9½"	9½"	8"	8"	25	25'- 0"	25	25'- 0"	4	4'- 0"	4	12"	25'- 11"	4	12"	27'- 0"	4	12"	2'- 10"	5'- 5"	4	12"	2'- 4"	4'- 4"	6'- 4"	4	12"	7'- 3"	4	12"	7'- 3"
6	7	9½"	9½"	8"	8"	25	25'- 0"	25	25'- 0"	5	5'- 0"	4	11"	25'- 11"	4	11"	27'- 0"	4	11"	3'- 1"	5'- 10"	4	11"	2'- 4"	4'- 10"	6'- 10"	4	12"	8'- 3"	4	12"	8'- 3"
6	8	9½"	9½"	8"	8"	25	25'- 0"	25	25'- 0"	6	6'- 0"	4	11"	25'- 8"	4	11"	27'- 0"	--	---	-----	-----	5	11"	2'- 6"	5'- 6"	7'- 7"	5	12"	9'- 3"	4	12"	9'- 3"
7	4	10½"	10½"	8"	8"	29	29'- 0"	29	29'- 0"	2	2'- 0"	4	10"	29'- 11"	4	10"	31'- 0"	3	10"	2'- 11"	5'- 8"	4	10"	2'- 4"	3'- 5"	5'- 5"	4	12"	5'- 5"	4	12"	5'- 5"
7	6	10¾"	10¾"	8"	8"	29	29'- 0"	29	29'- 0"	4	4'- 0"	4	10"	29'- 11"	4	10"	31'- 0"	3	10"	3'- 0"	5'- 8"	4	10"	2'- 4"	4'- 5"	6'- 6"	4	12"	7'- 5"	4	12"	7'- 5"
7	8	11"	11"	8"	8"	29	29'- 0"	29	29'- 0"	6	6'- 0"	4	10"	29'- 11"	4	10"	31'- 0"	3	10"	3'- 5"	6'- 7"	4	10"	2'- 4"	5'- 5"	7'- 6"	5	12"	9'- 6"	4	12"	9'- 6"
7	10	11¼"	11¼"	8"	8"	29	29'- 0"	29	29'- 0"	8	8'- 0"	4	10"	29'- 8"	4	10"	31'- 0"	3	10"	3'- 10"	7'- 5"	5	10"	2'- 6"	6'- 8"	8'- 9"	6	10½"	11'- 6"	4	12"	11'- 6"
8	4	12"	12"	8"	8"	33	33'- 0"	33	33'- 0"	2	2'- 0"	4	9"	33'- 11"	4	9"	35'- 0"	3	9"	3'- 2"	6'- 1"	4	9"	2'- 4"	3'- 6"	5'- 7"	4	12"	5'- 8"	4	12"	5'- 8"
8	6	12¼"	12¼"	8"	8"	33	33'- 0"	33	33'- 0"	4	4'- 0"	4	9"	33'- 11"	4	9"	35'- 0"	--	---	-----	-----	4	9"	2'- 4"	4'- 7"	6'- 7"	4	12"	7'- 8"	4	12"	7'- 8"
8	8	12¼"	12¼"	8"	8"	33	33'- 0"	33	33'- 0"	6	6'- 0"	5	9"	33'- 11"	5	9"	35'- 0"	3	9"	3'- 6"	6'- 9"	4	9"	2'- 9"	5'- 7"	8'- 0"	5	12"	9'- 8"	4	12"	9'- 8"
8	10	12½"	12½"	8"	8"	33	33'- 0"	33	33'- 0"	8	8'- 0"	5	9"	33'- 8"	5	9"	35'- 0"	3	9"	3'- 11"	7'- 7"	5	9"	2'- 11"	6'- 9"	9'- 3"	5	7"	11'- 9"	4	12"	11'- 9"
9	4	13"	13"	8"	8"	37	37'- 0"	37	37'- 0"	2	2'- 0"	5	8"	37'- 11"	5	8"	39'- 0"	3	8"	3'- 4"	6'- 5"	4	8"	2'- 9"	3'- 7"	6'- 1"	4	10½"	5'- 10"	4	12"	5'- 10"
9	6	13¼"	13¼"	8"	8"	37	37'- 0"	37	37'- 0"	4	4'- 0"	5	8"	37'- 11"	5	8"	39'- 0"	--	---	-----	-----	4	8"	2'- 9"	4'- 8"	7'- 1"	4	12"	7'- 10"	4	12"	7'- 10"
9	8	13¼"	13¼"	8"	8"	37	37'- 0"	37	37'- 0"	6	6'- 0"	5	8"	37'- 11"	5	8"	39'- 0"	3	8"	3'- 7"	6'- 11"	4	8"	2'- 9"	5'- 8"	8'- 1"	5	12"	9'- 10"	4	12"	9'- 10"
9	10	13½"	13½"	8"	8"	37	37'- 0"	37	37'- 0"	8	8'- 0"	5	8"	37'- 11"	5	8"	39'- 0"	4	8"	4'- 0"	7'- 8"	4	8"	2'- 9"	6'- 8"	9'- 1"	5	8"	11'- 11"	4	12"	11'- 11"
9	12	13½"	13½"	9.5"	8"	37	37'- 0"	37	37'- 0"	10	10'- 0"	5	9"	37'- 5"	5	9"	39'- 3"	--	---	-----	-----	7	9"	3'- 2"	8'- 3"	10'- 11"	6	7½"	13'- 11"	4	12"	13'- 11"
10	4	14¼"	14¼"	8"	8"	41	41'- 0"	41	41'- 0"	2	2'- 0"	5	9"	41'- 8"	5	9"	43'- 0"	--	---	-----	-----	5	9"	2'- 11"	3'- 11"	6'- 5"	4	10"	6'- 0"	4	12"	6'- 0"
10	6	14½"	14½"	8"	8"	41	41'- 0"	41	41'- 0"	4	4'- 0"	5	9"	41'- 8"	5	9"	43'- 0"	--	---	-----	-----	5	9"	2'- 11"	4'- 11"	7'- 5"	4	12"	8'- 0"	4	12"	8'- 0"
10	8	14½"	14½"	8"	8"	41	41'- 0"	41	41'- 0"	6	6'- 0"	5	9"	41'- 8"	5	9"	43'- 0"	--	---	-----	-----	5	9"	2'- 11"	5'- 11"	8'- 5"	5	12"	10'- 0"	4	12"	10'- 0"
10	10	14¾"	14¾"	8"	8"	41	41'- 0"	41	41'- 0"	8	8'- 0"	5	9"	41'- 8"	5	9"	43'- 0"	3	9"	4'- 1"	8'- 0"	5	9"	2'- 11"	6'- 11"	9'- 5"	5	8"	12'- 1"	4	12"	12'- 1"
10	12	14¾"	14¾"	9.5"	8"	41	41'- 0"	41	41'- 0"	10	10'- 0"	6	9"	41'- 8"	5	9"	43'- 3"	3	9"	4'- 6"	8'- 9"	6	9"	3'- 5"	8'- 1"	11'- 1"	6	7½"	14'- 1"	4	12"	14'- 1"
12	6	17"	17"	8"	8"	49	49'- 0"	49	49'- 0"	4	4'- 0"	6	8"	49'- 11"	5	8"	51'- 0"	--	---	-----	-----	4	8"	3'- 2"	4'- 11"	7'- 10"	4	12"	8'- 6"	4	12"	8'- 6"
12	8	17¼"	17¼"	8"	8"	49	49'- 0"	49	49'- 0"	6	6'- 0"	6	8"	49'- 11"	5	8"	51'- 0"	3	8"	3'- 11"	7'- 8"	4	8"	3'- 2"	6'- 0"	8'- 10"	5	12"	10'- 6"	4	12"	10'- 6"
12	10	17½"	17½"	8"	8"	49	49'- 0"	49	49'- 0"	8	8'- 0"	6	8"	49'- 8"	5	8"	51'- 0"	--	---	-----	-----	5	8"	3'- 4"	7'- 2"	10'- 1"	5	7½"	12'- 6"	4	12"	12'- 6"
12	12	17½"	17½"	9.5"	8"	49	49'- 0"	49	49'- 0"	10	10'- 0"	6	8"	49'- 11"	5	8"	51'- 3"	4	8"	4'- 9"	9'- 2"	5	8"	3'- 4"	8'- 2"	11'- 1"	6	7½"	14'- 6"	4	12"	14'- 6"

A COPY OF THE ORIGINAL SEALED AND SIGNED DRAWING IS ON FILE IN THE CENTRAL OFFICE

VDOT
ROAD AND BRIDGE STANDARDS

SHEET 1 OF 2 | REVISION DATE
1005.11 | 07/11

QUADRUPLE BOX CULVERTS

10 TO 20 FT. FILLS

VIRGINIA DEPARTMENT OF TRANSPORTATION

SPECIFICATION REFERENCE

BCQ-20

FOR TYPICAL SECTION, NOTES AND OTHER DETAILS, REFER TO STANDARD BCQ-DT.

		REINFORCING STEEL													QUAN./LF		HEADWALLS									
SPAN	HGHT	BT1															G	HW1								
(FT.)	(FT.)	SIZE	SPACING c-c	a	b	c	d	e	f	g	LENGTH	NO. BL1 #4 BARS	NO. BL2 #3 BARS	REINFORCING STEEL (LBS/LONG. JT)	CONCRETE CLASS A4 (CY/LF)	REINFORCING STEEL (LBS/LF)	HEADWALL LENGTH	SIZE	LENGTH	NO. HW2 BARS	NO. HW3 BARS	INLET CONCRETE CL. A4 (CY)	INLET REINFORCING STEEL (LBS)	OUTLET CONCRETE CL. A4 (CY)	OUTLET REINFORCING STEEL (LBS)	WINGWALL
3	3	4	12"	2'- 7"	0'- 4"	1'- 10"	0'- 5 1/8"	0'- 3 1/4"	15'- 0"	1'- 3"	15'- 7"	60	20	57.160	1.283	141.073	16'-10"	6	16'- 6"	3	12	2.222	137.876	2.191	99.132	A
3	4	4	12"	2'- 7"	0'- 4"	1'- 10"	0'- 5 1/8"	0'- 3 1/4"	15'- 0"	1'- 3"	15'- 7"	60	30	60.690	1.406	151.513	16'-10"	6	16'- 6"	3	15	2.333	148.230	2.284	99.132	C
4	3	4	12"	3'- 5"	0'- 4"	2'- 3"	0'- 5 1/8"	0'- 3 1/4"	19'- 0"	1'- 10"	19'- 7"	76	20	70.520	1.479	167.793	20'-10"	6	20'- 6"	3	12	2.626	161.908	2.609	123.164	A
4	4	4	12"	3'- 5"	0'- 4"	2'- 3"	0'- 5 1/8"	0'- 3 1/4"	19'- 0"	1'- 10"	19'- 7"	76	30	74.050	1.602	178.233	20'-10"	6	20'- 6"	3	15	2.738	172.262	2.702	123.164	C
4	5	4	12"	3'- 5"	0'- 4"	2'- 3"	0'- 5 1/8"	0'- 3 1/4"	19'- 0"	1'- 10"	19'- 7"	76	40	77.580	1.724	188.673	20'-10"	6	20'- 6"	3	18	2.849	182.616	2.794	123.164	E
4	6	4	12"	3'- 5"	0'- 4"	2'- 3"	0'- 5 1/8"	0'- 3 1/4"	19'- 0"	1'- 10"	19'- 7"	76	50	81.110	1.847	199.113	20'-10"	6	20'- 6"	3	21	2.960	192.970	2.887	123.164	G
5	3	4	12"	4'- 2"	0'- 4"	2'- 8"	0'- 5 1/8"	0'- 3 1/4"	23'- 0"	2'- 5"	23'- 7"	92	20	83.880	1.673	207.164	24'-10"	6	24'- 6"	3	12	3.031	185.940	3.027	147.196	A
5	4	4	12"	4'- 2"	0'- 4"	2'- 8"	0'- 5 1/8"	0'- 3 1/4"	23'- 0"	2'- 5"	23'- 7"	92	30	87.410	1.796	217.604	24'-10"	6	24'- 6"	3	15	3.142	196.294	3.120	147.196	C
5	5	4	12"	4'- 2"	0'- 4"	2'- 8"	0'- 5 1/8"	0'- 3 1/4"	23'- 0"	2'- 5"	23'- 7"	92	40	90.940	1.919	222.614	24'-10"	6	24'- 6"	3	18	3.254	206.648	3.212	147.196	E
5	6	4	12"	4'- 2"	0'- 4"	2'- 8"	0'- 5 1/8"	0'- 3 1/4"	23'- 0"	2'- 5"	23'- 7"	92	50	94.470	2.042	233.655	24'-10"	6	24'- 6"	3	21	3.365	217.002	3.305	147.196	G
5	7	4	12"	4'- 2"	0'- 4"	2'- 8"	0'- 5 1/8"	0'- 3 1/4"	23'- 0"	2'- 5"	23'- 7"	92	60	98.000	2.163	257.062	24'-10"	6	24'- 6"	3	24	3.476	227.356	3.398	147.196	I
6	4	4	12"	4'- 11"	0'- 5 1/4"	3'- 0"	0'- 7"	0'- 4 1/2"	27'- 0"	2'- 10"	27'- 11"	108	30	100.770	2.202	247.126	28'-10"	6	28'- 6"	3	15	3.485	220.326	3.475	171.228	D
6	5	4	11"	4'- 11"	0'- 5 1/4"	3'- 0"	0'- 7"	0'- 4 1/2"	27'- 0"	2'- 10"	27'- 11"	108	40	104.300	2.324	270.040	28'-10"	6	28'- 6"	3	18	3.596	230.680	3.568	171.228	F
6	6	4	12"	4'- 11"	0'- 5 1/2"	3'- 0"	0'- 7 1/4"	0'- 4 3/4"	27'- 0"	2'- 10"	27'- 11"	108	50	107.830	2.490	269.021	28'-10"	6	28'- 6"	3	21	3.691	241.034	3.644	171.228	H
6	7	4	11"	4'- 11"	0'- 5 1/2"	3'- 0"	0'- 7 1/4"	0'- 4 3/4"	27'- 0"	2'- 10"	27'- 11"	108	60	111.360	2.611	293.415	28'-10"	6	28'- 6"	3	24	3.803	251.388	3.737	171.228	J
6	8	4	11"	4'- 11"	0'- 5 1/2"	3'- 0"	0'- 7 1/4"	0'- 4 3/4"	27'- 0"	2'- 10"	27'- 11"	108	70	114.890	2.734	306.706	28'-10"	6	28'- 6"	3	27	3.914	261.742	3.830	171.228	L
7	4	4	10"	5'- 7"	0'- 6 1/2"	3'- 5"	0'- 8 3/4"	0'- 5 3/4"	31'- 0"	3'- 3"	32'- 2"	124	30	114.130	2.668	299.731	32'-10"	6	32'- 6"	3	15	3.778	244.358	3.781	195.260	D
7	6	4	10"	5'- 7"	0'- 6 3/4"	3'- 5"	0'- 9"	0'- 6"	31'- 0"	3'- 2"	32'- 2"	124	50	121.190	2.962	321.622	32'-10"	6	32'- 6"	3	21	3.981	265.066	3.947	195.260	H
7	8	4	10"	5'- 7"	0'- 7"	3'- 5"	0'- 9 3/8"	0'- 6 1/4"	31'- 0"	3'- 2"	32'- 3"	124	70	128.250	3.255	352.053	32'-10"	6	32'- 6"	3	27	4.184	285.774	4.113	195.260	L
7	10	4	10"	5'- 6"	0'- 7 1/4"	3'- 5"	0'- 9 3/4"	0'- 6 1/2"	31'- 0"	3'- 1"	32'- 3"	124	90	135.310	3.546	408.419	32'-10"	6	32'- 6"	3	33	4.388	306.482	4.280	195.260	P
8	4	4	9"	6'- 3"	0'- 8"	3'- 10"	0'- 10 7/8"	0'- 7 1/4"	35'- 0"	3'- 7"	36'- 5"	140	30	127.490	3.251	354.559	36'-10"	6	36'- 6"	3	15	4.017	268.390	4.034	219.292	D
8	6	4	9"	6'- 3"	0'- 8 1/4"	3'- 10"	0'- 11 1/8"	0'- 7 1/2"	35'- 0"	3'- 6"	36'- 6"	140	50	134.550	3.551	364.684	36'-10"	6	36'- 6"	3	21	4.217	289.098	4.197	219.292	H
8	8	5	9"	6'- 3"	0'- 8 1/4"	3'- 10"	0'- 11"	0'- 7 3/8"	35'- 0"	3'- 7"	36'- 5"	140	70	141.610	3.787	514.012	36'-10"	6	36'- 6"	3	27	4.440	309.806	4.382	219.292	L
8	10	5	9"	6'- 3"	0'- 8 1/2"	3'- 10"	0'- 11 3/8"	0'- 7 5/8"	35'- 0"	3'- 6"	36'- 6"	140	90	148.670	4.083	575.477	36'-10"	6	36'- 6"	3	33	4.640	330.514	4.546	219.292	P
9	4	5	8"	7'- 0"	0'- 9"	4'- 3"	1'- 1/8"	0'- 8 1/8"	39'- 0"	4'- 0"	40'- 7"	156	30	140.850	3.774	554.231	40'-10"	6	40'- 6"	3	15	4.270	292.422	4.301	243.324	D
9	6	5	8"	7'- 0"	0'- 9 1/4"	4'- 3"	1'- 1/2"	0'- 8 3/8"	39'- 0"	4'- 0"	40'- 8"	156	50	147.910	4.081	561.360	40'-10"	6	40'- 6"	3	21	4.468	313.130	4.461	243.324	H
9	8	5	8"	7'- 0"	0'- 9 1/4"	4'- 3"	1'- 1/2"	0'- 8 3/8"	39'- 0"	4'- 0"	40'- 8"	156	70	154.970	4.325	606.495	40'-10"	6	40'- 6"	3	27	4.690	333.838	4.646	243.324	L
9	10	5	8"	6'- 11"	0'- 9 1/2"	4'- 3"	1'- 7/8"	0'- 8 5/8"	39'- 0"	3'- 11"	40'- 9"	156	90	162.030	4.628	658.293	40'-10"	6	40'- 6"	3	33	4.888	354.546	4.806	243.324	P
9	12	5	9"	7'- 1"	0'- 9 1/2"	4'- 3"	1'- 7/8"	0'- 8 5/8"	39'- 3"	3'- 11"	41'- 0"	156	110	169.090	5.003	713.711	40'-10"	6	40'- 6"	3	39	5.110	375.254	4.992	243.324	T
10	4	5	9"	7'- 8"	0'- 10 1/4"	4'- 8"	1'- 1 7/8"	0'- 9 3/8"	43'- 0"	4'- 5"	44'- 10"	172	30	154.210	4.429	555.819	44'-10"	6	44'- 6"	3	15	4.471	316.454	4.514	267.356	D
10	6	5	9"	7'- 8"	0'- 10 1/2"	4'- 8"	1'- 2 1/4"	0'- 9 5/8"	43'- 0"	4'- 4"	44'- 11"	172	50	161.270	4.742	578.457	44'-10"	6	44'- 6"	3	21	4.665	337.162	4.671	267.356	H
10	8	5	9"	7'- 8"	0'- 10 1/2"	4'- 8"	1'- 2 1/4"	0'- 9 5/8"	43'- 0"	4'- 4"	44'- 11"	172	70	168.330	4.986	609.791	44'-10"	6	44'- 6"	3	27	4.887	357.870	4.856	267.356	L
10	10	5	9"	7'- 8"	0'- 10 3/4"	4'- 8"	1'- 2 5/8"	0'- 9 7/8"	43'- 0"	4'- 4"	45'- 0"	172	90	175.390	5.296	664.116	44'-10"	6	44'- 6"	3	33	5.082	378.578	5.013	267.356	P
10	12	6	9"	7'- 9"	0'- 10 3/4"	4'- 8"	1'- 2 1/2"	0'- 9 3/4"	43'- 3"	4'- 4"	45'- 2"	172	110	182.450	5.662	854.988	44'-10"	6	44'- 6"	3	39	5.304	399.286	5.199	267.356	T
12	6	6	8"	9'- 1"	1'- 1"	5'- 5"	1'- 5 5/8"	1'- 0"	51'- 0"	5'- 3"	53'- 5"	204	50	187.990	6.228	856.933	52'-10"	6	52'- 6"	3	21	4.985	385.226	5.018	315.420	I
12	8	6	8"	9'- 1"	1'- 1 1/4"	5'- 5"	1'- 6"	1'- 1/4"	51'- 0"	5'- 2"	53'- 5"	204	70	195.050	6.551	904.742	52'-10"	6	52'- 6"	3	27	5.173	405.934	5.169	315.420	M
12	10	6	8"	9'- 1"	1'- 1 1/2"	5'- 5"	1'- 6 3/8"	1'- 1/2"	51'- 0"	5'- 2"	53'- 6"	204	90	202.110	6.873	949.975	52'-10"	6	52'- 6"	3	33	5.361	426.642	5.319	315.420	Q
12	12	6	8"	9'- 2"	1'- 1 1/2"	5'- 5"	1'- 6 3/8"	1'- 1/2"	51'- 3"	5'- 2"	53'- 9"	204	110	209.170	7.252	1039.445	52'-10"	6	52'- 6"	3	39	5.584	447.350	5.505	315.420	U

A COPY OF THE ORIGINAL SEALED AND SIGNED DRAWING IS ON FILE IN THE CENTRAL OFFICE.

SPECIFICATION REFERENCE

QUADRUPLE BOX CULVERTS

10 TO 20 FT. FILLS

VIRGINIA DEPARTMENT OF TRANSPORTATION

VDOT

ROAD AND BRIDGE STANDARDS

REVISION DATE 07/11

SHEET 2 OF 2

1005.12

BCQ-30

FOR TYPICAL SECTION, NOTES AND OTHER DETAILS, REFER TO STANDARD BCQ-DT.

DIMENSIONS						REINFORCING STEEL																										
SPAN	HGHT	T1	T2	T3	T4							BH1			BH2			BH3				BH4					BV1			BV2		
(FT.)	(FT.)	TOP SLAB	BOTTOM SLAB	EXTERIOR WALL (IN.)	INTERIOR WALL (IN.)	A	B	C	D	E	F	SIZE	SPACING c-c	LENGTH	SIZE	SPACING c-c	LENGTH	SIZE	SPACING c-c	a	LENGTH	SIZE	SPACING c-c	a	b	LENGTH	SIZE	SPACING c-c	LENGTH	SIZE	SPACING c-c	LENGTH
3	3	8"	8"	8"	8"	13	13'- 0"	13	13'- 0"	1	1'- 0"	4	12"	13'- 11"	4	12"	15'- 0"	--	---	-----	-----	4	12"	2'- 4"	2'- 8"	4'- 9"	4	12"	4'- 0"	4	12"	4'- 0"
3	4	8"	8"	8"	8"	13	13'- 0"	13	13'- 0"	2	2'- 0"	4	12"	13'- 11"	4	12"	15'- 0"	--	---	-----	-----	4	12"	2'- 4"	3'- 2"	5'- 3"	4	12"	5'- 0"	4	12"	5'- 0"
4	3	8½"	8½"	8"	8"	17	17'- 0"	17	17'- 0"	1	1'- 0"	4	12"	17'- 11"	4	12"	19'- 0"	--	---	-----	-----	4	12"	2'- 4"	2'- 9"	4'- 9"	4	12"	4'- 1"	4	12"	4'- 1"
4	4	8½"	8½"	8"	8"	17	17'- 0"	17	17'- 0"	2	2'- 0"	4	12"	17'- 11"	4	12"	19'- 0"	--	---	-----	-----	4	12"	2'- 4"	3'- 3"	5'- 3"	4	12"	5'- 1"	4	12"	5'- 1"
4	5	8½"	8½"	8"	8"	17	17'- 0"	17	17'- 0"	3	3'- 0"	4	12"	17'- 11"	4	12"	19'- 0"	--	---	-----	-----	4	12"	2'- 4"	3'- 9"	5'- 9"	4	12"	6'- 1"	4	12"	6'- 1"
4	6	8½"	8½"	8"	8"	17	17'- 0"	17	17'- 0"	4	4'- 0"	4	12"	17'- 11"	4	12"	19'- 0"	--	---	-----	-----	4	12"	2'- 4"	4'- 3"	6'- 3"	5	12"	7'- 1"	4	12"	7'- 1"
5	3	10¼"	10¼"	8"	8"	21	21'- 0"	21	21'- 0"	1	1'- 0"	4	12"	21'- 11"	4	12"	23'- 0"	3	12"	2'- 6"	4'- 10"	4	12"	2'- 4"	2'- 11"	4'- 11"	4	12"	4'- 4"	4	12"	4'- 4"
5	4	10"	10"	8"	8"	21	21'- 0"	21	21'- 0"	2	2'- 0"	4	12"	21'- 11"	4	12"	23'- 0"	3	12"	2'- 6"	4'- 10"	4	12"	2'- 4"	3'- 4"	5'- 5"	4	12"	5'- 4"	4	12"	5'- 4"
5	5	10¼"	10¼"	8"	8"	21	21'- 0"	21	21'- 0"	3	3'- 0"	4	12"	21'- 11"	4	12"	23'- 0"	3	12"	2'- 9"	5'- 3"	4	12"	2'- 4"	3'- 11"	5'- 11"	4	12"	6'- 4"	4	12"	6'- 4"
5	6	10"	10"	8"	8"	21	21'- 0"	21	21'- 0"	4	4'- 0"	4	12"	21'- 11"	4	12"	23'- 0"	4	12"	2'- 11"	5'- 6"	4	12"	2'- 4"	4'- 4"	6'- 5"	5	12"	7'- 4"	4	12"	7'- 4"
5	7	10"	10"	8"	8"	21	21'- 0"	21	21'- 0"	5	5'- 0"	4	12"	21'- 11"	4	12"	23'- 0"	4	12"	3'- 1"	5'- 11"	4	12"	2'- 4"	4'- 10"	6'- 11"	5	12"	8'- 3"	4	12"	8'- 3"
6	4	12"	12"	8"	8"	25	25'- 0"	25	25'- 0"	2	2'- 0"	4	10"	25'- 11"	4	10"	27'- 0"	--	---	-----	-----	4	10"	2'- 4"	3'- 6"	5'- 7"	4	12"	5'- 8"	4	12"	5'- 8"
6	5	12¼"	12¼"	8"	8"	25	25'- 0"	25	25'- 0"	3	3'- 0"	4	10"	25'- 11"	4	10"	27'- 0"	--	---	-----	-----	4	10"	2'- 4"	4'- 1"	6'- 1"	4	12"	6'- 8"	4	12"	6'- 8"
6	6	11½"	11½"	8"	8"	25	25'- 0"	25	25'- 0"	4	4'- 0"	4	10"	25'- 11"	4	10"	27'- 0"	--	---	-----	-----	4	10"	2'- 4"	4'- 6"	6'- 6"	4	12"	7'- 7"	4	12"	7'- 7"
6	7	11½"	11½"	8"	8"	25	25'- 0"	25	25'- 0"	5	5'- 0"	4	10"	25'- 11"	4	10"	27'- 0"	3	10"	3'- 3"	6'- 3"	4	10"	2'- 4"	5'- 0"	7'- 0"	5	12"	8'- 6"	4	12"	8'- 6"
6	8	11¾"	11¾"	8"	8"	25	25'- 0"	25	25'- 0"	6	6'- 0"	4	10"	25'- 8"	4	10"	27'- 0"	--	---	-----	-----	5	10"	2'- 6"	5'- 8"	7'- 9"	5	8½"	9'- 7"	4	12"	9'- 7"
7	4	13½"	13½"	8"	8"	29	29'- 0"	29	29'- 0"	2	2'- 0"	4	9"	29'- 11"	4	9"	31'- 0"	--	---	-----	-----	4	9"	2'- 4"	3'- 8"	5'- 8"	4	12"	5'- 11"	4	12"	5'- 11"
7	6	13½"	13½"	8"	8"	29	29'- 0"	29	29'- 0"	4	4'- 0"	4	9"	29'- 11"	5	9"	31'- 0"	--	---	-----	-----	4	9"	2'- 4"	4'- 8"	6'- 8"	4	12"	7'- 11"	4	12"	7'- 11"
7	8	13¼"	13¼"	8"	8"	29	29'- 0"	29	29'- 0"	6	6'- 0"	4	9"	29'- 11"	5	9"	31'- 0"	3	9"	3'- 7"	6'- 11"	4	9"	2'- 4"	5'- 8"	7'- 8"	5	9"	9'- 10"	4	12"	9'- 10"
7	10	13¼"	13¼"	9½"	8"	29	29'- 0"	29	29'- 0"	8	8'- 0"	4	9"	29'- 11"	5	9"	31'- 3"	3	9"	4'- 0"	7'- 9"	5	9"	2'- 6"	6'- 10"	8'- 11"	6	8"	11'- 10"	4	12"	11'- 10"
8	4	15½"	15½"	8"	8"	33	33'- 0"	33	33'- 0"	2	2'- 0"	5	9"	33'- 11"	5	9"	35'- 0"	--	---	-----	-----	4	9"	2'- 9"	3'- 10"	6'- 3"	4	12"	6'- 3"	4	12"	6'- 3"
8	6	15½"	15½"	8"	8"	33	33'- 0"	33	33'- 0"	4	4'- 0"	5	9"	33'- 11"	5	9"	35'- 0"	--	---	-----	-----	4	9"	2'- 9"	4'- 10"	7'- 3"	4	12"	8'- 3"	4	12"	8'- 3"
8	8	15¼"	15¼"	8"	8"	33	33'- 0"	33	33'- 0"	6	6'- 0"	5	9"	33'- 11"	5	9"	35'- 0"	3	9"	3'- 9"	7'- 3"	4	9"	2'- 9"	5'- 10"	8'- 3"	5	9"	10'- 2"	4	12"	10'- 2"
8	10	15"	15"	9½"	8"	33	33'- 0"	33	33'- 0"	8	8'- 0"	5	9"	33'- 11"	5	9"	35'- 3"	3	9"	4'- 1"	8'- 0"	5	9"	2'- 11"	6'- 11"	9'- 6"	7	11½"	12'- 1"	4	12"	12'- 1"
9	4	17"	17"	8"	8"	37	37'- 0"	37	37'- 0"	2	2'- 0"	6	9"	37'- 11"	5	9"	39'- 0"	--	---	-----	-----	4	9"	3'- 2"	3'- 11"	6'- 10"	4	12"	6'- 6"	4	12"	6'- 6"
9	6	17"	17"	8"	8"	37	37'- 0"	37	37'- 0"	4	4'- 0"	6	9"	37'- 11"	5	9"	39'- 0"	--	---	-----	-----	4	9"	3'- 2"	4'- 11"	7'- 10"	4	12"	8'- 6"	4	12"	8'- 6"
9	8	17"	17"	8"	8"	37	37'- 0"	37	37'- 0"	6	6'- 0"	6	9"	37'- 8"	5	9"	39'- 0"	--	---	-----	-----	5	9"	3'- 4"	6'- 2"	9'- 1"	5	9"	10'- 6"	4	12"	10'- 6"
9	10	17"	17"	9"	8"	37	37'- 0"	37	37'- 0"	8	8'- 0"	5	9"	37'- 7"	5	9"	39'- 1"	--	---	-----	-----	6	9"	3'- 0"	7'- 3"	9'- 10"	6	8"	12'- 6"	4	12"	12'- 6"
9	12	17"	17"	11"	8"	37	37'- 0"	37	37'- 0"	10	10'- 0"	5	9"	37'- 8"	5	9"	39'- 6"	--	---	-----	-----	7	9"	3'- 2"	8'- 6"	11'- 2"	5	5½"	14'- 6"	4	12"	14'- 6"
10	4	18½"	18½"	8"	8"	41	41'- 0"	41	41'- 0"	2	2'- 0"	6	9"	41'- 11"	6	9"	43'- 0"	--	---	-----	-----	4	9"	3'- 2"	4'- 1"	6'- 11"	4	12"	6'- 9"	4	10½"	6'- 9"
10	6	18½"	18½"	8"	8"	41	41'- 0"	41	41'- 0"	4	4'- 0"	6	9"	41'- 11"	6	9"	43'- 0"	--	---	-----	-----	4	9"	3'- 2"	5'- 1"	7'- 11"	4	12"	8'- 9"	4	10½"	8'- 9"
10	8	18¾"	18¾"	8"	8"	41	41'- 0"	41	41'- 0"	6	6'- 0"	6	9"	41'- 11"	6	9"	43'- 0"	3	9"	4'- 0"	7'- 10"	4	9"	3'- 2"	6'- 1"	9'- 0"	5	9"	10'- 9"	4	11"	10'- 9"
10	10	18¾"	18¾"	9"	8"	41	41'- 0"	41	41'- 0"	8	8'- 0"	6	9"	41'- 10"	6	9"	43'- 1"	3	9"	4'- 5"	8'- 8"	5	9"	3'- 4"	7'- 3"	10'- 2"	5	5"	12'- 9"	4	11"	12'- 9"
10	12	18¾"	18¾"	11"	8"	41	41'- 0"	41	41'- 0"	10	10'- 0"	6	9"	41'- 11"	6	9"	43'- 6"	4	9"	4'- 10"	9'- 4"	6	9"	3'- 5"	8'- 5"	11'- 5"	5	5½"	14'- 9"	4	11"	14'- 9"
12	6	21¾"	21¾"	8"	8"	49	49'- 0"	49	49'- 0"	4	4'- 0"	6	8"	49'- 11"	6	8"	51'- 0"	--	---	-----	-----	4	8"	3'- 2"	5'- 4"	8'- 3"	4	12"	9'- 3"	4	10"	9'- 3"
12	8	21¾"	21¾"	8"	8"	49	49'- 0"	49	49'- 0"	6	6'- 0"	6	8"	49'- 11"	6	8"	51'- 0"	3	8"	4'- 3"	8'- 4"	4	8"	3'- 2"	6'- 4"	9'- 3"	5	8½"	11'- 3"	4	10"	11'- 3"
12	10	21¾"	21¾"	8½"	8"	49	49'- 0"	49	49'- 0"	8	8'- 0"	6	8"	49'- 9"	6	8"	51'- 0"	3	8"	4'- 8"	9'- 2"	5	8"	3'- 4"	7'- 6"	10'- 5"	5	5"	13'- 3"	4	10"	13'- 3"
12	12	21¾"	21¾"	11"	8"	49	49'- 0"	49	49'- 0"	10	10'- 0"	6	8"	50'- 2"	6	8"	51'- 6"	4	8"	5'- 1"	9'- 10"	5	8"	3'- 4"	8'- 6"	11'- 5"	5	5½"	15'- 3"	4	10"	15'- 3"

A COPY OF THE ORIGINAL SEALED AND SIGNED DRAWING IS ON FILE IN THE CENTRAL OFFICE

VDOT
ROAD AND BRIDGE STANDARDS

SHEET 1 OF 2 | REVISION DATE
1005.13 | 07/11

QUADRUPLE BOX CULVERTS

20 TO 30 FT. FILLS

VIRGINIA DEPARTMENT OF TRANSPORTATION

SPECIFICATION REFERENCE

BCQ-30

FOR TYPICAL SECTION, NOTES AND OTHER DETAILS, REFER TO STANDARD BCQ-DT.

SPAN	HGHT	REINFORCING STEEL												REINFORCING STEEL (LBS/LONG. JT)	QUAN./LF		HEADWALLS									WINGWALL
		BT1															G	HW1								
(FT.)	(FT.)	SIZE	SPACING c-c	a	b	c	d	e	f	g	LENGTH	NO. BL1 #4 BARS	NO. BL2 #3 BARS		CONCRETE CLASS A4 (CY/LF)	REINFORCING STEEL (LBS/LF)	HEADWALL LENGTH	SIZE	LENGTH	NO. HW2 BARS	NO. HW3 BARS	INLET CONCRETE CL. A4 (CY)	INLET REINFORCING STEEL (LBS)	OUTLET CONCRETE CL. A4 (CY)	OUTLET REINFORCING STEEL (LBS)	
3	3	4	12"	2'- 7"	0'- 4"	1'- 10"	0'- 5 1/8"	0'- 3 1/4"	15'- 0"	1'- 3"	15'- 7"	60	20	57.160	1.283	141.073	16'-10"	6	16'- 6"	3	12	2.222	137.876	2.191	99.132	A
3	4	4	12"	2'- 7"	0'- 4"	1'- 10"	0'- 5 1/8"	0'- 3 1/4"	15'- 0"	1'- 3"	15'- 7"	60	30	60.690	1.406	151.513	16'-10"	6	16'- 6"	3	15	2.333	148.230	2.284	99.132	C
4	3	4	12"	3'- 4"	0'- 4 1/2"	2'- 3"	0'- 5 7/8"	0'- 3 3/4"	19'- 0"	1'- 9"	19'- 9"	76	20	70.520	1.538	168.486	20'-10"	6	20'- 6"	3	12	2.606	161.908	2.589	123.164	A
4	4	4	12"	3'- 4"	0'- 4 1/2"	2'- 3"	0'- 5 7/8"	0'- 3 3/4"	19'- 0"	1'- 9"	19'- 9"	76	30	74.050	1.661	178.926	20'-10"	6	20'- 6"	3	15	2.718	172.262	2.682	123.164	C
4	5	4	12"	3'- 4"	0'- 4 1/2"	2'- 3"	0'- 5 7/8"	0'- 3 3/4"	19'- 0"	1'- 9"	19'- 9"	76	40	77.580	1.784	189.366	20'-10"	6	20'- 6"	3	18	2.829	182.616	2.774	123.164	E
4	6	4	12"	3'- 4"	0'- 4 1/2"	2'- 3"	0'- 5 7/8"	0'- 3 3/4"	19'- 0"	1'- 9"	19'- 9"	76	50	81.110	1.906	205.118	20'-10"	6	20'- 6"	3	21	2.940	192.970	2.867	123.164	G
5	3	4	12"	4'- 0"	0'- 6 1/4"	2'- 8"	0'- 8 3/8"	0'- 5 1/2"	23'- 0"	2'- 0"	24'- 1"	92	20	83.880	1.998	204.855	24'-10"	6	24'- 6"	3	12	2.932	185.940	2.927	147.196	B
5	4	4	12"	4'- 0"	0'- 6"	2'- 8"	0'- 8"	0'- 5 1/4"	23'- 0"	2'- 1"	24'- 0"	92	30	87.410	2.084	214.948	24'-10"	6	24'- 6"	3	15	3.056	196.294	3.033	147.196	D
5	5	4	12"	4'- 0"	0'- 6 1/4"	2'- 8"	0'- 8 3/8"	0'- 5 1/2"	23'- 0"	2'- 0"	24'- 1"	92	40	90.940	2.243	226.299	24'-10"	6	24'- 6"	3	18	3.154	206.648	3.113	147.196	F
5	6	4	12"	4'- 0"	0'- 6"	2'- 8"	0'- 8"	0'- 5 1/4"	23'- 0"	2'- 1"	24'- 0"	92	50	94.470	2.329	248.718	24'-10"	6	24'- 6"	3	21	3.279	217.002	3.219	147.196	H
5	7	4	12"	4'- 0"	0'- 6"	2'- 8"	0'- 8"	0'- 5 1/4"	23'- 0"	2'- 1"	24'- 0"	92	60	98.000	2.451	260.977	24'-10"	6	24'- 6"	3	24	3.390	227.356	3.311	147.196	J
6	4	4	10"	4'- 8"	0'- 8"	3'- 0"	0'- 10 7/8"	0'- 7 1/4"	27'- 0"	2'- 5"	28'- 5"	108	30	100.770	2.665	261.928	28'-10"	6	28'- 6"	3	15	3.307	220.326	3.297	171.228	D
6	5	4	10"	4'- 8"	0'- 8 1/4"	3'- 0"	0'- 11 1/8"	0'- 7 1/2"	27'- 0"	2'- 4"	28'- 6"	108	40	104.300	2.830	273.007	28'-10"	6	28'- 6"	3	18	3.402	230.680	3.373	171.228	F
6	6	4	10"	4'- 9"	0'- 7 1/2"	3'- 0"	0'- 10 1/8"	0'- 6 3/4"	27'- 0"	2'- 6"	28'- 4"	108	50	107.830	2.826	282.598	28'-10"	6	28'- 6"	3	21	3.562	241.034	3.515	171.228	H
6	7	4	10"	4'- 9"	0'- 7 1/2"	3'- 0"	0'- 10 1/8"	0'- 6 3/4"	27'- 0"	2'- 6"	28'- 4"	108	60	111.360	2.947	310.904	28'-10"	6	28'- 6"	3	24	3.673	251.388	3.607	171.228	J
6	8	4	10"	4'- 8"	0'- 7 3/4"	3'- 0"	0'- 10 1/2"	0'- 7"	27'- 0"	2'- 5"	28'- 5"	108	70	114.890	3.111	334.127	28'-10"	6	28'- 6"	3	27	3.768	261.742	3.684	171.228	L
7	4	4	9"	5'- 4"	0'- 9 1/2"	3'- 5"	1'- 1"	0'- 8 3/4"	31'- 0"	2'- 9"	32'- 9"	124	30	114.130	3.248	312.794	32'-10"	6	32'- 6"	3	15	3.565	244.358	3.569	195.260	D
7	6	4	9"	5'- 4"	0'- 9 1/2"	3'- 5"	1'- 1"	0'- 8 3/4"	31'- 0"	2'- 9"	32'- 9"	124	50	121.190	3.490	365.565	32'-10"	6	32'- 6"	3	21	3.788	265.066	3.754	195.260	H
7	8	4	9"	5'- 4"	0'- 9 1/4"	3'- 5"	1'- 5/8"	0'- 8 1/2"	31'- 0"	2'- 9"	32'- 8"	124	70	128.250	3.685	415.008	32'-10"	6	32'- 6"	3	27	4.011	285.774	3.940	195.260	L
7	10	4	9"	5'- 6"	0'- 9 1/4"	3'- 5"	1'- 5/8"	0'- 8 1/2"	31'- 3"	2'- 9"	32'- 11"	124	90	135.310	4.040	481.430	32'-10"	6	32'- 6"	3	33	4.233	306.482	4.125	195.260	P
8	4	5	9"	6'- 0"	0'- 11 1/2"	3'- 10"	1'- 3 5/8"	0'- 10 5/8"	35'- 0"	3'- 0"	37'- 1"	140	30	127.490	4.006	455.459	36'-10"	6	36'- 6"	3	15	3.749	268.390	3.765	219.292	D
8	6	5	9"	6'- 0"	0'- 11 1/2"	3'- 10"	1'- 3 5/8"	0'- 10 5/8"	35'- 0"	3'- 0"	37'- 1"	140	50	134.550	4.251	477.230	36'-10"	6	36'- 6"	3	21	3.971	289.098	3.951	219.292	H
8	8	5	9"	6'- 0"	0'- 11 1/4"	3'- 10"	1'- 3 1/4"	0'- 10 3/8"	35'- 0"	3'- 1"	37'- 1"	140	70	141.610	4.440	527.772	36'-10"	6	36'- 6"	3	27	4.190	309.806	4.133	219.292	M
8	10	5	9"	6'- 2"	0'- 11"	3'- 10"	1'- 3"	0'- 10 1/8"	35'- 3"	3'- 1"	37'- 3"	140	90	148.670	4.743	592.544	36'-10"	6	36'- 6"	3	33	4.417	330.514	4.322	219.292	P
9	4	6	9"	6'- 8"	1'- 1"	4'- 3"	1'- 5 5/8"	1'- 0"	39'- 0"	3'- 5"	41'- 5"	156	30	140.850	4.742	600.657	40'-10"	6	40'- 6"	3	15	3.882	292.422	3.912	243.324	E
9	6	6	9"	6'- 8"	1'- 1"	4'- 3"	1'- 5 5/8"	1'- 0"	39'- 0"	3'- 5"	41'- 5"	156	50	147.910	4.987	622.427	40'-10"	6	40'- 6"	3	21	4.104	313.130	4.097	243.324	I
9	8	6	9"	6'- 8"	1'- 1"	4'- 3"	1'- 5 5/8"	1'- 0"	39'- 0"	3'- 5"	41'- 5"	156	70	154.970	5.230	677.154	40'-10"	6	40'- 6"	3	27	4.327	333.838	4.283	243.324	M
9	10	5	9"	6'- 9"	1'- 1"	4'- 3"	1'- 5 3/4"	1'- 1/8"	39'- 1"	3'- 4"	41'- 7"	156	90	162.030	5.558	652.398	40'-10"	6	40'- 6"	3	33	4.550	354.546	4.468	243.324	Q
9	12	5	9"	6'- 11"	1'- 1"	4'- 3"	1'- 5 3/4"	1'- 1/8"	39'- 6"	3'- 4"	41'- 11"	156	110	169.090	5.995	722.430	40'-10"	6	40'- 6"	3	39	4.727	375.254	4.608	243.324	U
10	4	6	9"	7'- 4"	1'- 2 1/2"	4'- 8"	1'- 7 3/4"	1'- 1 1/2"	43'- 0"	3'- 9"	45'- 8"	172	30	154.210	5.554	714.032	44'-10"	6	44'- 6"	3	15	4.004	316.454	4.047	267.356	E
10	6	6	9"	7'- 4"	1'- 2 1/2"	4'- 8"	1'- 7 3/4"	1'- 1 1/2"	43'- 0"	3'- 9"	45'- 8"	172	50	161.270	5.799	736.948	44'-10"	6	44'- 6"	3	21	4.227	337.162	4.233	267.356	I
10	8	6	9"	7'- 4"	1'- 2 3/4"	4'- 8"	1'- 8 1/8"	1'- 1 3/4"	43'- 0"	3'- 8"	45'- 9"	172	70	168.330	6.109	789.369	44'-10"	6	44'- 6"	3	27	4.421	357.870	4.390	267.356	M
10	10	6	9"	7'- 5"	1'- 2 3/4"	4'- 8"	1'- 8 1/8"	1'- 1 3/4"	43'- 1"	3'- 8"	45'- 11"	172	90	175.390	6.431	866.899	44'-10"	6	44'- 6"	3	33	4.643	378.578	4.575	267.356	Q
10	12	6	9"	7'- 7"	1'- 2 3/4"	4'- 8"	1'- 8 1/8"	1'- 1 3/4"	43'- 6"	3'- 8"	46'- 3"	172	110	182.450	6.871	940.128	44'-10"	6	44'- 6"	3	39	4.820	399.286	4.714	267.356	U
12	6	6	8"	8'- 8"	1'- 5 3/4"	5'- 5"	2'- 3/8"	1'- 4 3/4"	51'- 0"	4'- 5"	54'- 4"	204	50	187.990	7.727	944.848	52'-10"	6	52'- 6"	3	21	4.344	385.226	4.377	315.420	J
12	8	6	8"	8'- 8"	1'- 5 3/4"	5'- 5"	2'- 3/8"	1'- 4 3/4"	51'- 0"	4'- 5"	54'- 4"	204	70	195.050	7.969	1005.543	52'-10"	6	52'- 6"	3	27	4.567	405.934	4.562	315.420	N
12	10	6	8"	8'- 9"	1'- 5 3/4"	5'- 5"	2'- 3/8"	1'- 4 3/4"	51'- 0"	4'- 5"	54'- 5"	204	90	202.110	8.252	1086.055	52'-10"	6	52'- 6"	3	33	4.789	426.642	4.748	315.420	R
12	12	6	8"	8'- 11"	1'- 5 3/4"	5'- 5"	2'- 3/8"	1'- 4 3/4"	51'- 6"	4'- 5"	54'- 10"	204	110	209.170	8.742	1137.009	52'-10"	6	52'- 6"	3	39	4.964	447.350	4.885	315.420	V

A COPY OF THE ORIGINAL SEALED AND SIGNED DRAWING IS ON FILE IN THE CENTRAL OFFICE.

SPECIFICATION REFERENCE

QUADRUPLE BOX CULVERTS

20 TO 30 FT. FILLS

VIRGINIA DEPARTMENT OF TRANSPORTATION

VDOT

ROAD AND BRIDGE STANDARDS

REVISION DATE 07/11

SHEET 2 OF 2

1005.14

BCQ-40

FOR TYPICAL SECTION, NOTES AND OTHER DETAILS, REFER TO STANDARD BCQ-DT.

DIMENSIONS						REINFORCING STEEL																										
SPAN	HGHT	T1	T2	T3	T4							BH1			BH2			BH3				BH4					BV1			BV2		
(FT.)	(FT.)	TOP SLAB	BOTTOM SLAB	EXTERIOR WALL (IN.)	INTERIOR WALL (IN.)	A	B	C	D	E	F	SIZE	SPACING C-C	LENGTH	SIZE	SPACING C-C	LENGTH	SIZE	SPACING C-C	a	LENGTH	SIZE	SPACING C-C	a	b	LENGTH	SIZE	SPACING C-C	LENGTH	SIZE	SPACING C-C	LENGTH
3	3	8"	8"	8"	8"	13	13'- 0"	13	13'- 0"	1	1'- 0"	4	12"	13'-11"	4	12"	15'- 0"	4	12"	2'- 2"	4'- 0"	4	12"	2'- 4"	2'- 8"	4'- 9"	4	12"	4'- 0"	4	12"	4'- 0"
3	4	8"	8"	8"	8"	13	13'- 0"	13	13'- 0"	2	2'- 0"	4	12"	13'-11"	4	12"	15'- 0"	3	12"	2'- 4"	4'- 5"	4	12"	2'- 4"	3'- 2"	5'- 3"	4	12"	5'- 0"	4	12"	5'- 0"
4	3	10"	10"	8"	8"	17	17'- 0"	17	17'- 0"	1	1'- 0"	4	12"	17'-11"	4	12"	19'- 0"	--	---	-----	-----	4	12"	2'- 4"	2'- 10"	4'- 11"	4	12"	4'- 4"	4	12"	4'- 4"
4	4	9¾"	9¾"	8"	8"	17	17'- 0"	17	17'- 0"	2	2'- 0"	4	12"	17'-11"	4	12"	19'- 0"	--	---	-----	-----	4	12"	2'- 4"	3'- 4"	5'- 5"	4	12"	5'- 3"	4	12"	5'- 3"
4	5	9¾"	9¾"	8"	8"	17	17'- 0"	17	17'- 0"	3	3'- 0"	4	12"	17'-11"	4	12"	19'- 0"	--	---	-----	-----	4	12"	2'- 4"	3'- 10"	5'- 11"	4	12"	6'- 3"	4	12"	6'- 3"
4	6	9¾"	9¾"	8"	8"	17	17'- 0"	17	17'- 0"	4	4'- 0"	4	12"	17'-11"	4	12"	19'- 0"	4	12"	2'- 11"	5'- 6"	4	12"	2'- 4"	4'- 4"	6'- 5"	5	12"	7'- 3"	4	12"	7'- 3"
5	3	12"	12"	8"	8"	21	21'- 0"	21	21'- 0"	1	1'- 0"	4	11"	21'-11"	4	11"	23'- 0"	--	---	-----	-----	4	11"	2'- 4"	3'- 0"	5'- 1"	4	12"	4'- 8"	4	12"	4'- 8"
5	4	12"	12"	8"	8"	21	21'- 0"	21	21'- 0"	2	2'- 0"	4	11"	21'-11"	4	11"	23'- 0"	--	---	-----	-----	4	11"	2'- 4"	3'- 6"	5'- 7"	4	12"	5'- 8"	4	12"	5'- 8"
5	5	11¾"	11¾"	8"	8"	21	21'- 0"	21	21'- 0"	3	3'- 0"	4	11"	21'-11"	4	11"	23'- 0"	--	---	-----	-----	4	11"	2'- 4"	4'- 0"	6'- 1"	4	12"	6'- 7"	4	12"	6'- 7"
5	6	11¾"	11¾"	8"	8"	21	21'- 0"	21	21'- 0"	4	4'- 0"	4	11"	21'-11"	4	11"	23'- 0"	3	11"	3'- 1"	5'- 10"	4	11"	2'- 4"	4'- 6"	6'- 7"	5	12"	7'- 7"	4	12"	7'- 7"
5	7	11¾"	11¾"	8"	8"	21	21'- 0"	21	21'- 0"	5	5'- 0"	4	11"	21'-11"	4	11"	23'- 0"	4	11"	3'- 3"	6'- 2"	4	11"	2'- 4"	5'- 0"	7'- 1"	5	8½"	8'- 7"	4	12"	8'- 7"
6	4	14"	14"	8"	8"	25	25'- 0"	25	25'- 0"	2	2'- 0"	4	9"	25'-11"	4	9"	27'- 0"	--	---	-----	-----	4	9"	2'- 4"	3'- 8"	5'- 9"	4	12"	6'- 0"	4	12"	6'- 0"
6	5	14"	14"	8"	8"	25	25'- 0"	25	25'- 0"	3	3'- 0"	4	9"	25'-11"	4	9"	27'- 0"	--	---	-----	-----	4	9"	2'- 4"	4'- 2"	6'- 3"	4	12"	7'- 0"	4	12"	7'- 0"
6	6	14"	14"	8"	8"	25	25'- 0"	25	25'- 0"	4	4'- 0"	4	9"	25'-11"	4	9"	27'- 0"	--	---	-----	-----	4	9"	2'- 4"	4'- 8"	6'- 9"	5	12"	8'- 0"	4	12"	8'- 0"
6	7	14"	14"	8"	8"	25	25'- 0"	25	25'- 0"	5	5'- 0"	4	9"	25'-11"	4	9"	27'- 0"	3	9"	3'- 5"	6'- 8"	4	9"	2'- 4"	5'- 2"	7'- 3"	5	8½"	9'- 0"	4	12"	9'- 0"
6	8	14"	14"	8½"	8"	25	25'- 0"	25	25'- 0"	6	6'- 0"	4	9"	25'-9"	4	9"	27'- 1"	--	---	-----	-----	5	9"	2'- 6"	5'- 10"	8'- 0"	5	6"	10'- 0"	4	12"	10'- 0"
7	4	16½"	16½"	8"	8"	29	29'- 0"	29	29'- 0"	2	2'- 0"	5	9"	29'-11"	5	9"	31'- 0"	--	---	-----	-----	4	9"	2'- 9"	3'- 11"	6'- 4"	4	12"	6'- 5"	4	11½"	6'- 5"
7	6	16"	16"	8"	8"	29	29'- 0"	29	29'- 0"	4	4'- 0"	5	9"	29'-11"	5	9"	31'- 0"	--	---	-----	-----	4	9"	2'- 9"	4'- 10"	7'- 4"	5	12"	8'- 3"	4	11½"	8'- 3"
7	8	15¾"	15¾"	8"	8"	29	29'- 0"	29	29'- 0"	6	6'- 0"	5	9"	29'-11"	5	9"	31'- 0"	3	9"	3'- 9"	7'- 4"	4	9"	2'- 9"	5'- 10"	8'- 4"	5	6"	10'- 3"	4	11½"	10'- 3"
7	10	15¾"	15¾"	10½"	8"	29	29'- 0"	29	29'- 0"	8	8'- 0"	5	9"	30'-1"	5	9"	31'- 5"	3	9"	4'- 2"	8'- 2"	5	9"	2'- 11"	7'- 0"	9'- 6"	6	6½"	12'- 3"	4	12"	12'- 3"
8	4	18½"	18½"	8"	8"	33	33'- 0"	33	33'- 0"	2	2'- 0"	5	9"	33'-11"	5	9"	35'- 0"	--	---	-----	-----	4	9"	2'- 9"	4'- 1"	6'- 6"	4	12"	6'- 9"	4	10½"	6'- 9"
8	6	18"	18"	8"	8"	33	33'- 0"	33	33'- 0"	4	4'- 0"	5	8"	33'-11"	5	8"	35'- 0"	--	---	-----	-----	4	8"	2'- 9"	5'- 0"	7'- 6"	5	12"	8'- 7"	4	10½"	8'- 7"
8	8	17¾"	17¾"	8"	8"	33	33'- 0"	33	33'- 0"	6	6'- 0"	5	8"	33'-11"	5	8"	35'- 0"	3	8"	3'- 11"	7'- 8"	4	8"	2'- 9"	6'- 0"	8'- 6"	5	6"	10'- 7"	4	10½"	10'- 7"
8	10	18"	18"	10½"	8"	33	33'- 0"	33	33'- 0"	8	8'- 0"	5	8"	34'-1"	5	8"	35'- 4"	3	8"	4'- 4"	8'- 6"	5	8"	2'- 11"	7'- 2"	9'- 9"	6	8	12'- 7"	4	10½"	12'- 7"
9	4	20½"	20½"	8"	8"	37	37'- 0"	37	37'- 0"	2	2'- 0"	6	9"	37'-11"	6	9"	39'- 0"	--	---	-----	-----	4	9"	3'- 2"	4'- 3"	7'- 1"	4	12"	7'- 0"	4	10"	7'- 0"
9	6	20½"	20½"	8"	8"	37	37'- 0"	37	37'- 0"	4	4'- 0"	6	9"	37'-11"	6	9"	39'- 0"	--	---	-----	-----	4	9"	3'- 2"	5'- 3"	8'- 1"	5	12"	9'- 0"	4	10"	9'- 0"
9	8	20"	20"	8"	8"	37	37'- 0"	37	37'- 0"	6	6'- 0"	6	9"	37'-8"	6	9"	39'- 0"	--	---	-----	-----	5	9"	3'- 4"	6'- 5"	9'- 4"	5	6"	11'- 0"	4	10"	11'- 0"
9	10	20"	20"	10½"	8"	37	37'- 0"	37	37'- 0"	8	8'- 0"	6	9"	37'-10"	6	9"	39'- 4"	--	---	-----	-----	6	9"	3'- 5"	7'- 6"	10'- 6"	6	9"	13'- 0"	4	10"	13'- 0"
9	12	20"	20"	13"	8"	37	37'- 0"	37	37'- 0"	10	10'- 0"	6	9"	38'-0"	6	9"	39'- 9"	3	9"	4'- 11"	9'- 8"	7	9"	3'- 7"	8'- 9"	11'- 10"	7	10½"	15'- 0"	4	10"	15'- 0"
10	4	22½"	22½"	8"	8"	41	41'- 0"	41	41'- 0"	2	2'- 0"	6	9"	41'-11"	6	9"	43'- 0"	--	---	-----	-----	4	9"	3'- 2"	4'- 5"	7'- 3"	4	12"	7'- 5"	4	10"	7'- 5"
10	6	22½"	22½"	8"	8"	41	41'- 0"	41	41'- 0"	4	4'- 0"	6	9"	41'-11"	6	9"	43'- 0"	--	---	-----	-----	4	9"	3'- 2"	5'- 5"	8'- 3"	5	12"	9'- 4"	4	10"	9'- 4"
10	8	22½"	22½"	8"	8"	41	41'- 0"	41	41'- 0"	6	6'- 0"	6	9"	41'-11"	6	9"	43'- 0"	3	9"	4'- 4"	8'- 6"	4	9"	3'- 2"	6'- 5"	9'- 3"	6	9"	11'- 4"	4	10"	11'- 4"
10	10	22½"	22½"	10"	8"	41	41'- 0"	41	41'- 0"	8	8'- 0"	7	9"	41'-9"	6	9"	43'- 3"	--	---	-----	-----	6	9"	4'- 1"	7'- 9"	11'- 5"	6	6"	13'- 4"	4	10"	13'- 4"
10	12	22½"	22½"	12½"	8"	41	41'- 0"	41	41'- 0"	10	10'- 0"	6	9"	42'-2"	6	9"	43'- 9"	3	9"	5'- 2"	10'- 1"	6	9"	3'- 5"	8'- 9"	11'- 9"	6	7½"	15'- 4"	4	9"	15'- 4"
12	6	27"	27"	8"	8"	49	49'- 0"	49	49'- 0"	4	4'- 0"	6	8"	49'-11"	6	8"	51'- 0"	--	---	-----	-----	4	8"	3'- 2"	5'- 9"	8'- 8"	5	11"	10'- 1"	4	9"	10'- 1"
12	8	27"	27"	8"	8"	49	49'- 0"	49	49'- 0"	6	6'- 0"	6	8"	49'-11"	6	8"	51'- 0"	--	---	-----	-----	4	8"	3'- 2"	6'- 9"	9'- 8"	5	5½"	12'- 1"	4	9"	12'- 1"
12	10	27"	27"	9"	8"	49	49'- 0"	49	49'- 0"	8	8'- 0"	6	8"	49'-10"	6	8"	51'- 1"	3	8"	5'- 2"	10'- 0"	5	8"	3'- 4"	7'- 11"	10'- 11"	7	8"	14'- 1"	4	9"	14'- 1"
12	12	27"	27"	12"	8"	49	49'- 0"	49	49'- 0"	10	10'- 0"	6	8"	50'-4"	6	8"	51'- 7"	4	8"	5'- 6"	10'- 9"	5	8"	3'- 4"	8'- 11"	11'- 11"	5	5"	16'- 2"	4	9"	16'- 2"

A COPY OF THE ORIGINAL SEALED AND SIGNED DRAWING IS ON FILE IN THE CENTRAL OFFICE

VDOT
ROAD AND BRIDGE STANDARDS

SHEET 1 OF 2

1005.15

REVISION DATE
07/11

QUADRUPLE BOX CULVERTS

30 TO 40 FT. FILLS

VIRGINIA DEPARTMENT OF TRANSPORTATION

SPECIFICATION REFERENCE

BCQ-40

FOR TYPICAL SECTION, NOTES AND OTHER DETAILS, REFER TO STANDARD BCQ-DT.

SPAN (FT.)	HGHT (FT.)	REINFORCING STEEL BT1 SIZE	SPACING C-C	a	b	c	d	e	f	g	LENGTH	NO. BL1 #4 BARS	NO. BL2 #3 BARS	REINFORCING STEEL (LBS/LONG. JT)	QUAN./LF CONCRETE CLASS A4 (CY/LF)	REINFORCING STEEL (LBS/LF)	HEADWALLS G HEADWALL LENGTH	HW1 SIZE	HW1 LENGTH	NO. HW2 BARS	NO. HW3 BARS	INLET CONCRETE CL. A4 (CY)	INLET REINFORCING STEEL (LBS)	OUTLET CONCRETE CL. A4 (CY)	OUTLET REINFORCING STEEL (LBS)	WINGWALL
3	3	4	12"	2'- 7"	0'- 4"	1'- 10"	0'- 5 1/8"	0'- 3 1/4"	15'- 0"	1'- 3"	15'- 7"	60	20	57.160	1.283	151.587	16'-10"	6	16'- 6"	3	12	2.222	137.876	2.191	99.132	A
3	4	4	12"	2'- 7"	0'- 4"	1'- 10"	0'- 5 1/8"	0'- 3 1/4"	15'- 0"	1'- 3"	15'- 7"	60	30	60.690	1.406	158.132	16'-10"	6	16'- 6"	3	15	2.333	148.230	2.284	99.132	C
4	3	4	12"	3'- 3"	0'- 6"	2'- 3"	0'- 8"	0'- 5 1/4"	19'- 0"	1'- 6"	20'- 0"	76	20	70.520	1.717	170.567	20'-10"	6	20'- 6"	3	12	2.565	161.908	2.547	123.164	B
4	4	4	12"	3'- 3"	0'- 5 3/4"	2'- 3"	0'- 7 5/8"	0'- 5"	19'- 0"	1'- 6"	20'- 0"	76	30	74.050	1.810	180.660	20'-10"	6	20'- 6"	3	15	2.686	172.262	2.650	123.164	D
4	5	4	12"	3'- 3"	0'- 5 3/4"	2'- 3"	0'- 7 5/8"	0'- 5"	19'- 0"	1'- 6"	20'- 0"	76	40	77.580	1.933	191.100	20'-10"	6	20'- 6"	3	18	2.798	182.616	2.743	123.164	F
4	6	4	12"	3'- 3"	0'- 5 3/4"	2'- 3"	0'- 7 5/8"	0'- 5"	19'- 0"	1'- 6"	20'- 0"	76	50	81.110	2.054	221.508	20'-10"	6	20'- 6"	3	21	2.909	192.970	2.835	123.164	H
5	3	4	11"	3'- 10"	0'- 8"	2'- 8"	0'- 10 7/8"	0'- 7 1/4"	23'- 0"	1'- 9"	24'- 5"	92	20	83.880	2.249	209.714	24'-10"	6	24'- 6"	3	12	2.840	185.940	2.836	147.196	B
5	4	4	11"	3'- 10"	0'- 8"	2'- 8"	0'- 10 7/8"	0'- 7 1/4"	23'- 0"	1'- 9"	24'- 5"	92	30	87.410	2.372	220.276	24'-10"	6	24'- 6"	3	15	2.951	196.294	2.928	147.196	D
5	5	4	11"	3'- 10"	0'- 7 3/4"	2'- 8"	0'- 10 1/2"	0'- 7"	23'- 0"	1'- 9"	24'- 5"	92	40	90.940	2.459	230.479	24'-10"	6	24'- 6"	3	18	3.076	206.648	3.034	147.196	F
5	6	4	11"	3'- 10"	0'- 7 3/4"	2'- 8"	0'- 10 1/2"	0'- 7"	23'- 0"	1'- 9"	24'- 5"	92	50	94.470	2.580	256.318	24'-10"	6	24'- 6"	3	21	3.187	217.002	3.127	147.196	H
5	7	4	11"	3'- 10"	0'- 7 3/4"	2'- 8"	0'- 10 1/2"	0'- 7"	23'- 0"	1'- 9"	24'- 5"	92	60	98.000	2.701	283.434	24'-10"	6	24'- 6"	3	24	3.298	227.356	3.220	147.196	J
6	4	4	9"	4'- 6"	0'- 10"	3'- 0"	1'- 5 6"	0'- 9 1/4"	27'- 0"	2'- 1"	28'- 10"	108	30	100.770	3.001	281.508	28'-10"	6	28'- 6"	3	15	3.193	220.326	3.183	171.228	D
6	5	4	9"	4'- 6"	0'- 10"	3'- 0"	1'- 5 6"	0'- 9 1/4"	27'- 0"	2'- 1"	28'- 10"	108	40	104.300	3.124	292.393	28'-10"	6	28'- 6"	3	18	3.304	230.680	3.276	171.228	F
6	6	4	9"	4'- 6"	0'- 10"	3'- 0"	1'- 5 6"	0'- 9 1/4"	27'- 0"	2'- 1"	28'- 10"	108	50	107.830	3.246	309.279	28'-10"	6	28'- 6"	3	21	3.416	241.034	3.369	171.228	H
6	7	4	9"	4'- 6"	0'- 10"	3'- 0"	1'- 5 6"	0'- 9 1/4"	27'- 0"	2'- 1"	28'- 10"	108	60	111.360	3.367	341.882	28'-10"	6	28'- 6"	3	24	3.511	251.388	3.445	171.228	J
6	8	4	9"	4'- 7"	0'- 10"	3'- 0"	1'- 5 6"	0'- 9 1/4"	27'- 1"	2'- 1"	28'- 11"	108	70	114.890	3.520	370.070	28'-10"	6	28'- 6"	3	27	3.622	261.742	3.538	171.228	L
7	4	5	9"	5'- 1"	1'- 1/2"	3'- 5"	1'- 5 1/8"	0'- 11 5/8"	31'- 0"	2'- 3"	33'- 4"	124	30	114.130	3.820	414.276	32'-10"	6	32'- 6"	3	15	3.391	244.358	3.395	195.260	E
7	6	5	9"	5'- 2"	1'- 0"	3'- 5"	1'- 4 3/8"	0'- 11 1/8"	31'- 0"	2'- 4"	33'- 3"	124	50	121.190	3.968	441.749	32'-10"	6	32'- 6"	3	21	3.614	265.066	3.580	195.260	I
7	8	5	9"	5'- 2"	0'- 11 3/4"	3'- 5"	1'- 4"	0'- 10 7/8"	31'- 0"	2'- 5"	33'- 2"	124	70	128.250	4.162	500.982	32'-10"	6	32'- 6"	3	27	3.836	285.774	3.766	195.260	M
7	10	5	9"	5'- 5"	0'- 11 3/4"	3'- 5"	1'- 4"	0'- 10 7/8"	31'- 5"	2'- 5"	33'- 7"	124	90	135.310	4.599	567.669	32'-10"	6	32'- 6"	3	33	4.020	306.482	3.912	195.260	Q
8	4	5	9"	5'- 9"	1'- 2 1/2"	3'- 10"	1'- 7 7/8"	1'- 1 5/8"	35'- 0"	2'- 6"	37'- 9"	140	30	127.490	4.660	464.611	36'-10"	6	36'- 6"	3	15	3.521	268.390	3.538	219.292	E
8	6	5	8"	5'- 9"	1'- 2"	3'- 10"	1'- 7 1/8"	1'- 1 1/8"	35'- 0"	2'- 7"	37'- 8"	140	50	134.550	4.792	533.473	36'-10"	6	36'- 6"	3	21	3.744	289.098	3.723	219.292	I
8	8	5	8"	5'- 10"	1'- 1 3/4"	3'- 10"	1'- 6 7/8"	1'- 7/8"	35'- 0"	2'- 8"	37'- 7"	140	70	141.610	4.980	597.180	36'-10"	6	36'- 6"	3	27	3.966	309.806	3.909	219.292	M
8	10	5	8"	6'- 0"	1'- 2"	3'- 10"	1'- 7 1/8"	1'- 1 1/8"	35'- 4"	2'- 7"	38'- 1"	140	90	148.670	5.477	658.739	36'-10"	6	36'- 6"	3	33	4.149	330.514	4.054	219.292	Q
9	4	6	9"	6'- 5"	1'- 4 1/2"	4'- 3"	1'- 10 5/8"	1'- 3 1/2"	39'- 0"	2'- 10"	42'- 1"	156	30	140.850	5.587	661.124	40'-10"	6	40'- 6"	3	15	3.576	292.422	3.606	243.324	E
9	6	6	9"	6'- 5"	1'- 4 1/2"	4'- 3"	1'- 10 5/8"	1'- 3 1/2"	39'- 0"	2'- 10"	42'- 1"	156	50	147.910	5.832	691.310	40'-10"	6	40'- 6"	3	21	3.799	313.130	3.792	243.324	I
9	8	6	9"	6'- 5"	1'- 4"	4'- 3"	1'- 9 7/8"	1'- 3"	39'- 0"	2'- 11"	42'- 0"	156	70	154.970	5.952	756.272	40'-10"	6	40'- 6"	3	27	4.022	333.838	3.977	243.324	M
9	10	6	9"	6'- 8"	1'- 4"	4'- 3"	1'- 9 7/8"	1'- 3"	39'- 4"	2'- 11"	42'- 5"	156	90	162.030	6.400	816.084	40'-10"	6	40'- 6"	3	33	4.203	354.546	4.122	243.324	Q
9	12	6	9"	6'- 10"	1'- 4"	4'- 3"	1'- 9 7/8"	1'- 3"	39'- 9"	2'- 11"	42'- 10"	156	110	169.090	6.907	919.136	40'-10"	6	40'- 6"	3	39	4.279	375.254	4.159	243.324	U
10	4	6	9"	7'- 0"	1'- 6 1/2"	4'- 8"	2'- 1 3/8"	1'- 5 1/2"	43'- 0"	3'- 1"	46'- 6"	172	30	154.210	6.623	724.174	44'-10"	6	44'- 6"	3	15	3.566	316.454	3.609	267.356	F
10	6	6	9"	7'- 0"	1'- 6 1/2"	4'- 8"	2'- 1 3/8"	1'- 5 1/2"	43'- 0"	3'- 1"	46'- 6"	172	50	161.270	6.868	754.611	44'-10"	6	44'- 6"	3	21	3.788	337.162	3.795	267.356	J
10	8	6	9"	7'- 0"	1'- 6 1/2"	4'- 8"	2'- 1 3/8"	1'- 5 1/2"	43'- 0"	3'- 1"	46'- 6"	172	70	168.330	7.110	818.277	44'-10"	6	44'- 6"	3	27	4.011	357.870	3.980	267.356	N
10	10	7	9"	7'- 2"	1'- 6 1/2"	4'- 8"	2'- 1 1/4"	1'- 5 1/4"	43'- 3"	3'- 1"	46'- 10"	172	90	175.390	7.509	1041.296	44'-10"	6	44'- 6"	3	33	4.192	378.578	4.123	267.356	R
10	12	6	9"	7'- 5"	1'- 6 1/2"	4'- 8"	2'- 1 3/8"	1'- 5 1/2"	43'- 9"	3'- 1"	47'- 3"	172	110	182.450	8.030	960.092	44'-10"	6	44'- 6"	3	39	4.264	399.286	4.157	267.356	V
12	6	6	8"	8'- 3"	1'- 11"	5'- 5"	2'- 7 3/4"	1'- 10"	51'- 0"	3'- 7"	55'- 5"	204	50	187.990	9.388	971.858	52'-10"	6	52'- 6"	3	21	3.684	385.226	3.717	315.420	J
12	8	6	8"	8'- 3"	1'- 11"	5'- 5"	2'- 7 3/4"	1'- 10"	51'- 0"	3'- 7"	55'- 5"	204	70	195.050	9.631	1026.313	52'-10"	6	52'- 6"	3	27	3.907	405.934	3.902	315.420	N
12	10	6	8"	8'- 4"	1'- 11"	5'- 5"	2'- 7 3/4"	1'- 10"	51'- 1"	3'- 7"	55'- 7"	204	90	202.110	9.959	1128.892	52'-10"	6	52'- 6"	3	33	4.085	426.642	4.043	315.420	R
12	12	6	8"	8'- 7"	1'- 11"	5'- 5"	2'- 7 3/4"	1'- 10"	51'- 7"	3'- 7"	56'- 1"	204	110	209.170	10.521	1174.588	52'-10"	6	52'- 6"	3	39	4.151	447.350	4.071	315.420	V

A COPY OF THE ORIGINAL SEALED AND SIGNED DRAWING IS ON FILE IN THE CENTRAL OFFICE.

SPECIFICATION REFERENCE

QUADRUPLE BOX CULVERTS

30 TO 40 FT. FILLS

VIRGINIA DEPARTMENT OF TRANSPORTATION

VDOT

ROAD AND BRIDGE STANDARDS

REVISION DATE 07/11

SHEET 2 OF 2

1005.16

BCQ-50

FOR TYPICAL SECTION, NOTES AND OTHER DETAILS, REFER TO STANDARD BCQ-DT.

DIMENSIONS						REINFORCING STEEL																										
SPAN	HGHT	T1	T2	T3	T4							BH1			BH2			BH3				BH4					BV1			BV2		
(FT.)	(FT.)	TOP SLAB	BOTTOM SLAB	EXTERIOR WALL (IN.)	INTERIOR WALL (IN.)	A	B	C	D	E	F	SIZE	SPACING C-C	LENGTH	SIZE	SPACING C-C	LENGTH	SIZE	SPACING C-C	a	LENGTH	SIZE	SPACING C-C	a	b	LENGTH	SIZE	SPACING C-C	LENGTH	SIZE	SPACING C-C	LENGTH
3	3	9"	9"	8"	8"	13	13'- 0"	13	13'- 0"	1	1'- 0"	4	12"	13'- 11"	4	12"	15'- 0"	--	---	-----	-----	4	12"	2'- 4"	2'- 9"	4'- 10"	4	12"	4'- 2"	4	12"	4'- 2"
3	4	9"	9"	8"	8"	13	13'- 0"	13	13'- 0"	2	2'- 0"	4	12"	13'- 11"	4	12"	15'- 0"	--	---	-----	-----	4	12"	2'- 4"	3'- 3"	5'- 4"	4	12"	5'- 2"	4	12"	5'- 2"
4	3	11½"	11½"	8"	8"	17	17'- 0"	17	17'- 0"	1	1'- 0"	4	12"	17'- 11"	4	12"	19'- 0"	--	---	-----	-----	4	12"	2'- 4"	3'- 0"	5'- 0"	4	12"	4'- 7"	4	12"	4'- 7"
4	4	11¼"	11¼"	8"	8"	17	17'- 0"	17	17'- 0"	2	2'- 0"	4	12"	17'- 11"	4	12"	19'- 0"	--	---	-----	-----	4	12"	2'- 4"	3'- 6"	5'- 6"	4	12"	5'- 6"	4	12"	5'- 6"
4	5	11"	11"	8"	8"	17	17'- 0"	17	17'- 0"	3	3'- 0"	4	12"	17'- 11"	4	12"	19'- 0"	--	---	-----	-----	4	12"	2'- 4"	3'- 11"	6'- 0"	5	12"	6'- 6"	4	12"	6'- 6"
4	6	11¼"	11¼"	8"	8"	17	17'- 0"	17	17'- 0"	4	4'- 0"	4	12"	17'- 11"	4	12"	19'- 0"	4	12"	3'- 0"	5'- 9"	4	12"	2'- 4"	4'- 6"	6'- 6"	5	9"	7'- 6"	4	12"	7'- 6"
5	3	13¾"	13¾"	8"	8"	21	21'- 0"	21	21'- 0"	1	1'- 0"	4	10"	21'- 11"	4	10"	23'- 0"	--	---	-----	-----	4	10"	2'- 4"	3'- 2"	5'- 3"	4	12"	4'- 11"	4	12"	4'- 11"
5	4	13½"	13½"	8"	8"	21	21'- 0"	21	21'- 0"	2	2'- 0"	4	9"	21'- 11"	4	9"	23'- 0"	--	---	-----	-----	4	9"	2'- 4"	3'- 8"	5'- 8"	4	12"	5'- 11"	4	12"	5'- 11"
5	5	13½"	13½"	8"	8"	21	21'- 0"	21	21'- 0"	3	3'- 0"	4	9"	21'- 11"	4	9"	23'- 0"	--	---	-----	-----	4	9"	2'- 4"	4'- 2"	6'- 2"	5	12"	6'- 11"	4	12"	6'- 11"
5	6	13½"	13½"	8"	8"	21	21'- 0"	21	21'- 0"	4	4'- 0"	4	10"	21'- 11"	4	10"	23'- 0"	3	10"	3'- 2"	6'- 2"	4	10"	2'- 4"	4'- 8"	6'- 8"	5	10"	7'- 11"	4	12"	7'- 11"
5	7	13½"	13½"	8½"	8"	21	21'- 0"	21	21'- 0"	5	5'- 0"	4	10"	21'- 9"	4	10"	23'- 1"	--	---	-----	-----	5	10"	2'- 6"	5'- 4"	7'- 5"	6	10½"	8'- 11"	4	12"	8'- 11"
6	4	16½"	16½"	8"	8"	25	25'- 0"	25	25'- 0"	2	2'- 0"	4	9"	25'- 11"	5	9"	27'- 0"	--	---	-----	-----	4	9"	2'- 4"	3'- 11"	5'- 11"	4	12"	6'- 5"	4	11"	6'- 5"
6	5	16½"	16½"	8"	8"	25	25'- 0"	25	25'- 0"	3	3'- 0"	4	9"	25'- 11"	5	9"	27'- 0"	--	---	-----	-----	4	9"	2'- 4"	4'- 5"	6'- 5"	5	12"	7'- 5"	4	11"	7'- 5"
6	6	16½"	16½"	8"	8"	25	25'- 0"	25	25'- 0"	4	4'- 0"	4	9"	25'- 11"	5	9"	27'- 0"	--	---	-----	-----	4	9"	2'- 4"	4'- 11"	6'- 11"	5	9½"	8'- 4"	4	11"	8'- 4"
6	7	16"	16"	8"	8"	25	25'- 0"	25	25'- 0"	5	5'- 0"	4	9"	25'- 11"	5	9"	27'- 0"	3	9"	3'- 7"	7'- 0"	4	9"	2'- 4"	5'- 4"	7'- 5"	5	6½"	9'- 3"	4	11"	9'- 3"
6	8	16"	16"	9½"	8"	25	25'- 0"	25	25'- 0"	6	6'- 0"	4	9"	25'- 11"	5	9"	27'- 3"	--	---	-----	-----	5	9"	2'- 6"	6'- 0"	8'- 2"	5	5"	10'- 3"	4	11"	10'- 3"
7	4	19"	19"	8"	8"	29	29'- 0"	29	29'- 0"	2	2'- 0"	5	8"	29'- 11"	5	8"	31'- 0"	--	---	-----	-----	4	8"	2'- 9"	4'- 2"	6'- 7"	4	12"	6'- 10"	4	10"	6'- 10"
7	6	18½"	18½"	8"	8"	29	29'- 0"	29	29'- 0"	4	4'- 0"	5	8"	29'- 11"	5	8"	31'- 0"	--	---	-----	-----	4	8"	2'- 9"	5'- 1"	7'- 6"	5	9½"	8'- 9"	4	10"	8'- 9"
7	8	18½"	18½"	9½"	8"	29	29'- 0"	29	29'- 0"	6	6'- 0"	5	9"	29'- 11"	5	9"	31'- 3"	--	---	-----	-----	5	9"	2'- 11"	6'- 3"	8'- 9"	6	7½"	10'- 9"	4	10"	10'- 9"
7	10	18"	18"	11½"	8"	29	29'- 0"	29	29'- 0"	8	8'- 0"	5	9"	30'- 3"	5	9"	31'- 7"	4	9"	4'- 4"	8'- 5"	5	9"	2'- 11"	7'- 2"	9'- 9"	7	9"	12'- 7"	4	10"	12'- 7"
8	4	21"	21"	8"	8"	33	33'- 0"	33	33'- 0"	2	2'- 0"	6	9"	33'- 11"	5	9"	35'- 0"	--	---	-----	-----	4	9"	3'- 2"	4'- 3"	7'- 2"	4	12"	7'- 2"	4	10"	7'- 2"
8	6	21"	21"	8"	8"	33	33'- 0"	33	33'- 0"	4	4'- 0"	6	9"	33'- 11"	5	9"	35'- 0"	--	---	-----	-----	4	9"	3'- 2"	5'- 3"	8'- 2"	5	9"	9'- 1"	4	10"	9'- 1"
8	8	21"	21"	9"	8"	33	33'- 0"	33	33'- 0"	6	6'- 0"	6	9"	33'- 10"	5	9"	35'- 1"	--	---	-----	-----	5	9"	3'- 4"	6'- 5"	9'- 5"	5	4½"	11'- 1"	4	10"	11'- 1"
8	10	20½"	20½"	11½"	8"	33	33'- 0"	33	33'- 0"	8	8'- 0"	6	9"	34'- 0"	5	9"	35'- 6"	--	---	-----	-----	6	9"	3'- 5"	7'- 7"	10'- 7"	7	9"	13'- 0"	4	10"	13'- 0"
9	4	23½"	23½"	8"	8"	37	37'- 0"	37	37'- 0"	2	2'- 0"	6	9"	37'- 11"	6	9"	39'- 0"	--	---	-----	-----	4	9"	3'- 2"	4'- 6"	7'- 4"	4	12"	7'- 7"	4	10"	7'- 7"
9	6	23½"	23½"	8"	8"	37	37'- 0"	37	37'- 0"	4	4'- 0"	6	9"	37'- 11"	6	9"	39'- 0"	--	---	-----	-----	4	9"	3'- 2"	5'- 6"	8'- 4"	5	8"	9'- 6"	4	10"	9'- 6"
9	8	23"	23"	8½"	8"	37	37'- 0"	37	37'- 0"	6	6'- 0"	6	9"	37'- 9"	6	9"	39'- 0"	--	---	-----	-----	5	9"	3'- 4"	6'- 8"	9'- 7"	6	7½"	11'- 6"	4	10"	11'- 6"
9	10	23"	23"	11½"	8"	37	37'- 0"	37	37'- 0"	8	8'- 0"	6	9"	38'- 0"	6	9"	39'- 6"	--	---	-----	-----	6	9"	3'- 5"	7'- 9"	10'- 9"	6	6"	13'- 6"	4	10"	13'- 6"
9	12	23"	23"	14"	8"	37	37'- 0"	37	37'- 0"	10	10'- 0"	6	9"	38'- 2"	6	9"	40'- 0"	3	9"	5'- 2"	10'- 2"	7	9"	3'- 7"	9'- 0"	12'- 1"	6	7"	15'- 6"	4	10"	15'- 6"
10	4	26"	26"	8"	8"	41	41'- 0"	41	41'- 0"	2	2'- 0"	7	9"	41'- 11"	6	9"	43'- 0"	--	---	-----	-----	4	9"	3'- 10"	4'- 8"	8'- 3"	4	12"	8'- 0"	4	9"	8'- 0"
10	6	26"	26"	8"	8"	41	41'- 0"	41	41'- 0"	4	4'- 0"	6	9"	41'- 11"	6	9"	43'- 0"	--	---	-----	-----	4	9"	3'- 2"	5'- 8"	8'- 7"	5	8"	10'- 0"	4	9"	10'- 0"
10	8	26"	26"	8"	8"	41	41'- 0"	41	41'- 0"	6	6'- 0"	6	9"	41'- 11"	6	9"	43'- 0"	3	9"	4'- 8"	9'- 1"	4	9"	3'- 2"	6'- 8"	9'- 7"	5	4½"	12'- 0"	4	9"	12'- 0"
10	10	26"	26"	11"	8"	41	41'- 0"	41	41'- 0"	8	8'- 0"	6	9"	42'- 2"	6	9"	43'- 6"	3	9"	5'- 0"	9'- 10"	5	9"	3'- 4"	7'- 10"	10'- 10"	6	6"	14'- 0"	4	9"	14'- 0"
10	12	26"	26"	14"	8"	41	41'- 0"	41	41'- 0"	10	10'- 0"	6	9"	42'- 5"	6	9"	44'- 0"	3	9"	5'- 5"	10'- 8"	6	9"	3'- 5"	9'- 0"	12'- 0"	7	9½"	16'- 0"	4	9"	16'- 0"
12	6	31"	31"	8"	8"	49	49'- 0"	49	49'- 0"	4	4'- 0"	7	9"	49'- 11"	7	9"	51'- 0"	--	---	-----	-----	4	9"	3'- 10"	6'- 2"	9'- 8"	5	7"	10'- 10"	4	7½"	10'- 10"
12	8	30½"	30½"	8"	8"	49	49'- 0"	49	49'- 0"	6	6'- 0"	7	9"	49'- 11"	7	9"	51'- 0"	3	9"	5'- 0"	9'- 10	4	9"	3'- 10"	7'- 1"	10'- 7"	6	6½"	12'- 8"	4	7½"	12'- 8"
12	10	30½"	30½"	9¾"	8"	49	49'- 0"	49	49'- 0"	8	8'- 0"	7	9"	49'- 8"	7	9"	51'- 3"	--	---	-----	-----	6	9"	4'- 1"	8'- 5"	12'- 1"	7	8"	14'- 8"	4	7½"	14'- 8"
12	12	31"	31"	13"	8"	49	49'- 0"	49	49'- 0"	10	10'- 0"	7	8"	50'- 3"	7	8"	51'- 9"	3	8"	5'- 10"	11'- 6"	6	8"	4'- 1"	9'- 5"	13'- 1"	9	12"	16'- 10"	4	7½"	16'- 10"

A COPY OF THE ORIGINAL SEALED AND SIGNED DRAWING IS ON FILE IN THE CENTRAL OFFICE

VDOT
ROAD AND BRIDGE STANDARDS

SHEET 1 OF 2 | REVISION DATE
1005.17 | 07/11

QUADRUPLE BOX CULVERTS

40 TO 50 FT. FILLS

VIRGINIA DEPARTMENT OF TRANSPORTATION

SPECIFICATION REFERENCE

BCQ-50

FOR TYPICAL SECTION, NOTES AND OTHER DETAILS, REFER TO STANDARD BCQ-DT.

SPAN (FT.)	HGHT (FT.)	REINFORCING STEEL BT1 SIZE	SPACING c-c	a	b	c	d	e	f	g	LENGTH	NO. BL1 #4 BARS	NO. BL2 #3 BARS	REINFORCING STEEL (LBS/LONG. JT)	QUAN./LF CONCRETE CLASS A4 (CY/LF)	REINFORCING STEEL (LBS/LF)	HEADWALLS G HEADWALL LENGTH	HW1 SIZE	HW1 LENGTH	NO. HW2 BARS	NO. HW3 BARS	INLET CONCRETE CL. A4 (CY)	INLET REINFORCING STEEL (LBS)	OUTLET CONCRETE CL. A4 (CY)	OUTLET REINFORCING STEEL (LBS)	WINGWALL
3	3	4	12"	2'- 6"	0'- 5"	1'- 10"	0'- 6⅝"	0'- 4¼"	15'- 0"	1'- 1"	15'- 10"	60	20	57.160	1.378	142.459	16'-10"	6	16'- 6"	3	12	2.194	137.876	2.163	99.132	A
3	4	4	12"	2'- 6"	0'- 5"	1'- 10"	0'- 6⅝"	0'- 4¼"	15'- 0"	1'- 1"	15'- 10"	60	30	60.690	1.501	152.899	16'-10"	6	16'- 6"	3	15	2.305	148.230	2.256	99.132	C
4	3	4	12"	3'- 1"	0'- 7½"	2'- 3"	0'- 10⅛"	0'- 6¾"	19'- 0"	1'- 3"	20'- 4"	76	20	70.520	1.896	172.650	20'-10"	6	20'- 6"	3	12	2.525	161.908	2.507	123.164	B
4	4	4	12"	3'- 1"	0'- 7¼"	2'- 3"	0'- 9¾"	0'- 6½"	19'- 0"	1'- 3"	20'- 3"	76	30	74.050	1.989	182.743	20'-10"	6	20'- 6"	3	15	2.626	172.262	2.590	123.164	D
4	5	4	12"	3'- 2"	0'- 7"	2'- 3"	0'- 9⅜"	0'- 6¼"	19'- 0"	1'- 4"	20'- 3"	76	40	77.580	2.082	197.711	20'-10"	6	20'- 6"	3	18	2.747	182.616	2.693	123.164	F
4	6	4	12"	3'- 1"	0'- 7¼"	2'- 3"	0'- 9¾"	0'- 6½"	19'- 0"	1'- 3"	20'- 3"	76	50	81.110	2.232	229.690	20'-10"	6	20'- 6"	3	21	2.849	192.970	2.775	123.164	H
5	3	4	10"	3'- 8"	0'- 9¾"	2'- 8"	1'- 1¼"	0'- 9"	23'- 0"	1'- 5"	24'- 10"	92	20	83.880	2.500	223.900	24'-10"	6	24'- 6"	3	12	2.774	185.940	2.770	147.196	B
5	4	4	9"	3'- 9"	0'- 9½"	2'- 8"	1'- 1"	0'- 8¾"	23'- 0"	1'- 6"	24'- 9"	92	30	87.410	2.586	248.666	24'-10"	6	24'- 6"	3	15	2.886	196.294	2.863	147.196	D
5	5	4	9"	3'- 9"	0'- 9½"	2'- 8"	1'- 1"	0'- 8¾"	23'- 0"	1'- 6"	24'- 9"	92	40	90.940	2.708	264.739	24'-10"	6	24'- 6"	3	18	2.997	206.648	2.955	147.196	F
5	6	4	10"	3'- 9"	0'- 9½"	2'- 8"	1'- 1"	0'- 8¾"	23'- 0"	1'- 6"	24'- 9"	92	50	94.470	2.831	275.931	24'-10"	6	24'- 6"	3	21	3.108	217.002	3.048	147.196	H
5	7	4	10"	3'- 9"	0'- 9½"	2'- 8"	1'- 1"	0'- 8¾"	23'- 1"	1'- 6"	24'- 10"	92	60	98.000	2.981	299.076	24'-10"	6	24'- 6"	3	24	3.220	227.356	3.141	147.196	J
6	4	4	9"	4'- 4"	1'- ½"	3'- 0"	1'- 5⅛"	0'- 11¾"	27'- 0"	1'- 8"	29'- 4"	108	30	100.770	3.420	314.735	28'-10"	6	28'- 6"	3	15	3.082	220.326	3.072	171.228	E
6	5	4	9"	4'- 4"	1'- ½"	3'- 0"	1'- 5⅛"	0'- 11¾"	27'- 0"	1'- 8"	29'- 4"	108	40	104.300	3.542	331.548	28'-10"	6	28'- 6"	3	18	3.193	230.680	3.165	171.228	G
6	6	4	9"	4'- 4"	1'- ½"	3'- 0"	1'- 5⅛"	0'- 11¾"	27'- 0"	1'- 8"	29'- 4"	108	50	107.830	3.665	348.168	28'-10"	6	28'- 6"	3	21	3.305	241.034	3.258	171.228	I
6	7	4	9"	4'- 4"	1'- 0"	3'- 0"	1'- 4½"	0'- 11¼"	27'- 0"	1'- 9"	29'- 3"	108	60	111.360	3.701	385.056	28'-10"	6	28'- 6"	3	24	3.400	251.388	3.334	171.228	K
6	8	4	9"	4'- 6"	1'- 0"	3'- 0"	1'- 4½"	0'- 11¼"	27'- 3"	1'- 9"	29'- 6"	108	70	114.890	3.921	414.988	28'-10"	6	28'- 6"	3	27	3.544	261.742	3.460	171.228	M
7	4	5	8"	4'- 11"	1'- 3"	3'- 5"	1'- 8⅝"	1'- 2⅛"	31'- 0"	1'- 10"	33'- 10"	124	30	114.130	4.300	458.908	32'-10"	6	32'- 6"	3	15	3.217	244.358	3.221	195.260	E
7	6	5	8"	4'- 11"	1'- 2½"	3'- 5"	1'- 7⅞"	1'- 1⅝"	31'- 0"	1'- 11"	33'- 9"	124	50	121.190	4.448	493.091	32'-10"	6	32'- 6"	3	21	3.459	265.066	3.426	195.260	I
7	8	5	9"	5'- 1"	1'- 2½"	3'- 5"	1'- 7⅞"	1'- 1⅝"	31'- 3"	1'- 11"	34'- 0"	124	70	128.250	4.795	525.762	32'-10"	6	32'- 6"	3	27	3.682	285.774	3.611	195.260	M
7	10	5	9"	5'- 3"	1'- 2"	3'- 5"	1'- 7⅞"	1'- 1⅛"	31'- 7"	2'- 0"	34'- 3"	124	90	135.310	5.118	597.629	32'-10"	6	32'- 6"	3	33	3.746	306.482	3.637	195.260	Q
8	4	6	9"	5'- 7"	1'- 5"	3'- 10"	1'- 11¼"	1'- 4"	35'- 0"	2'- 2"	38'- 3"	140	30	127.490	5.198	560.606	36'-10"	6	36'- 6"	3	15	3.275	268.390	3.292	219.292	E
8	6	6	9"	5'- 7"	1'- 5"	3'- 10"	1'- 11¼"	1'- 4"	35'- 0"	2'- 2"	38'- 3"	140	50	134.550	5.442	597.229	36'-10"	6	36'- 6"	3	21	3.498	289.098	3.477	219.292	I
8	8	6	9"	5'- 8"	1'- 5"	3'- 10"	1'- 11¼"	1'- 4"	35'- 1"	2'- 2"	38'- 5"	140	70	141.610	5.754	674.797	36'-10"	6	36'- 6"	3	27	3.743	309.806	3.685	219.292	M
8	10	6	9"	5'- 11"	1'- 4½"	3'- 10"	1'- 10⅝"	1'- 3½"	35'- 6"	2'- 3"	38'- 8"	140	90	148.670	6.106	736.173	36'-10"	6	36'- 6"	3	33	3.822	330.514	3.726	219.292	Q
9	4	6	9"	6'- 2"	1'- 7½"	4'- 3"	2'- 2⅞"	1'- 6½"	39'- 0"	2'- 4"	42'- 9"	156	30	140.850	6.315	667.572	40'-10"	6	40'- 6"	3	15	3.289	292.422	3.319	243.324	F
9	6	6	9"	6'- 2"	1'- 7½"	4'- 3"	2'- 2⅞"	1'- 6½"	39'- 0"	2'- 4"	42'- 9"	156	50	147.910	6.559	708.128	40'-10"	6	40'- 6"	3	21	3.512	313.130	3.505	243.324	J
9	8	6	9"	6'- 3"	1'- 7"	4'- 3"	2'- 2⅛"	1'- 6"	39'- 0"	2'- 5"	42'- 9"	156	70	154.970	6.716	772.935	40'-10"	6	40'- 6"	3	27	3.760	333.838	3.716	243.324	N
9	10	6	9"	6'- 6"	1'- 7"	4'- 3"	2'- 2⅛"	1'- 6"	39'- 6"	2'- 5"	43'- 3"	156	90	162.030	7.219	854.017	40'-10"	6	40'- 6"	3	33	3.835	354.546	3.752	243.324	R
9	12	6	9"	6'- 8"	1'- 7"	4'- 3"	2'- 2⅛"	1'- 6"	40'- 0"	2'- 5"	43'- 8"	156	110	169.090	7.747	939.496	40'-10"	6	40'- 6"	3	39	3.941	375.254	3.820	243.324	V
10	4	7	9"	6'- 9"	1'- 10"	4'- 8"	2'- 6¼"	1'- 8¾"	43'- 0"	2'- 6"	47'- 2"	172	30	154.210	7.549	867.051	44'-10"	6	44'- 6"	3	15	3.280	316.454	3.324	267.356	F
10	6	6	9"	6'- 9"	1'- 10"	4'- 8"	2'- 6⅜"	1'- 9"	43'- 0"	2'- 6"	47'- 3"	172	50	161.270	7.802	778.346	44'-10"	6	44'- 6"	3	21	3.532	337.162	3.538	267.356	J
10	8	6	9"	6'-9"	1'- 10"	4'- 8"	2'- 6⅜"	1'- 9"	43'- 0"	2'- 6"	47'- 3"	172	70	168.330	8.043	853.629	44'-10"	6	44'- 6"	3	27	3.754	357.870	3.723	267.356	N
10	10	6	9"	7'-0"	1'- 10"	4'- 8"	2'- 6⅜"	1'- 9"	43'- 6"	2'- 6"	47'- 9"	172	90	175.390	8.551	921.651	44'-10"	6	44'- 6"	3	33	3.826	378.578	3.756	267.356	R
10	12	6	9"	7'-3"	1'- 10"	4'- 8"	2'- 6⅜"	1'- 9"	44'- 0"	2'- 6"	48'- 3"	172	110	182.450	9.132	981.141	44'-10"	6	44'- 6"	3	39	3.903	399.286	3.796	267.356	V
12	6	7	9"	7'-11"	2'- 3"	5'- 5"	3'- 1⅜"	2'- 1¾"	51'- 0"	2'- 11"	56'- 3"	204	50	187.990	10.642	1154.370	52'-10"	6	52'- 6"	3	21	3.286	385.226	3.319	315.420	K
12	8	7	9"	8'-0"	2'- 2½"	5'- 5"	3'- ⅝"	2'- 1¼"	51'- 0"	3'- 0"	56'- 2"	204	70	195.050	10.724	1228.555	52'-10"	6	52'- 6"	3	27	3.509	405.934	3.504	315.420	O
12	10	7	9"	8'-1"	2'- 2½"	5'- 5"	3'- ⅝"	2'- 1¼"	51'- 3"	3'- 0"	56'- 5"	204	90	202.110	11.128	1309.696	52'-10"	6	52'- 6"	3	33	3.572	426.642	3.529	315.420	S
12	12	7	8"	8'-4"	2'- 3"	5'- 5"	3'- 1⅜"	2'- 1¾"	51'- 9"	2'- 11"	57'- 1"	204	110	209.170	11.884	1519.696	52'-10"	6	52'- 6"	3	39	3.582	447.350	3.500	315.420	W

A COPY OF THE ORIGINAL SEALED AND SIGNED DRAWING IS ON FILE IN THE CENTRAL OFFICE.

SPECIFICATION REFERENCE

QUADRUPLE BOX CULVERTS

40 TO 50 FT. FILLS

VIRGINIA DEPARTMENT OF TRANSPORTATION

VDOT

ROAD AND BRIDGE STANDARDS

REVISION DATE 07/11

SHEET 2 OF 2

1005.18

BCW-11

GENERAL NOTES

Specifications:

AASHTO LRFD Bridge Design Specifications 5th Edition 2010; 2011 Interim Revisions; and VDOT Modifications

Limits of validity for Standard Wingwall design

The standard wingwall designs are based on the following assumptions:

there is no structural connection between the wall and the box culvert
traffic surcharge loading is neglected.

Backfill

Backfill shall comprise granular material with an internal friction angle Φ' of at least 34 °. Cohesive backfill shall not be permitted. Compaction of the backfill material within a distance of one-half the height of the wall shall be by hand compactors only.

Drainage

The Contractor shall provide the drainage system indicated on Sheet 1.

The cost for the drainage system (including porous backfill, 6" diameter non-rigid tubing and other items required) shall be incidental to the cost bid for Concrete.

Concrete

All concrete shall be Class A4.

Reinforcement

Deformed reinforcing bars shall conform to ASTM A615, Grade 60. All reinforcing bar dimensions on the detailed drawings are to centers of bars except where otherwise noted and are subject to fabrication and construction tolerances.

Dimensions on bar diagrams are out-to-out of bars. Bars are straight unless otherwise shown.

The concrete cover to the outermost reinforcement bars shall be as follows:

Wall footing (all faces) 3" minimum cover
Wall stem (all faces) 2½" minimum cover

At the Contractor's option WV Series bars may be spliced at top of the footing in order to facilitate construction. Splice lengths shall be in accordance with Table C on Sheet 1. No additional compensation shall be provided for the increase in reinforcing steel quantity due to the splices.

Miscellaneous

Weepholes shall be placed at the lowest point feasible for free drainage away from the wing.

Four Type I Wings are to be used for straight crossings and skews up to 20°. Two Type I and two Type II Wings are to be used for skews from 25° to 45°. For skews above 45°, special design wings are required. The wingwall to be used for each culvert is shown on the BC series sheets.

The designs shown are applicable for a 45° skew with the roadway and other conditions indicated. Any change in these conditions invalidates these designs.

Quantities shown are for one wing.

WING	Wall Quantities		qr_min ksf High End	qr_min ksf Low End
	Concrete CY	Reinforcement LB		
A	1.7	162	1.10	0.57
B	2.1	193	1.28	0.57
C	2.5	221	1.50	0.57
D	2.7	236	1.68	0.63
E	3.2	265	1.88	0.63
F	3.7	299	2.08	0.63
G	4.1	353	2.13	0.76
H	4.6	382	2.40	0.76
I	5.4	460	2.52	0.84
J	6.2	509	2.65	0.84
K	7.1	619	2.78	1.02
L	7.4	653	2.92	1.02
M	8.1	718	3.18	1.02
N	8.9	922	3.19	1.15
O	9.7	968	3.44	1.15
P	10.7	1117	3.57	1.15
Q	11.5	1240	3.71	1.28
R	12.6	1379	3.84	1.28
S	13.5	1478	4.10	1.28
T	18.0	1815	4.28	1.56
U	18.7	2063	4.42	1.79
V	20.3	2318	4.55	1.79
W	22.3	2619	4.60	1.79
X	25.1	2822	4.74	1.98
Y	26.6	3173	4.95	1.98
Z	28.5	3423	5.10	1.98
AA	30.0	3765	5.32	1.98
BB	31.4	4553	5.47	2.11
CC	33.0	4977	5.70	2.11
DD	40.5	5679	6.11	2.28
EE	42.4	6262	6.15	2.53

A COPY OF THE ORIGINAL SEALED AND SIGNED DRAWING IS ON FILE IN THE CENTRAL OFFICE

VDOT
ROAD AND BRIDGE STANDARDS

SHEET 1 OF 8 | REVISION DATE
1006.01 | 07/12

WING DETAIL

1½: 1 FILL SLOPE - TYPE I

VIRGINIA DEPARTMENT OF TRANSPORTATION

SPECIFICATION REFERENCE

BCW-11

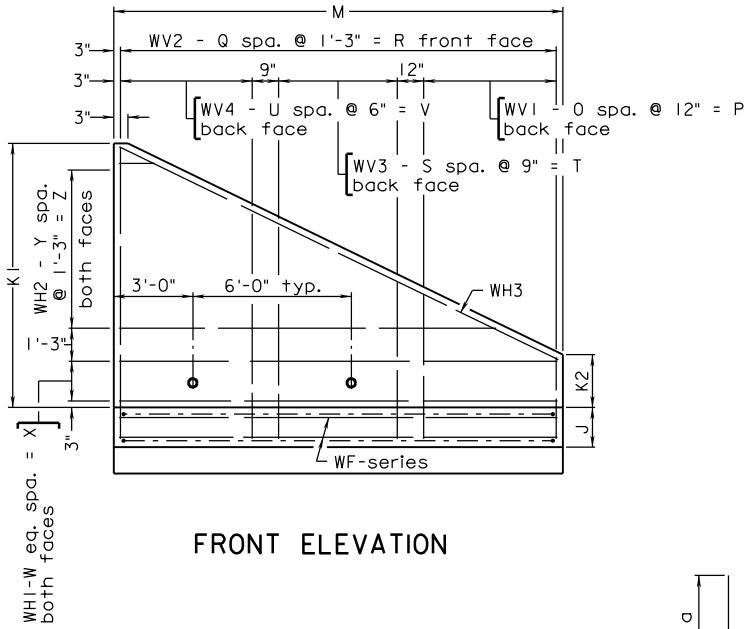

FRONT ELEVATION

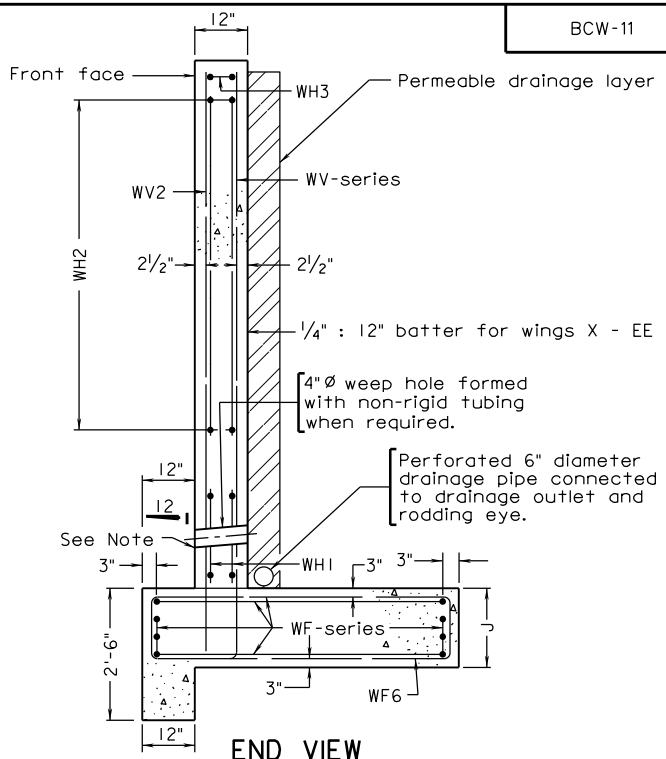

END VIEW

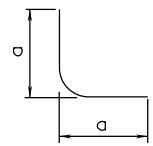

WF11

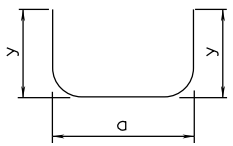

WF1 TO WF3, WF5 TO WF7

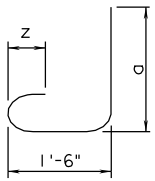

WV1, WV3, WV4

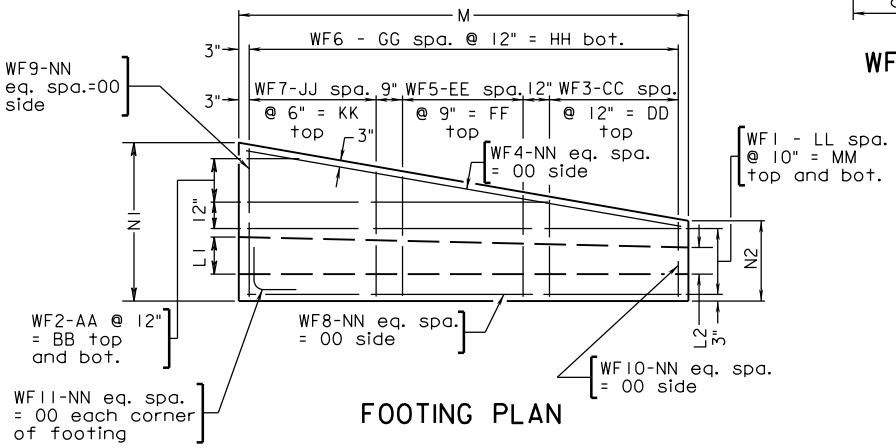

FOOTING PLAN

TABLE A	
Wall	y
A-W	9½"
X	1'-0½"
Y-CC	1'-3½"
DD-EE	1'-9½"

TABLE B		
Bar Size	Pin Dia.	Z
#3	2¼"	4"
#4	3"	4½"
#5	3¾"	5"
#6	4½"	6"
#7	5¼"	7"
#8	6"	8"
#9	9"	10⅛"

TABLE C	
Bar Size	Splice Length
#4	1'- 9"
#5	2'- 4"
#6	2'- 7"
#7	3'- 3"
#8	4'- 2"
#9	5'- 4"

A COPY OF THE ORIGINAL SEALED AND SIGNED DRAWING AND DESIGN STATEMENT IS ON FILE IN THE CENTRAL OFFICE.

SPECIFICATION REFERENCE

WING DETAIL

1½: 1 FILL SLOPE - TYPE I

VIRGINIA DEPARTMENT OF TRANSPORTATION

VDOT
ROAD AND BRIDGE STANDARDS

REVISION DATE 07/16

SHEET 2 OF 8

1006.02

BCW-11

WING	WALL DIMENSIONS								No. WEEP HOLES	FOOTING BAR SPACINGS													
	J	K1	K2	L1	L2	M	N1	N2		WF1		WF2		WF3		WF4, WF8 to WF10		WF5		WF6		WF7	
										LL	MM	AA	BB	CC	DD	NN	OO	EE	FF	GG	HH	JJ	KK
A	1'-6"	4'-0"	1'-9"	1'-0"	1'-0"	5'-0"	4'-0"	3'-0"	-	3	2'-6"	-	-	4	4'-0"	1	0'-8"	-	-	4	4'-0"	-	-
B	1'-6"	4'-6"	1'-9"	1'-0"	1'-0"	6'-0"	4'-0"	3'-0"	-	3	2'-6"	-	-	5	5'-0"	1	0'-8"	-	-	5	5'-0"	-	-
C	1'-6"	5'-0"	1'-9"	1'-0"	1'-0"	7'-0"	4'-0"	3'-0"	-	3	2'-6"	-	-	6	6'-0"	1	0'-8"	-	-	6	6'-0"	-	-
D	1'-6"	5'-6"	2'-3"	1'-0"	1'-0"	7'-0"	4'-3"	3'-0"	-	3	2'-6"	-	-	6	6'-0"	1	0'-8"	-	-	6	6'-0"	-	-
E	1'-6"	6'-0"	2'-3"	1'-0"	1'-0"	8'-0"	4'-6"	3'-0"	-	3	2'-6"	-	-	7	7'-0"	1	0'-8"	-	-	7	7'-0"	-	-
F	1'-6"	6'-6"	2'-3"	1'-0"	1'-0"	9'-0"	4'-9"	3'-0"	-	3	2'-6"	-	-	8	8'-0"	1	0'-8"	-	-	8	8'-0"	-	-
G	1'-6"	7'-0"	2'-9"	1'-0"	1'-0"	9'-0"	5'-6"	3'-0"	-	3	2'-6"	1	1'-0"	4	4'-0"	1	0'-8"	6	4'-6"	8	8'-0"	-	-
H	1'-6"	7'-6"	2'-9"	1'-0"	1'-0"	10'-0"	5'-6"	3'-0"	-	3	2'-6"	1	1'-0"	5	5'-0"	1	0'-8"	6	4'-6"	9	9'-0"	-	-
I	1'-6"	8'-0"	3'-0"	1'-0"	1'-0"	11'-0"	6'-0"	3'-0"	-	3	2'-6"	1	1'-0"	5	5'-0"	1	0'-8"	6	4'-6"	10	10'-0"	-	-
J	1'-6"	8'-6"	3'-0"	1'-0"	1'-0"	12'-0"	6'-6"	3'-0"	-	3	2'-6"	2	2'-0"	6	6'-0"	1	0'-8"	6	4'-6"	11	11'-0"	-	-
K	1'-6"	9'-0"	3'-6"	1'-0"	1'-0"	13'-0"	7'-0"	3'-0"	-	3	2'-6"	2	2'-0"	7	7'-0"	1	0'-8"	6	4'-6"	12	12'-0"	-	-
L	1'-6"	9'-6"	3'-6"	1'-0"	1'-0"	13'-0"	7'-6"	3'-0"	-	3	2'-6"	3	3'-0"	7	7'-0"	1	0'-8"	6	4'-6"	12	12'-0"	-	-
M	1'-6"	10'-0"	3'-6"	1'-0"	1'-0"	14'-0"	7'-6"	3'-0"	-	3	2'-6"	3	3'-0"	6	6'-0"	1	0'-8"	8	6'-0"	13	13'-0"	-	-
N	1'-6"	10'-6"	4'-0"	1'-0"	1'-0"	14'-0"	8'-6"	3'-6"	-	3	2'-6"	4	4'-0"	4	4'-0"	1	0'-8"	5	3'-9"	13	13'-0"	8	4'-0"
O	1'-6"	11'-0"	4'-0"	1'-0"	1'-0"	15'-0"	8'-6"	3'-6"	-	3	2'-6"	4	4'-0"	4	4'-0"	1	0'-8"	5	3'-9"	14	14'-0"	8	4'-0"
P	1'-6"	11'-6"	4'-0"	1'-0"	1'-0"	16'-0"	9'-0"	3'-6"	-	3	2'-6"	4	4'-0"	5	5'-0"	1	0'-8"	7	5'-3"	15	15'-0"	10	5'-0"
Q	1'-6"	12'-0"	4'-6"	1'-0"	1'-0"	16'-0"	9'-6"	4'-0"	-	4	3'-4"	4	4'-0"	5	5'-0"	1	0'-8"	7	5'-3"	15	15'-0"	10	5'-0"
R	1'-6"	12'-6"	4'-6"	1'-0"	1'-0"	17'-0"	10'-0"	4'-0"	-	4	3'-4"	4	4'-0"	5	5'-0"	1	0'-8"	7	5'-3"	16	16'-0"	10	5'-0"
S	1'-6"	13'-0"	4'-6"	1'-0"	1'-0"	18'-0"	10'-0"	4'-0"	-	4	3'-4"	4	4'-0"	5	5'-0"	1	0'-8"	7	5'-3"	17	17'-0"	10	5'-0"
T	2'-0"	13'-6"	4'-9"	1'-0"	1'-0"	19'-0"	11'-6"	4'-6"	-	4	3'-4"	6	6'-0"	6	6'-0"	1	1'-2"	8	6'-0"	18	18'-0"	12	6'-0"
U	2'-0"	14'-0"	5'-3"	1'-0"	1'-0"	19'-0"	12'-0"	4'-6"	-	4	3'-4"	6	6'-0"	6	6'-0"	1	1'-2"	8	6'-0"	18	18'-0"	12	6'-0"
V	2'-0"	14'-6"	5'-3"	1'-0"	1'-0"	20'-0"	12'-6"	4'-6"	1	4	3'-4"	7	7'-0"	6	6'-0"	1	1'-2"	8	6'-0"	19	19'-0"	12	6'-0"
W	2'-0"	15'-0"	5'-3"	1'-0"	1'-0"	21'-0"	13'-6"	4'-6"	1	4	3'-4"	8	8'-0"	6	6'-0"	1	1'-2"	8	6'-0"	20	20'-0"	12	6'-0"
X	2'-0"	15'-6"	5'-9"	1'-3¾"	1'-1⅛"	21'-0"	15'-0"	5'-0"	1	5	4'-2"	8	8'-0"	6	6'-0"	1	1'-2"	8	6'-0"	20	20'-0"	12	6'-0"
Y	2'-0"	16'-0"	5'-9"	1'-4"	1'-1⅛"	22'-0"	15'-0"	5'-0"	1	5	4'-2"	8	8'-0"	7	7'-0"	2	0'-7"	10	7'-6"	21	21'-0"	14	7'-0"
Z	2'-0"	16'-6"	5'-9"	1'-4⅛"	1'-1¼"	23'-0"	15'-6"	5'-0"	1	5	4'-2"	9	9'-0"	7	7'-0"	2	0'-7"	10	7'-6"	22	22'-0"	14	7'-0"
AA	2'-0"	17'-0"	5'-9"	1'-4¼"	1'-1¼"	24'-0"	15'-6"	5'-0"	1	5	4'-2"	9	9'-0"	7	7'-0"	2	0'-7"	10	7'-6"	23	23'-0"	14	7'-0"
BB	2'-0"	17'-6"	6'-3"	1'-4⅜"	1'-1¼"	24'-0"	16'-0"	5'-6"	1	6	5'-0"	9	9'-0"	7	7'-0"	2	0'-7"	10	7'-6"	23	23'-0"	14	7'-0"
CC	2'-0"	18'-0"	6'-3"	1'-4½"	1'-1¼"	25'-0"	16'-0"	5'-6"	2	6	5'-0"	9	9'-0"	8	8'-0"	2	0'-7"	11	8'-3"	24	24'-0"	16	8'-0"
DD	2'-6"	18'-6"	6'-3"	1'-4⅝"	1'-1⅜"	26'-0"	16'-6"	6'-0"	2	6	5'-0"	9	9'-0"	8	8'-0"	2	0'-10"	11	8'-3"	25	25'-0"	16	8'-0"
EE	2'-6"	19'-0"	6'-9"	1'-4¾"	1'-1⅜"	26'-0"	17'-6"	6'-0"	2	6	5'-0"	10	10'-0"	8	8'-0"	2	0'-10"	11	8'-3"	25	25'-0"	16	8'-0"

A COPY OF THE ORIGINAL SEALED AND SIGNED DRAWING IS ON FILE IN THE CENTRAL OFFICE

VDOT
ROAD AND BRIDGE STANDARDS

SHEET 3 OF 8 | REVISION DATE
1006.03 | 07/12

WING DETAILS

1½: 1 FILL SLOPE - TYPE I

VIRGINIA DEPARTMENT OF TRANSPORTATION

SPECIFICATION REFERENCE

BCW-11

WING	WF1				WF2								WF3						
	SIZE	a	LENGTH	* Ea	SIZE	a			LENGTH			* Ea	SIZE	a			LENGTH		
						FROM	TO	VARY BY	FROM	TO	VARY BY			FROM	TO	VARY BY	FROM	TO	VARY BY
A	4	4'-5"	5'-9"	2	4	0'-8"	5'-8"	-	2'-0"	7'-0"	-	2	4	3'-4"	2'-7"	0'-2⅜"	4'-9"	3'-11"	0'-2⅜"
B	4	5'-5"	6'-9"	2	4	0'-11"	6'-11"	-	2'-3"	8'-3"	-	2	4	3'-5"	2'-7"	0'-2"	4'-9"	3'-11"	0'-2"
C	4	6'-5"	7'-9"	2	4	1'-2"	8'-2"	-	2'-6"	9'-6"	-	2	4	3'-5"	2'-6"	0'-1⅝"	4'-9"	3'-11"	0'-1⅝"
D	4	6'-5"	7'-9"	2	4	2'-2"	7'-9"	-	3'-7"	9'-2"	-	2	4	3'-7"	2'-7"	0'-2⅛"	5'-0"	3'-11"	0'-2⅛"
E	4	7'-5"	8'-9"	2	4	3'-5"	3'-5"	-	4'-9"	4'-9"	-	2	4	3'-10"	2'-7"	0'-2¼"	5'-3"	3'-11"	0'-2¼"
F	4	8'-5"	9'-9"	2	4	4'-6"	4'-6"	-	5'-11"	5'-11"	-	2	4	4'-1"	2'-7"	0'-2¼"	5'-6"	3'-11"	0'-2¼"
G	4	8'-5"	9'-9"	2	4	5'-8"	2'-1"	3'-7⅛"	7'-1"	3'-5"	3'-7⅛"	2	4	3'-4"	2'-3"	0'-3¼"	4'-8"	3'-7"	0'-3¼"
H	4	9'-5"	10'-9"	2	4	6'-5"	2'-5"	4'-0"	7'-9"	3'-9"	4'-0"	2	4	3'-6"	2'-3"	0'-3"	4'-10"	3'-7"	0'-3"
I	4	10'-5"	11'-9"	2	4	7'-8"	4'-0"	3'-8"	9'-0"	5'-4"	3'-8"	2	4	3'-10"	2'-6"	0'-3¼"	5'-3"	3'-10"	0'-3¼"
J	4	11'-5"	12'-9"	2	4	8'-10"	1'-11"	3'-5⅛"	10'-2"	3'-4"	3'-5⅛"	2	4	4'-3"	2'-6"	0'-3½"	5'-7"	3'-10"	0'-3½"
K	4	12'-5"	13'-9"	2	4	9'-11"	3'-5"	3'-3"	11'-4"	4'-10"	3'-3"	2	4	4'-8"	2'-6"	0'-3⅝"	6'-0"	3'-10"	0'-3⅝"
L	4	12'-5"	13'-9"	2	4	10'-3"	1'-7"	2'-10⅝"	11'-7"	2'-11"	2'-10⅝"	2	4	4'-11"	2'-6"	0'-4⅛"	6'-4"	3'-11"	0'-4⅛"
M	4	13'-5"	14'-9"	2	4	11'-1"	1'-9"	3'-1¼"	12'-5"	3'-1"	3'-1¼"	2	4	4'-7"	2'-8"	0'-3¾"	6'-0"	4'-0"	0'-3¾"
N	4	13'-5"	14'-9"	2	4	12'-8"	1'-6"	2'-9½"	14'-1"	2'-10"	2'-9½"	2	4	4'-5"	3'-0"	0'-4¼"	5'-10"	4'-5"	0'-4¼"
O	4	14'-5"	15'-9"	2	4	13'-8"	1'-8"	3'-0"	15'-0"	3'-0"	3'-0"	2	4	4'-8"	3'-4"	0'-4"	6'-1"	4'-9"	0'-4"
P	4	15'-5"	16'-9"	2	4	14'-8"	3'-0"	2'-10¾"	16'-0"	4'-4"	2'-10¾"	2	4	4'-3"	2'-6"	0'-4⅛"	5'-7"	3'-10"	0'-4⅛"
Q	4	15'-5"	16'-9"	2	4	13'-8"	2'-1"	2'-10¾"	15'-1"	3'-4"	2'-10¾"	2	4	4'-8"	3'-0"	0'-4⅛"	6'-1"	4'-3"	0'-4⅛"
R	4	16'-5"	17'-9"	2	4	14'-9"	3'-5"	2'-10"	16'-1"	4'-9"	2'-10"	2	4	5'-1"	3'-4"	0'-4⅛"	6'-6"	4'-8"	0'-4⅛"
S	4	17'-5"	18'-9"	2	4	15'-8"	3'-8"	3'-0"	17'-0"	5'-0"	3'-0"	2	4	5'-4"	3'-8"	0'-4"	6'-9"	5'-1"	0'-4"
T	4	18'-5"	20'-9"	2	4	18'-2"	1'-10"	2'-8½"	20'-6"	4'-3"	2'-8½"	2	4	5'-9"	3'-7"	0'-4⅜"	8'-2"	5'-11"	0'-4⅜"
U	4	18'-5"	20'-9"	2	4	18'-2"	3'-0"	2'-6⅜"	20'-6"	5'-3"	2'-6⅜"	2	4	5'-11"	3'-6"	0'-4⅝"	8'-3"	5'-11"	0'-4⅝"
V	4	19'-5"	21'-9"	2	4	19'-2"	1'-8"	2'-6"	21'-7"	4'-1"	2'-6"	2	4	6'-4"	3'-11"	0'-4¾"	8'-8"	6'-4"	0'-4¾"
W	4	20'-5"	22'-9"	2	4	20'-2"	1'-6"	2'-4"	22'-7"	3'-11"	2'-4"	2	4	6'-11"	4'-4"	0'-5⅛"	9'-4"	6'-9"	0'-5⅛"
X	4	20'-5"	22'-9"	2	5	19'-6"	2'-8"	2'-1⅛"	21'-10"	5'-0"	2'-1⅛"	2	5	7'-9"	4'-11"	0'-5⅝"	10'-1"	7'-3"	0'-5⅝"
Y	4	21'-5"	23'-9"	2	5	20'-6"	2'-10"	2'-2⅜"	22'-9"	5'-2"	2'-2⅜"	2	5	6'-11"	3'-9"	0'-5⅜"	9'-3"	6'-1"	0'-5⅜"
Z	4	22'-5"	24'-9"	2	5	21'-6"	1'-9"	2'-2¼"	23'-9"	4'-1"	2'-2¼"	2	5	7'-5"	4'-2"	0'-5⅜"	9'-8"	6'-6"	0'-5⅜"
AA	4	23'-5"	25'-9"	2	5	22'-5"	1'-10"	2'-3⅜"	24'-9"	4'-2"	2'-3⅜"	2	5	7'-8"	4'-8"	0'-5¼"	10'-0"	7'-0"	0'-5¼"
BB	4	23'-5"	25'-9"	2	5	21'-8"	1'-1"	2'-3⅜"	24'-0"	3'-5"	2'-3⅜"	2	6	8'-2"	5'-2"	0'-5¼"	10'-6"	7'-5"	0'-5¼"
CC	4	24'-5"	26'-9"	2	5	22'-7"	1'-2"	2'-4½"	24'-11"	3'-6"	2'-4½"	2	6	7'-9"	4'-5"	0'-5"	10'-0"	6'-8"	0'-5"
DD	5	25'-5"	28'-8"	2	5	24'-9"	2'-6"	2'-5⅝"	28'-1"	5'-10"	2'-5⅝"	2	6	8'-7"	5'-4"	0'-4¾"	11'-10"	8'-7"	0'-4¾"
EE	5	25'-5"	28'-8"	2	5	24'-10"	2'-2"	2'-3⅛"	28'-2"	5'-6"	2'-3⅛"	2	6	8'-10"	5'-4"	0'-5¼"	12'-1"	8'-7"	0'-5¼"

A COPY OF THE ORIGINAL SEALED AND SIGNED DRAWING IS ON FILE IN THE CENTRAL OFFICE

SPECIFICATION REFERENCE

WING DETAILS

1½: 1 FILL SLOPE -TYPE I

VIRGINIA DEPARTMENT OF TRANSPORTATION

VDOT

ROAD AND BRIDGE STANDARDS

REVISION DATE 07/12

SHEET 4 OF 8

1006.04

BCW-11

WING	WF4		WF5							WF6						
	SIZE	LENGTH	SIZE	a			LENGTH			SIZE	a			LENGTH		
				FROM	TO	VARY BY	FROM	TO	VARY BY		FROM	TO	VARY BY	FROM	TO	VARY BY
A	4	4'-3"	-	-	-	-	-	-	-	4	3'-4"	2'-6"	0'-2⅜"	4'-8"	3'-11"	0'-2⅜"
B	4	5'-3"	-	-	-	-	-	-	-	4	3'-4"	2'-6"	0'-2"	4'-9"	3'-11"	0'-2"
C	4	6'-2"	-	-	-	-	-	-	-	4	3'-4"	2'-6"	0'-1⅝"	4'-9"	3'-10"	0'-1⅝"
D	4	6'-3"	-	-	-	-	-	-	-	4	3'-7"	2'-6"	0'-2⅛"	4'-11"	3'-11"	0'-2⅛"
E	4	7'-3"	-	-	-	-	-	-	-	4	3'-10"	2'-6"	0'-2¼"	5'-2"	3'-11"	0'-2¼"
F	4	8'-3"	-	-	-	-	-	-	-	4	4'-1"	2'-6"	0'-2¼"	5'-5"	3'-11"	0'-2¼"
G	4	8'-6"	4	4'-10"	3'-7"	0'-2⅜"	6'-3"	5'-0"	0'-2⅜"	4	4'-10"	2'-7"	0'-3¼"	6'-2"	4'-0"	0'-3¼"
H	4	9'-4"	4	4'-10"	3'-9"	0'-2¼"	6'-3"	5'-1"	0'-2¼"	4	4'-10"	2'-7"	0'-3"	6'-2"	3'-11"	0'-3"
I	4	10'-7"	4	5'-4"	4'-1"	0'-2⅜"	6'-9"	5'-6"	0'-2⅜"	4	5'-4"	2'-7"	0'-3¼"	6'-8"	3'-11"	0'-3¼"
J	4	11'-8"	4	5'-10"	4'-6"	0'-2⅝"	7'-3"	5'-11"	0'-2⅝"	4	5'-10"	2'-7"	0'-3½"	7'-2"	4'-0"	0'-3½"
K	4	12'-9"	5	6'-4"	4'-11"	0'-2¾"	7'-8"	6'-3"	0'-2¾"	4	6'-4"	2'-7"	0'-3⅝"	7'-8"	4'-0"	0'-3⅝"
L	4	12'-11"	5	6'-10"	5'-3"	0'-3"	8'-2"	6'-7"	0'-3"	4	6'-9"	2'-8"	0'-4⅛"	8'-2"	4'-0"	0'-4⅛"
M	4	13'-10"	5	6'-10"	4'-11"	0'-2¾"	8'-2"	6'-3"	0'-2¾"	4	6'-10"	2'-7"	0'-3¾"	8'-2"	4'-0"	0'-3¾"
N	4	14'-0"	5	6'-2"	4'-10"	0'-3⅛"	7'-5"	6'-1"	0'-3⅛"	4	7'-9"	3'-2"	0'-4¼"	9'-2"	4'-6"	0'-4¼"
O	4	15'-0"	5	6'-3"	5'-0"	0'-3"	7'-7"	6'-4"	0'-3"	4	7'-10"	3'-1"	0'-4"	9'-2"	4'-6"	0'-4"
P	4	16'-1"	5	6'-4"	4'-7"	0'-3"	7'-8"	5'-10"	0'-3"	4	8'-3"	3'-2"	0'-4⅛"	9'-8"	4'-6"	0'-4⅛"
Q	4	16'-1"	5	6'-10"	5'-1"	0'-3"	8'-2"	6'-4"	0'-3"	4	8'-9"	3'-8"	0'-4⅛"	10'-2"	5'-0"	0'-4⅛"
R	4	17'-2"	5	7'-4"	5'-5"	0'-3⅛"	8'-7"	6'-9"	0'-3⅛"	4	9'-3"	3'-8"	0'-4⅛"	10'-8"	5'-0"	0'-4⅛"
S	4	18'-2"	5	7'-5"	5'-8"	0'-3"	8'-9"	7'-0"	0'-3"	4	9'-4"	3'-7"	0'-4"	10'-8"	5'-0"	0'-4"
T	4	19'-5"	5	8'-4"	6'-1"	0'-3¼"	10'-8"	8'-5"	0'-3¼"	4	10'-9"	4'-2"	0'-4⅜"	13'-2"	6'-6"	0'-4⅜"
U	4	19'-7"	5	8'-8"	6'-3"	0'-3½"	11'-0"	8'-7"	0'-3½"	4	11'-3"	4'-2"	0'-4⅝"	13'-8"	6'-7"	0'-4⅝"
V	4	20'-8"	6	9'-1"	6'-9"	0'-3½"	11'-5"	9'-0"	0'-3½"	4	11'-9"	4'-2"	0'-4¾"	14'-2"	6'-7"	0'-4¾"
W	4	22'-0"	6	9'-11"	7'-4"	0'-3¾"	12'-2"	9'-7"	0'-3¾"	4	12'-9"	4'-2"	0'-5⅛"	15'-2"	6'-7"	0'-5⅛"
X	4	22'-5"	6	11'-1"	8'-3"	0'-4¼"	13'-4"	10'-6"	0'-4¼"	5	14'-3"	4'-9"	0'-5⅝"	16'-7"	7'-1"	0'-5⅝"
Y	4	23'-4"	6	10'-9"	7'-4"	0'-4"	13'-1"	9'-8"	0'-4"	5	14'-3"	4'-9"	0'-5⅜"	16'-7"	7'-0"	0'-5⅜"
Z	4	24'-5"	7	11'-3"	7'-10"	0'-4"	13'-6"	10'-1"	0'-4"	5	14'-9"	4'-9"	0'-5⅜"	17'-1"	7'-0"	0'-5⅜"
AA	4	25'-4"	7	11'-5"	8'-2"	0'-3¾"	13'-8"	10'-4"	0'-3¾"	5	14'-9"	4'-9"	0'-5¼"	17'-1"	7'-0"	0'-5¼"
BB	4	25'-4"	7	11'-11"	8'-8"	0'-3¾"	14'-2"	10'-10"	0'-3¾"	5	15'-3"	5'-2"	0'-5¼"	17'-7"	7'-6"	0'-5¼"
CC	4	26'-3"	7	11'-8"	8'-2"	0'-3¾"	13'-10"	10'-5"	0'-3¾"	5	15'-3"	5'-2"	0'-5"	17'-7"	7'-6"	0'-5"
DD	5	27'-2"	7	12'-3"	8'-11"	0'-3⅝"	15'-6"	12'-2"	0'-3⅝"	5	15'-9"	5'-8"	0'-4¾"	19'-1"	9'-0"	0'-4¾"
EE	5	27'-7"	7	12'-11"	9'-3"	0'-3¾"	16'-2"	12'-6"	0'-3¾"	5	16'-9"	5'-8"	0'-5¼"	20'-1"	9'-0"	0'-5¼"

A COPY OF THE ORIGINAL SEALED AND SIGNED DRAWING IS ON FILE IN THE CENTRAL OFFICE

VDOT
ROAD AND BRIDGE STANDARDS

SHEET 5 OF 8 | REVISION DATE
1006.05 | 07/12

WING DETAILS

1½: 1 FILL SLOPE - TYPE I

VIRGINIA DEPARTMENT OF TRANSPORTATION

SPECIFICATION REFERENCE

BCW-11

WING	WF7							WF8		WF9		WF10		WF11			
	SIZE	a			LENGTH			SIZE	LENGTH	SIZE	LENGTH	SIZE	LENGTH	SIZE	a	LENGTH	• Ea
		FROM	TO	VARY BY	FROM	TO	VARY BY										
A	-	-	-	-	-	-	-	4	4'-2"	4	3'-2"	4	2'-2"	4	2'-2"	4'-2"	4
B	-	-	-	-	-	-	-	4	5'-2"	4	3'-2"	4	2'-2"	4	2'-2"	4'-2"	4
C	-	-	-	-	-	-	-	4	6'-2"	4	3'-2"	4	2'-2"	4	2'-2"	4'-2"	4
D	-	-	-	-	-	-	-	4	6'-2"	4	3'-5"	4	2'-2"	4	2'-2"	4'-2"	4
E	-	-	-	-	-	-	-	4	7'-2"	4	3'-8"	4	2'-2"	4	2'-2"	4'-2"	4
F	-	-	-	-	-	-	-	4	8'-2"	4	3'-11"	4	2'-2"	4	2'-2"	4'-2"	4
G	-	-	-	-	-	-	-	4	8'-2"	4	4'-8"	4	2'-2"	4	2'-2"	4'-2"	4
H	-	-	-	-	-	-	-	4	9'-2"	4	4'-8"	4	2'-2"	4	2'-2"	4'-2"	4
I	-	-	-	-	-	-	-	4	10'-2"	4	5'-2"	4	2'-2"	4	2'-2"	4'-2"	4
J	-	-	-	-	-	-	-	4	11'-2"	4	5'-8"	4	2'-2"	4	2'-2"	4'-2"	4
K	-	-	-	-	-	-	-	4	12'-2"	4	6'-2"	4	2'-2"	4	2'-2"	4'-2"	4
L	-	-	-	-	-	-	-	4	12'-2"	4	6'-8"	4	2'-2"	4	2'-2"	4'-2"	4
M	-	-	-	-	-	-	-	4	13'-2"	4	6'-8"	4	2'-2"	4	2'-2"	4'-2"	4
N	5	7'-10"	6'-5"	0'-2⅛"	9'-2"	7'-9"	0'-2⅛"	4	13'-2"	4	7'-8"	4	2'-8"	4	2'-2"	4'-2"	4
O	5	7'-10"	6'-6"	0'-2"	9'-2"	7'-10"	0'-2"	4	14'-2"	4	7'-8"	4	2'-8"	4	2'-2"	4'-2"	4
P	5	8'-4"	6'-7"	0'-2"	9'-8"	7'-11"	0'-2"	4	15'-2"	4	8'-2"	4	2'-8"	4	2'-2"	4'-2"	4
Q	6	8'-10"	7'-1"	0'-2"	10'-2"	8'-5"	0'-2"	4	15'-2"	4	8'-8"	4	3'-2"	4	2'-2"	4'-2"	4
R	6	9'-4"	7'-7"	0'-2"	10'-7"	8'-10"	0'-2"	4	16'-2"	4	9'-2"	4	3'-2"	4	2'-2"	4'-2"	4
S	6	9'-4"	7'-8"	0'-2"	10'-7"	8'-11"	0'-2"	4	17'-2"	4	9'-2"	4	3'-2"	4	2'-2"	4'-2"	4
T	6	10'-10"	8'-7"	0'-2⅛"	13'-1"	10'-11"	0'-2⅛"	4	18'-2"	4	10'-8"	4	3'-8"	4	2'-2"	4'-2"	4
U	6	11'-4"	8'-11"	0'-2⅜"	13'-7"	11'-3"	0'-2⅜"	4	18'-2"	4	11'-2"	4	3'-8"	4	2'-2"	4'-2"	4
V	7	11'-10"	9'-5"	0'-2⅜"	14'-0"	11'-8"	0'-2⅜"	4	19'-2"	4	11'-8"	4	3'-8"	4	2'-2"	4'-2"	4
W	7	12'-10"	10'-3"	0'-2½"	15'-0"	12'-5"	0'-2½"	4	20'-2"	4	12'-8"	4	3'-8"	4	2'-2"	4'-2"	4
X	7	14'-4"	11'-5"	0'-2¾"	16'-6"	13'-8"	0'-2¾"	4	20'-2"	4	14'-2"	4	4'-2"	4	2'-2"	4'-2"	4
Y	7	14'-4"	11'-1"	0'-2⅝"	16'-6"	13'-4"	0'-2⅝"	4	21'-2"	4	14'-2"	4	4'-2"	4	2'-2"	4'-2"	4
Z	7	14'-10"	11'-7"	0'-2⅝"	17'-0"	13'-10"	0'-2⅝"	4	22'-2"	4	14'-8"	4	4'-2"	4	2'-2"	4'-2"	4
AA	7	14'-10"	11'-9"	0'-2⅝"	17'-0"	14'-0"	0'-2⅝"	4	23'-2"	4	14'-8"	4	4'-2"	4	2'-2"	4'-2"	4
BB	8	15'-4"	12'-3"	0'-2⅝"	17'-6"	14'-5"	0'-2⅝"	4	23'-2"	4	15'-2"	4	4'-8"	4	2'-2"	4'-2"	4
CC	8	15'-4"	11'-11"	0'-2½"	17'-6"	14'-1"	0'-2½"	4	24'-2"	4	15'-2"	4	4'-8"	4	2'-2"	4'-2"	4
DD	8	15'-10"	12'-7"	0'-2⅜"	19'-0"	15'-9"	0'-2⅜"	5	25'-2"	5	15'-8"	5	5'-2"	5	2'-9"	5'-4"	4
EE	8	16'-10"	13'-3"	0'-2⅝"	20'-0"	16'-5"	0'-2⅝"	5	25'-2"	5	16'-8"	5	5'-2"	5	2'-9"	5'-4"	4

A COPY OF THE ORIGINAL SEALED AND SIGNED DRAWING IS ON FILE IN THE CENTRAL OFFICE

SPECIFICATION REFERENCE

WING DETAILS

1½: 1 FILL SLOPE - TYPE I

VIRGINIA DEPARTMENT OF TRANSPORTATION

VDOT

ROAD AND BRIDGE STANDARDS

REVISION DATE 07/12

SHEET 6 OF 8

1006.06

BCW-11

WING	STEM BAR SPACINGS												WV1							WV2		
	WV1		WV2		WV3		WV4		WH1		WH2		SIZE	a			LENGTH			SIZE	LENGTH		
	O	P	Q	R	S	T	U	V	W	X	Y	Z		FROM	TO	VARY BY	FROM	TO	VARY BY		FROM	TO	VARY BY
A	4	4'-0"	3	3'-9"	-	-	-	-	1	1'-3"	1	1'-3"	4	4'-11"	3'-1"	0'-5⅜"	6'-10"	5'-0"	0'-5⅜"	4	4'-11"	3'-2"	0'-6¾"
B	5	5'-0"	4	5'-0"	-	-	-	-	1	0'-6"	1	1'-3"	4	5'-5"	3'-1"	0'-5½"	7'-4"	5'-0"	0'-5½"	4	5'-5"	3'-1"	0'-6¾"
C	6	6'-0"	5	6'-3"	-	-	-	-	1	1'-0"	1	1'-3"	4	5'-11"	3'-1"	0'-5⅜"	7'-10"	5'-0"	0'-5⅜"	4	5'-11"	3'-0"	0'-7"
D	6	6'-0"	5	6'-3"	-	-	-	-	2	1'-6"	1	1'-3"	4	6'-5"	3'-7"	0'-5⅜"	8'-4"	5'-6"	0'-5⅜"	4	6'-5"	3'-6"	0'-7"
E	7	7'-0"	6	7'-6"	-	-	-	-	1	0'-9"	2	2'-6"	4	6'-11"	3'-7"	0'-5⅝"	8'-10"	5'-6"	0'-5⅝"	4	6'-11"	3'-4"	0'-7"
F	8	8'-0"	6	7'-6"	-	-	-	-	1	1'-3"	2	2'-6"	4	7'-5"	3'-7"	0'-5⅝"	9'-4"	5'-6"	0'-5⅝"	4	7'-5"	3'-10"	0'-7⅛"
G	4	4'-0"	6	7'-6"	6	4'-6"	-	-	2	1'-9"	2	2'-6"	4	5'-4"	3'-5"	0'-5⅝"	7'-2"	5'-3"	0'-5⅝"	4	7'-11"	4'-4"	0'-7⅛"
H	5	5'-0"	7	8'-9"	6	4'-6"	-	-	2	2'-3"	2	2'-6"	4	5'-9"	3'-5"	0'-5⅝"	7'-8"	5'-3"	0'-5⅝"	4	8'-5"	4'-3"	0'-7⅛"
I	5	5'-0"	8	10'-0"	6	4'-6"	-	-	2	1'-6"	3	3'-9"	4	6'-5"	4'-1"	0'-5⅜"	8'-4"	6'-0"	0'-5⅜"	4	8'-11"	4'-4"	0'-6¾"
J	6	6'-0"	9	11'-3"	6	4'-6"	-	-	2	2'-0"	3	3'-9"	4	6'-11"	4'-1"	0'-5½"	8'-9"	6'-0"	0'-5½"	4	9'-5"	4'-3"	0'-6¾"
K	7	7'-0"	10	12'-6"	6	4'-6"	-	-	2	2'-6"	3	3'-9"	4	7'-7"	4'-7"	0'-5"	9'-6"	6'-6"	0'-5"	4	9'-11"	4'-7"	0'-6⅜"
L	7	7'-0"	10	12'-6"	6	4'-6"	-	-	3	3'-0"	3	3'-9"	4	7'-10"	4'-7"	0'-5½"	9'-9"	6'-6"	0'-5½"	4	10'-5"	4'-7"	0'-6¾"
M	6	6'-0"	10	12'-6"	8	6'-0"	-	-	2	2'-3"	4	5'-0"	4	7'-8"	4'-10"	0'-5½"	9'-7"	6'-9"	0'-5½"	4	10'-11"	5'-1"	0'-7"
N	4	4'-0"	10	12'-6"	5	3'-9"	8	4'-0"	3	2'-9"	4	5'-0"	5	7'-0"	5'-1"	0'-5½"	8'-11"	7'-1"	0'-5½"	4	11'-5"	5'-7"	0'-7"
O	4	4'-0"	11	13'-9"	5	3'-9"	8	4'-0"	3	3'-3"	4	5'-0"	5	7'-6"	5'-7"	0'-5⅝"	9'-5"	7'-6"	0'-5⅝"	4	11'-11"	5'-6"	0'-7"
P	5	5'-0"	12	15'-0"	7	5'-3"	10	5'-0"	2	2'-6"	5	6'-3"	5	6'-9"	4'-5"	0'-5⅝"	8'-8"	6'-4"	0'-5⅝"	4	12'-5"	5'-4"	0'-7"
Q	5	5'-0"	12	15'-0"	7	5'-3"	10	5'-0"	3	3'-0"	5	6'-3"	5	7'-3"	4'-11"	0'-5⅝"	9'-2"	6'-10"	0'-5⅝"	4	12'-11"	5'-10"	0'-7"
R	5	5'-0"	13	16'-3"	7	5'-3"	10	5'-0"	3	3'-6"	5	6'-3"	4	7'-9"	5'-5"	0'-5⅝"	9'-8"	7'-3"	0'-5⅝"	4	13'-5"	5'-9"	0'-7"
S	5	5'-0"	14	17'-6"	7	5'-3"	10	5'-0"	4	4'-0"	5	6'-3"	5	8'-3"	5'-10"	0'-5⅝"	10'-2"	7'-10"	0'-5⅝"	4	13'-11"	5'-7"	0'-7"
T	6	6'-0"	14	17'-6"	8	6'-0"	12	6'-0"	3	3'-3"	6	7'-6"	5	8'-7"	5'-9"	0'-5½"	10'-6"	7'-9"	0'-5½"	4	14'-11"	6'-10"	0'-6¾"
U	6	6'-0"	14	17'-6"	8	6'-0"	12	6'-0"	3	3'-9"	6	7'-6"	5	9'-1"	6'-3"	0'-5½"	11'-0"	8'-3"	0'-5½"	4	15'-5"	7'-4"	0'-6¾"
V	6	6'-0"	15	18'-9"	8	6'-0"	12	6'-0"	4	4'-3"	6	7'-6"	5	9'-6"	6'-9"	0'-5½"	11'-6"	8'-8"	0'-5½"	4	15'-11"	7'-3"	0'-6¾"
W	6	6'-0"	16	20'-0"	8	6'-0"	12	6'-0"	4	4'-9"	6	7'-6"	5	10'-0"	7'-3"	0'-5½"	11'-11"	9'-2"	0'-5½"	4	16'-5"	7'-1"	0'-6¾"
X	6	6'-0"	16	20'-0"	8	6'-0"	12	6'-0"	5	5'-3"	6	7'-6"	5	10'-6"	7'-9"	0'-5½"	12'-5"	9'-8"	0'-5½"	4	16'-11"	7'-7"	0'-6¾"
Y	7	7'-0"	17	21'-3"	10	7'-6"	14	7'-0"	4	4'-6"	7	8'-9"	5	9'-10"	6'-7"	0'-5½"	11'-9"	8'-6"	0'-5½"	4	17'-5"	7'-6"	0'-7"
Z	7	7'-0"	18	22'-6"	10	7'-6"	14	7'-0"	4	5'-0"	7	8'-9"	6	10'-4"	7'-0"	0'-5⅝"	12'-4"	9'-1"	0'-5⅝"	4	17'-11"	7'-4"	0'-7"
AA	7	7'-0"	18	22'-6"	10	7'-6"	14	7'-0"	4	4'-3"	8	10'-0"	6	10'-9"	7'-6"	0'-5⅝"	12'-10"	9'-6"	0'-5⅝"	4	18'-5"	7'-10"	0'-7"
BB	7	7'-0"	18	22'-6"	10	7'-6"	21	10'-6"	4	4'-9"	8	10'-0"	7	9'-8"	6'-4"	0'-5⅝"	11'-9"	8'-5"	0'-5⅝"	4	18'-11"	8'-4"	0'-7"
CC	8	8'-0"	19	23'-9"	11	8'-3"	24	12'-0"	5	5'-3"	8	10'-0"	7	9'-1"	5'-3"	0'-5⅝"	11'-2"	7'-5"	0'-5⅝"	4	19'-5"	8'-3"	0'-7"
DD	8	8'-0"	20	25'-0"	11	8'-3"	24	12'-0"	5	5'-9"	8	10'-0"	7	10'-0"	6'-3"	0'-5⅝"	12'-2"	8'-4"	0'-5⅝"	4	20'-5"	8'-7"	0'-7"
EE	8	8'-0"	20	25'-0"	11	8'-3"	24	12'-0"	5	6'-3"	8	10'-0"	7	10'-6"	6'-9"	0'-5⅝"	12'-8"	8'-10"	0'-5⅝"	4	20'-11"	9'-1"	0'-7"

A COPY OF THE ORIGINAL SEALED AND SIGNED DRAWING IS ON FILE IN THE CENTRAL OFFICE

VDOT
ROAD AND BRIDGE STANDARDS

SHEET 7 OF 8 | REVISION DATE
1006.07 | 07/12

WING DETAILS

1½: 1 FILL SLOPE - TYPE I

VIRGINIA DEPARTMENT OF TRANSPORTATION

SPECIFICATION REFERENCE

BCW-11

WING	WV3							WV4							WH1			WH2					WH3	
	SIZE	a			LENGTH			SIZE	a			LENGTH			SIZE	LENGTH	* Ea	SIZE	LENGTH			* EA	SIZE	LENGTH
		FROM	TO	VARY BY	FROM	TO	VARY BY		FROM	TO	VARY BY	FROM	TO	VARY BY					FROM	TO	VARY BY			
A	-	-	-	-	-	-	-	-	-	-	-	-	-	_	4	4'-6"	2	4	2'-1"	-	-	2	4	5'-0"
B	-	-	-	-	-	-	-	-	-	-	-	-	-	_	4	5'-6"	2	4	4'-8"	2'-0"	2'-7½"	2	4	6'-1"
C	-	-	-	-	-	-	-	-	-	-	-	-	-	_	4	6'-6"	2	4	4'-7"	2'-0"	2'-6¾"	2	4	7'-3"
D	-	-	-	-	-	-	-	-	-	-	-	-	-	_	4	6'-6"	2	4	4'-7"	2'-0"	2'-6¾"	2	4	7'-3"
E	-	-	-	-	-	-	-	-	-	-	-	-	-	_	4	7'-6"	2	4	7'-2"	2'-0"	2'-7"	2	4	8'-4"
F	-	-	-	-	-	-	-	-	-	-	-	-	-	_	4	8'-6"	2	4	7'-2"	2'-0"	2'-7"	2	4	12'-5"
G	4	7'-11"	5'-9"	0'-4¼"	9'-10"	7'-8"	0'-4¼"	-	-	-	-	-	-	_	4	8'-6"	2	4	7'-2"	2'-0"	2'-7"	2	4	13'-5"
H	4	8'-5"	6'-3"	0'-4¼"	10'-4"	8'-2"	0'-4¼"	-	-	-	-	-	-	_	4	9'-6"	2	4	7'-2"	2'-0"	2'-7"	2	4	10'-7"
I	5	8'-11"	6'-10"	0'-4⅛"	10'-10"	8'-10"	0'-4⅛"	-	-	-	-	-	-	_	4	10'-6"	2	4	10'-2"	2'-1"	2'-8¼""	2	4	11'-7"
J	5	9'-5"	7'-4"	0'-4⅛"	11'-4"	9'-3"	0'-4⅛"	-	-	-	-	-	-	_	4	11'-6"	2	4	10'-1"	2'-1"	2'-8"	2	4	12'-8"
K	6	9'-11"	8'-0"	0'-3¾"	11'-11"	10'-0"	0'-3¾"	-	-	-	-	-	-	_	4	12'-6"	2	4	11'-0"	2'-3"	2'-10¾"	2	4	13'-7"
L	6	10'-5"	8'-4"	0'-4⅛"	12'-5"	10'-4"	0'-4⅛"	-	-	-	-	-	-	_	4	12'-6"	2	4	10'-0"	2'-0"	2'-7¾"	2	4	13'-10"
M	6	10'-11"	8'-1"	0'-4⅛"	12'-11"	10'-2"	0'-4⅛"	-	-	-	-	-	-	_	4	13'-6"	2	4	12'-8"	2'-0"	2'-7¾"	2	4	14'-11"
N	6	9'-3"	7'-5"	0'-4⅛"	11'-3"	9'-6"	0'-4⅛"	6	11'-5"	9'-7"	0'-2¾"	13'-5"	11'-7"	0'-2¾"	4	13'-6"	2	4	12'-8"	2'-0"	2'-7¾"	2	4	14'-11"
O	6	9'-8"	7'-11"	0'-4⅛"	11'-9"	10'-0"	0'-4⅛"	6	11'-11"	10'-0"	0'-2¾"	13'-11"	12'-1"	0'-2¾"	4	14'-6"	2	4	12'-7"	2'-0"	2'-7½"	2	4	16'-1"
P	6	9'-9"	7'-3"	0'-4⅛"	11'-9"	9'-3"	0'-4⅛"	6	12'-5"	10'-1"	0'-2¾"	14'-5"	12'-1"	0'-2¾"	4	15'-6"	2	4	15'-2"	2'-0"	2'-7½"	2	4	17'-2"
Q	6	10'-3"	7'-9"	0'-4⅛"	12'-3"	9'-9"	0'-4⅛"	6	12'-11"	10'-7"	0'-2¾"	14'-11"	12'-7"	0'-2¾"	4	15'-6"	2	4	15'-2"	2'-0"	2'-7½"	2	4	17'-2"
R	6	10'-8"	8'-3"	0'-4¼"	12'-9"	10'-3"	0'-4¼"	7	13'-5"	11'-1"	0'-2¾"	15'-6"	13'-2"	0'-2¾"	4	16'-6"	2	4	15'-1"	2'-0"	2'-7¼"	2	4	18'-3"
S	6	11'-2"	8'-8"	0'-4¼"	13'-3"	10'-9"	0'-4¼"	7	13'-11"	11'-7"	0'-2¾"	16'-0"	13'-8"	0'-2¾"	4	17'-6"	2	4	15'-1"	2'-0"	2'-7⅜"	2	4	19'-5"
T	6	11'-10"	9'-0"	0'-4⅛"	13'-10"	11'-1"	0'-4⅛"	7	14'-11"	12'-2"	0'-2¾"	17'-0"	14'-3"	0'-2¾"	4	18'-6"	2	4	18'-2"	2'-1"	2'-8"	2	4	20'-5"
U	7	12'-4"	9'-6"	0'-4⅛"	14'-5"	11'-8"	0'-4⅛"	8	15'-5"	12'-8"	0'-2¾"	17'-7"	14'-10"	0'-2¾"	4	18'-6"	2	4	18'-2"	2'-1"	2'-8"	2	4	20'-5"
V	7	12'-9"	10'-0"	0'-4⅛"	14'-11"	12'-1"	0'-4⅛"	8	15'-11"	13'-2"	0'-2¾"	18'-1"	15'-4"	0'-2¾"	4	19'-6"	2	4	18'-1"	2'-0"	2'-8"	2	4	21'-6"
W	7	13'-3"	10'-6"	0'-4⅛"	15'-5"	12'-7"	0'-4⅛"	9	16'-5"	13'-7"	0'-2¾"	18'-10"	16'-1"	0'-2¾"	4	20'-6"	2	4	18'-0"	2'-0"	2'-7¾"	2	4	22'-8"
X	7	13'-9"	11'-0"	0'-4⅛"	15'-11"	13'-1"	0'-4⅛"	8	16'-11"	14'-1"	0'-2¾"	19'-1"	16'-4"	0'-2¾"	4	20'-6"	2	4	18'-0"	2'-0"	2'-7¾"	2	4	22'-8"
Y	7	13'-10"	10'-3"	0'-4⅛"	15'-11"	12'-5"	0'-4⅛"	8	17'-5"	14'-2"	0'-2¾"	19'-7"	16'-4"	0'-2¾"	4	21'-6"	2	4	20'-8"	2'-0"	2'-7¾"	2	4	23'-9"
Z	7	14'-3"	10'-9"	0'-4⅛"	16'-5"	12'-11"	0'-4⅛"	8	17'-11"	14'-8"	0'-2¾"	20'-1"	16'-10"	0'-2¾"	4	22'-6"	2	4	20'-7"	2'-1"	2'-7¾"	2	4	24'-11"
AA	7	14'-9"	11'-3"	0'-4⅛"	16'-11"	13'-4"	0'-4⅛"	9	18'-5"	15'-2"	0'-2¾"	20'-10"	17'-7"	0'-2¾"	4	23'-6"	2	4	23'-2"	2'-1"	2'-7½"	2	4	26'-0"
BB	8	13'-8"	10'-1"	0'-4⅛"	15'-10"	12'-4"	0'-4⅛"	9	18'-11"	14'-0"	0'-2¾"	21'-4"	16'-5"	0'-2¾"	4	23'-6"	2	4	23'-2"	2'-1"	2'-7½"	2	4	26'-0"
CC	8	13'-5"	9'-6"	0'-4⅛"	15'-7"	11'-9"	0'-4⅛"	9	19'-5"	13'-9"	0'-2¾"	21'-10"	16'-3"	0'-2¾"	4	24'-6"	2	4	23'-1"	2'-0"	2'-7½"	2	4	27'-1"
DD	8	14'-5"	10'-6"	0'-4⅛"	16'-7"	12'-8"	0'-4⅛"	9	20'-5"	14'-9"	0'-2¾"	22'-10"	17'-2"	0'-2¾"	4	25'-6"	2	4	23'-1"	2'-0"	2'-7½"	2	4	28'-3"
EE	8	14'-11"	11'-0"	0'-4⅛"	17'-1"	13'-2"	0'-4⅛"	10	20'-11"	15'-3"	0'-2¾"	23'-4"	17'-8"	0'-2¾"	4	25'-6"	2	4	23'-1"	2'-0"	2'-7½"	2	4	28'-3"

A COPY OF THE ORIGINAL SEALED AND SIGNED DRAWING IS ON FILE IN THE CENTRAL OFFICE

SPECIFICATION REFERENCE

WING DETAILS

1½: 1 FILL SLOPE - TYPE I

VIRGINIA DEPARTMENT OF TRANSPORTATION

VDOT

ROAD AND BRIDGE STANDARDS

REVISION DATE 07/12

SHEET 8 OF 8

1006.08

BCW-12

GENERAL NOTES

Specifications:

AASHTO LRFD Bridge Design Specifications 5th Edition 2010; 2011 Interim Revisions; and VDOT Modifications

Limits of validity for Standard Wingwall design

The standard wingwall designs are based on the following assumptions:

there is no structural connection between the wall and the box culvert
traffic surcharge loading is neglected.

Backfill

Backfill shall comprise granular material with an internal friction angle Φ' of at least 34 °. Cohesive backfill shall not be permitted. Compaction of the backfill material within a distance of one-half the height of the wall shall be by hand compactors only.

Drainage

The Contractor shall provide the drainage system indicated on Sheet 1.

The cost for the drainage system (including porous backfill, 6" diameter non-rigid tubing and other items required) shall be incidental to the cost bid for Concrete.

Concrete

All concrete shall be Class A4.

Reinforcement

Deformed reinforcing bars shall conform to ASTM A615, Grade 60. All reinforcing bar dimensions on the detailed drawings are to centers of bars except where otherwise noted and are subject to fabrication and construction tolerances.

Dimensions on bar diagrams are out-to-out of bars. Bars are straight unless otherwise shown.

The concrete cover to the outermost reinforcement bars shall be as follows:

Wall footing (all faces) 3" minimum cover
Wall stem (all faces) 2½" minimum cover

At the Contractor's option WV Series bars may be spliced at top of the footing in order to facilitate construction. Splice lengths shall be in accordance with Table C on Sheet 1. No additional compensation shall be provided for the increase in reinforcing steel quantity due to the splices.

Miscellaneous

Weepholes shall be placed at the lowest point feasible for free drainage away from the wing.

Four Type I Wings are to be used for straight crossings and skews up to 20°. Two Type I and two Type II Wings are to be used for skews from 25° to 45°. For skews above 45°, special design wings are required. The wingwall to be used for each culvert is shown on the BC series sheets.

The designs shown are applicable for a 45° skew with the roadway and other conditions indicated. Any change in these conditions invalidates these designs.

Quantities shown are for one wing.

WING	Wall Quantities		qr_min ksf High End	qr_min ksf Low End
	Concrete CY	Reinforcement LB		
A	2.1	201	1.10	0.47
B	2.5	236	1.28	0.47
C	2.9	263	1.50	0.47
D	3.4	292	1.68	0.47
E	3.9	331	1.88	0.47
F	4.5	361	2.08	0.47
G	5.1	416	2.28	0.47
H	5.9	467	2.49	0.47
I	6.6	671	2.71	0.47
J	7.3	731	2.93	0.47
K	8.0	853	3.15	0.47
L	8.9	935	3.25	0.47
M	9.6	972	3.61	0.47
N	10.6	1064	3.70	0.47
O	11.8	1209	3.80	0.47
P	12.6	1304	4.17	0.47
Q	13.7	1463	4.26	0.47
R	14.9	1670	4.35	0.47
S	17.2	1800	4.64	0.51
T	19.9	2056	4.93	0.55
U	21.4	2504	5.04	0.55
V	23.0	2779	5.15	0.55
W	24.0	3342	5.49	0.55
X	26.9	3415	5.83	0.55
Y	28.7	3602	5.93	0.55
Z	30.6	3846	6.04	0.55
AA	32.5	4425	6.16	0.55
BB	34.5	5408	6.28	0.55
CC	36.3	5571	6.51	0.55
DD	38.7	6063	6.53	0.55
EE	42.1	7235	6.48	0.55

A COPY OF THE ORIGINAL SEALED AND SIGNED DRAWING IS ON FILE IN THE CENTRAL OFFICE

VDOT
ROAD AND BRIDGE STANDARDS

SHEET 1 OF 8 | REVISION DATE
1006.09 | 07/12

WING DETAIL

1½: 1 FILL SLOPE - TYPE II

VIRGINIA DEPARTMENT OF TRANSPORTATION

SPECIFICATION REFERENCE

BCW-12

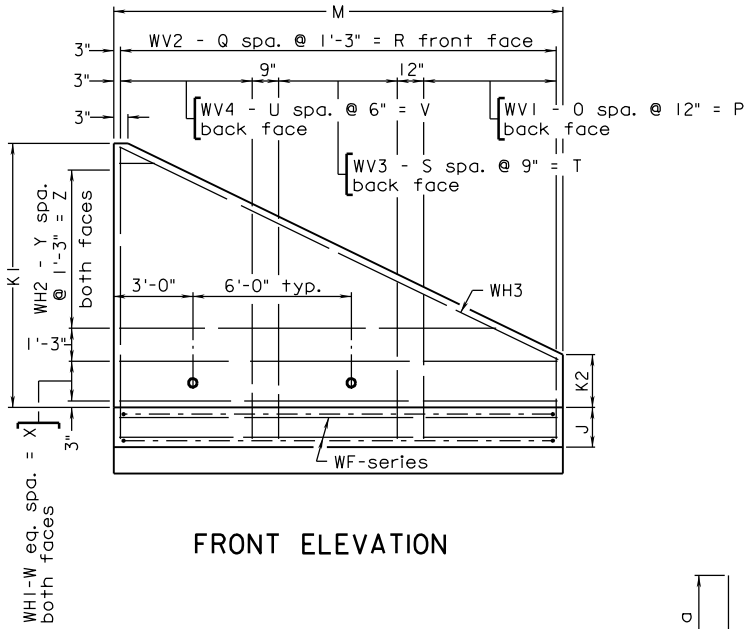

FRONT ELEVATION

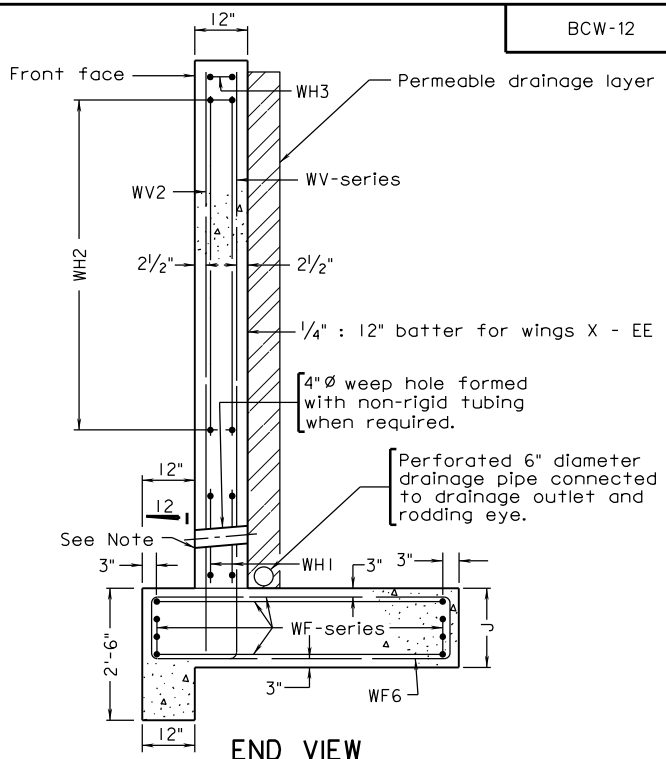

END VIEW

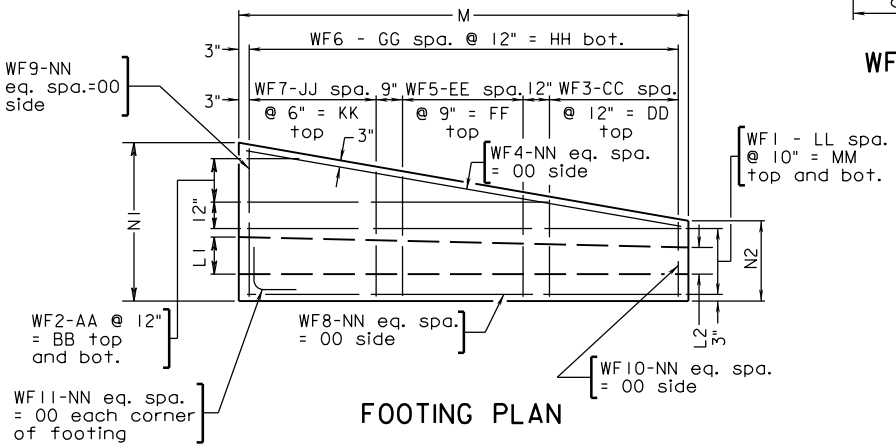

FOOTING PLAN

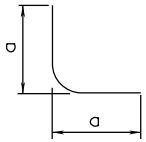

WF11

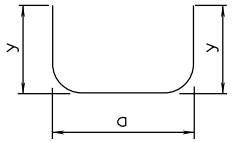

WF1 TO WF3, WF5 TO WF7

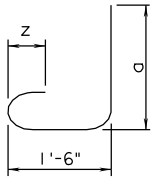

WV1, WV3, WV4

TABLE A	
Wall	y
A-W	9½"
X	1'-0½"
Y-CC	1'-3½"
DD-EE	1'-9½"

TABLE B		
Bar Size	Pin Dia.	Z
#3	2¼"	4"
#4	3"	4½"
#5	3¾"	5"
#6	4½"	6"
#7	5¼"	7"
#8	6"	8"
#9	9"	10⅛"

TABLE C	
Bar Size	Splice Length
#4	1'- 9"
#5	2'- 4"
#6	2'- 7"
#7	3'- 3"
#8	4'- 2"
#9	5'- 4"

A COPY OF THE ORIGINAL SEALED AND SIGNED DRAWING AND DESIGN STATEMENT IS ON FILE IN THE CENTRAL OFFICE.

SPECIFICATION REFERENCE

WING DETAIL

1½: 1 FILL SLOPE - TYPE II

VIRGINIA DEPARTMENT OF TRANSPORTATION

VDOT
ROAD AND BRIDGE STANDARDS

REVISION DATE 07/16

SHEET 2 OF 8

1006.10

BCW-12

WING	WALL DIMENSIONS								No. WEEP HOLES	FOOTING BAR SPACINGS													
	J	K1	K2	L1	L2	M	N1	N2		WF1		WF2		WF3		WF4, WF8 to WF10		WF5		WF6		WF7	
										LL	MM	AA	BB	CC	DD	NN	OO	EE	FF	GG	HH	JJ	KK
A	1'-6"	4'-0"	1'-0"	1'-0"	1'-0"	6'-6"	4'-0"	3'-0"	-	3	2'-6"	-	-	7	7'-0"	1	0'-8"	-	-	6	6'-0"	-	-
B	1'-6"	4'-6"	1'-0"	1'-0"	1'-0"	7'-6"	4'-0"	3'-0"	-	3	2'-6"	-	-	8	8'-0"	1	0'-8"	-	-	7	7'-0"	-	-
C	1'-6"	5'-0"	1'-0"	1'-0"	1'-0"	8'-6"	4'-0"	3'-0"	-	3	2'-6"	-	-	9	9'-0"	1	0'-8"	-	-	8	8'-0"	-	-
D	1'-6"	5'-6"	1'-0"	1'-0"	1'-0"	9'-6"	4'-3"	3'-0"	-	3	2'-6"	-	-	10	10'-0"	1	0'-8"	-	-	9	9'-0"	-	-
E	1'-6"	6'-0"	1'-0"	1'-0"	1'-0"	10'-6"	4'-6"	3'-0"	-	3	2'-6"	-	-	11	11'-0"	1	0'-8"	-	-	10	10'-0"	-	-
F	1'-6"	6'-6"	1'-0"	1'-0"	1'-0"	11'-6"	4'-9"	3'-0"	-	3	2'-6"	-	-	12	12'-0"	1	0'-8"	-	-	11	11'-0"	-	-
G	1'-6"	7'-0"	1'-0"	1'-0"	1'-0"	12'-6"	5'-0"	3'-0"	-	3	2'-6"	-	-	7	7'-0"	1	0'-8"	5	3'-9"	12	12'-0"	-	-
H	1'-6"	7'-6"	1'-0"	1'-0"	1'-0"	14'-0"	5'-3"	3'-0"	-	3	2'-6"	-	-	8	8'-0"	1	0'-8"	6	4'-6"	13	13'-0"	-	-
I	1'-6"	8'-0"	1'-0"	1'-0"	1'-0"	15'-0"	5'-6"	3'-0"	-	3	2'-6"	1	1'-0"	6	6'-0"	1	0'-8"	8	6'-0"	14	14'-0"	12	6'-0"
J	1'-6"	8'-6"	1'-0"	1'-0"	1'-0"	16'-0"	5'-9"	3'-0"	-	3	2'-6"	1	1'-0"	6	6'-0"	1	0'-8"	8	6'-0"	15	15'-0"	12	6'-0"
K	1'-6"	9'-0"	1'-0"	1'-0"	1'-0"	17'-0"	6'-0"	3'-0"	-	3	2'-6"	1	1'-0"	6	6'-0"	1	0'-8"	8	6'-0"	16	16'-0"	12	6'-0"
L	1'-6"	9'-6"	1'-0"	1'-0"	1'-0"	18'-0"	6'-6"	3'-0"	-	3	2'-6"	2	2'-0"	6	6'-0"	1	0'-8"	8	6'-0"	17	17'-0"	12	6'-0"
M	1'-6"	10'-0"	1'-0"	1'-0"	1'-0"	19'-0"	6'-6"	3'-0"	-	3	2'-6"	2	2'-0"	6	6'-0"	1	0'-8"	8	6'-0"	18	18'-0"	12	6'-0"
N	1'-6"	10'-6"	1'-0"	1'-0"	1'-0"	20'-0"	7'-0"	3'-0"	1	3	2'-6"	2	2'-0"	7	7'-0"	1	0'-8"	10	7'-6"	19	19'-0"	14	7'-0"
O	1'-6"	11'-0"	1'-0"	1'-0"	1'-0"	21'-6"	7'-6"	3'-0"	1	3	2'-6"	3	3'-0"	7	7'-0"	1	0'-8"	10	7'-6"	21	20'-0"	14	7'-0"
P	1'-6"	11'-6"	1'-0"	1'-0"	1'-0"	22'-6"	7'-6"	3'-0"	1	3	2'-6"	3	3'-0"	8	8'-0"	1	0'-8"	11	8'-3"	22	22'-0"	16	8'-0"
Q	1'-6"	12'-0"	1'-0"	1'-0"	1'-0"	23'-6"	8'-0"	3'-0"	1	3	2'-6"	3	3'-0"	8	8'-0"	1	0'-8"	11	8'-3"	23	23'-0"	16	8'-0"
R	1'-6"	12'-6"	1'-0"	1'-0"	1'-0"	24'-6"	8'-6"	3'-0"	1	3	2'-6"	4	4'-0"	8	8'-0"	1	0'-8"	11	8'-3"	24	24'-0"	16	8'-0"
S	1'-9"	13'-0"	1'-0"	1'-0"	1'-0"	25'-6"	9'-0"	3'-0"	2	3	2'-6"	4	4'-0"	8	8'-0"	1	0'-11"	11	8'-3"	25	25'-0"	16	8'-0"
T	2'-0"	13'-6"	1'-0"	1'-0"	1'-0"	26'-6"	9'-6"	3'-0"	2	3	2'-6"	5	5'-0"	9	9'-0"	1	1'-2"	12	9'-0"	26	26'-0"	18	9'-0"
U	2'-0"	14'-0"	1'-0"	1'-0"	1'-0"	27'-6"	10'-0"	3'-0"	2	3	2'-6"	5	5'-0"	9	9'-0"	1	1'-2"	12	9'-0"	27	27'-0"	18	9'-0"
V	2'-0"	14'-6"	1'-0"	1'-0"	1'-0"	28'-6"	10'-6"	3'-0"	2	3	2'-6"	6	6'-0"	10	10'-0"	1	1'-2"	14	10'-6"	28	28'-0"	20	10'-0"
W	2'-0"	15'-0"	1'-0"	1'-0"	1'-0"	29'-6"	10'-6"	3'-0"	2	3	2'-6"	6	6'-0"	10	10'-0"	1	1'-2"	14	10'-6"	29	29'-0"	20	10'-0"
X	2'-0"	15'-6"	1'-0"	1'-3 3/4"	1'-1 1/8"	31'-0"	11'-0"	3'-0"	3	3	2'-6"	6	6'-0"	11	11'-0"2	2	0'-7"	15	11'-3"	30	30'-0"	22	11'-0"
Y	2'-0"	16'-0"	1'-0"	1'-4"	1'-1 1/8"	32'-0"	11'-6"	3'-0"	3	3	2'-6"	7	7'-0"	11	11'-0"	2	0'-7"	15	11'-3"	31	31'-0"	22	11'-0"
Z	2'-0"	16'-6"	1'-0"	1'-4 1/8"	1'-1 1/4"	33'-0"	12'-0"	3'-0"	3	3	2'-6"	7	7'-0"	11	11'-0"	2	0'-7"	15	11'-3"	32	32'-0"	22	11'-0"
AA	2'-0"	17'-0"	1'-0"	1'-4 1/4"	1'-1 1/4"	34'-0"	12'-6"	3'-0"	3	3	2'-6"	8	8'-0"	11	11'-0"	2	0'-7"	15	11'-3"	33	33'-0"	22	11'-0"
BB	2'-0"	17'-6"	1'-0"	1'-4 3/8"	1'-1 1/4"	35'-0"	13'-0"	3'-0"	4	3	2'-6"	8	8'-0"	12	12'-0"	2	0'-7"	16	12'-0"	34	34'-0"	24	12'-0"
CC	2'-0"	18'-0"	1'-0"	1'-4 1/2"	1'-1 1/4"	36'-0"	13'-3"	3'-0"	4	3	2'-6"	8	8'-0"	12	12'-0"	2	0'-7"	16	12'-0"	35	35'-0"	24	12'-0"
DD	2'-0"	18'-6"	1'-0"	1'-4 5/8"	1'-1 3/8"	37'-0"	14'-0"	3'-0"	4	3	2'-6"	9	9'-0"	13	13'-0"	2	0'-7"	18	13'-6"	36	36'-0"	26	13'-0"
EE	2'-0"	19'-0"	1'-0"	1'-4 3/4"	1'-1 3/8"	38'-6"	15'-0"	3'-0"	4	3	2'-6"	10	10'-0"	13	13'-0"	2	0'-7"	18	13'-6"	38	38'-0"	26	13'-0"

A COPY OF THE ORIGINAL SEALED AND SIGNED DRAWING IS ON FILE IN THE CENTRAL OFFICE

VDOT
ROAD AND BRIDGE STANDARDS

SHEET 3 OF 8 | REVISION DATE
1006.11 | 07/12

WING DETAILS

1 1/2 : 1 FILL SLOPE - TYPE II

VIRGINIA DEPARTMENT OF TRANSPORTATION

SPECIFICATION REFERENCE

BCW-12

WING	WF1				WF2								WF3						
	SIZE	a	LENGTH	* Ea	SIZE	a			LENGTH			* Ea	SIZE	a			LENGTH		
						FROM	TO	VARY BY	FROM	TO	VARY BY			FROM	TO	VARY BY	FROM	TO	VARY BY
A	4	5'-11"	7'-3"	2	4	1'-0"	7'-6"	-	2'-5"	8'-11"	-	2	4	3'-5"	2'-4"	0'-1 7/8"	4'-9"	3'-8"	0'-1 7/8"
B	4	6'-11"	8'-3"	2	4	1'-3"	8'-9"	-	2'-8"	10'-2"	-	2	4	3'-5"	2'-4"	0'-1 1/2"	4'-9"	3'-8"	0'-1 1/2"
C	4	7'-11"	9'-3"	2	4	1'-6"	10'-0"	-	2'-11"	11'-5"	-	2	4	3'-5"	2'-4"	0'-1 3/8"	4'-9"	3'-8"	0'-1 3/8"
D	4	8'-11"	10'-3"	2	4	3'-2"	10'-9"	-	4'-7"	12'-2"	-	2	4	3'-8"	2'-4"	0'-1 1/2"	5'-0"	3'-8"	0'-1 1/2"
E	4	9'-11"	11'-3"	2	4	4'-8"	4'-8"	-	6'-0"	6'-0"	-	2	4	3'-11"	2'-4"	0'-1 5/8"	5'-3"	3'-8"	0'-1 5/8"
F	4	10'-11"	12'-3"	2	4	5'-11"	5'-11"	-	7'-4"	7'-4"	-	2	4	4'-2"	2'-4"	0'-1 7/8"	5'-6"	3'-8"	0'-1 7/8"
G	4	11'-11"	13'-3"	2	4	7'-2"	7'-2"	-	8'-7"	8'-7"	-	2	4	3'-7"	2'-6"	0'-1 7/8"	5'-0"	3'-10"	0'-1 7/8"
H	4	13'-5"	14'-9"	2	4	8'-9"	8'-9"	-	10'-1"	10'-1"	-	2	4	3'-9"	2'-5"	0'-1 7/8"	5'-1"	3'-10"	0'-1 7/8"
I	4	14'-5"	15'-9"	2	4	9'-11"	3'-11"	6'-0"	11'-3"	5'-3"	6'-0"	2	4	2'-7"	1'-7"	0'-2"	4'-0"	3'-0"	0'-2"
J	4	15'-5"	16'-9"	2	4	11'-0"	5'-2"	5'-9 3/4"	12'-5"	6'-7"	5'-9 3/4"	2	4	2'-9"	1'-8"	0'-2"	4'-2"	3'-1"	0'-2"
K	4	16'-5"	17'-9"	2	4	12'-2"	6'-6"	5'-8"	13'-6"	7'-10"	5'-8"	2	4	2'-11"	1'-11"	0'-2"	4'-4"	3'-3"	0'-2"
L	4	17'-5"	18'-9"	2	4	13'-6"	3'-3"	5'-1 5/8"	14'-11"	4'-7"	5'-1 5/8"	2	4	3'-2"	2'-0"	0'-2 1/4"	4'-7"	3'-5"	0'-2 1/4"
M	4	18'-5"	19'-9"	2	4	14'-4"	3'-5"	5'-5 1/8"	15'-8"	4'-10"	5'-5 1/8"	2	4	3'-4"	2'-3"	0'-2 1/8"	4'-9"	3'-7"	0'-2 1/8"
N	4	19'-5"	20'-9"	2	4	15'-8"	5'-8"	5'-0"	17'-0"	7'-0"	5'-0"	2	4	3'-1"	1'-9"	0'-2 3/8"	4'-6"	3'-1"	0'-2 3/8"
O	4	20'-11"	22'-3"	2	4	17'-4"	3'-0"	4'-9 1/4"	18'-8"	4'-4"	4'-9 1/4"	2	4	3'-6"	2'-0"	0'-2 1/2"	4'-10"	3'-4"	0'-2 1/2"
P	4	21'-11"	23'-3"	2	4	18'-2"	3'-2"	5'-0"	19'-6"	4'-6"	5'-0"	2	4	3'-3"	1'-8"	0'-2 3/8"	4'-8"	3'-1"	0'-2 3/8"
Q	4	22'-11"	24'-3"	2	4	19'-4"	5'-3"	4'-8 3/8"	20'-9"	6'-8"	4'-8 3/8"	2	4	3'-6"	1'-10"	0'-2 1/2"	4'-11"	3'-2"	0'-2 1/2"
R	4	23'-11"	25'-3"	2	4	20'-6"	2'-9"	4'-5 3/8"	21'-11"	4'-1"	4'-5 3/8"	2	4	3'-10"	2'-0"	0'-2 5/8"	5'-2"	3'-5"	0'-2 5/8"
S	4	24'-11"	26'-9"	2	4	21'-8"	4'-8"	4'-3"	23'-7"	6'-7"	4'-3"	2	4	4'-1"	2'-3"	0'-2 7/8"	6'-0"	4'-1"	0'-2 7/8"
T	4	25'-11"	28'-3"	2	4	22'-10"	2'-5"	4'-0 7/8"	25'-2"	4'-10"	4'-0 7/8"	2	4	4'-0"	1'-10"	0'-2 7/8"	6'-5"	4'-2"	0'-2 7/8"
U	4	26'-11"	29'-3"	2	4	23'-11"	4'-3"	3'-11 1/8"	26'-4"	6'-8"	3'-11 1/8"	2	4	4'-4"	2'-0"	0'-3"	6'-8"	4'-5"	0'-3"
V	4	27'-11"	30'-3"	2	4	25'-0"	2'-3"	3'-9 1/2"	27'-5"	4'-7"	3'-9 1/2"	2	4	4'-0"	1'-4"	0'-3 1/8"	6'-4"	3'-9"	0'-3 1/8"
W	4	28'-11"	31'-3"	2	5	25'-11"	2'-4"	3'-11 1/8"	28'-3"	4'-8"	3'-11 1/8"	2	4	4'-2"	1'-8"	0'-3"	6'-7"	4'-0"	0'-3"
X	4	30'-5"	32'-9"	2	5	27'-6"	4'-3"	3'-10 1/2"	29'-10"	6'-7"	3'-10 1/2"	2	4	4'-2"	1'-4"	0'-3"	6'-6"	3'-8"	0'-3"
Y	4	31'-5"	33'-9"	2	5	28'-7"	2'-2"	3'-9 1/8"	30'-10"	4'-6"	3'-9 1/8"	2	4	4'-6"	1'-7"	0'-3 1/8"	6'-10"	3'-11"	0'-3 1/8"
Z	4	32'-5"	34'-9"	2	5	29'-8"	4'-0"	3'-8"	31'-11"	6'-3"	3'-8"	2	4	4'-10"	1'-10"	0'-3 1/4"	7'-2"	4'-2"	0'-3 1/4"
AA	4	33'-5"	35'-9"	2	5	30'-8"	2'-1"	3'-6 7/8"	33'-0"	4'-5"	3'-6 7/8"	2	4	5'-2"	2'-1"	0'-3 1/4"	7'-6"	4'-5"	0'-3 1/4"
BB	4	34'-5"	36'-9"	2	5	31'-9"	3'-9"	3'-6"	34'-1"	6'-1"	3'-6"	2	4	5'-0"	1'-7"	0'-3 3/8"	7'-4"	3'-11"	0'-3 3/8"
CC	4	35'-5"	37'-9"	2	5	32'-9"	4'-8"	3'-6 1/8"	35'-1"	7'-0"	3'-6 1/8"	2	4	5'-3"	1'-10"	0'-3 3/8"	7'-8"	4'-3"	0'-3 3/8"
DD	4	36'-5"	38'-9"	2	5	33'-10"	3'-7"	3'-4 1/4"	36'-2"	5'-11"	3'-4 1/4"	2	4	4'-11"	1'-1"	0'-3 1/2"	7'-4"	3'-5"	0'-3 1/2"
EE	4	37'-11"	40'-3"	2	5	35'-6"	3'-5"	3'-2 3/8"	37'-10"	5'-9"	3'-2 3/8"	2	4	5'-6"	1'-6"	0'-3 5/8"	7'-11"	3'-10"	0'-3 5/8"

A COPY OF THE ORIGINAL SEALED AND SIGNED DRAWING IS ON FILE IN THE CENTRAL OFFICE

SPECIFICATION REFERENCE

WING DETAILS

1 1/2 : 1 FILL SLOPE - TYPE II

VIRGINIA DEPARTMENT OF TRANSPORTATION

VDOT

ROAD AND BRIDGE STANDARDS

REVISION DATE 07/12

SHEET 4 OF 8

1006.12

BCW-12

WING	WF4		WF5							WF6						
	SIZE	LENGTH	SIZE	a			LENGTH			SIZE	a			LENGTH		
				FROM	TO	VARY BY	FROM	TO	VARY BY		FROM	TO	VARY BY	FROM	TO	VARY BY
A	4	5'-8"	-	-	-	-	-	-	-	4	3'-4"	2'-5"	0'-1⅞"	4'-9"	3'-9"	0'-1⅞"
B	4	6'-8"	-	-	-	-	-	-	-	4	3'-4"	2'-5"	0'-1½"	4'-9"	3'-9"	0'-1½"
C	4	7'-8"	-	-	-	-	-	-	-	4	3'-4"	2'-5"	0'-1⅜"	4'-9"	3'-9"	0'-1⅜"
D	4	8'-9"	-	-	-	-	-	-	-	4	3'-7"	2'-5"	0'-1½"	5'-0"	3'-9"	0'-1½"
E	4	9'-9"	-	-	-	-	-	-	-	4	3'-10"	2'-5"	0'-1⅝"	5'-3"	3'-9"	0'-1⅝"
F	4	10'-9"	-	-	-	-	-	-	-	4	4'-1"	2'-5"	0'-1⅞"	5'-6"	3'-9"	0'-1⅞"
G	4	11'-9"	4	4'-4"	3'-9"	0'-1⅜"	5'-9"	5'-2"	0'-1⅜"	4	4'-4"	2'-5"	0'-1⅞"	5'-9"	3'-9"	0'-1⅞"
H	4	13'-4"	4	4'-8"	3'-11"	0'-1⅜"	6'-0"	5'-3"	0'-1⅜"	4	4'-7"	2'-6"	0'-1⅞"	6'-0"	3'-10"	0'-1⅞"
I	4	14'-4"	4	3'-9"	2'-9"	0'-1½"	5'-2"	4'-2"	0'-1½"	4	4'-10"	2'-6"	0'-2"	6'-3"	3'-11"	0'-2"
J	4	15'-4"	4	4'-0"	2'-11"	0'-1½"	5'-4"	4'-4"	0'-1½"	4	5'-1"	2'-6"	0'-2"	6'-5"	3'-11"	0'-2"
K	4	16'-5"	5	4'-2"	3'-1"	0'-1½"	5'-6"	4'-5"	0'-1½"	4	5'-4"	2'-6"	0'-2"	6'-8"	3'-11"	0'-2"
L	4	17'-6"	5	4'-7"	3'-5"	0'-1¾"	5'-11"	4'-9"	0'-1¾"	4	5'-10"	2'-6"	0'-2¼"	7'-2"	3'-11"	0'-2¼"
M	4	18'-5"	5	4'-8"	3'-6"	0'-1⅝"	5'-11"	4'-10"	0'-1⅝"	4	5'-10"	2'-6"	0'-2⅛"	7'-2"	3'-11"	0'-2⅛"
N	4	19'-6"	4	4'-10"	3'-4"	0'-1¾"	6'-2"	4'-8"	0'-1¾"	4	6'-4"	2'-6"	0'-2⅜"	7'-8"	3'-11"	0'-2⅜"
O	4	21'-1"	4	5'-3"	3'-8"	0'-1⅞"	6'-7"	5'-1"	0'-1⅞"	4	6'-10"	2'-5"	0'-2½"	8'-2"	3'-10"	0'-2½"
P	4	22'-1"	4	5'-1"	3'-6"	0'-1¾"	6'-6"	4'-10"	0'-1¾"	4	6'-10"	2'-5"	0'-2⅜"	8'-2"	3'-10"	0'-2⅜"
Q	4	23'-2"	4	5'-6"	3'-9"	0'-1⅞"	6'-11"	5'-1"	0'-1⅞"	4	7'-4"	2'-5"	0'-2½"	8'-8"	3'-10"	0'-2½"
R	4	24'-3"	4	5'-11"	4'-1"	0'-2"	7'-4"	5'-5"	0'-2"	4	7'-10"	2'-5"	0'-2⅝"	9'-2"	3'-10"	0'-2⅝"
S	4	25'-4"	4	6'-4"	4'-4"	0'-2"	8'-2"	6'-3"	0'-2"	4	8'-4"	2'-5"	0'-2⅞"	10'-2"	4'-4"	0'-2⅞"
T	4	26'-5"	4	6'-6"	4'-3"	0'-2⅛"	8'-10"	6'-8"	0'-2⅛"	4	8'-10"	2'-5"	0'-2⅞"	11'-2"	4'-10"	0'-2⅞"
U	4	27'-6"	4	6'-10"	4'-7"	0'-2¼"	9'-3"	6'-11"	0'-2¼"	4	9'-4"	2'-5"	0'-3"	11'-8"	4'-10"	0'-3"
V	4	28'-7"	4	7'-0"	4'-3"	0'-2¼"	9'-5"	6'-8"	0'-2¼"	4	9'-10"	2'-5"	0'-3⅛"	12'-2"	4'-10"	0'-3⅛"
W	4	29'-7"	5	7'-1"	4'-5"	0'-2¼"	9'-5"	6'-9"	0'-2¼"	5	9'-10"	2'-5"	0'-3"	12'-2"	4'-9"	0'-3"
X	4	31'-2"	5	7'-4"	4'-5"	0'-2¼"	9'-8"	6'-9"	0'-2¼"	5	10'-4"	2'-7"	0'-3"	12'-8"	4'-11"	0'-3"
Y	4	32'-3"	5	7'-9"	4'-9"	0'-2⅜"	10'-1"	7'-1"	0'-2⅜"	5	10'-10"	2'-7"	0'-3⅛"	13'-2"	4'-11"	0'-3⅛"
Z	4	33'-4"	5	8'-2"	5'-1"	0'-2⅜"	10'-6"	7'-5"	0'-2⅜"	5	11'-4"	2'-7"	0'-3¼"	13'-8"	4'-11"	0'-3¼"
AA	4	34'-5"	6	8'-7"	5'-5"	0'-2½"	10'-10"	7'-8"	0'-2½"	5	11'-10"	2'-7"	0'-3¼"	14'-2"	4'-11"	0'-3¼"
BB	4	35'-7"	6	8'-8"	5'-3"	0'-2½"	11'-0"	7'-7"	0'-2½"	5	12'-4"	2'-7"	0'-3⅜"	14'-8"	4'-11"	0'-3⅜"
CC	4	36'-7"	6	9'-0"	5'-7"	0'-2½"	11'-3"	7'-10"	0'-2½"	5	12'-7"	2'-7"	0'-3⅜"	14'-11"	4'-11"	0'-3⅜"
DD	4	37'-9"	6	9'-3"	5'-3"	0'-2⅝"	11'-6"	7'-6"	0'-2⅝"	5	13'-4"	2'-7"	0'-3½"	15'-7"	4'-11"	0'-3½"
EE	4	39'-6"	6	10'-1"	5'-10"	0'-2¾"	12'-4"	8'-1"	0'-2¾"	5	14'-4"	2'-5"	0'-3⅝"	16'-7"	4'-9"	0'-3⅝"

A COPY OF THE ORIGINAL SEALED AND SIGNED DRAWING IS ON FILE IN THE CENTRAL OFFICE

VDOT
ROAD AND BRIDGE STANDARDS

SHEET 5 OF 8 | REVISION DATE
1006.13 | 07/12

WING DETAILS

1½: 1 FILL SLOPE - TYPE II

VIRGINIA DEPARTMENT OF TRANSPORTATION

SPECIFICATION REFERENCE

WING	WF7							WF8		WF9		WF10		WF11			
	SIZE	a			LENGTH			SIZE	LENGTH	SIZE	LENGTH	SIZE	LENGTH	SIZE	a	LENGTH	* Ea
		FROM	TO	VARY BY	FROM	TO	VARY BY										
A	-	-	-	-	-	-	-	4	5'-8"	4	3'-2"	4	2'-2"	4	2'-2"	4'-2"	4
B	-	-	-	-	-	-	-	4	6'-8"	4	3'-2"	4	2'-2"	4	2'-2"	4'-2"	4
C	-	-	-	-	-	-	-	4	7'-8"	4	3'-2"	4	2'-2"	4	2'-2"	4'-2"	4
D	-	-	-	-	-	-	-	4	8'-8"	4	3'-5"	4	2'-2"	4	2'-2"	4'-2"	4
E	-	-	-	-	-	-	-	4	9'-8"	4	3'-8"	4	2'-2"	4	2'-2"	4'-2"	4
F	-	-	-	-	-	-	-	4	10'-8"	4	3'-11"	4	2'-2"	4	2'-2"	4'-2"	4
G	-	-	-	-	-	-	-	4	11'-8"	4	4'-2"	4	2'-2"	4	2'-2"	4'-2"	4
H	-	-	-	-	-	-	-	4	13'-2"	4	4'-5"	4	2'-2"	4	2'-2"	4'-2"	4
I	5	4'-11"	3'-11"	0'-0 7/8"	6'-2"	5'-2"	0'-0 7/8"	4	14'-2"	4	4'-8"	4	2'-2"	4	2'-2"	4'-2"	4
J	5	5'-1"	4'-1"	0'-1"	6'-5"	5'-5"	0'-1"	4	15'-2"	4	4'-11"	4	2'-2"	4	2'-2"	4'-2"	4
K	5	5'-4"	4'-4"	0'-1"	6'-8"	5'-8"	0'-1"	4	16'-2"	4	5'-2"	4	2'-2"	4	2'-2"	4'-2"	4
L	5	5'-10"	4'-8"	0'-1 1/8"	7'-2"	6'-0"	0'-1 1/8"	4	17'-2"	4	5'-8"	4	2'-2"	4	2'-2"	4'-2"	4
M	5	5'-10"	4'-9"	0'-1"	7'-2"	6'-1"	0'-1"	4	18'-2"	4	5'-8"	4	2'-2"	4	2'-2"	4'-2"	4
N	5	6'-4"	5'-0"	0'-1 1/8"	7'-8"	6'-3"	0'-1 1/8"	4	19'-2"	4	6'-2"	4	2'-2"	4	2'-2"	4'-2"	4
O	5	6'-10"	5'-5"	0'-1 1/4"	8'-2"	6'-9"	0'-1 1/4"	4	20'-8"	4	6'-8"	4	2'-2"	4	2'-2"	4'-2"	4
P	5	6'-10"	5'-3"	0'-1 1/8"	8'-2"	6'-7"	0'-1 1/8"	4	21'-8"	4	6'-8"	4	2'-2"	4	2'-2"	4'-2"	4
Q	6	7'-4"	5'-8"	0'-1 1/4"	8'-8"	6'-11"	0'-1 1/4"	4	22'-8"	4	7'-2"	4	2'-2"	4	2'-2"	4'-2"	4
R	6	7'-10"	6'-1"	0'-1 1/4"	9'-2"	7'-4"	0'-1 1/4"	4	23'-8"	4	7'-8"	4	2'-2"	4	2'-2"	4'-2"	4
S	6	8'-4"	6'-6"	0'-1 3/8"	10'-2"	8'-3"	0'-1 3/8"	4	24'-8"	4	8'-2"	4	2'-2"	4	2'-2"	4'-2"	4
T	6	8'-10"	6'-7"	0'-1 3/8"	11'-2"	8'-11"	0'-1 3/8"	4	25'-8"	4	8'-8"	4	2'-2"	4	2'-2"	4'-2"	4
U	7	9'-4"	7'-1"	0'-1 1/2"	11'-7"	9'-3"	0'-1 1/2"	4	26'-8"	4	9'-2"	4	2'-2"	4	2'-2"	4'-2"	4
V	7	9'-10"	7'-3"	0'-1 1/2"	12'-1"	9'-5"	0'-1 1/2"	4	27'-8"	4	9'-8"	4	2'-2"	4	2'-2"	4'-2"	4
W	7	9'-10"	7'-4"	0'-1 1/2"	12'-1"	9'-6"	0'-1 1/2"	4	28'-8"	4	9'-8"	4	2'-2"	4	2'-2"	4'-2"	4
X	7	10'-4"	7'-6"	0'-1 1/2"	12'-7"	9'-9"	0'-1 1/2"	4	30'-2"	4	10'-2"	4	2'-2"	4	2'-2"	4'-2"	4
Y	7	10'-10"	7'-11"	0'-1 1/2"	13'-1"	10'-2"	0'-1 1/2"	4	31'-2"	4	10'-8"	4	2'-2"	4	2'-2"	4'-2"	4
Z	7	11'-4"	8'-4"	0'-1 5/8"	13'-7"	10'-7"	0'-1 5/8"	4	32'-2"	4	11'-2"	4	2'-2"	4	2'-2"	4'-2"	4
AA	7	11'-10"	8'-9"	0'-1 5/8"	14'-1"	11'-0"	0'-1 5/8"	4	33'-2"	4	11'-8"	4	2'-2"	4	2'-2"	4'-2"	4
BB	8	12'-4"	8'-11"	0'-1 5/8"	14'-6"	11'-1"	0'-1 5/8"	4	34'-2"	4	12'-2"	4	2'-2"	4	2'-2"	4'-2"	4
CC	8	12'-7"	9'-2"	0'-1 5/8"	14'-9"	11'-4"	0'-1 5/8"	4	35'-2"	4	12'-5"	4	2'-2"	4	2'-2"	4'-2"	4
DD	8	13'-4"	9'-6"	0'-1 3/4"	15'-6"	11'-8"	0'-1 3/4"	4	36'-2"	4	13'-2"	4	2'-2"	4	2'-2"	4'-2"	4
EE	9	14'-4"	10'-3"	0'-1 3/4"	16'-4"	12'-4"	0'-1 3/4"	4	37'-8"	4	14'-2"	4	2'-2"	4	2'-2"	4'-2"	4

A COPY OF THE ORIGINAL SEALED AND SIGNED DRAWING IS ON FILE IN THE CENTRAL OFFICE

SPECIFICATION REFERENCE

WING DETAILS

1 1/2 : 1 FILL SLOPE - TYPE II

VIRGINIA DEPARTMENT OF TRANSPORTATION

VDOT

ROAD AND BRIDGE STANDARDS

REVISION DATE 07/12

SHEET 6 OF 8

1006.14

BCW-12

WING	STEM BAR SPACINGS												WV1							WV2		
	WV1		WV2		WV3		WV4		WH1		WH2		SIZE	a			LENGTH			SIZE	LENGTH		
	O	P	Q	R	S	T	U	V	W	X	Y	Z		FROM	TO	VARY BY	FROM	TO	VARY BY		FROM	TO	VARY BY
A	7	7'-0"	4	5'-0"	-	-	-	-	-	-	1	1'-3"	4	4'-11"	1'-8"	0'-5½"	6'-10"	3'-7"	0'-5½"	4	4'-11"	2'-7"	0'-7"
B	8	8'-0"	5	6'-3"	-	-	-	-	1	0'-6"	1	1'-3"	4	5'-5"	1'-8"	0'-5⅝"	7'-4"	3'-7"	0'-5⅝"	4	5'-5"	2'-6"	0'-7"
C	9	9'-0"	6	7'-6"	-	-	-	-	-	-	2	2'-6"	4	5'-11"	1'-8"	0'-5⅝"	7'-10"	3'-7"	0'-5⅝"	4	5'-11"	2'-4"	0'-7⅛"
D	10	10'-0"	7	8'-9"	-	-	-	-	-	-	2	2'-6"	4	6'-5"	1'-8"	0'-5⅝"	8'-4"	3'-7"	0'-5⅝"	4	6'-5"	2'-3"	0'-7⅛"
E	11	11'-0"	8	10'-0"	-	-	-	-	-	-	3	3'-9"	4	6'-11"	1'-8"	0'-5¾"	8'-10"	3'-7"	0'-5¾"	4	6'-11"	2'-1"	0'-7⅛"
F	12	12'-0"	8	10'-0"	-	-	-	-	-	-	3	3'-9"	4	7'-5"	1'-8"	0'-5¾"	9'-4"	3'-7"	0'-5¾"	4	7'-5"	2'-7"	0'-7⅛"
G	7	7'-0"	9	11'-3"	5	3'-9"	-	-	1	0'-6"	3	3'-9"	4	5'-7"	2'-3"	0'-5¾"	7'-6"	4'-2"	0'-5¾"	4	7'-11"	2'-6"	0'-7⅛"
H	8	8'-0"	10	12'-6"	6	4'-6"	-	-	-	-	4	5'-0"	4	5'-9"	2'-1"	0'-5½"	7'-9"	4'-0"	0'-5½"	4	8'-5"	2'-7"	0'-7"
I	6	6'-0"	11	13'-9"	8	6'-0"	12	6'-0"	-	-	4	5'-0"	4	2'-6"	1'-8"	0'-5⅝"	4'-4"	3'-7"	0'-5⅝"	4	8'-11"	2'-6"	0'-7"
J	6	6'-0"	12	15'-0"	8	6'-0"	12	6'-0"	-	-	5	6'-3"	4	2'-11"	1'-8"	0'-5⅝"	4'-10"	3'-7"	0'-5⅝"	4	9'-5"	2'-4"	0'-7"
K	6	6'-0"	13	16'-3"	8	6'-0"	12	6'-0"	-	-	5	6'-3"	4	3'-5"	1'-8"	0'-5⅝"	5'-4"	3'-7"	0'-5⅝"	4	9'-11"	2'-3"	0'-7"
L	6	6'-0"	14	17'-6"	8	6'-0"	12	6'-0"	1	0'-6"	5	6'-3"	4	3'-11"	1'-8"	0'-5⅝"	5'-10"	3'-7"	0'-5⅝"	4	10'-5"	2'-2"	0'-7"
M	6	6'-0"	14	17'-6"	8	6'-0"	12	6'-0"	-	-	6	7'-6"	4	4'-5"	1'-8"	0'-5⅝"	6'-3"	3'-7"	0'-5⅝"	4	10'-11"	2'-7"	0'-7⅛"
N	7	7'-0"	15	18'-9"	10	7'-6"	14	7'-0"	-	-	6	7'-6"	4	3'-8"	1'-8"	0'-5⅝"	5'-7"	3'-7"	0'-5⅝"	4	11'-5"	2'-6"	0'-7⅛"
O	7	7'-0"	16	20'-0"	10	7'-6"	14	7'-0"	-	-	7	8'-9"	4	4'-4"	1'-8"	0'-5½"	6'-3"	3'-7"	0'-5½"	4	11'-11"	2'-7"	0'-7"
P	8	8'-0"	17	21'-3"	11	8'-3"	16	8'-0"	-	-	7	8'-9"	4	4'-0"	1'-8"	0'-5½"	5'-11"	3'-7"	0'-5½"	4	12'-5"	2'-6"	0'-7"
Q	8	8'-0"	18	22'-6"	11	8'-3"	16	8'-0"	1	0'-6"	7	8'-9"	4	4'-6"	1'-8"	0'-5⅝"	6'-4"	3'-7"	0'-5⅝"	4	12'-11"	2'-4"	0'-7"
R	8	8'-0"	19	23'-9"	11	8'-3"	16	8'-0"	-	-	8	10'-0"	4	4'-11"	1'-8"	0'-5⅝"	6'-10"	3'-7"	0'-5⅝"	4	13'-5"	2'-3"	0'-7"
S	8	8'-0"	20	25'-0"	11	8'-3"	16	8'-0"	-	-	8	10'-0"	4	5'-8"	1'-11"	0'-5⅝"	7'-7"	3'-10"	0'-5⅝"	4	14'-2"	2'-4"	0'-7"
T	9	9'-0"	20	25'-0"	12	9'-0"	18	9'-0"	-	-	9	11'-3"	4	5'-7"	1'-8"	0'-5⅝"	7'-6"	3'-7"	0'-5⅝"	4	14'-11"	3'-1"	0'-7"
U	9	9'-0"	21	26'-3"	12	9'-0"	18	9'-0"	-	-	9	11'-3"	4	6'-1"	1'-9"	0'-5⅝"	7'-11"	3'-8"	0'-5⅝"	4	15'-5"	3'-0"	0'-7"
V	10	10'-0"	22	27'-6"	14	10'-6"	20	10'-0"	1	0'-6"	9	11'-3"	4	5'-4"	1'-8"	0'-5⅝"	7'-3"	3'-7"	0'-5⅝"	4	15'-11"	2'-10"	0'-7⅛"
W	10	10'-0"	23	28'-9"	14	10'-6"	20	10'-0"	-	-	10	12'-6"	4	5'-10"	1'-8"	0'-5⅝"	7'-9"	3'-7"	0'-5⅝"	4	16'-5"	2'-9"	0'-7⅛"
X	11	11'-0"	24	30'-0"	15	11'-3"	22	11'-0"	-	-	10	12'-6"	4	5'-8"	1'-8"	0'-5⅝"	7'-7"	3'-7"	0'-5⅝"	4	16'-11"	2'-10"	0'-7"
Y	11	11'-0"	25	31'-3"	15	11'-3"	22	11'-0"	-	-	11	13'-9"	4	6'-2"	1'-8"	0'-5⅝"	8'-0"	3'-7"	0'-5⅝"	4	17'-5"	2'-9"	0'-7"
Z	11	11'-0"	26	32'-6"	15	11'-3"	22	11'-0"	-	-	11	13'-9"	4	6'-7"	1'-8"	0'-5⅝"	8'-6"	3'-7"	0'-5⅝"	4	17'-11"	2'-7"	0'-7"
AA	11	11'-0"	26	32'-6"	15	11'-3"	22	11'-0"	1	0'-6"	11	13'-9"	4	7'-1"	1'-11"	0'-5⅝"	9'-0"	3'-10"	0'-5⅝"	4	18'-5"	3'-1"	0'-7"
BB	12	12'-0"	27	33'-9"	16	12'-0"	36	18'-0"	-	-	12	15'-0"	4	3'-11"	1'-8"	0'-5⅝"	5'-10"	3'-7"	0'-5⅝"	4	18'-11"	3'-0"	0'-7"
CC	12	12'-0"	28	35'-0"	16	12'-0"	36	18'-0"	-	-	12	15'-0"	4	4'-5"	1'-8"	0'-5⅝"	6'-3"	3'-7"	0'-5⅝"	4	19'-5"	2'-10"	0'-7"
DD	13	13'-0"	29	36'-3"	18	13'-6"	39	19'-6"	-	-	13	16'-3"	4	3'-5"	1'-8"	0'-5⅝"	5'-4"	3'-7"	0'-5⅝"	4	19'-11"	2'-9"	0'-7"
EE	13	13'-0"	30	37'-6"	18	13'-6"	39	19'-6"	-	-	13	16'-3"	4	4'-2"	1'-8"	0'-5⅝"	6'-0"	3'-7"	0'-5⅝"	4	20'-5"	2'-10"	0'-7"

A COPY OF THE ORIGINAL SEALED AND SIGNED DRAWING IS ON FILE IN THE CENTRAL OFFICE

VDOT
ROAD AND BRIDGE STANDARDS

SHEET 7 OF 8 | REVISION DATE
1006.15 | 07/12

WING DETAILS

1½: 1 FILL SLOPE - TYPE II

VIRGINIA DEPARTMENT OF TRANSPORTATION

SPECIFICATION REFERENCE

BCW-12

WING	WV3							WV4							WH1			WH2					WH3	
	SIZE	a			LENGTH			SIZE	a			LENGTH			SIZE	LENGTH	• Ea	SIZE	LENGTH			• EA	SIZE	LENGTH
		FROM	TO	VARY BY	FROM	TO	VARY BY		FROM	TO	VARY BY	FROM	TO	VARY BY					FROM	TO	VARY BY			
A	-	-	-	-	-	-	-	-	-	-	-	-	-	_	4	6'-0"	2	4	4'-8"	2'-0"	2'-7½"	2	4	6'-8"
B	-	-	-	-	-	-	-	-	-	-	-	-	-	_	4	7'-0"	2	4	4'-7"	2'-0"	2'-6⅞"	2	4	7'-9"
C	-	-	-	-	-	-	-	-	-	-	-	-	-	_	4	8'-0"	2	4	7'-2"	2'-0"	2'-6⅞"	2	4	8'-11"
D	-	-	-	-	-	-	-	-	-	-	-	-	-	_	4	9'-0"	2	4	7'-2"	2'-0"	2'-6⅞"	2	4	10'-0"
E	-	-	-	-	-	-	-	-	-	-	-	-	-	_	4	10'-0"	2	4	9'-8"	1'-11"	2'-6¾"	2	4	11'-2"
F	-	-	-	-	-	-	-	-	-	-	-	-	-	_	4	11'-0"	2	4	9'-8"	1'-11"	2'-6¾"	2	4	12'-3"
G	4	7'-11"	6'-1"	0'-4¼"	9'-10"	8'-0"	0'-4¼"	-	-	-	-	-	-	_	4	12'-0"	2	4	9'-8"	1'-11"	2'-6¾"	2	4	13'-4"
H	4	8'-5"	6'-4"	0'-4⅛"	10'-4"	8'-3"	0'-4⅛"	-	-	-	-	-	-	_	4	13'-6"	2	4	12'-8"	2'-0"	2'-7⅞"	2	4	14'-11"
I	4	5'-9"	2'-11"	0'-4⅛"	7'-8"	4'-10"	0'-4⅛"	5	8'-11"	6'-1"	0'-2¾"	10'-10"	8'-1"	0'-2¾"	4	14'-6"	2	4	12'-7"	2'-0"	2'-7½"	2	4	16'-1"
J	4	6'-3"	3'-5"	0'-4⅛"	8'-2"	5'-4"	0'-4⅛"	5	9'-5"	6'-7"	0'-2¾"	11'-4"	8'-6"	0'-2¾"	4	15'-6"	2	4	15'-2"	2'-0"	2'-7½"	2	4	17'-2"
K	4	6'-9"	3'-11"	0'-4¼"	8'-7"	5'-9"	0'-4¼"	6	9'-11"	7'-1"	0'-2¾"	11'-11"	9'-1"	0'-2¾"	4	16'-6"	2	4	15'-1"	2'-0"	2'-7¼"	2	4	18'-3"
L	4	7'-3"	4'-4"	0'-4¼"	9'-1"	6'-3"	0'-4¼"	6	10'-5"	7'-7"	0'-2¾"	12'-5"	9'-7"	0'-2¾"	4	17'-6"	2	4	15'-1"	2'-0"	2'-7⅜"	2	4	19'-5"
M	4	7'-8"	4'-10"	0'-4¼"	9'-7"	6'-9"	0'-4¼"	6	10'-11"	8'-1"	0'-2¾"	12'-11"	10'-1"	0'-2¾"	4	18'-6"	2	4	17'-8"	2'-0"	2'-7¼"	2	4	20'-6"
N	4	7'-9"	4'-2"	0'-4¼"	9'-7"	6'-1"	0'-4¼"	6	11'-5"	8'-1"	0'-2¾"	13'-5"	10'-1"	0'-2¾"	4	19'-6"	2	4	17'-7"	2'-0"	2'-7⅛"	2	4	21'-8"
O	5	8'-4"	4'-10"	0'-4⅛"	10'-3"	6'-9"	0'-4⅛"	6	11'-11"	8'-8"	0'-2¾"	13'-11"	10'-8"	0'-2¾"	4	21'-0"	2	4	20'-8"	2'-0"	2'-7⅞"	2	4	23'-3"
P	5	8'-4"	4'-5"	0'-4⅛"	10'-3"	6'-5"	0'-4⅛"	6	12'-5"	8'-8"	0'-2¾"	14'-5"	10'-8"	0'-2¾"	4	22'-0"	2	4	20'-7"	2'-0"	2'-7¾"	2	4	24'-4"
Q	5	8'-10"	4'-11"	0'-4⅛"	10'-9"	6'-11"	0'-4⅛"	6	12'-11"	9'-2"	0'-2¾"	14'-11"	11'-2"	0'-2¾"	4	23'-0"	2	4	20'-7"	2'-0"	2'-7¾"	2	4	25'-5"
R	5	9'-4"	5'-5"	0'-4⅛"	11'-3"	7'-4"	0'-4⅛"	7	13'-5"	9'-8"	0'-2¾"	15'-6"	11'-9"	0'-2¾"	4	24'-0"	2	4	23'-2"	2'-1"	2'-7½"	2	4	26'-7"
S	5	10'-0"	6'-2"	0'-4⅛"	12'-0"	8'-1"	0'-4⅛"	7	14'-2"	10'-5"	0'-2¾"	16'-3"	12'-6"	0'-2¾"	4	25'-0"	2	4	23'-1"	2'-1"	2'-7½"	2	4	27'-8"
T	5	10'-4"	6'-1"	0'-4¼"	12'-3"	8'-0"	0'-4¼"	7	14'-11"	10'-8"	0'-2¾"	17'-0"	12'-9"	0'-2¾"	4	26'-0"	2	4	25'-8"	2'-0"	2'-7½"	2	4	28'-10"
U	6	10'-10"	6'-6"	0'-4¼"	12'-10"	8'-7"	0'-4¼"	8	15'-5"	11'-2"	0'-2¾"	17'-7"	13'-4"	0'-2¾"	4	27'-0"	2	4	25'-7"	2'-0"	2'-7⅜"	2	4	29'-11"
V	6	10'-10"	5'-10"	0'-4¼"	12'-10"	7'-10"	0'-4¼"	8	15'-11"	11'-2"	0'-2¾"	18'-1"	13'-5"	0'-2¾"	4	28'-0"	2	4	25'-7"	2'-0"	2'-7⅜"	2	4	31'-0"
W	6	11'-4"	6'-4"	0'-4¼"	13'-4"	8'-4"	0'-4¼"	9	16'-5"	11'-8"	0'-2¾"	18'-10"	14'-1"	0'-2¾"	4	29'-0"	2	4	28'-2"	2'-0"	2'-7⅜"	2	4	32'-2"
X	6	11'-5"	6'-2"	0'-4⅛"	13'-5"	8'-2"	0'-4⅛"	8	16'-11"	11'-9"	0'-2¾"	19'-1"	14'-0"	0'-2¾"	4	30'-6"	2	4	28'-7"	2'-0"	2'-7¾"	2	4	33'-9"
Y	6	11'-11"	6'-7"	0'-4⅛"	13'-11"	8'-8"	0'-4⅛"	8	17'-5"	12'-3"	0'-2¾"	19'-7"	14'-5"	0'-2¾"	4	31'-6"	2	4	31'-2"	2'-0"	2'-7¾"	2	4	34'-10"
Z	7	12'-5"	7'-1"	0'-4⅛"	14'-6"	9'-3"	0'-4⅛"	8	17'-11"	12'-9"	0'-2¾"	20'-1"	14'-11"	0'-2¾"	4	32'-6"	2	4	31'-1"	2'-1"	2'-7½"	2	4	35'-11"
AA	7	12'-10"	7'-7"	0'-4⅛"	15'-0"	9'-8"	0'-4⅛"	9	18'-5"	13'-3"	0'-2¾"	20'-10"	15'-8"	0'-2¾"	4	33'-6"	2	4	31'-1"	2'-1"	2'-7½"	2	4	37'-1"
BB	7	10'-1"	4'-5"	0'-4⅛"	12'-2"	6'-6"	0'-4⅛"	9	18'-11"	10'-5"	0'-2¾"	21'-4"	12'-10"	0'-2¾"	4	34'-6"	2	4	33'-8"	2'-0"	2'-7½"	2	4	38'-2"
CC	7	10'-7"	4'-10"	0'-4¼"	12'-8"	7'-0"	0'-4¼"	9	19'-5"	10'-11"	0'-2¾"	21'-10"	13'-4"	0'-2¾"	4	35'-6"	2	4	33'-7"	2'-1"	2'-7½"	2	4	39'-4"
DD	7	10'-4"	3'-11"	0'-4¼"	12'-5"	6'-0"	0'-4¼"	9	19'-11"	10'-8"	0'-2¾"	22'-4"	13'-2"	0'-2¾"	4	36'-6"	2	4	36'-2"	2'-0"	2'-7½"	2	4	40'-5"
EE	7	10'-11"	4'-7"	0'-4⅛"	13'-1"	6'-9"	0'-4⅛"	10	20'-5"	11'-3"	0'-2¾"	22'-10"	13'-9"	0'-2¾"	4	38'-0"	2	4	36'-7"	2'-0"	2'-7¾"	2	4	42'-0"

A COPY OF THE ORIGINAL SEALED AND SIGNED DRAWING IS ON FILE IN THE CENTRAL OFFICE

SPECIFICATION REFERENCE

WING DETAILS

1½: 1 FILL SLOPE - TYPE II

VIRGINIA DEPARTMENT OF TRANSPORTATION

VDOT

ROAD AND BRIDGE STANDARDS

REVISION DATE 07/12

SHEET 8 OF 8

1006.16

BCW-21

GENERAL NOTES

Specifications:

AASHTO LRFD Bridge Design Specifications 5th Edition 2010; 2011 Interim Revisions; and VDOT Modifications

Limits of validity for Standard Wingwall design

The standard wingwall designs are based on the following assumptions:

there is no structural connection between the wall and the box culvert
traffic surcharge loading is neglected.

Backfill

Backfill shall comprise granular material with an internal friction angle Φ' of at least 32°. Cohesive backfill shall not be permitted. Compaction of the backfill material within a distance of one-half the height of the wall shall be by hand compactors only.

Drainage

The Contractor shall provide the drainage system indicated on Sheet 1.

The cost for the drainage system (including porous backfill, 6" diameter non-rigid tubing and other items required) shall be incidental to the cost bid for Concrete.

Concrete

All concrete shall be Class A4.

Reinforcement

Deformed reinforcing bars shall conform to ASTM A615, Grade 60. All reinforcing bar dimensions on the detailed drawings are to centers of bars except where otherwise noted and are subject to fabrication and construction tolerances.

Dimensions on bar diagrams are out-to-out of bars. Bars are straight unless otherwise shown.

The concrete cover to the outermost reinforcement bars shall be as follows:

Wall footing (all faces) 3" minimum cover
Wall stem (all faces) 2½" minimum cover

At the Contractor's option WV Series bars may be spliced at top of the footing in order to facilitate construction. Splice lengths shall be in accordance with Table C on Sheet 1. No additional compensation shall be provided for the increase in reinforcing steel quantity due to the splices.

Miscellaneous

Weepholes shall be placed at the lowest point feasible for free drainage away from the wing.

Four Type I Wings are to be used for straight crossings and skews up to 20°. Two Type I and two Type II Wings are to be used for skews from 25° to 45°. For skews above 45°, special design wings are required. The wingwall to be used for each culvert is shown on the BC series sheets.

The designs shown are applicable for a 45° skew with the roadway and other conditions indicated. Any change in these conditions invalidates these designs.

Quantities shown are for one wing.

WING	Wall Quantities		qr_min ksf High End	qr_min ksf Low End
	Concrete CY	Reinforcement LB		
A	2.3	209	0.91	0.46
B	2.8	245	1.05	0.46
C	3.2	273	1.21	0.49
D	4.0	306	1.49	0.52
E	4.4	346	1.49	0.52
F	4.9	376	1.71	0.52
G	5.6	434	1.79	0.55
H	6.2	463	2.03	0.55
I	7.1	552	2.10	0.60
J	7.7	589	2.36	0.60
K	8.6	672	2.43	0.65
L	9.3	738	2.70	0.65
M	10.3	870	2.76	0.71
N	10.7	950	3.05	0.85
O	11.7	1014	3.10	0.85
P	13.2	1172	3.17	0.88
Q	14.0	1337	3.45	0.88
R	15.3	1444	3.51	0.95
S	16.5	1591	3.58	0.95
T	17.5	1695	3.86	1.03
U	18.8	2002	3.92	1.03
V	20.3	2238	3.99	1.11
W	21.7	2403	4.07	1.11
X	27.0	2884	4.28	1.27
Y	31.7	3334	4.36	1.30
Z	33.9	3578	4.46	1.39
AA	35.9	3876	4.56	1.39
BB	38.8	4522	4.56	1.48
CC	41.0	4747	4.66	1.48
DD	50.0	5689	4.99	1.71
EE	52.6	6313	5.10	1.71

A COPY OF THE ORIGINAL SEALED AND SIGNED DRAWING IS ON FILE IN THE CENTRAL OFFICE

VDOT
ROAD AND BRIDGE STANDARDS

SHEET 1 OF 8 | REVISION DATE
1007.01 | 07/12

WING DETAIL

2:1 FILL SLOPE - TYPE I

VIRGINIA DEPARTMENT OF TRANSPORTATION

SPECIFICATION REFERENCE

BCW-21

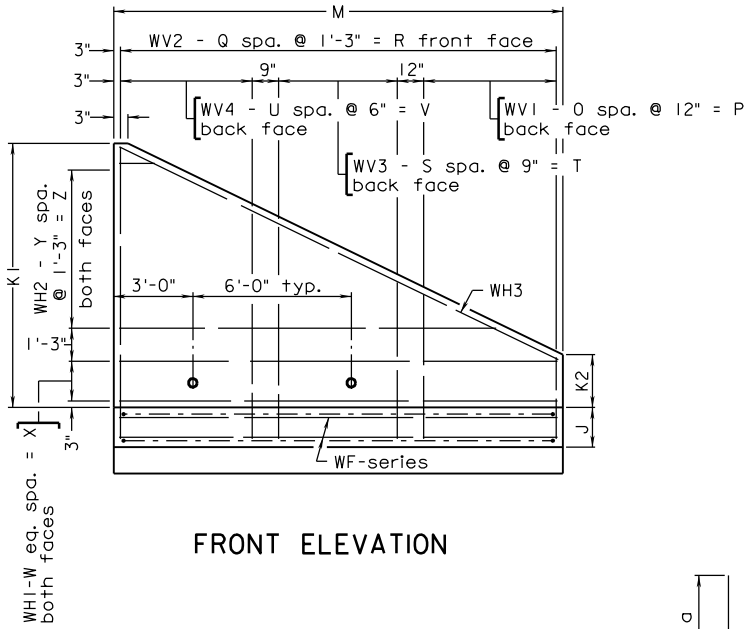

FRONT ELEVATION

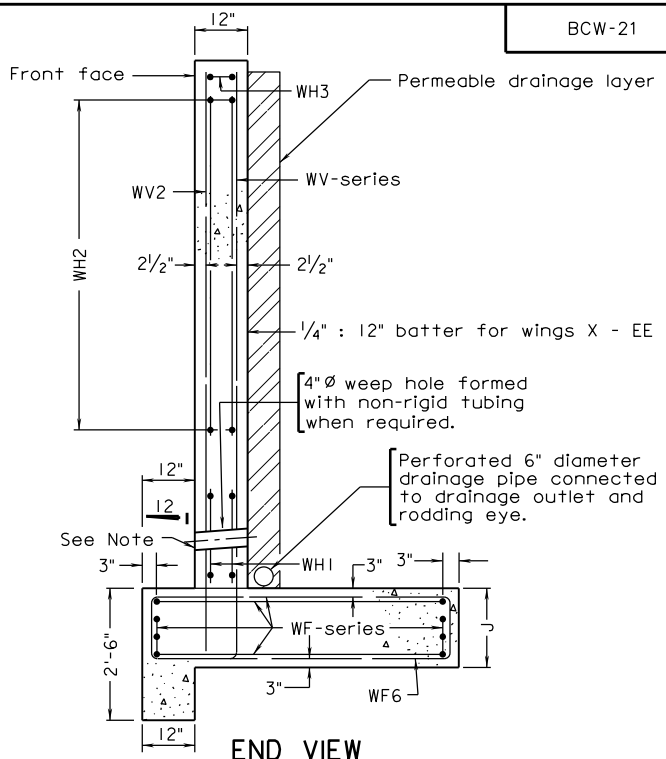

END VIEW

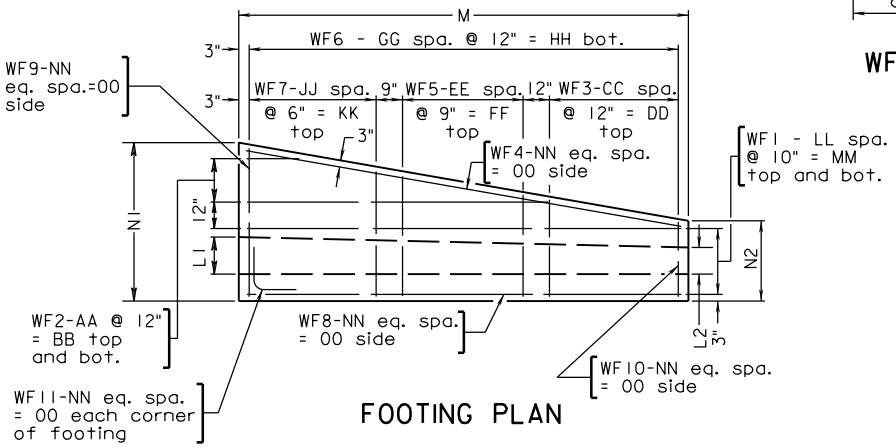

FOOTING PLAN

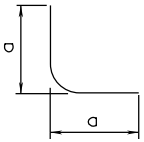

WF11

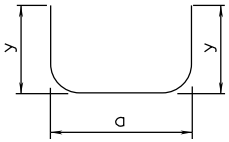

WF1 TO WF3, WF5 TO WF7

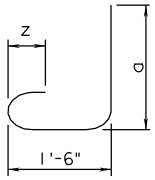

WV1, WV3, WV4

TABLE A	
Wall	y
A-W	9½"
X	1'-0½"
Y-CC	1'-3½"
DD-EE	1'-9½"

TABLE B		
Bar Size	Pin Dia.	Z
#3	2¼"	4"
#4	3"	4½"
#5	3¾"	5"
#6	4½"	6"
#7	5¼"	7"
#8	6"	8"
#9	9"	10⅛"

TABLE C	
Bar Size	Splice Length
#4	1'- 9"
#5	2'- 4"
#6	2'- 7"
#7	3'- 3"
#8	4'- 2"
#9	5'- 4"

A COPY OF THE ORIGINAL SEALED AND SIGNED DRAWING AND DESIGN STATEMENT IS ON FILE IN THE CENTRAL OFFICE.

SPECIFICATION REFERENCE

WING DETAIL

2:1 FILL SLOPE - TYPE I

VIRGINIA DEPARTMENT OF TRANSPORTATION

VDOT
ROAD AND BRIDGE STANDARDS

REVISION DATE 07/16

SHEET 2 OF 8

1007.02

BCW-21

WING	WALL DIMENSIONS								No. WEEP HOLES	FOOTING BAR SPACINGS													
	J	K1	K2	L1	L2	M	N1	N2		WF1		WF2		WF3		WF4, WF8 to WF10		WF5		WF6		WF7	
										LL	MM	AA	BB	CC	DD	NN	OO	EE	FF	GG	HH	JJ	KK
A	1'-6"	4'-0"	1'-6"	1'-0"	1'-0"	7'-0"	4'-0"	3'-0"	-	3	2'-6"	-	-	6	6'-0"	1	0'-8"	-	-	6	6'-0"	-	-
B	1'-6"	4'-6"	1'-6"	1'-0"	1'-0"	8'-0"	4'-0"	3'-0"	-	3	2'-6"	-	-	7	7'-0"	1	0'-8"	-	-	7	7'-0"	-	-
C	1'-6"	5'-0"	1'-9"	1'-0"	1'-0"	9'-0"	4'-0"	3'-0"	-	3	2'-6"	-	-	8	8'-0"	1	0'-8"	-	-	8	8'-0"	-	-
D	1'-6"	5'-6"	2'-0"	1'-0"	1'-0"	10'-0"	4'-6"	3'-0"	-	3	2'-6"	-	-	9	9'-0"	1	0'-8"	-	-	9	9'-0"	-	-
E	1'-6"	6'-0"	2'-0"	1'-0"	1'-0"	11'-0"	4'-6"	3'-0"	-	3	2'-6"	-	-	10	10'-0"	1	0'-8"	-	-	10	10'-0"	-	-
F	1'-6"	6'-6"	2'-0"	1'-0"	1'-0"	12'-0"	4'-6"	3'-0"	-	3	2'-6"	-	-	11	11'-0"	1	0'-8"	-	-	11	11'-0"	-	-
G	1'-6"	7'-0"	2'-3"	1'-0"	1'-0"	13'-0"	5'-0"	3'-0"	-	3	2'-6"	-	-	12	12'-0"	1	0'-8"	-	-	12	12'-0"	-	-
H	1'-6"	7'-6"	2'-3"	1'-0"	1'-0"	14'-0"	5'-0"	3'-0"	-	3	2'-6"	-	-	13	13'-0"	1	0'-8"	-	-	13	13'-0"	-	-
I	1'-6"	8'-0"	2'-6"	1'-0"	1'-0"	15'-0"	5'-6"	3'-0"	-	3	2'-6"	1	1'-0"	9	9'-0"	1	0'-8"	6	4'-6"	14	14'-0"	-	-
J	1'-6"	8'-6"	2'-6"	1'-0"	1'-0"	16'-0"	5'-6"	3'-0"	-	3	2'-6"	1	1'-0"	9	9'-0"	1	0'-8"	7	5'-3"	15	15'-0"	-	-
K	1'-6"	9'-0"	2'-9"	1'-0"	1'-0"	17'-0"	6'-0"	3'-0"	-	3	2'-6"	1	1'-0"	10	10'-0"	1	0'-8"	7	5'-3"	16	16'-0"	-	-
L	1'-6"	9'-6"	2'-9"	1'-0"	1'-0"	18'-0"	6'-0"	3'-0"	-	3	2'-6"	1	1'-0"	10	10'-0"	1	0'-8"	8	6'-0"	17	17'-0"	-	-
M	1'-6"	10'-0"	3'-0"	1'-0"	1'-0"	19'-0"	6'-6"	3'-0"	-	3	2'-6"	2	2'-0"	11	11'-0"	1	0'-8"	8	6'-0"	18	18'-0"	-	-
N	1'-6"	10'-6"	3'-6"	1'-0"	1'-0"	19'-0"	6'-6"	3'-0"	-	3	2'-6"	2	2'-0"	11	11'-0"	1	0'-8"	8	6'-0"	18	18'-0"	-	-
O	1'-6"	11'-0"	3'-6"	1'-0"	1'-0"	20'-0"	7'-0"	3'-0"	1	3	2'-6"	2	2'-0"	12	12'-0"	1	0'-8"	8	6'-0"	19	19'-0"	-	-
P	1'-6"	11'-6"	3'-9"	1'-0"	1'-0"	21'-0"	7'-6"	3'-6"	1	3	2'-6"	3	3'-0"	12	12'-0"	1	0'-8"	10	7'-6"	20	20'-0"	-	-
Q	1'-6"	12'-0"	3'-9"	1'-0"	1'-0"	22'-0"	7'-6"	3'-6"	1	3	2'-6"	3	3'-0"	13	13'-0"	1	0'-8"	10	7'-6"	21	21'-0"	-	-
R	1'-6"	12'-6"	4'-0"	1'-0"	1'-0"	23'-0"	8'-0"	3'-6"	1	3	2'-6"	3	3'-0"	10	10'-0"	1	0'-8"	9	6'-9"	22	22'-0"	8	4'-0"
S	1'-6"	13'-0"	4'-0"	1'-0"	1'-0"	24'-0"	8'-6"	3'-6"	1	3	2'-6"	4	4'-0"	11	11'-0"	1	0'-8"	9	6'-9"	23	23'-0"	8	4'-0"
T	1'-6"	13'-6"	4'-3"	1'-0"	1'-0"	25'-0"	8'-6"	3'-6"	2	3	2'-6"	4	4'-0"	12	12'-0"	1	0'-8"	9	6'-9"	24	24'-0"	8	4'-0"
U	1'-6"	14'-0"	4'-3"	1'-0"	1'-0"	26'-0"	9'-0"	3'-6"	2	3	2'-6"	4	4'-0"	12	12'-0"	1	0'-8"	9	6'-9"	25	25'-0"	10	5'-0"
V	1'-6"	14'-6"	4'-6"	1'-0"	1'-0"	27'-0"	9'-6"	3'-6"	2	3	2'-6"	5	5'-0"	10	10'-0"	1	0'-8"	13	9'-9"	26	26'-0"	10	5'-0"
W	1'-6"	15'-0"	4'-6"	1'-0"	1'-0"	28'-0"	10'-0"	3'-6"	2	3	2'-6"	5	5'-0"	11	11'-0"	1	0'-8"	13	9'-9"	27	27'-0"	10	5'-0"
X	1'-9"	15'-6"	4'-9"	1'-3¾"	1'-1⅛"	29'-0"	11'-0"	4'-0"	2	4	3'-4"	5	5'-0"	11	11'-0"	1	0'-11"	13	9'-9"	28	28'-0"	12	6'-0"
Y	2'-0"	16'-0"	4'-9"	1'-4"	1'-1⅛"	30'-0"	12'-0"	4'-6"	3	4	3'-4"	6	6'-0"	10	10'-0"	2	0'-7"	17	12'-9"	29	29'-0"	10	5'-0"
Z	2'-0"	16'-6"	5'-0"	1'-4⅛"	1'-1¼"	31'-0"	12'-6"	4'-6"	3	4	3'-4"	7	7'-0"	10	10'-0"	2	0'-7"	17	12'-9"	30	30'-0"	12	6'-0"
AA	2'-0"	17'-0"	5'-0"	1'-4¼"	1'-1¼"	32'-0"	13'-0"	4'-6"	3	4	3'-4"	7	7'-0"	11	11'-0"	2	0'-7"	17	12'-9"	31	31'-0"	12	6'-0"
BB	2'-0"	17'-6"	5'-3"	1'-4⅜"	1'-1¼"	33'-0"	14'-0"	4'-6"	3	4	3'-4"	8	8'-0"	12	12'-0"	2	0'-7"	17	12'-9"	32	32'-0"	12	6'-0"
CC	2'-0"	18'-0"	5'-3"	1'-4½"	1'-1¼"	34'-0"	14'-6"	4'-6"	3	4	3'-4"	9	9'-0"	13	13'-0"	2	0'-7"	17	12'-9"	33	33'-0"	12	6'-0"
DD	2'-6"	18'-6"	5'-6"	1'-4⅝"	1'-1⅜"	35'-0"	15'-0"	5'-0"	4	5	4'-2"	8	8'-0"	12	12'-0"	2	0'-10"	17	12'-9"	34	34'-0"	16	8'-0"
EE	2'-6"	19'-0"	5'-6"	1'-4¾"	1'-1⅜"	36'-0"	15'-6"	5'-0"	4	5	4'-2"	9	9'-0"	12	12'-0"	2	0'-10"	17	12'-9"	35	35'-0"	18	9'-0"

A COPY OF THE ORIGINAL SEALED AND SIGNED DRAWING IS ON FILE IN THE CENTRAL OFFICE

VDOT
ROAD AND BRIDGE STANDARDS

SHEET 3 OF 8 | REVISION DATE
1007.03 | 07/12

WING DETAILS

2:1 FILL SLOPE -TYPE I

VIRGINIA DEPARTMENT OF TRANSPORTATION

SPECIFICATION REFERENCE

WING	WF1				WF2								WF3						
	SIZE	a	LENGTH	* Ea	SIZE	a			LENGTH			* Ea	SIZE	a			LENGTH		
						FROM	TO	VARY BY	FROM	TO	VARY BY			FROM	TO	VARY BY	FROM	TO	VARY BY
A	4	6'-5"	7'-9"	2	4	1'-2"	8'-2"	-	2'-6"	9'-6"	-	2	4	3'-5"	2'-6"	0'-1¾"	4'-9"	3'-11"	0'-1¾"
B	4	7'-5"	8'-9"	2	4	1'-5"	9'-5"	-	2'-9"	10'-9"	-	2	4	3'-5"	2'-6"	0'-1½"	4'-9"	3'-11"	0'-1½"
C	4	8'-5"	9'-9"	2	4	1'-8"	10'-8"	-	3'-0"	12'-0"	-	2	4	3'-5"	2'-6"	0'-1⅓"	4'-9"	3'-11"	0'-1⅓"
D	4	9'-5"	10'-9"	2	4	4'-5"	4'-5"	-	5'-9"	5'-9"	-	2	4	3'-11"	2'-6"	0'-1¾"	5'-3"	3'-11"	0'-1¾"
E	4	10'-5"	11'-9"	2	4	4'-11"	4'-11"	-	6'-3"	6'-3"	-	2	4	3'-11"	2'-6"	0'-1⅝"	5'-3"	3'-11"	0'-1⅝"
F	4	11'-5"	12'-9"	2	4	5'-5"	5'-5"	-	6'-9"	6'-9"	-	2	4	3'-11"	2'-6"	0'-1½"	5'-3"	3'-11"	0'-1½"
G	4	12'-5"	13'-9"	2	4	7'-6"	7'-6"	-	8'-11"	8'-11"	-	2	4	4'-5"	2'-6"	0'-1¾"	5'-9"	3'-11"	0'-1¾"
H	4	13'-5"	14'-9"	2	4	8'-2"	8'-2"	-	9'-6"	9'-6"	-	2	4	4'-5"	2'-6"	0'-1¾"	5'-9"	3'-11"	0'-1¾"
I	4	14'-5"	15'-9"	2	4	9'-11"	3'-11"	6'-0"	11'-3"	5'-3"	6'-0"	2	4	4'-0"	2'-6"	0'-2"	5'-4"	3'-10"	0'-2"
J	4	15'-5"	16'-9"	2	4	10'-7"	4'-2"	6'-4⅞"	11'-11"	5'-7"	6'-4⅞""	2	4	3'-11"	2'-6"	0'-1⅞"	5'-3"	3'-10"	0'-1⅞"
K	4	16'-5"	17'-9"	2	4	12'-2"	6'-6"	5'-8"	13'-6"	7'-10"	5'-8"	2	4	4'-3"	2'-6"	0'-2¼"	5'-8"	3'-11"	0'-2¼"
L	4	17'-5"	18'-9"	2	4	12'-11"	6'-11"	6'-0"	14'-3"	8'-3"	6'-0"	2	4	4'-3"	2'-7"	0'-2"	5'-7"	3'-11"	0'-2"
M	4	18'-5"	19'-9"	2	4	14'-4"	3'-5"	5'-5⅛"	15'-8"	4'-10"	5'-5⅛"	2	4	4'-7"	2'-7"	0'-2⅛"	5'-11"	3'-11"	0'-2⅛"
N	4	18'-5"	19'-9"	2	4	14'-4"	3'-5"	5'-5⅛"	15'-8"	4'-10"	5'-5⅛"	2	4	4'-7"	2'-7"	0'-2⅛"	5'-11"	3'-11"	0'-2⅛"
O	4	19'-5"	20'-9"	2	4	15'-8"	5'-8"	5'-0"	17'-0"	7'-0"	5'-0"	2	4	5'-0"	2'-7"	0'-2⅜"	6'-4"	3'-11"	0'-2⅜"
P	4	20'-5"	21'-9"	2	4	19'-1"	3'-4"	5'-3"	20'-5"	4'-8"	5'-3"	2	4	5'-3"	3'-0"	0'-2⅜"	6'-8"	4'-4"	0'-2⅜"
Q	4	21'-5"	22'-9"	2	4	20'-0"	3'-6"	5'-6"	21'-5"	4'-11"	5'-6"	2	4	5'-4"	3'-0"	0'-2⅛"	6'-8"	4'-4"	0'-2⅛"
R	4	22'-5"	23'-9"	2	4	21'-1"	5'-9"	5'-1⅓"	22'-6"	7'-2"	5'-1⅓"	2	4	4'-11"	3'-0"	0'-2½"	6'-4"	4'-4"	0'-2½"
S	4	23'-5"	24'-9"	2	4	22'-2"	3'-0"	4'-9½"	23'-7"	4'-4"	4'-9½"	2	4	5'-4"	3'-0"	0'-2⅜"	6'-8"	4'-4"	0'-2⅜"
T	4	24'-5"	25'-9"	2	4	23'-2"	3'-2"	5'-0"	24'-6"	4'-6"	5'-0"	2	4	5'-4"	3'-0"	0'-2½"	6'-9"	4'-4"	0'-2½"
U	4	25'-5"	26'-9"	2	4	24'-2"	5'-3"	4'-8¾"	25'-7"	6'-8"	4'-8¾"	2	4	5'-6"	3'-0"	0'-2⅝"	6'-11"	4'-4"	0'-2⅝"
V	4	26'-5"	27'-9"	2	4	25'-3"	2'-9"	4'-6"	26'-8"	4'-2"	4'-6"	2	4	5'-2"	3'-0"	0'-2¾"	6'-7"	4'-4"	0'-2¾"
W	4	27'-5"	28'-9"	2	4	26'-4"	4'-9"	4'-3¾"	27'-8"	6'-2"	4'-3¾"	2	4	5'-6"	3'-0"	0'-2⅞"	6'-11"	4'-4"	0'-2⅞"
X	4	28'-5"	30'-3"	2	5	26'-0"	5'-3"	4'-1¾"	27'-9"	7'-1"	4'-1¾"	2	5	6'-2"	3'-6"	0'-3"	8'-0"	5'-4"	0'-3"
Y	4	29'-5"	31'-9"	2	5	29'-1"	5'-1"	4'-0"	31'-4"	4'-8"	4'-0"	2	5	6'-6"	4'-0"	0'-3"	8'-10"	6'-4"	0'-3"
Z	4	30'-5"	32'-9"	2	5	30'-1"	2'-11"	3'-10½"	32'-5"	5'-3"	3'-10½"	2	5	6'-7"	4'-0"	0'-3⅛"	8'-11"	6'-4"	0'-3⅛"
AA	4	31'-5"	33'-9"	2	5	31'-1"	4'-9"	3'-9⅛"	33'-5"	7'-0"	3'-9⅛"	2	5	6'-11"	4'-0"	0'-3½"	9'-3"	6'-4"	0'-3½"
BB	4	32'-5"	34'-9"	2	5	32'-1"	4'-4"	3'-5⅝"	34'-5"	6'-7"	3'-5⅝"	2	5	7'-5"	4'-0"	0'-3½"	9'-9"	6'-4"	0'-3½"
CC	4	33'-5"	35'-9"	2	5	33'-1"	2'-6"	3'-4¾"	35'-5"	4'-10"	3'-4¾"	2	5	7'-10"	4'-0"	0'-3½"	10'-2"	6'-4"	0'-3½"
DD	5	34'-5"	37'-8"	2	5	32'-11"	4'-11"	3'-6"	36'-3"	8'-3"	3'-6"	2	5	7'-11"	4'-6"	0'-3½"	11'-3"	7'-10"	0'-3½"
EE	5	35'-5"	38'-8"	2	5	33'-11"	3'-1"	3'-5⅛"	37'-3"	6'-5"	3'-5⅛"	2	5	8'-0"	4'-6"	0'-3½"	11'-4"	7'-10"	0'-3½"

A COPY OF THE ORIGINAL SEALED AND SIGNED DRAWING IS ON FILE IN THE CENTRAL OFFICE

SPECIFICATION REFERENCE

WING DETAILS

2:1 FILL SLOPE -TYPE I

VIRGINIA DEPARTMENT OF TRANSPORTATION

VDOT

ROAD AND BRIDGE STANDARDS

REVISION DATE	SHEET 4 OF 8
07/12	1007.04

BCW-21

WING	WF4		WF5							WF6						
	SIZE	LENGTH	SIZE	a			LENGTH			SIZE	a			LENGTH		
				FROM	TO	VARY BY	FROM	TO	VARY BY		FROM	TO	VARY BY	FROM	TO	VARY BY
A	4	6'-2"	-	-	-	-	-	-	-	4	3'-4"	2'-6"	0'- 1⅝"	4'-9"	3'-10"	0'- 1⅝"
B	4	7'-2"	-	-	-	-	-	-	-	4	3'-4"	2'-6"	0'- 1½"	4'-9"	3'-10"	0'- 1½"
C	4	8'-2"	-	-	-	-	-	-	-	4	3'-4"	2'-6"	0'- 1⅓"	4'-9"	3'-10"	0'- 1⅓"
D	4	9'-3"	-	-	-	-	-	-	-	4	3'-10"	2'-6"	0'- 1¾"	5'-3"	3'-10"	0'- 1¾"
E	4	10'-3"	-	-	-	-	-	-	-	4	3'-10"	2'-6"	0'- 1⅝"	5'-3"	3'-10"	0'- 1⅝"
F	4	11'-3"	-	-	-	-	-	-	-	4	3'-10"	2'-6"	0'- 1½"	5'-3"	3'-10"	0'- 1½"
G	4	12'-3"	-	-	-	-	-	-	-	4	4'-4"	2'-6"	0'- 1¾"	5'-9"	3'-10"	0'- 1¾"
H	4	13'-3"	-	-	-	-	-	-	-	4	4'-4"	2'-6"	0'- 1⅝"	5'-9"	3'-10"	0'- 1⅝"
I	4	14'-4"	4	4'-11"	4'-2"	0'- 1½"	6'-3"	5'-6"	0'- 1½"	4	4'-10"	2'-6"	0'- 2"	6'-3"	3'-11"	0'- 2"
J	4	15'-4"	4	4'-11"	4'-1"	0'- 1⅜"	6'-3"	5'-5"	0'- 1⅜"	4	4'-10"	2'-6"	0'- 1⅞"	6'-3"	3'-10"	0'- 1⅞"
K	4	16'-5"	4	5'-5"	4'-5"	0'- 1½"	6'-9"	5'-10"	0'- 1½"	4	5'-4"	2'-6"	0'- 2"	6'-9"	3'-11"	0'- 2"
L	4	17'-5"	4	5'-5"	4'-5"	0'- 1½"	6'-9"	5'-9"	0'- 1½"	4	5'-4"	2'-6"	0'- 2"	6'-9"	3'-11"	0'- 2"
M	4	18'-5"	5	5'-11"	4'-9"	0'- 1⅝"	7'-2"	6'-1"	0'- 1⅝"	4	5'-10"	2'-6"	0'- 2⅛"	7'-2"	3'-11"	0'- 2⅛"
N	4	18'-5"	5	5'-11"	4'-9"	0'- 1⅝"	7'-2"	6'-1"	0'- 1⅝"	4	5'-10"	2'-6"	0'- 2⅛"	7'-2"	3'-11"	0'- 2⅛"
O	4	19'-6"	5	6'-4"	5'-2"	0'- 1¾"	7'-8"	6'-6"	0'- 1¾"	4	6'-4"	2'-6"	0'- 2⅜"	7'-8"	3'-11"	0'- 2⅜"
P	4	20'-6"	6	6'-11"	5'-5"	0'- 1⅝"	8'-2"	6'-9"	0'- 1⅝"	4	6'-10"	3'-0"	0'- 2¼"	8'-2"	4'-5"	0'- 2¼"
Q	4	21'-6"	6	6'-11"	5'-6"	0'- 1⅝"	8'-2"	6'-9"	0'- 1⅝"	4	6'-10"	3'-0"	0'- 2⅛"	8'-2"	4'-5"	0'- 2⅛"
R	4	22'-7"	5	6'-5"	5'-1"	0'- 1¾"	7'-9"	6'-5"	0'- 1¾"	4	7'-4"	3'-0"	0'- 2¼"	8'-8"	4'-5"	0'- 2¼"
S	4	23'-7"	5	6'-11"	5'-6"	0'- 1⅞"	8'-2"	6'-10"	0'- 1⅞"	4	7'-10"	3'-0"	0'- 2½"	9'-2"	4'-5"	0'- 2½"
T	4	24'-7"	6	6'-11"	5'-7"	0'- 1⅝"	8'-2"	6'-10"	0'- 1⅝"	4	7'-10"	3'-0"	0'- 2⅜"	9'-2"	4'-5"	0'- 2⅜"
U	4	25'-9"	6	7'-2"	5'-9"	0'- 1⅞"	8'-5"	7'-0"	0'- 1⅞"	4	8'-4"	3'-0"	0'- 2½"	9'-8"	4'-5"	0'- 2½"
V	4	26'-10"	6	7'-7"	5'-5"	0'- 2"	8'-10"	6'-8"	0'- 2"	4	8'-10"	3'-1"	0'- 2⅝"	10'-2"	4'-5"	0'- 2⅝"
W	4	27'-11"	7	8'-0"	5'-9"	0'- 2"	9'-3"	7'-0"	0'- 2"	4	9'-4"	3'-1"	0'- 2¾"	10'-8"	4'-5"	0'- 2¾"
X	4	29'-0"	6	8'-9"	6'-4"	0'- 2⅛"	10'-6"	8'-2"	0'- 2⅛"	5	10'-4"	3'-7"	0'- 2⅞"	12'-2"	5'-5"	0'- 2⅞"
Y	4	30'-1"	6	9'-11"	6'-9"	0'- 1¼"	12'-2"	9'-0"	0'- 1¼"	5	11'-4"	4'-1"	0'- 3"	13'-8"	6'-5"	0'- 3"
Z	4	31'-2"	6	10'-1"	6'-10"	0'- 2⅓"	12'-5"	9'-1"	0'- 2⅓"	5	11'-10"	4'-1"	0'- 3"	14'-2"	6'-5"	0'- 3"
AA	4	32'-3"	7	10'-7"	7'-2"	0'- 2⅜"	12'-9"	9'-5"	0'- 2⅜"	5	12'-4"	4'-1"	0'- 3⅛"	14'-8"	6'-5"	0'- 3⅛"
BB	4	33'-6"	7	11'-5"	7'-9"	0'- 2½"	13'-7"	9'-11"	0'- 2½"	5	13'-4"	4'-1"	0'- 3⅜"	15'-8"	6'-5"	0'- 3⅜"
CC	4	34'-7"	7	11'-10"	8'-1"	0'- 2⅝"	14'-1"	10'-4"	0'- 2⅝"	5	13'-10"	4'-1"	0'- 3½"	16'-2"	6'-5"	0'- 3½"
DD	5	35'-7"	7	11'-10"	8'-2"	0'- 2½"	15'-1"	11'-5"	0'- 2½"	5	14'-4"	4'-7"	0'- 3⅜"	17'-8"	7'-11"	0'- 3⅜"
EE	5	36'-8"	7	12'-0"	8'-3"	0'- 2⅝"	15'-3"	11'-6"	0'- 2⅝"	5	14'-10"	4'-7"	0'- 3½"	18'-2"	7'-11"	0'- 3½"

A COPY OF THE ORIGINAL SEALED AND SIGNED DRAWING IS ON FILE IN THE CENTRAL OFFICE

VDOT
ROAD AND BRIDGE STANDARDS

SHEET 5 OF 8 | REVISION DATE
1007.05 | 07/12

WING DETAILS

2:1 FILL SLOPE - TYPE I

VIRGINIA DEPARTMENT OF TRANSPORTATION

SPECIFICATION REFERENCE

BCW-21

WING	WF7							WF8		WF9		WF10		WF11			
	SIZE	a			LENGTH			SIZE	LENGTH	SIZE	LENGTH	SIZE	LENGTH	SIZE	a	LENGTH	* Ea
		FROM	TO	VARY BY	FROM	TO	VARY BY										
A	-	-	-	-	-	-	-	4	6'-2"	4	3'-2"	4	2'-2"	4	2'-2"	4'-2"	4
B	-	-	-	-	-	-	-	4	7'-2"	4	3'-2"	4	2'-2"	4	2'-2"	4'-2"	4
C	-	-	-	-	-	-	-	4	8'-2"	4	3'-2"	4	2'-2"	4	2'-2"	4'-2"	4
D	-	-	-	-	-	-	-	4	9'-2"	4	3'-8"	4	2'-2"	4	2'-2"	4'-2"	4
E	-	-	-	-	-	-	-	4	10'-2"	4	3'-8"	4	2'-2"	4	2'-2"	4'-2"	4
F	-	-	-	-	-	-	-	4	11'-2"	4	3'-8"	4	2'-2"	4	2'-2"	4'-2"	4
G	-	-	-	-	-	-	-	4	12'-2"	4	4'-2"	4	2'-2"	4	2'-2"	4'-2"	4
H	-	-	-	-	-	-	-	4	13'-2"	4	4'-2"	4	2'-2"	4	2'-2"	4'-2"	4
I	-	-	-	-	-	-	-	4	14'-2"	4	4'-8"	4	2'-2"	4	2'-2"	4'-2"	4
J	-	-	-	-	-	-	-	4	15'-2"	4	4'-8"	4	2'-2"	4	2'-2"	4'-2"	4
K	-	-	-	-	-	-	-	4	16'-2"	4	5'-2"	4	2'-2"	4	2'-2"	4'-2"	4
L	-	-	-	-	-	-	-	4	17'-2"	4	5'-2"	4	2'-2"	4	2'-2"	4'-2"	4
M	-	-	-	-	-	-	-	4	18'-2"	4	5'-8"	4	2'-2"	4	2'-2"	4'-2"	4
N	-	-	-	-	-	-	-	4	18'-2"	4	5'-8"	4	2'-2"	4	2'-2"	4'-2"	4
O	-	-	-	-	-	-	-	4	19'-2"	4	6'-2"	4	2'-2"	4	2'-2"	4'-2"	4
P	-	-	-	-	-	-	-	4	20'-2"	4	6'-8"	4	2'-8"	4	2'-2"	4'-2"	4
Q	-	-	-	-	-	-	-	4	21'-2"	4	6'-8"	4	2'-8"	4	2'-2"	4'-2"	4
R	5	7'-4"	6'-7"	0'-1⅛"	8'-8"	7'-11"	0'-1⅛"	4	22'-2"	4	7'-2"	4	2'-8"	4	2'-2"	4'-2"	4
S	6	7'-10"	7'-0"	0'-1¼"	9'-2"	8'-4"	0'-1¼"	4	23'-2"	4	7'-8"	4	2'-8"	4	2'-2"	4'-2"	4
T	6	7'-10"	7'-1"	0'-1⅛"	9'-2"	8'-4"	0'-1⅛"	4	24'-2"	4	7'-8"	4	2'-8"	4	2'-2"	4'-2"	4
U	6	8'-4"	7'-4"	0'-1¼"	9'-8"	8'-7"	0'-1¼"	4	25'-2"	4	8'-2"	4	2'-8"	4	2'-2"	4'-2"	4
V	6	8'-10"	7'-9"	0'-1⅓"	10'-2"	9'-0"	0'-1⅓"	4	26'-2"	4	8'-8"	4	2'-8"	4	2'-2"	4'-2"	4
W	6	9'-4"	8'-2"	0'-1⅜"	10'-8"	9'-6"	0'-1⅜"	4	27'-2"	4	9'-2"	4	2'-8"	4	2'-2"	4'-2"	4
X	6	10'-4"	8'-11"	0'-1⅜"	12'-2"	10'-8"	0'-1⅜"	4	28'-2"	4	10'-2"	4	3'-2"	4	2'-2"	4'-2"	4
Y	7	11'-4"	10'-1"	0'-1½"	13'-7"	12'-4"	0'-1½"	4	29'-2"	4	11'-2"	4	3'-8"	4	2'-2"	4'-2"	4
Z	7	11'-10"	10'-4"	0'-1½"	14'-1"	12'-6"	0'-1½"	4	30'-2"	4	11'-8"	4	3'-8"	4	2'-2"	4'-2"	4
AA	7	12'-4"	10'-9"	0'-1½"	14'-7"	13'-0"	0'-1½"	4	31'-2"	4	12'-2"	4	3'-8"	4	2'-2"	4'-2"	4
BB	7	13'-4"	11'-7"	0'-1⅝"	15'-7"	13'-10"	0'-1⅝"	4	32'-2"	4	13'-2"	4	3'-8"	4	2'-2"	4'-2"	4
CC	7	13'-10"	12'-1"	0'-1¾"	16'-1"	14'-4"	0'-1¾"	4	33'-2"	4	13'-8"	4	3'-8"	4	2'-2"	4'-2"	4
DD	7	14'-4"	12'-1"	0'-1⅝"	17'-7"	15'-3"	0'-1⅝"	5	34'-2"	5	14'-2"	5	4'-2"	5	2'-9"	5'-4"	4
EE	7	14'-10"	12'-3"	0'-1¾"	18'-1"	15'-5"	0'-1¾"	5	35'-2"	5	14'-8"	5	4'-2"	5	2'-9"	5'-4"	4

A COPY OF THE ORIGINAL SEALED AND SIGNED DRAWING IS ON FILE IN THE CENTRAL OFFICE

SPECIFICATION REFERENCE

WING DETAILS

2:1 FILL SLOPE - TYPE I

VIRGINIA DEPARTMENT OF TRANSPORTATION

VDOT

ROAD AND BRIDGE STANDARDS

REVISION DATE 07/12

SHEET 6 OF 8

1007.06

BCW-21

WING	STEM BAR SPACINGS												WV1							WV2			
	WV1		WV2		WV3		WV4		WH1		WH2		SIZE	a			LENGTH			SIZE	LENGTH		
	O	P	Q	R	S	T	U	V	W	X	Y	Z		FROM	TO	VARY BY	FROM	TO	VARY BY		FROM	TO	VARY BY
A	6	6'-0"	5	6'-3"	-	-	-	-	-	-	1	1'-3"	4	4'-11"	2'-9"	0'-4⅓"	6'-10"	4'-8"	0'-4⅓"	4	4'-11"	2'-8"	0'-5⅜"
B	7	7'-0"	6	7'-6"	-	-	-	-	1	0'-6"	1	1'-3"	4	5'-5"	2'-9"	0'-4½"	7'-4"	4'-8"	0'-4½"	4	5'-5"	2'-7"	0'-5⅝"
C	8	8'-0"	6	7'-6"	-	-	-	-	1	1'-0"	1	1'-3"	4	5'-11"	3'-0"	0'-4⅜"	7'-10"	4'-11"	0'-4⅜"	4	5'-11"	3'-2"	0'-5⅜"
D	9	9'-0"	7	8'-9"	-	-	-	-	-	-	2	2'-6"	4	6'-11"	3'-3"	0'-4⅝"	8'-10"	5'-2"	0'-4⅝"	4	6'-11"	3'-5"	0'-6"
E	10	10'-0"	8	10'-0"	-	-	-	-	1	0'-9"	2	2'-6"	4	6'-11"	3'-3"	0'-4⅜"	8'-10"	5'-2"	0'-4⅜"	4	6'-11"	3'-3"	0'-5⅜"
F	11	11'-0"	9	11'-3"	-	-	-	-	1	1'-3"	2	2'-6"	4	7'-5"	3'-3"	0'-4½"	9'-4"	5'-2"	0'-4½"	4	7'-5"	3'-2"	0'-5⅝"
G	12	12'-0"	10	12'-6"	-	-	-	-	2	1'-9"	2	2'-6"	4	7'-11"	3'-6"	0'-4⅜"	9'-10"	5'-5"	0'-4⅜"	4	7'-11"	3'-4"	0'-5½"
H	13	13'-0"	10	12'-6"	-	-	-	-	1	1'-0"	3	3'-9"	4	8'-5"	3'-6"	0'-4½"	10'-4"	5'-5"	0'-4½"	4	8'-5"	3'-8"	0'-5⅝"
I	9	9'-0"	11	13'-9"	6	4'-6"	-	-	2	1'-6"	3	3'-9"	4	6'-11"	3'-7"	0'-4⅜"	8'-9"	5'-6"	0'-4⅜"	4	8'-11"	3'-10"	0'-5½"
J	9	9'-0"	12	15'-0"	7	5'-3"	-	-	2	2'-0"	3	3'-9"	4	7'-1"	3'-8"	0'-4½"	8'-11"	5'-7"	0'-4½"	4	9'-5"	3'-9"	0'-5⅝"
K	10	10'-0"	13	16'-3"	7	5'-3"	-	-	1	1'-3"	4	5'-0"	4	7'-7"	3'-11"	0'-4⅜"	9'-6"	5'-10"	0'-4⅜"	4	9'-11"	3'-11"	0'-5½"
L	10	10'-0"	14	17'-6"	8	6'-0"	-	-	2	1'-9"	4	5'-0"	4	7'-9"	4'-0"	0'-4½"	9'-8"	5'-11"	0'-4½"	4	10'-5"	3'-10"	0'-5⅝"
M	11	11'-0"	14	17'-6"	8	6'-0"	-	-	2	2'-3"	4	5'-0"	4	8'-4"	4'-3"	0'-4⅜"	10'-3"	6'-2"	0'-4⅜"	4	10'-11"	4'-5"	0'-5½"
N	11	11'-0"	14	17'-6"	8	6'-0"	-	-	3	2'-9"	4	5'-0"	5	8'-10"	4'-9"	0'-4⅜"	10'-9"	6'-8"	0'-4⅜"	4	11'-5"	4'-11"	0'-5½"
O	12	12'-0"	15	18'-9"	8	6'-0"	-	-	2	2'-0"	5	6'-3"	5	9'-3"	4'-9"	0'-4½"	11'-3"	6'-8"	0'-4½"	4	11'-11"	4'-10"	0'-5⅝"
P	12	12'-0"	16	20'-0"	10	7'-6"	-	-	2	2'-6"	5	6'-3"	5	9'-3"	4'-10"	0'-4⅜"	11'-3"	6'-9"	0'-4⅜"	4	12'-5"	5'-0"	0'-5½"
Q	13	13'-0"	17	21'-3"	10	7'-6"	-	-	3	3'-0"	5	6'-3"	5	9'-9"	4'-10"	0'-4½"	11'-8"	6'-9"	0'-4½"	4	12'-11"	4'-11"	0'-5⅝"
R	10	10'-0"	18	22'-6"	9	6'-9"	8	4'-0"	3	3'-6"	5	6'-3"	5	8'-9"	5'-1"	0'-4⅜"	10'-9"	7'-0"	0'-4⅜"	4	13'-5"	5'-1"	0'-5½"
S	11	11'-0"	18	22'-6"	9	6'-9"	8	4'-0"	3	2'-9"	6	7'-6"	5	9'-3"	5'-1"	0'-4½"	11'-2"	7'-0"	0'-4½"	4	13'-11"	5'-5"	0'-5⅝"
T	12	12'-0"	19	23'-9"	9	6'-9"	8	4'-0"	3	3'-3"	6	7'-6"	5	9'-9"	5'-4"	0'-4⅜"	11'-9"	7'-3"	0'-4⅜"	4	14'-5"	5'-7"	0'-5½"
U	12	12'-0"	20	25'-0"	9	6'-9"	10	5'-0"	3	3'-9"	6	7'-6"	5	9'-10"	5'-4"	0'-4½"	11'-9"	7'-3"	0'-4½"	4	14'-11"	5'-6"	0'-5⅝"
V	10	10'-0"	21	26'-3"	13	9'-9"	10	5'-0"	3	3'-0"	7	8'-9"	5	9'-3"	5'-7"	0'-4⅜"	11'-3"	7'-6"	0'-4⅜"	4	15'-5"	5'-8"	0'-5½"
W	11	11'-0"	22	27'-6"	13	9'-9"	10	5'-0"	3	3'-6"	7	8'-9"	5	9'-9"	5'-7"	0'-4½"	11'-8"	7'-6"	0'-4½"	4	15'-11"	5'-7"	0'-5⅝"
X	11	11'-0"	22	27'-6"	13	9'-9"	12	6'-0"	4	4'-0"	7	8'-9"	5	10'-2"	6'-1"	0'-4⅜"	12'-1"	8'-0"	0'-4⅜"	4	16'-8"	6'-5"	0'-5½"
Y	10	10'-0"	23	28'-9"	17	12'-9"	10	5'-0"	3	3'-3"	8	10'-0"	5	10'-1"	6'-4"	0'-4½"	12'-0"	8'-3"	0'-4½"	4	17'-5"	6'-7"	0'-5⅝"
Z	10	10'-0"	24	30'-0"	17	12'-9"	12	6'-0"	3	3'-9"	8	10'-0"	5	10'-4"	6'-7"	0'-4⅜"	12'-3"	8'-6"	0'-4⅜"	4	17'-11"	6'-9"	0'-5½"
AA	11	11'-0"	25	31'-3"	17	12'-9"	12	6'-0"	4	4'-3"	8	10'-0"	5	10'-9"	6'-7"	0'-4½"	12'-8"	8'-6"	0'-4½"	4	18'-5"	6'-8"	0'-5⅝"
BB	12	12'-0"	26	32'-6"	17	12'-9"	12	6'-0"	4	4'-9"	8	10'-0"	6	11'-3"	6'-10"	0'-4⅜"	13'-4"	8'-10"	0'-4⅜"	4	18'-11"	6'-10"	0'-5½"
CC	13	13'-0"	26	32'-6"	17	12'-9"	12	6'-0"	4	4'-0"	9	11'-3"	6	11'-9"	6'-10"	0'-4½"	13'-9"	8'-10"	0'-4½"	4	19'-5"	7'-2"	0'-5⅝"
DD	12	12'-0"	27	33'-9"	17	12'-9"	16	8'-0"	4	4'-6"	9	11'-3"	6	12'-1"	7'-7"	0'-4⅜"	14'-1"	9'-7"	0'-4⅜"	4	20'-5"	7'-10"	0'-5½"
EE	12	12'-0"	28	35'-0"	17	12'-9"	18	9'-0"	4	5'-0"	9	11'-3"	6	12'-1"	7'-7"	0'-4½"	14'-1"	9'-7"	0'-4½"	4	20'-11"	7'-9"	0'-5⅝"

A COPY OF THE ORIGINAL SEALED AND SIGNED DRAWING IS ON FILE IN THE CENTRAL OFFICE

VDOT
ROAD AND BRIDGE STANDARDS

SHEET 7 OF 8 | REVISION DATE
1007.07 | 07/12

WING DETAILS

2:1 FILL SLOPE - TYPE I

VIRGINIA DEPARTMENT OF TRANSPORTATION

SPECIFICATION REFERENCE

BCW-21

WING	WV3							WV4							WH1			WH2					WH3	
	SIZE	a			LENGTH			SIZE	a			LENGTH			SIZE	LENGTH	• Ea	SIZE	LENGTH			• EA	SIZE	LENGTH
		FROM	TO	VARY BY	FROM	TO	VARY BY		FROM	TO	VARY BY	FROM	TO	VARY BY					FROM	TO	VARY BY			
A	-	-	-	-	-	-	-	-	-	-	-	-	-	_	4	6'-6"	2	4	6'-0"	2'-7"	3'-4⅛"	2	4	6'-11"
B	-	-	-	-	-	-	-	-	-	-	-	-	-	_	4	7'-6"	2	4	5'-9"	2'-6"	3'-2½"	2	4	8'-1"
C	-	-	-	-	-	-	-	-	-	-	-	-	-	_	4	8'-6"	2	4	6'-0"	2'-7"	3'-4¼"	2	4	9'-1"
D	-	-	-	-	-	-	-	-	-	-	-	-	-	_	4	9'-6"	2	4	9'-1"	2'-6"	3'-3¼"	2	4	10'-1"
E	-	-	-	-	-	-	-	-	-	-	-	-	-	_	4	10'-6"	2	4	9'-4"	2'-7"	3'-4⅛"	2	4	11'-1"
F	-	-	-	-	-	-	-	-	-	-	-	-	-	_	4	11'-6"	2	4	9'-1"	2'-6"	3'-3⅛"	2	4	12'-4"
G	-	-	-	-	-	-	-	-	-	-	-	-	-	_	4	12'-6"	2	4	9'-4"	2'-7"	3'-4¼"	2	4	13'-4"
H	-	-	-	-	-	-	-	-	-	-	-	-	-	_	4	13'-6"	2	4	12'-4"	2'-6"	3'-3⅜"	2	4	14'-4"
I	4	8'-11"	7'-3"	0'-3¼"	10'-10"	9'-2"	0'-3¼"	-	-	-	-	-	-	_	4	14'-6"	2	4	12'-7"	2'-7"	3'-4⅛"	2	4	15'-6"
J	4	9'-5"	7'-5"	0'-3⅜"	11'-4"	9'-4"	0'-3⅜"	-	-	-	-	-	-	_	4	15'-6"	2	4	12'-4"	2'-6"	3'-3⅜"	2	4	16'-6"
K	5	9'-11"	8'-0"	0'-3¼"	11'-10"	9'-11"	0'-3¼"	-	-	-	-	-	-	_	4	16'-6"	2	4	16'-0"	2'-7"	3'-4⅛"	2	4	17'-6"
L	5	10'-5"	8'-2"	0'-3⅜"	12'-4"	10'-1"	0'-3⅜"	-	-	-	-	-	-	_	4	17'-6"	2	4	15'-9"	2'-7"	3'-3½"	2	4	18'-9"
M	6	10'-11"	8'-8"	0'-3¼"	12'-11"	10'-9"	0'-3¼"	-	-	-	-	-	-	_	4	18'-6"	2	4	16'-0"	2'-7"	3'-4⅛"	2	4	19'-9"
N	6	11'-5"	9'-2"	0'-3¼"	13'-5"	11'-3"	0'-3¼"	-	-	-	-	-	-	_	4	18'-6"	2	4	16'-0"	2'-7"	3'-4⅛"	2	4	19'-9"
O	6	11'-11"	9'-8"	0'-3⅜"	13'-11"	11'-8"	0'-3⅜"	-	-	-	-	-	-	_	4	19'-6"	2	4	19'-0"	2'-6"	3'-3⅝"	2	4	20'-9"
P	6	12'-5"	9'-8"	0'-3¼"	14'-5"	11'-8"	0'-3¼"	-	-	-	-	-	-	_	4	20'-6"	2	4	19'-3"	2'-7"	3'-4⅛"	2	4	21'-11"
Q	7	12'-11"	10'-1"	0'-3⅜"	15'-0"	12'-3"	0'-3⅜"	-	-	-	-	-	-	-	4	21'-6"	2	4	19'-0"	2'-6"	3'-3⅝"	2	4	23'-0"
R	6	11'-8"	9'-2"	0'-3¼"	13'-8"	11'-2"	0'-3¼"	6	13'-5"	11'-11"	0'-2⅛"	15'-5"	14'-0"	0'-2⅛"	4	22'-6"	2	4	19'-3"	2'-7"	3'-4⅛"	2	4	24'-0"
S	6	12'-2"	9'-7"	0'-3⅜"	14'-2"	11'-7"	0'-3⅜"	6	13'-11"	12'-5"	0'-2¼"	15'-11"	14'-5"	0'-2¼"	4	23'-6"	2	4	22'-5"	2'-7"	3'-3⅝"	2	4	25'-2"
T	6	12'-8"	10'-2"	0'-3¼"	14'-8"	12'-2"	0'-3¼"	6	14'-5"	12'-11"	0'-2⅛"	16'-5"	15'-0"	0'-2⅛"	4	24'-6"	2	4	22'-8"	2'-7"	3'-4⅛"	2	4	26'-2"
U	7	12'-9"	10'-3"	0'-3⅜"	14'-10"	12'-4"	0'-3⅜"	7	14'-11"	13'-0"	0'-2¼"	17'-0"	15'-2"	0'-2¼"	4	25'-6"	2	4	22'-5"	2'-7"	3'-3⅝"	2	4	27'-3"
V	7	13'-3"	9'-8"	0'-3¼"	15'-5"	11'-9"	0'-3¼"	7	15'-5"	13'-7"	0'-2⅛"	17'-6"	15'-8"	0'-2⅛"	4	26'-6"	2	4	26'-0"	2'-7"	3'-4⅛"	2	4	28'-3"
W	7	13'-9"	10'-1"	0'-3⅜"	15'-10"	12'-2"	0'-3⅜"	7	15'-11"	14'-0"	0'-2¼"	18'-0"	16'-2"	0'-2¼"	4	27'-6"	2	4	25'-9"	2'-6"	3'-3¾"	2	4	29'-5"
X	7	14'-2"	10'-6"	0'-3¼"	16'-3"	12'-8"	0'-3¼"	7	16'-8"	14'-5"	0'-2⅛"	18'-9"	16'-7"	0'-2⅛"	4	28'-6"	2	4	26'-0"	2'-7"	3'-4⅛"	2	4	30'-5"
Y	7	15'-3"	10'-6"	0'-3⅜"	17'-4"	12'-7"	0'-3⅜"	7	17'-5"	15'-6"	0'-2¼"	19'-6"	17'-8"	0'-2¼"	4	29'-6"	2	4	29'-0"	2'-7"	3'-3¾"	2	4	31'-6"
Z	7	15'-5"	10'-8"	0'-3¼"	17'-6"	12'-9"	0'-3¼"	7	17'-11"	15'-8"	0'-2⅛"	20'-0"	17'-10"	0'-2⅛"	4	30'-6"	2	4	29'-3"	2'-7"	3'-4⅛"	2	4	32'-7"
AA	7	15'-11"	11'-1"	0'-3⅜"	18'-0"	13'-2"	0'-3⅜"	7	18'-5"	16'-2"	0'-2¼"	20'-6"	18'-3"	0'-2¼"	4	31'-6"	2	4	29'-0"	2'-7"	3'-3¾"	2	4	33'-7"
BB	8	16'-5"	11'-8"	0'-3¼"	18'-7"	13'-10"	0'-3¼"	8	18'-11"	16'-8"	0'-2⅛"	21'-1"	18'-11"	0'-2⅛"	4	32'-6"	2	4	29'-3"	2'-7"	3'-4⅛"	2	4	34'-7"
CC	8	16'-11"	12'-1"	0'-3⅜"	19'-1"	14'-4"	0'-3⅜"	8	19'-5"	17'-2"	0'-2¼"	21'-7"	19'-4"	0'-2¼"	4	33'-6"	2	4	32'-4"	2'-7"	3'-3¾"	2	4	35'-10"
DD	8	17'-2"	12'-5"	0'-3¼"	19'-4"	14'-7"	0'-3¼"	8	20'-5"	17'-5"	0'-2⅛"	22'-7"	19'-8"	0'-2⅛"	4	34'-6"	2	4	32'-7"	2'-8"	3'-4"	2	4	36'-10"
EE	8	17'-3"	12'-6"	0'-3⅜"	19'-6"	14'-8"	0'-3⅜"	9	20'-11"	17'-6"	0'-2¼"	23'-4"	20'-0"	0'-2¼"	4	35'-6"	2	4	32'-4"	2'-7"	3'-3¾"	2	4	37'-11"

A COPY OF THE ORIGINAL SEALED AND SIGNED DRAWING IS ON FILE IN THE CENTRAL OFFICE

SPECIFICATION REFERENCE

WING DETAILS

2:1 FILL SLOPE - TYPE I

VIRGINIA DEPARTMENT OF TRANSPORTATION

VDOT

ROAD AND BRIDGE STANDARDS

REVISION DATE 07/12

SHEET 8 OF 8

1007.08

BCW-22

GENERAL NOTES

Specifications:

AASHTO LRFD Bridge Design Specifications 5th Edition 2010; 2011 Interim Revisions; and VDOT Modifications

Limits of validity for Standard Wingwall design

The standard wingwall designs are based on the following assumptions:

there is no structural connection between the wall and the box culvert
traffic surcharge loading is neglected.

Backfill

Backfill shall comprise granular material with an internal friction angle Φ′ of at least 32 °. Cohesive backfill shall not be permitted. Compaction of the backfill material within a distance of one-half the height of the wall shall be by hand compactors only.

Drainage

The Contractor shall provide the drainage system indicated on Sheet 2.

The cost for the drainage system (including porous backfill, 6" diameter non-rigid tubing and other items required) shall be incidental to the cost bid for Concrete.

Concrete

All concrete shall be Class A4.

Reinforcement

Deformed reinforcing bars shall conform to ASTM A615, Grade 60. All reinforcing bar dimensions on the detailed drawings are to centers of bars except where otherwise noted and are subject to fabrication and construction tolerances.

Dimensions on bar diagrams are out-to-out of bars. Bars are straight unless otherwise shown.

The concrete cover to the outermost reinforcement bars shall be as follows:

Wall footing (all faces) 3" minimum cover
Wall stem (all faces) 2½" minimum cover

At the Contractor's option WV Series bars may be spliced at top of the footing in order to facilitate construction. Splice lengths shall be in accordance with Table C on Sheet 2. No additional compensation shall be provided for the increase in reinforcing steel quantity due to the splices.

Miscellaneous

Weepholes shall be placed at the lowest point feasible for free drainage away from the wing.

Four Type I Wings are to be used for straight crossings and skews up to 20°. Two Type I and two Type II Wings are to be used for skews from 25° to 45°. For skews above 45°, special design wings are required. The wingwall to be used for each culvert is shown on the BC series sheets.

The designs shown are applicable for a 45° skew with the roadway and other conditions indicated. Any change in these conditions invalidates these designs.

Quantities shown are for one wing.

WING	Wall Quantities		qr_min ksf High End	qr_min ksf Low End
	Concrete CY	Reinforcement LB		
A	2.9	253	0.91	0.41
B	3.5	309	1.05	0.41
C	3.9	334	1.21	0.41
D	4.6	371	1.40	0.41
E	5.5	434	1.49	0.41
F	6.2	472	1.71	0.41
G	7.1	550	1.79	0.41
H	7.9	590	2.03	0.41
I	8.8	661	2.10	0.41
J	9.7	742	2.36	0.41
K	10.9	856	2.43	0.41
L	11.8	950	2.70	0.41
M	13.1	1124	2.76	0.41
N	14.1	1241	3.05	0.41
O	15.3	1350	3.10	0.41
P	16.8	1508	3.17	0.41
Q	17.9	1773	3.45	0.41
R	19.1	1812	3.76	0.41
S	20.8	2030	3.80	0.41
T	22.0	2223	4.13	0.41
U	23.5	2475	4.16	0.41
V	25.3	2682	4.21	0.41
W	29.2	3124	4.43	0.44
X	34.5	3479	4.85	0.48
Y	36.3	3853	5.19	0.48
Z	38.8	4162	5.23	0.48
AA	41.0	4469	5.28	0.48
BB	42.9	4902	5.61	0.48
CC	46.6	5345	5.40	0.48
DD	50.5	5863	5.28	0.48
EE	52.5	6610	5.55	0.48

A COPY OF THE ORIGINAL SEALED AND SIGNED DRAWING IS ON FILE IN THE CENTRAL OFFICE

VDOT
ROAD AND BRIDGE STANDARDS

SHEET 1 OF 8 | REVISION DATE
1007.09 | 07/12

WING DETAIL

2:1 FILL SLOPE - TYPE II

VIRGINIA DEPARTMENT OF TRANSPORTATION

SPECIFICATION REFERENCE

BCW-22

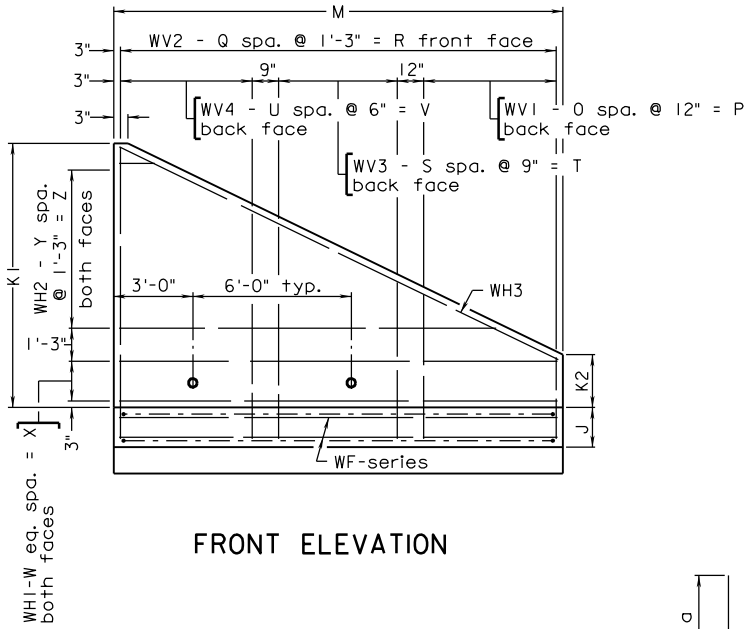

FRONT ELEVATION

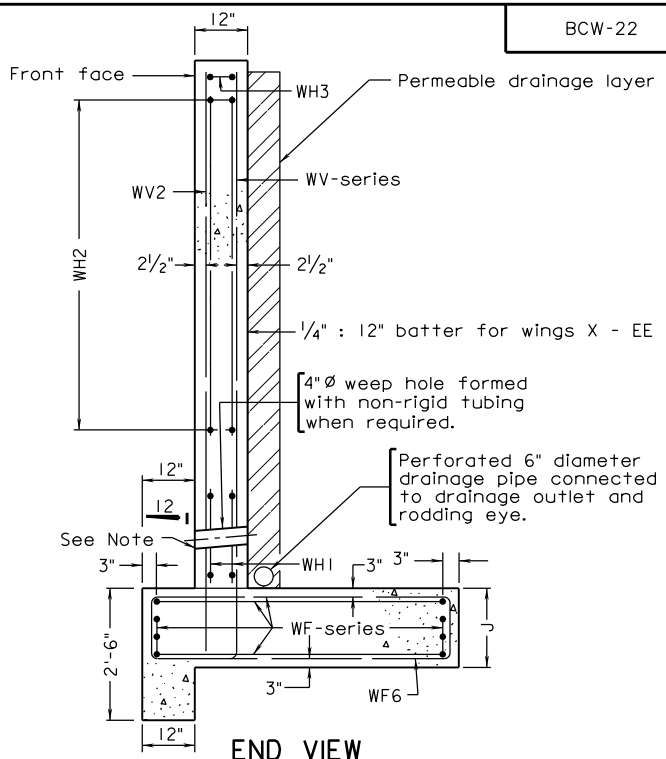

END VIEW

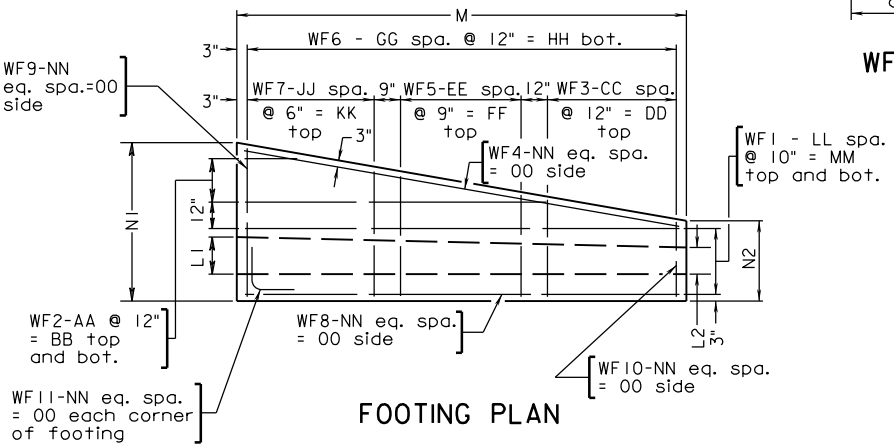

FOOTING PLAN

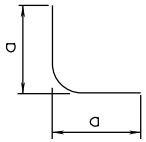

WF11

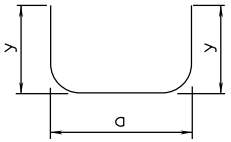

WF1 TO WF3, WF5 TO WF7

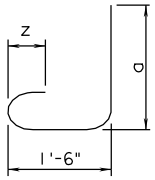

WV1, WV3, WV4

TABLE A	
Wall	y
A-W	9½"
X	1'-0½"
Y-CC	1'-3½"
DD-EE	1'-9½"

TABLE B		
Bar Size	Pin Dia.	Z
#3	2¼"	4"
#4	3"	4½"
#5	3¾"	5"
#6	4½"	6"
#7	5¼"	7"
#8	6"	8"
#9	9"	10⅛"

TABLE C	
Bar Size	Splice Length
#4	1'- 9"
#5	2'- 4"
#6	2'- 7"
#7	3'- 3"
#8	4'- 2"
#9	5'- 4"

A COPY OF THE ORIGINAL SEALED AND SIGNED DRAWING AND DESIGN STATEMENT IS ON FILE IN THE CENTRAL OFFICE.

SPECIFICATION REFERENCE

WING DETAIL

2:1 FILL SLOPE - TYPE II

VIRGINIA DEPARTMENT OF TRANSPORTATION

VDOT
ROAD AND BRIDGE STANDARDS

REVISION DATE 07/16

SHEET 2 OF 8

1007.10

BCW-22

WING	J	K1	K2	L1	L2	M	N1	N2	NO. WEEP HOLES	FOOTING BAR SPACINGS													
										WF1		WF2		WF3		WF4, WF8 TO WF10		WF5		WF6		WF7	
										LL	MM	AA	BB	CC	DD	NN	OO	EE	FF	GG	HH	JJ	KK
A	1'-6"	4'-0"	1'-0"	1'-0"	1'-0"	9'-0"	4'-0"	3'-0"	-	3	2'-6"	-	-	8	8'-0"	1	0'-8"	-	-	8	8'-0"	-	-
B	1'-6"	4'-6"	1'-0"	1'-0"	1'-0"	10'-6"	4'-0"	3'-0"	-	3	2'-6"	-	-	10	10'-0"	1	0'-8"	-	-	10	10'-0"	-	-
C	1'-6"	5'-0"	1'-0"	1'-0"	1'-0"	11'-6"	4'-0"	3'-0"	-	3	2'-6"	-	-	11	11'-0"	1	0'-8"	-	-	11	11'-0"	-	-
D	1'-6"	5'-6"	1'-0"	1'-0"	1'-0"	13'-0"	4'-0"	3'-0"	-	3	2'-6"	-	-	12	12'-0"	1	0'-8"	-	-	12	12'-0"	-	-
E	1'-6"	6'-0"	1'-0"	1'-0"	1'-0"	14'-6"	4'-6"	3'-0"	-	3	2'-6"	-	-	14	14'-0"	1	0'-8"	-	-	14	14'-0"	-	-
F	1'-6"	6'-6"	1'-0"	1'-0"	1'-0"	16'-0"	4'-6"	3'-0"	-	3	2'-6"	-	-	15	15'-0"	1	0'-8"	-	-	15	15'-0"	-	-
G	1'-6"	7'-0"	1'-0"	1'-0"	1'-0"	17'-6"	5'-0"	3'-0"	-	3	2'-6"	-	-	17	17'-0"	1	0'-8"	-	-	17	17'-0"	-	-
H	1'-6"	7'-6"	1'-0"	1'-0"	1'-0"	19'-0"	5'-0"	3'-0"	-	3	2'-6"	-	-	18	18'-0"	1	0'-8"	-	-	18	18'-0"	-	-
I	1'-6"	8'-0"	1'-0"	1'-0"	1'-0"	20'-0"	5'-6"	3'-0"	-	3	2'-6"	1	1'-0"	12	12'-0"	1	0'-8"	8	6'-0"	19	19'-0"	-	-
J	1'-6"	8'-6"	1'-0"	1'-0"	1'-0"	21'-6"	5'-6"	3'-0"	-	3	2'-6"	1	1'-0"	12	12'-0"	1	0'-8"	10	7'-6"	21	21'-0"	-	-
K	1'-6"	9'-0"	1'-0"	1'-0"	1'-0"	23'-0"	6'-0"	3'-0"	-	3	2'-6"	1	1'-0"	13	13'-0"	1	0'-8"	11	8'-3"	22	22'-0"	-	-
L	1'-6"	9'-6"	1'-0"	1'-0"	1'-0"	24'-6"	6'-0"	3'-0"	-	3	2'-6"	1	1'-0"	14	14'-0"	1	0'-8"	12	9'-0"	24	24'-0"	-	-
M	1'-6"	10'-0"	1'-0"	1'-0"	1'-0"	26'-0"	6'-6"	3'-0"	2	3	2'-6"	2	2'-0"	15	15'-0"	1	0'-8"	12	9'-0"	25	25'-0"	-	-
N	1'-6"	10'-6"	1'-0"	1'-0"	1'-0"	27'-6"	6'-6"	3'-0"	2	3	2'-6"	2	2'-0"	16	16'-0"	1	0'-8"	13	9'-9"	27	27'-0"	-	-
O	1'-6"	11'-0"	1'-0"	1'-0"	1'-0"	28'-6"	7'-0"	3'-0"	2	3	2'-6"	2	2'-0"	17	17'-0"	1	0'-8"	13	9'-9"	28	28'-0"	-	-
P	1'-6"	11'-6"	1'-0"	1'-0"	1'-0"	30'-0"	7'-6"	3'-0"	3	3	2'-6"	3	3'-0"	18	18'-0"	1	0'-8"	14	10'-6"	29	29'-0"	-	-
Q	1'-6"	12'-0"	1'-0"	1'-0"	1'-0"	31'-6"	7'-6"	3'-0"	3	3	2'-6"	3	3'-0"	18	18'-0"	1	0'-8"	16	12'-0"	31	31'-0"	-	-
R	1'-6"	12'-6"	1'-0"	1'-0"	1'-0"	33'-0"	7'-6"	3'-0"	3	3	2'-6"	3	3'-0"	15	15'-0"	1	0'-8"	13	9'-9"	32	32'-0"	12	6'-0"
S	1'-6"	13'-0"	1'-0"	1'-0"	1'-0"	34'-6"	8'-0"	3'-0"	3	3	2'-6"	3	3'-0"	15	15'-0"	1	0'-8"	13	9'-9"	34	34'-0"	15	7'-6"
T	1'-6"	13'-6"	1'-0"	1'-0"	1'-0"	36'-0"	8'-0"	3'-0"	4	3	2'-6"	3	3'-0"	14	14'-0"	1	0'-8"	15	11'-3"	35	35'-0"	17	8'-6"
U	1'-6"	14'-0"	1'-0"	1'-0"	1'-0"	37'-0"	8'-6"	3'-0"	4	3	2'-6"	4	4'-0"	14	14'-0"	1	0'-8"	17	12'-9"	36	36'-0"	16	8'-0"
V	1'-6"	14'-6"	1'-0"	1'-0"	1'-0"	38'-6"	9'-0"	3'-0"	4	3	2'-6"	4	4'-0"	15	15'-0"	1	0'-8"	17	12'-9"	38	38'-0"	17	8'-6"
W	1'-9"	15'-0"	1'-0"	1'-0"	1'-0"	40'-0"	9'-6"	3'-0"	5	3	2'-6"	5	5'-0"	15	15'-0"	1	0'-11"	19	14'-3"	39	39'-0"	17	8'-6"
X	2'-0"	15'-6"	1'-0"	1'-3 3/4"	1'-0 1/4"	41'-6"	10'-0"	3'-0"	5	3	2'-6"	5	5'-0"	17	17'-0"	2	0'-7"	17	12'-9"	41	41'-0"	19	9'-6"
Y	2'-0"	16'-0"	1'-0"	1'-4"	1'-0 1/4"	43'-0"	10'-0"	3'-0"	5	3	2'-6"	5	5'-0"	20	20'-0"	2	0'-7"	15	11'-3"	42	42'-0"	19	9'-6"
Z	2'-0"	16'-6"	1'-0"	1'-4 1/8"	1'-0 1/4"	44'-6"	10'-6"	3'-0"	5	3	2'-6"	6	6'-0"	20	20'-0"	2	0'-7"	17	12'-9"	44	44'-0"	19	9'-6"
AA	2'-0"	17'-0"	1'-0"	1'-4 1/4"	1'-0 1/4"	45'-6"	11'-0"	3'-0"	6	3	2'-6"	6	6'-0"	19	19'-0"	2	0'-7"	19	14'-3"	45	45'-0"	20	10'-0"
BB	2'-0"	17'-6"	1'-0"	1'-4 3/8"	1'-0 1/4"	47'-0"	11'-0"	3'-0"	6	3	2'-6"	6	6'-0"	20	20'-0"	2	0'-7"	19	14'-3"	46	46'-0"	21	10'-6"
CC	2'-0"	18'-0"	1'-0"	1'-4 1/2"	1'-0 1/4"	48'-6"	12'-0"	3'-0"	6	3	2'-6"	7	7'-0"	19	19'-0"	2	0'-7"	21	15'-9"	48	48'-0"	23	11'-6"
DD	2'-0"	18'-6"	1'-0"	1'-4 5/8"	1'-0 1/4"	50'-0"	13'-0"	3'-0"	7	3	2'-6"	8	8'-0"	18	18'-0"	2	0'-7"	23	17'-3"	49	49'-0"	25	12'-6"
EE	2'-0"	19'-0"	1'-0"	1'-4 3/4"	1'-0 1/4"	51'-6"	13'-0"	3'-0"	7	3	2'-6"	8	8'-0"	18	18'-0"	2	0'-7"	25	18'-9"	51	51'-0"	25	12'-6"

A COPY OF THE ORIGINAL SEALED AND SIGNED DRAWING IS ON FILE IN THE CENTRAL OFFICE

VDOT
ROAD AND BRIDGE STANDARDS

SHEET 3 OF 8 | REVISION DATE
1007.11 | 07/12

WING DETAILS

2:1 FILL SLOPE - TYPE II

VIRGINIA DEPARTMENT OF TRANSPORTATION

SPECIFICATION REFERENCE

BCW-22

WING	WF1				WF2									WF3						
	SIZE	a	LENGTH	* Ea	SIZE	a			LENGTH			* Ea		SIZE	a			LENGTH		
						FROM	TO	VARY BY	FROM	TO	VARY BY				FROM	TO	VARY BY	FROM	TO	VARY BY
A	4	8'-4"	9'-9"	2	4	1'-8"	10'-8"	-	3'-0"	12'-0"	-	2		4	3'-5"	2'-6"	0'-1¼"	4'-9"	3'-11"	0'-1¼"
B	4	9'-11"	11'-3"	2	4	2'-0"	12'-6"	-	3'-5"	13'-11"	-	2		4	3'-5"	2'-5"	0'-1⅛"	4'-9"	3'-10"	0'-1⅛"
C	4	10'-11"	12'-3"	2	4	2'-3"	13'-9"	-	3'-8"	15'-2"	-	2		4	3'-5"	2'-5"	0'-1"	4'-9"	3'-10"	0'-1"
D	4	12'-4"	13'-9"	2	4	2'-8"	15'-8"	-	4'-0"	17'-0"	-	2		4	3'-5"	2'-6"	0'-0¾"	4'-9"	3'-10"	0'-0¾"
E	4	13'-11"	15'-3"	2	4	6'-8"	6'-8"	-	8'-0"	8'-0"	-	2		4	3'-11"	2'-5"	0'-1⅛"	5'-3"	3'-10"	0'-1⅛"
F	4	15'-4"	16'-9"	2	4	7'-5"	7'-5"	-	8'-9"	8'-9"	-	2		4	3'-11"	2'-6"	0'-1⅛"	5'-3"	3'-10"	0'-1⅛"
G	4	16'-11"	18'-3"	2	4	10'-4"	10'-4"	-	11'-8"	11'-8"	-	2		4	4'-5"	2'-5"	0'-1⅜"	5'-9"	3'-10"	0'-1⅜"
H	4	18'-5"	19'-9"	2	4	11'-3"	11'-3"	-	12'-8"	12'-8"	-	2		4	4'-5"	2'-6"	0'-1¼"	5'-9"	3'-10"	0'-1¼"
I	4	19'-5"	20'-9"	2	4	13'-5"	5'-5"	8'-0"	14'-9"	6'-9"	8'-0"	2		4	4'-0"	2'-6"	0'-1½"	5'-5"	3'-11"	0'-1½"
J	4	20'-11"	22'-3"	2	4	14'-5"	5'-10"	8'-7⅛"	15'-10"	7'-2"	8'-7⅛"	2		4	3'-11"	2'-6"	0'-1⅜"	5'-3"	3'-11"	0'-1⅜"
K	4	22'-5"	23'-9"	2	4	16'-8"	9'-0"	7'-8"	18'-0"	10'-4"	7'-8"	2		4	4'-2"	2'-6"	0'-1½"	5'-7"	3'-10"	0'-1½"
L	4	23'-11"	25'-3"	2	4	17'-9"	9'-7"	8'-2"	19'-2"	11'-0"	8'-2"	2		4	4'-2"	2'-5"	0'-1⅜"	5'-6"	3'-10"	0'-1⅜"
M	4	25'-5"	26'-9"	2	4	19'-10"	4'-11"	7'-5⅛"	21'-2"	6'-4"	7'-5⅛"	2		4	4'-6"	2'-6"	0'-1½"	5'-11"	3'-11"	0'-1½"
N	4	26'-11"	28'-3"	2	4	21'-0"	5'-3"	7'-10¼"	22'-4"	6'-8"	7'-10¼"	2		4	4'-6"	2'-6"	0'-1½"	5'-11"	3'-10"	0'-1½"
O	4	27'-11"	29'-3"	2	4	22'-6"	8'-3"	7'-1½"	23'-11"	9'-8"	7'-1½"	2		4	4'-10"	2'-6"	0'-1⅝"	6'-3"	3'-10"	0'-1⅝"
P	4	29'-5"	30'-9"	2	4	24'-5"	4'-5"	6'-8"	25'-9"	5'-9"	6'-8"	2		4	5'-2"	2'-5"	0'-1¾"	6'-6"	3'-10"	0'-1¾"
Q	4	30'-11"	32'-3"	2	4	25'-8"	4'-8"	7'-0"	27'-0"	6'-0"	7'-0"	2		4	5'-0"	2'-5"	0'-1⅝"	6'-5"	3'-10"	0'-1⅝"
R	4	32'-4"	33'-9"	2	4	26'-11"	4'-11"	7'-4"	28'-3"	6'-3"	7'-4"	2		4	4'-6"	2'-5"	0'-1⅝"	5'-10"	3'-10"	0'-1⅝"
S	4	33'-11"	35'-3"	2	4	28'-8"	8'-0"	6'-10¾"	30'-1"	9'-5"	6'-10¾"	2		4	4'-8"	2'-5"	0'-1⅝"	6'-0"	3'-10"	0'-1⅝"
T	4	35'-4"	36'-9"	2	4	30'-0"	8'-5"	7'-2⅜"	31'-4"	9'-9"	7'-2¼"	2		4	4'-5"	2'-5"	0'-1⅝"	5'-9"	3'-10"	0'-1⅝"
U	4	36'-4"	37'-9"	2	4	31'-4"	4'-5"	6'-8⅝"	32'-8"	5'-10"	6'-8⅝"	2		4	4'-6"	2'-5"	0'-1¾"	5'-11"	3'-10"	0'-1¾"
V	4	37'-11"	39'-3"	2	4	33'-1"	7'-5"	6'-5"	34'-5"	8'-9"	6'-5"	2		4	4'-10"	2'-5"	0'-1¾"	6'-2"	3'-10"	0'-1¾"
W	4	39'-4"	41'-3"	2	5	34'-9"	4'-0"	6'-1¾"	36'-7"	5'-10"	6'-1¾"	2		4	4'-11"	2'-5"	0'-1¾"	6'-9"	4'-4"	0'-1¾"
X	4	40'-11"	43'-3"	2	5	36'-5"	6'-9"	5'-11⅛"	38'-9"	9'-1"	6'-11⅛"	2		4	5'-4"	2'-6"	0'-2"	7'-8"	4'-10"	0'-2"
Y	4	42'-4"	44'-9"	2	5	37'-9"	7'-1"	6'-1⅝"	40'-1"	9'-5"	6'-1⅝"	2		4	5'-9"	2'-5"	0'-1¾"	8'-1"	4'-10"	0'-1¾"
Z	4	43'-11"	46'-3"	2	5	39'-5"	3'-10"	5'-11⅛"	41'-9"	6'-2"	5'-11⅛"	2		4	5'-10"	2'-6"	0'-2"	8'-2"	4'-10"	0'-2"
AA	4	44'-11"	47'-3"	2	5	40'-7"	6'-6"	5'-8¼"	42'-11"	8'-10"	5'-8¼"	2		4	5'-10"	2'-6"	0'-2"	8'-2"	4'-10"	0'-2"
BB	4	46'-4"	48'-9"	2	5	42'-0"	6'-9"	5'-10½"	44'-4"	9'-1"	5'-10½"	2		4	5'-10"	2'-6"	0'-2"	8'-3"	4'-10"	0'-2"
CC	4	47'-11"	50'-3"	2	5	43'-10"	6'-1"	5'-4⅝"	46'-2"	8'-5"	5'-4⅝"	2		4	6'-0"	2'-6"	0'-2⅛"	8'-4"	4'-10"	0'-2⅛"
DD	4	49'-4"	51'-9"	2	5	45'-8"	5'-8"	5'-0"	47'-11"	7'-11"	5'-0"	2		4	6'-1"	2'-6"	0'-2⅜"	8'-5"	4'-10"	0'-2⅜"
EE	4	50'-11"	53'-3"	2	5	47'-0"	5'-10"	5'-1¾"	49'-4"	8'-2"	5'-1¾"	2		4	6'-0"	2'-6"	0'-2¼"	8'-4"	4'-10"	0'-2¼"

A COPY OF THE ORIGINAL SEALED AND SIGNED DRAWING IS ON FILE IN THE CENTRAL OFFICE

SPECIFICATION REFERENCE

WING DETAILS

2:1 FILL SLOPE - TYPE II

VIRGINIA DEPARTMENT OF TRANSPORTATION

VDOT

ROAD AND BRIDGE STANDARDS

REVISION DATE 07/12

SHEET 4 OF 8

1007.12

BCW-22

WING	WF4		WF5							WF6						
	SIZE	LENGTH	SIZE	a			LENGTH			SIZE	a			LENGTH		
				FROM	TO	VARY BY	FROM	TO	VARY BY		FROM	TO	VARY BY	FROM	TO	VARY BY
A	4	8'-2"	-	-	-	-	-	-	-	4	3'-4"	2'-6"	0'-1¼"	4'-9"	3'-10"	0'-1¼"
B	4	9'-8"	-	-	-	-	-	-	-	4	3'-4"	2'-5"	0'-1⅛"	4'-9"	3'-9"	0'-1⅛"
C	4	10'-8"	-	-	-	-	-	-	-	4	3'-4"	2'-5"	0'-1"	4'-9"	3'-9"	0'-1"
D	4	12'-2"	-	-	-	-	-	-	-	4	3'-4"	2'-5"	0'-0¾"	4'-9"	3'-10"	0'-0¾"
E	4	13'-8"	-	-	-	-	-	-	-	4	3'-10"	2'-5"	0'-1⅛"	5'-3"	3'-9"	0'-1⅛"
F	4	15'-2"	-	-	-	-	-	-	-	4	3'-10"	2'-5"	0'-1⅛"	5'-3"	3'-10"	0'-1⅛"
G	4	16'-9"	-	-	-	-	-	-	-	4	4'-4"	2'-5"	0'-1⅜"	5'-9"	3'-9"	0'-1⅜"
H	4	18'-3"	-	-	-	-	-	-	-	4	4'-4"	2'-5"	0'-1¼"	5'-9"	3'-10"	0'-1¼"
I	4	19'-3"	4	4'-11"	4'-2"	0'-1⅛"	6'-3"	5'-6"	0'-1⅛"	4	4'-10"	2'-6"	0'-1½"	6'-3"	3'-10"	0'-1½"
J	4	20'-9"	4	4'-11"	4'-0"	0'-1"	6'-3"	5'-5"	0'-1"	4	4'-10"	2'-5"	0'-1⅜"	6'-3"	3'-9"	0'-1⅜"
K	4	22'-4"	4	5'-5"	4'-4"	0'-1⅛"	6'-9"	5'-8"	0'-1⅛"	4	5'-4"	2'-6"	0'-1½"	6'-9"	3'-10"	0'-1½"
L	4	23'-10"	4	5'-5"	4'-3"	0'-1"	6'-9"	5'-8"	0'-1"	4	5'-4"	2'-5"	0'-1⅜"	6'-9"	3'-9"	0'-1⅜"
M	4	25'-4"	5	5'-11"	4'-8"	0'-1⅛"	7'-2"	6'-0"	0'-1⅛"	4	5'-10"	2'-6"	0'-1½"	7'-3"	3'-10"	0'-1½"
N	4	26'-10"	5	5'-11"	4'-8"	0'-1⅛"	7'-2"	6'-0"	0'-1⅛"	4	5'-10"	2'-5"	0'-1½"	7'-3"	3'-9"	0'-1½"
O	4	27'-11"	5	6'-5"	5'-0"	0'-1¼"	7'-8"	6'-4"	0'-1¼"	4	6'-4"	2'-5"	0'-1⅝"	7'-9"	3'-9"	0'-1⅝"
P	4	29'-6"	6	6'-11"	5'-4"	0'-1¼"	8'-2"	6'-7"	0'-1¼"	4	6'-10"	2'-6"	0'-1¾"	8'-3"	3'-10"	0'-1¾"
Q	4	30'-11"	6	6'-11"	5'-2"	0'-1¼"	8'-2"	6'-5"	0'-1¼"	4	6'-10"	2'-5"	0'-1⅝"	8'-3"	3'-9"	0'-1⅝"
R	4	32'-5"	5	6'-0"	4'-8"	0'-1⅛"	7'-3"	5'-11"	0'-1⅛"	4	6'-10"	2'-6"	0'-1⅝"	8'-3"	3'-10"	0'-1⅝"
S	4	34'-0"	5	6'-2"	4'-9"	0'-1¼"	7'-6"	6'-1"	0'-1¼"	4	7'-4"	2'-5"	0'-1⅝"	8'-9"	3'-9"	0'-1⅝"
T	4	35'-6"	5	6'-1"	4'-6"	0'-1⅛"	7'-5"	5'-10"	0'-1⅛"	4	7'-4"	2'-6"	0'-1⅝"	8'-9"	3'-10"	0'-1⅝"
U	4	36'-6"	5	6'-7"	4'-8"	0'-1¼"	7'-11"	6'-0"	0'-1¼"	4	7'-10"	2'-6"	0'-1¾"	9'-3"	3'-10"	0'-1¾"
V	4	38'-1"	5	6'-11"	4'-11"	0'-1⅜"	8'-3"	6'-3"	0'-1⅜"	4	8'-4"	2'-5"	0'-1¾"	9'-9"	3'-9"	0'-1¾"
W	4	39'-8"	5	7'-4"	5'-1"	0'-1⅜"	9'-2"	6'-11"	0'-1⅜"	5	8'-10"	2'-6"	0'-1¾"	10'-8"	4'-4"	0'-1¾"
X	4	41'-3"	5	7'-8"	5'-6"	0'-1½"	10'-0"	7'-10"	0'-1½"	5	9'-4"	2'-5"	0'-2"	11'-8"	4'-9"	0'-2"
Y	4	42'-8"	5	7'-8"	5'-11"	0'-1⅜"	10'-0"	8'-2"	0'-1⅜"	5	9'-4"	2'-6"	0'-1¾"	11'-8"	4'-10"	0'-1¾"
Z	4	44'-3"	6	8'-2"	6'-0"	0'-1½"	10'-5"	8'-3"	0'-1½"	5	9'-10"	2'-5"	0'-2"	12'-2"	4'-9"	0'-2"
AA	4	45'-4"	6	8'-6"	6'-0"	0'-1½"	10'-9"	8'-3"	0'-1½"	5	10'-4"	2'-5"	0'-2"	12'-8"	4'-9"	0'-2"
BB	4	46'-10"	6	8'-6"	6'-0"	0'-1½"	10'-9"	8'-4"	0'-1½"	5	10'-4"	2'-6"	0'-2"	12'-8"	4'-10"	0'-2"
CC	4	48'-6"	6	9'-1"	6'-2"	0'-1⅝"	11'-4"	8'-5"	0'-1⅝"	5	11'-4"	2'-5"	0'-2⅛"	13'-8"	4'-9"	0'-2⅛"
DD	4	50'-2"	6	9'-9"	6'-3"	0'-1¾"	12'-0"	8'-6"	0'-1¾"	5	12'-4"	2'-6"	0'-2⅜"	14'-8"	4'-10"	0'-2⅜"
EE	4	51'-7"	7	9'-10"	6'-2"	0'-1⅝"	12'-0"	8'-4"	0'-1⅝"	5	12'-4"	2'-5"	0'-2¼"	14'-8"	4'-9"	0'-2¼"

A COPY OF THE ORIGINAL SEALED AND SIGNED DRAWING IS ON FILE IN THE CENTRAL OFFICE

VDOT
ROAD AND BRIDGE STANDARDS

SHEET 5 OF 8 | REVISION DATE
1007.13 | 07/12

WING DETAILS

2:1 FILL SLOPE - TYPE II

VIRGINIA DEPARTMENT OF TRANSPORTATION

SPECIFICATION REFERENCE

WING	WF7							WF8		WF9		WF10		WF11			
	SIZE	a			LENGTH			SIZE	LENGTH	SIZE	LENGTH	SIZE	LENGTH	SIZE	a	LENGTH	• Ea
		FROM	TO	VARY BY	FROM	TO	VARY BY										
A	-	-	-	-	-	-	-	4	8'-2"	4	3'-2"	4	2'-2"	4	2'-2"	4'-2"	4
B	-	-	-	-	-	-	-	4	9'-8"	4	3'-2"	4	2'-2"	4	2'-2"	4'-2"	4
C	-	-	-	-	-	-	-	4	10'-8"	4	3'-2"	4	2'-2"	4	2'-2"	4'-2"	4
D	-	-	-	-	-	-	-	4	12'-2"	4	3'-2"	4	2'-2"	4	2'-2"	4'-2"	4
E	-	-	-	-	-	-	-	4	13'-8"	4	3'-8"	4	2'-2"	4	2'-2"	4'-2"	4
F	-	-	-	-	-	-	-	4	15'-2"	4	3'-8"	4	2'-2"	4	2'-2"	4'-2"	4
G	-	-	-	-	-	-	-	4	16'-8"	4	4'-2"	4	2'-2"	4	2'-2"	4'-2"	4
H	-	-	-	-	-	-	-	4	18'-2"	4	4'-2"	4	2'-2"	4	2'-2"	4'-2"	4
I	-	-	-	-	-	-	-	4	19'-2"	4	4'-8"	4	2'-2"	4	2'-2"	4'-2"	4
J	-	-	-	-	-	-	-	4	20'-8"	4	4'-8"	4	2'-2"	4	2'-2"	4'-2"	4
K	-	-	-	-	-	-	-	4	22'-2"	4	5'-2"	4	2'-2"	4	2'-2"	4'-2"	4
L	-	-	-	-	-	-	-	4	23'-8"	4	5'-2"	4	2'-2"	4	2'-2"	4'-2"	4
M	-	-	-	-	-	-	-	4	25'-2"	4	5'-8"	4	2'-2"	4	2'-2"	4'-2"	4
N	-	-	-	-	-	-	-	4	26'-8"	4	5'-8"	4	2'-2"	4	2'-2"	4'-2"	4
O	-	-	-	-	-	-	-	4	27'-8"	4	6'-2"	4	2'-2"	4	2'-2"	4'-2"	4
P	-	-	-	-	-	-	-	4	29'-2"	4	6'-8"	4	2'-2"	4	2'-2"	4'-2"	4
Q	-	-	-	-	-	-	-	4	30'-8"	4	6'-8"	4	2'-2"	4	2'-2"	4'-2"	4
R	5	6'-11"	6'-1"	0'-0¾"	8'-2"	7'-5"	0'-0¾"	4	32'-2"	4	6'-8"	4	2'-2"	4	2'-2"	4'-2"	4
S	6	7'-5"	6'-4"	0'-0¾"	8'-8"	7'-7"	0'-0¾"	4	33'-8"	4	7'-2"	4	2'-2"	4	2'-2"	4'-2"	4
T	6	7'-5"	6'-2"	0'-0¾"	8'-8"	7'-6"	0'-0¾"	4	35'-2"	4	7'-2"	4	2'-2"	4	2'-2"	4'-2"	4
U	6	7'-11"	6'-8"	0'-0¾"	9'-2"	8'-0"	0'-0¾"	4	36'-2"	4	7'-8"	4	2'-2"	4	2'-2"	4'-2"	4
V	6	8'-5"	7'-1"	0'-0¾"	9'-8"	8'-4"	0'-0¾"	4	37'-8"	4	8'-2"	4	2'-2"	4	2'-2"	4'-2"	4
W	6	8'-11"	7'-6"	0'-0¾"	10'-8"	9'-3"	0'-0¾"	4	39'-2"	4	8'-8"	4	2'-2"	4	2'-2"	4'-2"	4
X	6	9'-4"	7'-9"	0'-1"	11'-8"	10'-1"	0'-1"	4	40'-8"	4	9'-2"	4	2'-2"	4	2'-2"	4'-2"	4
Y	7	9'-5"	7'-10"	0'-0¾"	11'-7"	10'-1"	0'-0¾"	4	42'-2"	4	9'-2"	4	2'-2"	4	2'-2"	4'-2"	4
Z	7	9'-10"	8'-3"	0'-1"	12'-1"	10'-6"	0'-1"	4	43'-8"	4	9'-8"	4	2'-2"	4	2'-2"	4'-2"	4
AA	7	10'-4"	8'-7"	0'-1"	12'-7"	10'-10"	0'-1"	4	44'-8"	4	10'-2"	4	2'-2"	4	2'-2"	4'-2"	4
BB	7	10'-4"	8'-7"	0'-1"	12'-7"	10'-10"	0'-1"	4	46'-2"	4	10'-2"	4	2'-2"	4	2'-2"	4'-2"	4
CC	7	11'-4"	9'-3"	0'-1"	13'-7"	11'-5"	0'-1"	4	47'-8"	4	11'-2"	4	2'-2"	4	2'-2"	4'-2"	4
DD	7	12'-4"	9'-10"	0'-1⅛"	14'-7"	12'-1"	0'-1⅛"	4	49'-2"	4	12'-2"	4	2'-2"	4	2'-2"	4'-2"	4
EE	7	12'-4"	9'-11"	0'-1⅛"	14'-7"	12'-2"	0'-1⅛"	4	50'-8"	4	12'-2"	4	2'-2"	4	2'-2"	4'-2"	4

A COPY OF THE ORIGINAL SEALED AND SIGNED DRAWING IS ON FILE IN THE CENTRAL OFFICE

SPECIFICATION REFERENCE

WING DETAILS

2:1 FILL SLOPE - TYPE II

VIRGINIA DEPARTMENT OF TRANSPORTATION

VDOT

ROAD AND BRIDGE STANDARDS

REVISION DATE 07/12

SHEET 6 OF 8

1007.14

BCW-22

WING	STEM BAR SPACINGS												WV1						WV2			
	WV1		WV2		WV3		WV4		WH1		WH2		SIZE	a			LENGTH			SIZE	LENGTH		
	O	P	Q	R	S	T	U	V	W	X	Y	Z		FROM	TO	VARY BY	FROM	TO	VARY BY		FROM	TO	VARY BY
A	8	8'-0"	6	7'-6"	-	-	-	-	-	-	1	1'-3"	4	4'-11"	2'-3"	0'-4"	6'-10"	4'-1"	0'-4"	4	4'-11"	2'-5"	0'-5"
B	10	10'-0"	8	10'-0"	-	-	-	-	1	0'-6"	1	1'-3"	4	5'-5"	2'-1"	0'-4"	7'-4"	3'-11"	0'-4"	4	5'-5"	2'-1"	0'-5"
C	11	11'-0"	8	10'-0"	-	-	-	-	-	-	2	2'-6"	4	5'-11"	2'-1"	0'-4 1/8"	7'-10"	4'-0"	0'-4 1/8"	4	5'-11"	2'-5"	0'-5 1/4"
D	12	12'-0"	10	12'-6"	-	-	-	-	-	-	2	2'-6"	4	6'-5"	2'-3"	0'-4 1/8"	8'-4"	4'-2"	0'-4 1/8"	4	6'-5"	2'-1"	0'-5 1/8"
E	14	14'-0"	11	13'-9"	-	-	-	-	-	-	3	3'-9"	4	6'-11"	2'-1"	0'-4 1/8"	8'-10"	4'-0"	0'-4 1/8"	4	6'-11"	2'-2"	0'-5 1/8"
F	15	15'-0"	12	15'-0"	-	-	-	-	-	-	3	3'-9"	4	7'-5"	2'-3"	0'-4 1/8"	9'-4"	4'-2"	0'-4 1/8"	4	7'-5"	2'-3"	0'-5 1/8"
G	17	17'-0"	13	16'-3"	-	-	-	-	1	0'-6"	3	3'-9"	4	7'-11"	2'-1"	0'-4 1/8"	9'-10"	4'-0"	0'-4 1/8"	4	7'-11"	2'-4"	0'-5 1/8"
H	18	18'-0"	14	17'-6"	-	-	-	-	-	-	4	5'-0"	4	8'-5"	2'-3"	0'-4"	10'-4"	4'-2"	0'-4"	4	8'-5"	2'-5"	0'-5 1/8"
I	12	12'-0"	15	18'-9"	8	6'-0"	-	-	-	-	4	5'-0"	4	6'-5"	2'-3"	0'-4 1/8"	8'-4"	4'-2"	0'-4 1/8"	4	8'-11"	2'-4"	0'-5 1/4"
J	12	12'-0"	16	20'-0"	10	7'-6"	-	-	-	-	5	6'-3"	4	6'-5"	2'-3"	0'-4 1/8"	8'-4"	4'-2"	0'-4 1/8"	4	9'-5"	2'-5"	0'-5 1/4"
K	13	13'-0"	18	22'-6"	11	8'-3"	-	-	-	-	5	6'-3"	4	6'-8"	2'-2"	0'-4 1/8"	8'-7"	4'-1"	0'-4 1/8"	4	9'-11"	2'-1"	0'-5 1/8"
L	14	14'-0"	19	23'-9"	12	9'-0"	-	-	1	0'-6"	5	6'-3"	4	6'-11"	2'-1"	0'-4 1/8"	8'-10"	4'-0"	0'-4 1/8"	4	10'-5"	2'-2"	0'-5 1/8"
M	15	15'-0"	20	25'-0"	12	9'-0"	-	-	-	-	6	7'-6"	4	7'-5"	2'-3"	0'-4 1/8"	9'-4"	4'-2"	0'-4 1/8"	4	10'-11"	2'-3"	0'-5 1/8"
N	16	16'-0"	21	26'-3"	13	9'-9"	-	-	-	-	6	7'-6"	5	7'-8"	2'-2"	0'-4 1/8"	9'-8"	4'-1"	0'-4 1/8"	4	11'-5"	2'-4"	0'-5 1/8"
O	17	17'-0"	22	27'-6"	13	9'-9"	-	-	-	-	7	8'-9"	5	8'-2"	2'-2"	0'-4 1/8"	10'-1"	4'-1"	0'-4 1/8"	4	11'-11"	2'-3"	0'-5 1/4"
P	18	18'-0"	23	28'-9"	14	10'-6"	-	-	-	-	7	8'-9"	5	8'-5"	2'-1"	0'-4 1/8"	10'-4"	4'-0"	0'-4 1/8"	4	12'-5"	2'-4"	0'-5 1/4"
Q	18	18'-0"	24	30'-0"	16	12'-0"	-	-	1	0'-6"	7	8'-9"	5	8'-4"	2'-1"	0'-4 1/8"	10'-4"	4'-0"	0'-4 1/8"	4	12'-11"	2'-5"	0'-5 1/4"
R	15	15'-0"	26	32'-6"	13	9'-9"	12	6'-0"	-	-	8	10'-0"	4	7'-4"	2'-1"	0'-4 1/8"	9'-2"	4'-0"	0'-4 1/8"	4	13'-5"	2'-1"	0'-5 1/8"
S	15	15'-0"	27	33'-9"	13	9'-9"	15	7'-6"	-	-	8	10'-0"	4	7'-4"	2'-1"	0'-4 1/8"	9'-2"	4'-0"	0'-4 1/8"	4	13'-11"	2'-2"	0'-5 1/8"
T	14	14'-0"	28	35'-0"	15	11'-3"	17	8'-6"	-	-	9	11'-3"	4	6'-11"	2'-1"	0'-4 1/8"	8'-10"	4'-0"	0'-4 1/8"	4	14'-5"	2'-3"	0'-5 1/8"
U	14	14'-0"	29	36'-3"	17	12'-9"	16	8'-0"	-	-	9	11'-3"	4	7'-0"	2'-1"	0'-4 1/8"	8'-11"	4'-0"	0'-4 1/8"	4	14'-11"	2'-2"	0'-5 1/4"
V	15	15'-0"	30	37'-6"	17	12'-9"	17	8'-6"	1	0'-6"	9	11'-3"	4	7'-4"	2'-1"	0'-4 1/8"	9'-3"	4'-0"	0'-4 1/8"	4	15'-5"	2'-3"	0'-5 1/4"
W	15	15'-0"	31	38'-9"	19	14'-3"	17	8'-6"	-	-	10	12'-6"	4	7'-7"	2'-4"	0'-4 1/8"	9'-6"	4'-3"	0'-4 1/8"	4	16'-2"	2'-7"	0'-5 1/4"
X	17	17'-0"	32	40'-0"	17	12'-9"	19	9'-6"	-	-	10	12'-6"	4	8'-6"	2'-7"	0'-4 1/8"	10'-5"	4'-6"	0'-4 1/8"	4	16'-11"	2'-11"	0'-5 1/4"
Y	20	20'-0"	34	42'-6"	15	11'-3"	19	9'-6"	-	-	11	13'-9"	4	9'-7"	2'-7"	0'-4 1/8"	11'-5"	4'-6"	0'-4 1/8"	4	17'-5"	2'-7"	0'-5 1/8"
Z	20	20'-0"	35	43'-9"	17	12'-9"	19	9'-6"	-	-	11	13'-9"	4	9'-7"	2'-7"	0'-4 1/8"	11'-5"	4'-6"	0'-4 1/8"	4	17'-11"	2'-8"	0'-5 1/8"
AA	19	19'-0"	36	45'-0"	19	14'-3"	20	10'-0"	1	0'-6"	11	13'-9"	4	9'-3"	2'-7"	0'-4 1/8"	11'-2"	4'-6"	0'-4 1/8"	4	18'-5"	2'-7"	0'-5 1/4"
BB	20	20'-0"	37	46'-3"	19	14'-3"	21	10'-6"	-	-	12	15'-0"	4	9'-7"	2'-7"	0'-4 1/8"	11'-6"	4'-6"	0'-4 1/8"	4	18'-11"	2'-8"	0'-5 1/4"
CC	19	19'-0"	38	47'-6"	21	15'-9"	23	11'-6"	-	-	12	15'-0"	4	9'-3"	2'-7"	0'-4 1/8"	11'-2"	4'-6"	0'-4 1/8"	4	19'-5"	2'-9"	0'-5 1/4"
DD	18	18'-0"	39	48'-9"	23	17'-3"	25	12'-6"	-	-	13	16'-3"	4	8'-10"	2'-7"	0'-4 1/8"	10'-9"	4'-6"	0'-4 1/8"	4	19'-11"	2'-10"	0'-5 1/4"
EE	18	18'-0"	40	50'-0"	25	18'-9"	25	12'-6"	-	-	13	16'-3"	4	8'-10"	2'-7"	0'-4 1/8"	10'-9"	4'-6"	0'-4 1/8"	4	20'-5"	2'-11"	0'-5 1/4"

A COPY OF THE ORIGINAL SEALED AND SIGNED DRAWING IS ON FILE IN THE CENTRAL OFFICE

VDOT
ROAD AND BRIDGE STANDARDS

SHEET 7 OF 8 | REVISION DATE
1007.15 | 07/12

WING DETAILS

2:1 FILL SLOPE - TYPE II

VIRGINIA DEPARTMENT OF TRANSPORTATION

SPECIFICATION REFERENCE

BCW-22

WING	WV3							WV4							WH1			WH2					WH3	
	SIZE	a			LENGTH			SIZE	a			LENGTH			SIZE	LENGTH	• Ea	SIZE	LENGTH			• EA	SIZE	LENGTH
		FROM	TO	VARY BY	FROM	TO	VARY BY		FROM	TO	VARY BY	FROM	TO	VARY BY					FROM	TO	VARY BY			
A	-	-	-	-	-	-	-	-	-	-	-	-	-	-	4	8'-6"	2	4	6'-6"	2'-10"	3'-7½"	2	4	9'-0"
B	-	-	-	-	-	-	-	-	-	-	-	-	-	-	4	10'-0"	2	4	6'-7"	2'-10"	3'-8⅜"	2	4	10'-7"
C	-	-	-	-	-	-	-	-	-	-	-	-	-	-	4	11'-0"	2	4	9'-10"	2'-9"	3'-6⅜"	2	4	11'-7"
D	-	-	-	-	-	-	-	-	-	-	-	-	-	-	4	12'-6"	2	4	9'-10"	2'-9"	3'-6¼"	2	4	13'-3"
E	-	-	-	-	-	-	-	-	-	-	-	-	-	-	4	14'-0"	2	4	13'-6"	2'-9"	3'-6¾"	2	4	14'-10"
F	-	-	-	-	-	-	-	-	-	-	-	-	-	-	4	15'-6"	2	4	13'-7"	2'-10"	3'-7"	2	4	16'-5"
G	-	-	-	-	-	-	-	-	-	-	-	-	-	-	4	17'-0"	2	4	13'-7"	2'-10"	3'-7"	2	4	18'-0"
H	-	-	-	-	-	-	-	-	-	-	-	-	-	-	4	18'-6"	2	4	17'-3"	2'-10"	3'-7¼"	2	4	19'-6"
I	4	8'-11"	6'-10"	0'-3⅛"	10'-10"	8'-8"	0'-3⅛"	-	-	-	-	-	-	-	4	19'-6"	2	4	16'-11"	2'-9"	3'-6⅜"	2	4	20'-8"
J	4	9'-5"	6'-9"	0'-3⅛"	11'-4"	8'-8"	0'-3⅛"	-	-	-	-	-	-	-	4	21'-0"	2	4	20'-6"	2'-9"	3'-6½"	2	4	22'-3"
K	5	9'-11"	7'-0"	0'-3⅛"	11'-10"	9'-0"	0'-3⅛"	-	-	-	-	-	-	-	4	22'-6"	2	4	20'-6"	2'-9"	3'-6⅝"	2	4	23'-9"
L	5	10'-5"	7'-3"	0'-3⅛"	12'-4"	9'-3"	0'-3⅛"	-	-	-	-	-	-	-	4	24'-0"	2	4	20'-8"	2'-9"	3'-6⅞"	2	4	25'-5"
M	6	10'-11"	7'-10"	0'-3"	12'-11"	9'-10"	0'-3"	-	-	-	-	-	-	-	4	25'-6"	2	4	24'-3"	2'-9"	3'-6⅞"	2	4	27'-0"
N	6	11'-5"	8'-0"	0'-3"	13'-5"	10'-1"	0'-3"	-	-	-	-	-	-	-	4	27'-0"	2	4	24'-3"	2'-0"	3'-7"	2	4	28'-6"
O	6	11'-11"	8'-6"	0'-3⅛"	13'-11"	10'-6"	0'-3⅛"	-	-	-	-	-	-	-	4	28'-0"	2	4	27'-6"	2'-9"	3'-6⅜"	2	4	29'-8"
P	6	12'-5"	8'-9"	0'-3⅛"	14'-5"	10'-9"	0'-3⅛"	-	-	-	-	-	-	-	4	29'-6"	2	4	27'-6"	2'-9"	3'-6½"	2	4	31'-3"
Q	7	12'-11"	8'-9"	0'-3⅛"	15'-0"	10'-10"	0'-3⅛"	-	-	-	-	-	-	-	4	31'-0"	2	4	27'-8"	2'-9"	3'-6⅝"	2	4	32'-10"
R	6	11'-1"	7'-8"	0'-3⅛"	13'-1"	9'-8"	0'-3⅛"	6	13'-5"	11'-4"	0'-2"	15'-5"	13'-4"	0'-2"	4	32'-6"	2	4	31'-3"	2'-10"	3'-6⅝"	2	4	34'-4"
S	6	11'-0"	7'-8"	0'-3⅛"	13'-1"	9'-8"	0'-3⅛"	6	13'-11"	11'-4"	0'-2"	15'-11"	13'-4"	0'-2"	4	34'-0"	2	4	31'-3"	2'-10"	3'-6¾"	2	4	36'-0"
T	6	11'-2"	7'-3"	0'-3⅛"	13'-3"	9'-4"	0'-3⅛"	6	14'-5"	11'-6"	0'-2"	16'-5"	13'-6"	0'-2"	4	35'-6"	2	4	35'-0"	2'-10"	3'-6⅞"	2	4	37'-7"
U	6	11'-10"	7'-4"	0'-3⅛"	13'-10"	9'-5"	0'-3⅛"	7	14'-11"	12'-1"	0'-2"	17'-0"	14'-3"	0'-2"	4	36'-6"	2	4	34'-7"	2'-9"	3'-6⅜"	2	4	38'-9"
V	6	12'-2"	7'-8"	0'-3⅛"	14'-2"	9'-9"	0'-3⅛"	7	15'-5"	12'-5"	0'-2"	17'-6"	14'-7"	0'-2"	4	38'-0"	2	4	34'-7"	2'-9"	3'-6½"	2	4	40'-4"
W	6	12'-11"	7'-11"	0'-3⅛"	14'-11"	9'-11"	0'-3⅛"	7	16'-2"	13'-2"	0'-2"	18'-3"	15'-4"	0'-2"	4	39'-6"	2	4	38'-3"	2'-10"	3'-6½"	2	4	41'-11"
X	6	13'-4"	8'-10"	0'-3⅛"	15'-4"	10'-11"	0'-3⅛"	7	16'-11"	13'-7"	0'-2"	19'-0"	15'-9"	0'-2"	4	41'-0"	2	4	38'-4"	2'-9"	3'-6⅝"	2	4	43'-6"
Y	7	13'-10"	9'-11"	0'-3⅛"	15'-11"	12'-0"	0'-3⅛"	7	17'-5"	14'-1"	0'-2"	19'-6"	16'-3"	0'-2"	4	42'-6"	2	4	42'-0"	2'-9"	3'-6¾"	2	4	45'-0"
Z	7	14'-4"	9'-11"	0'-3⅛"	16'-6"	12'-0"	0'-3⅛"	7	17'-11"	14'-7"	0'-2"	20'-0"	16'-9"	0'-2"	4	44'-0"	2	4	42'-1"	2'-9"	3'-6⅞"	2	4	46'-7"
AA	7	14'-8"	9'-7"	0'-3⅛"	16'-9"	11'-9"	0'-3⅛"	7	18'-5"	14'-11"	0'-2"	20'-6"	17'-0"	0'-2"	4	45'-0"	2	4	41'-7"	2'-9"	3'-6⅜"	2	4	47'-9"
BB	7	15'-0"	9'-11"	0'-3⅛"	17'-1"	12'-1"	0'-3⅛"	8	18'-11"	15'-3"	0'-2"	21'-1"	17'-5"	0'-2"	4	46'-6"	2	4	45'-3"	2'-9"	3'-6½"	2	4	49'-4"
CC	7	15'-1"	9'-7"	0'-3⅛"	17'-3"	11'-8"	0'-3⅛"	8	19'-5"	15'-5"	0'-2"	21'-7"	17'-7"	0'-2"	4	48'-0"	2	4	45'-4"	2'-10"	3'-6½"	2	4	50'-11"
DD	7	15'-3"	9'-3"	0'-3⅛"	17'-5"	11'-4"	0'-3⅛"	8	19'-11"	15'-6"	0'-2"	22'-1"	17'-9"	0'-2"	4	49'-6"	2	4	49'-0"	2'-9"	3'-6⅝"	2	4	52'-6"
EE	7	15'-9"	9'-3"	0'-3⅛"	17'-11"	11'-4"	0'-3⅛"	9	20'-5"	16'-0"	0'-2"	22'-10"	18'-6"	0'-2"	4	51'-0"	2	4	49'-1"	2'-9"	3'-6¾"	2	4	54'-1"

A COPY OF THE ORIGINAL SEALED AND SIGNED DRAWING IS ON FILE IN THE CENTRAL OFFICE

SPECIFICATION REFERENCE

WING DETAILS

2:1 FILL SLOPE - TYPE II

VIRGINIA DEPARTMENT OF TRANSPORTATION

VDOT

ROAD AND BRIDGE STANDARDS

REVISION DATE 07/12

SHEET 8 OF 8

1007.16

THIS PAGE INTENTIONALLY LEFT BLANK

2016 ROAD & BRIDGE STANDARDS

BCE-01

In case of skewed culverts, wingwalls conflicting with barrel of proposed extension are to be removed.

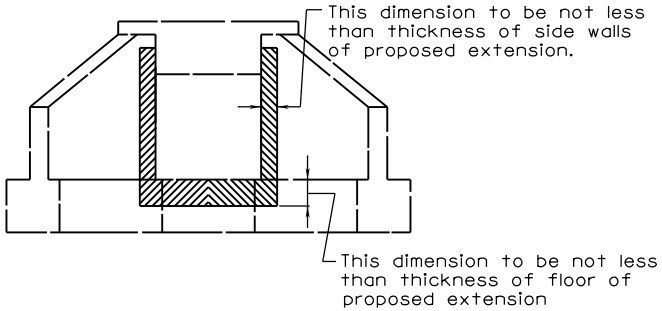

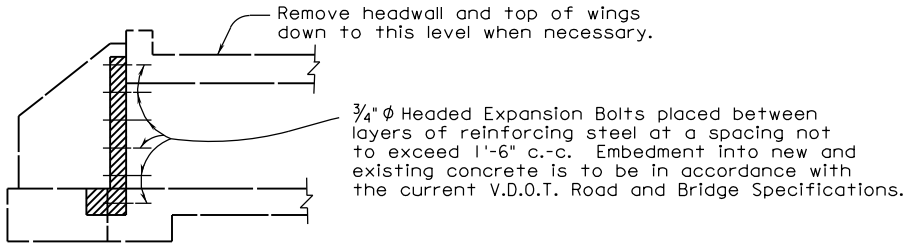

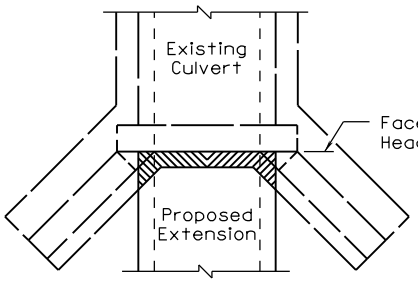

Culverts with pile foundations will require special details.

Notes:

Shaded portion indicates existing concrete to be removed, so that all portions of proposed extension will begin in a vertical plane at face of existing headwall.
Details of proposed extension including headwall for same can be obtained from box culvert standard.
Unit price bid for concrete and reinforcement shall include cost of removal and disposal of old concrete and the furnishing and placing of dowels and expansion bolts required.

SPECIFICATION REFERENCE	DETAILS FOR WIDENING EXISTING BOX CULVERTS MODIFICATIONS TO EXISTING BOX VIRGINIA DEPARTMENT OF TRANSPORTATION	VDOT ROAD AND BRIDGE STANDARDS	
		REVISION DATE 07/11	SHEET 1 OF 4 1008.01

BCE-01

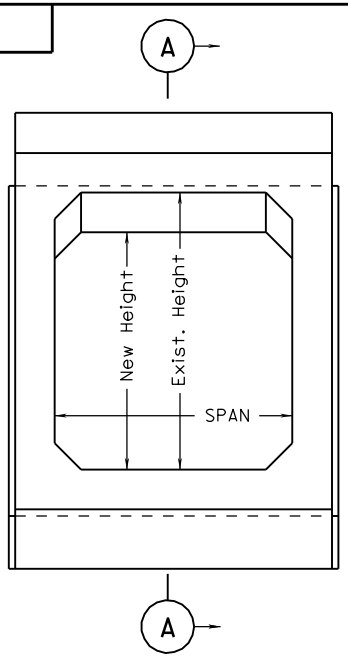

SECTION THRU CULVERT

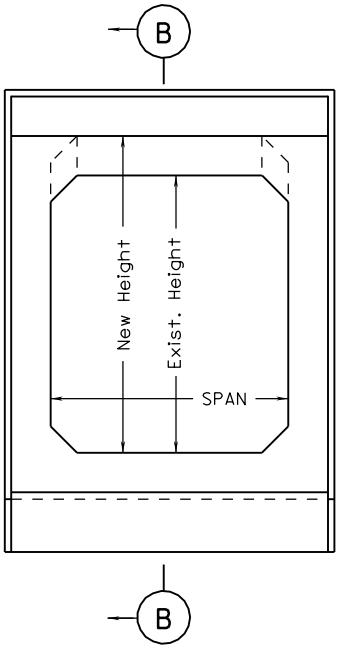

SECTION THRU CULVERT

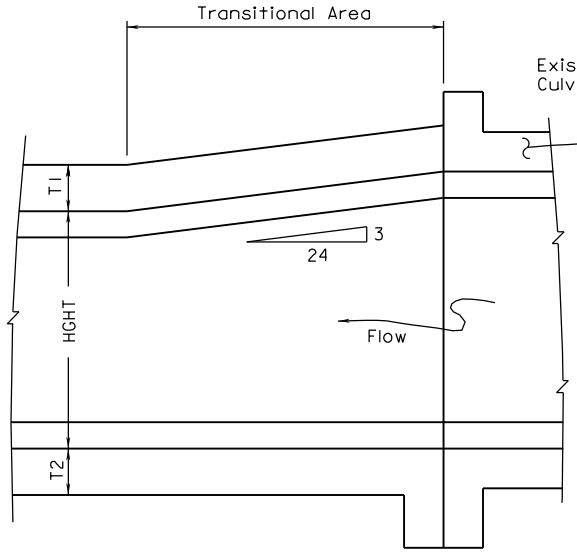

SECTION A-A

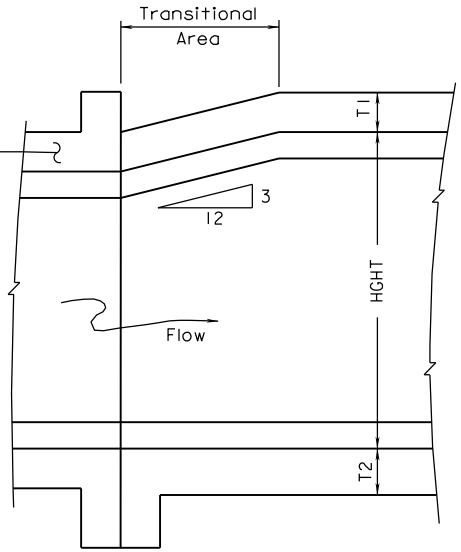

SECTION B-B

Notes:

Adjustments in quantities will be required when a change in height exists as shown in Sections A & B. Quantities of concrete and reinforcing steel shall be increased or decreased accordingly. For cases where only wall thickness changes, there shall be no quantity adjustments.

For SPAN, HGHT, & T dimensions, refer to appropriate Box Culvert Standard. This standard is to be used only when a change in height or wall thickness occurs. It does not apply to changes in SPAN.

VDOT ROAD AND BRIDGE STANDARDS	DETAILS FOR WIDENING EXISTING BOX CULVERTS HEIGHT TRANSITIONS VIRGINIA DEPARTMENT OF TRANSPORTATION	SPECIFICATION REFERENCE	
SHEET 2 OF 4	REVISION DATE 07/11		
1008.02			

BCE-01

For SPAN, HGHT, & T dimensions, refer to appropriate Box Culvert Standard. This standard is to be used only when a change in height or wall thickness occurs. It does not apply to changes in SPAN.

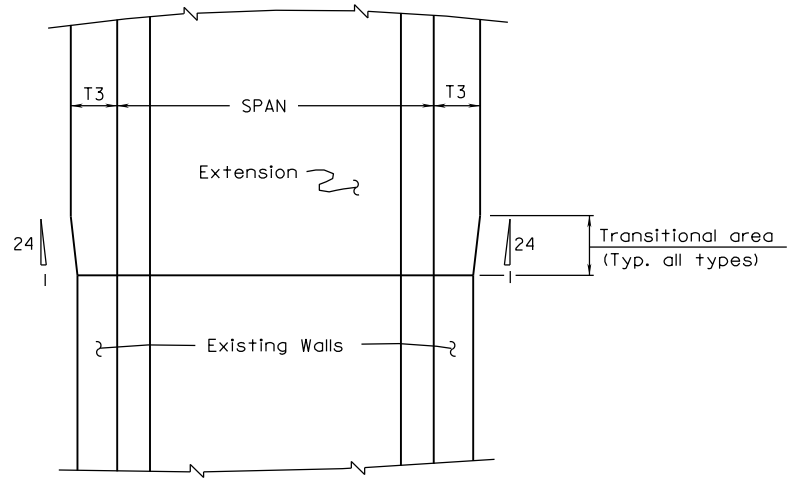

SINGLE BOX CULVERT

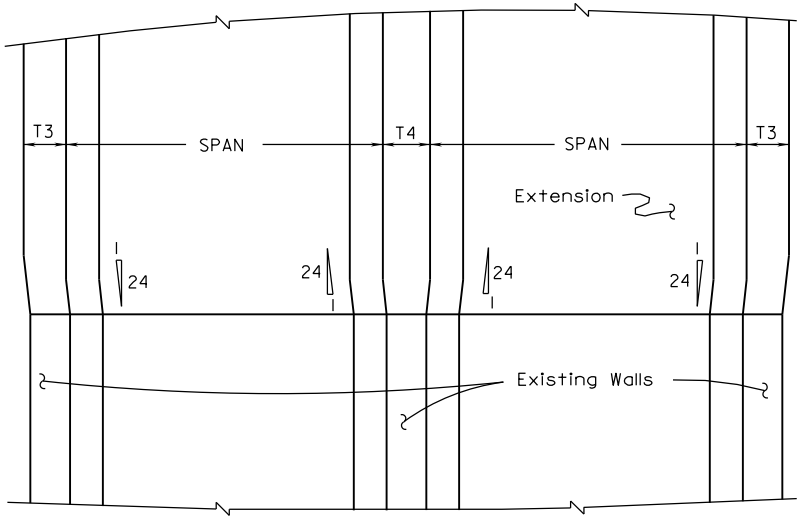

DOUBLE BOX CULVERT

SPECIFICATION REFERENCE	DETAILS FOR WIDENING EXISTING BOX CULVERTS WALL TRANSITIONS VIRGINIA DEPARTMENT OF TRANSPORTATION	VDOT ROAD AND BRIDGE STANDARDS	
		REVISION DATE 07/11	SHEET 3 OF 4 1008.03

BCE-01

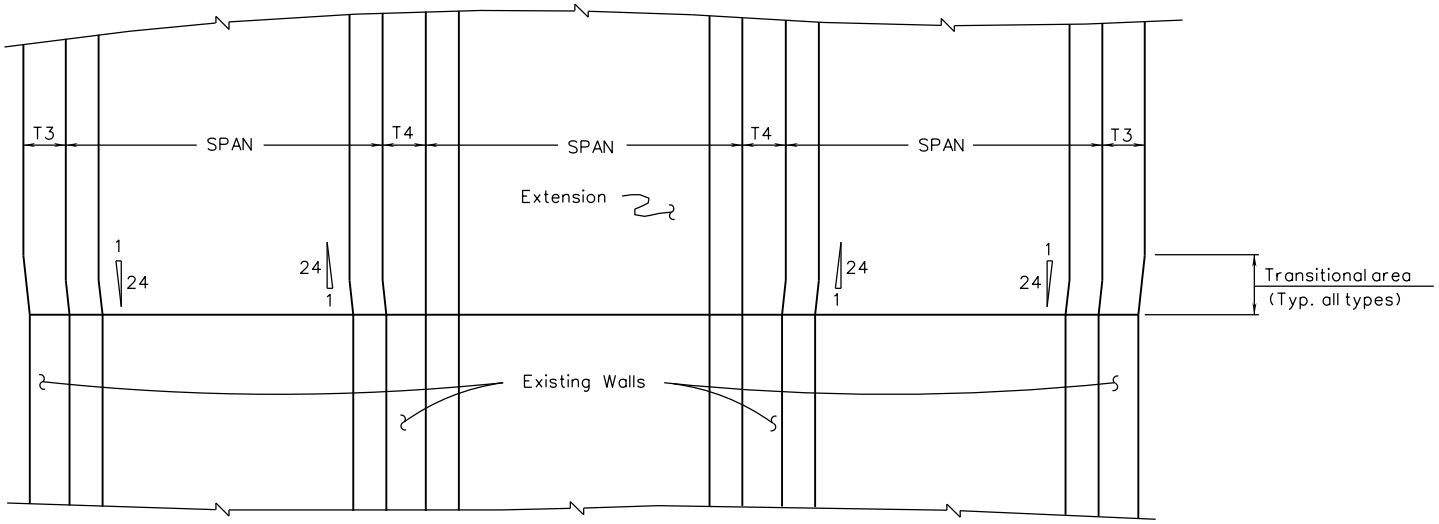

TRIPLE BOX CULVERT

For SPAN, HGHT, & T dimensions, refer to appropriate Box Culvert Standard. This standard is to be used only when a change in height or wall thickness occurs. It does not apply to changes in SPAN.

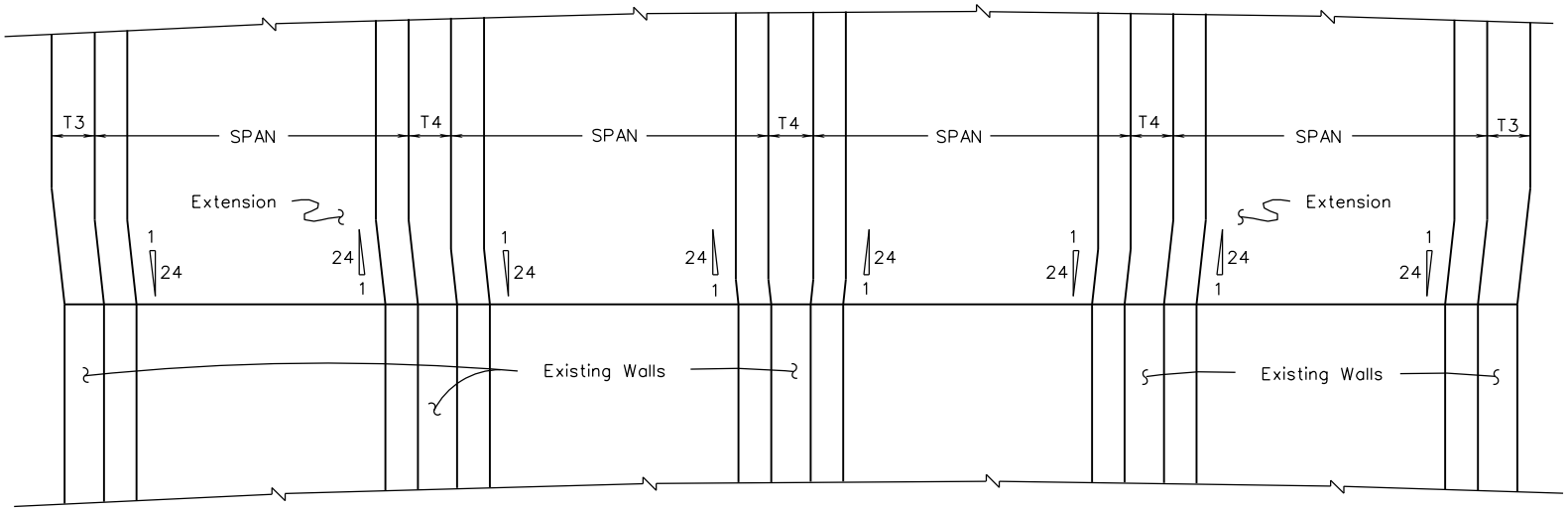

QUADRUPLE BOX CULVERT

VDOT
ROAD AND BRIDGE STANDARDS

SHEET 4 OF 4

1008.04

REVISION DATE
07/11

DETAILS FOR WIDENING EXISTING BOX CULVERTS

WALL TRANSITIONS

VIRGINIA DEPARTMENT OF TRANSPORTATION

SPECIFICATION REFERENCE

SECTION 1100

MISCELLANEOUS
STRUCTURE & BRIDGE STANDARDS

STANDARD

THIS PAGE INTENTIONALLY LEFT BLANK

VDOT
ROAD AND BRIDGE STANDARDS

SHEET 1 OF 1

REVISION DATE

TITLE

VIRGINIA DEPARTMENT OF TRANSPORTATION

SPECIFICATION REFERENCE

STANDARD	TITLE	PAGE
BDP-3	BRIDGE CONSTRUCTION AND WIDENING DATE PLATES	1101.01
	BRIDGE CONSTRUCTION AND WIDENING DATE PLATES	1101.02

INDEX OF SHEETS
SECTION 1100-MISC. STRUCTURE & BRIDGE

VIRGINIA DEPARTMENT OF TRANSPORTATION

VDOT
ROAD AND BRIDGE STANDARDS

REVISION DATE

SHEET 1 OF 1

1100.01

THIS PAGE INTENTIONALLY LEFT BLANK

VDOT ROAD AND BRIDGE STANDARDS			SPECIFICATION REFERENCE
SHEET 1 OF 1	REVISION DATE	VIRGINIA DEPARTMENT OF TRANSPORTATION	
1100.02			

BDP-3

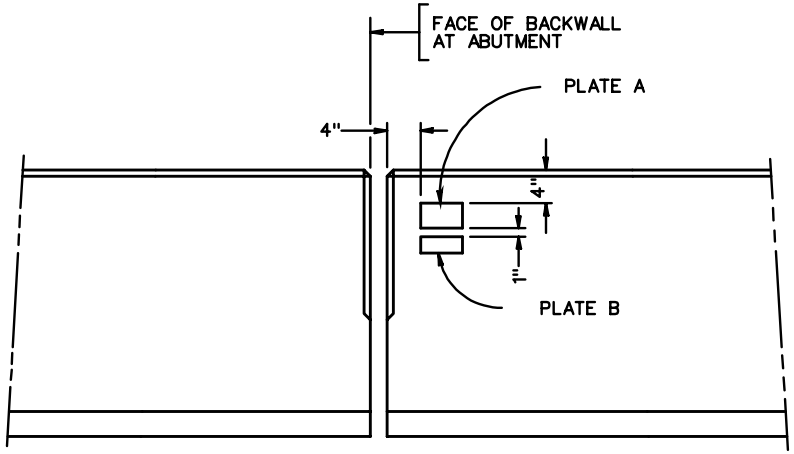

TERMINAL WALL/PARAPET PARAPET

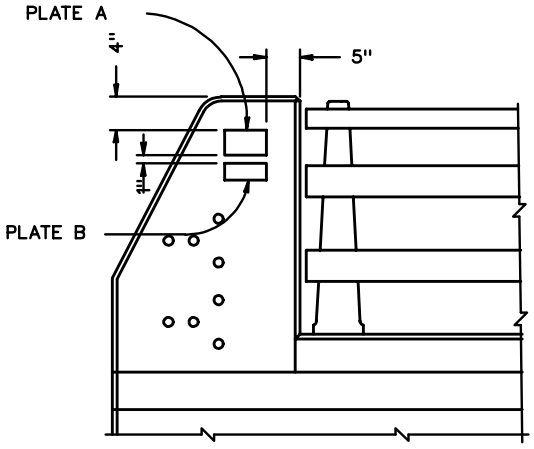

TERMINAL WALL/ALUMINUM RAIL

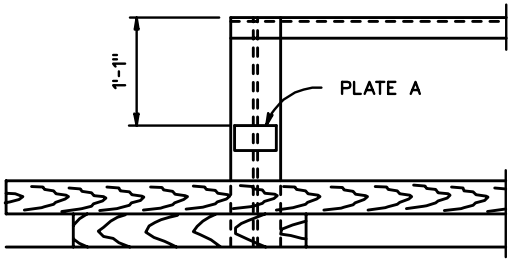

STEEL END POST

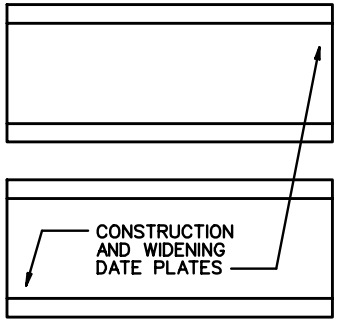

LOCATION SKETCH FOR
TWIN BRIDGE

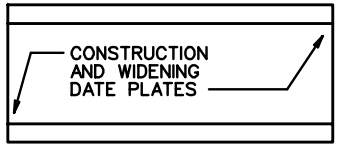

LOCATION SKETCH FOR
SINGLE BRIDGE

SPECIFICATION REFERENCE	BRIDGE CONSTRUCTION AND WIDENING DATE PLATES (PLACEMENT DETAILS) VIRGINIA DEPARTMENT OF TRANSPORTATION	VDOT ROAD AND BRIDGE STANDARDS	
		REVISION DATE	SHEET 1 OF 2
			1101.01

BDP-3

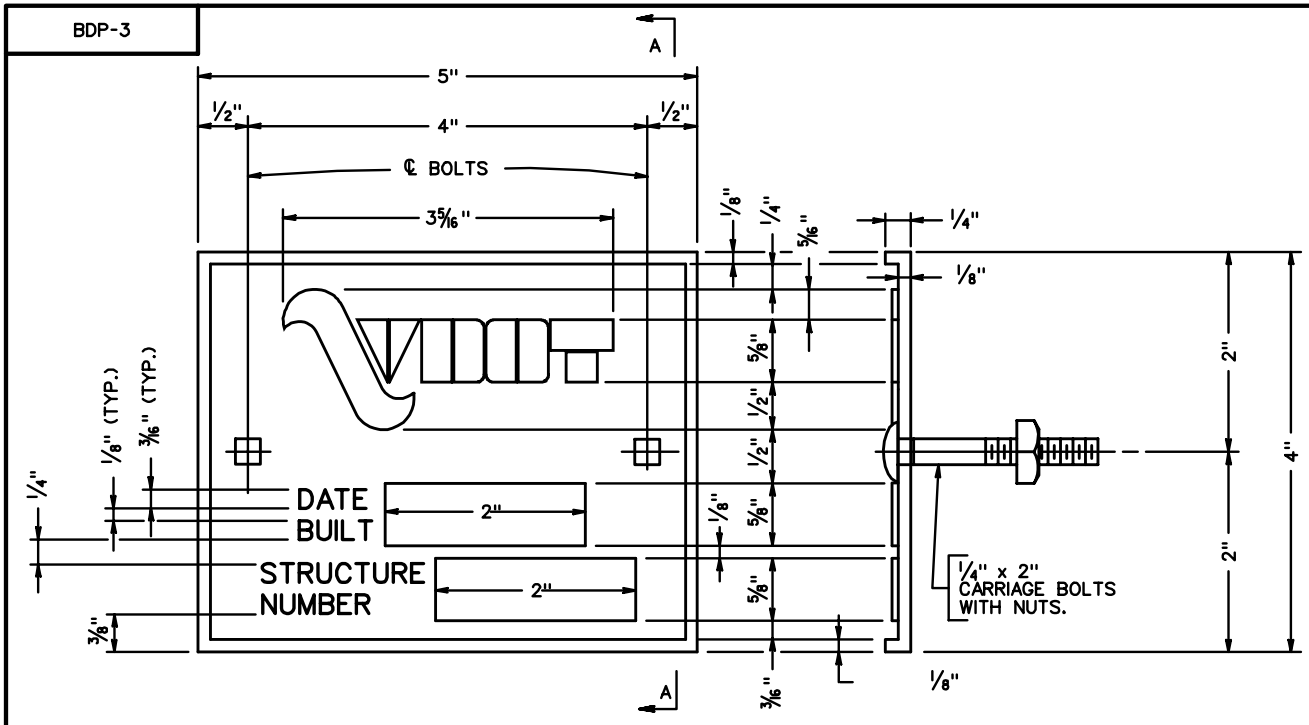

ELEVATION SECTION A-A

PLATE A

SCALE: 1/2" = 1'-0"

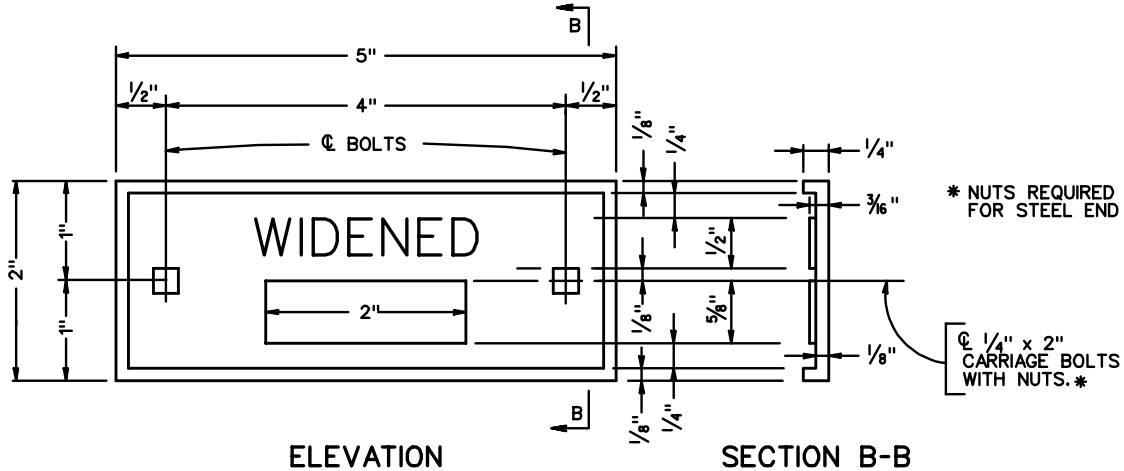

* NUTS REQUIRED ONLY FOR STEEL END POST.

ELEVATION SECTION B-B

PLATE B

SCALE: 1/2" = 1'-0"

NOTES

DATE PLATE A & B SHALL BE BRONZE.

ALL RAISED SURFACES SHALL HAVE A BRIGHT FINISH.

DATE BUILT AND STRUCTURE NUMBER TO BE STAMPED ON PLATED WITH A 1/2" STEEL NUMBERING STAMP BY STATE PERSONNEL.

CARRIAGE BOLTS AND NUTS MAY BE BRONZE OR STAINLESS STEEL.

VDOT ROAD AND BRIDGE STANDARDS	BRIDGE CONSTRUCTION AND WIDENING DATE PLATES (DATE PLATE DETAILS) VIRGINIA DEPARTMENT OF TRANSPORTATION	SPECIFICATION REFERENCE
SHEET 2 OF 2 / REVISION DATE		
1101.02		

SECTION 1200

LANDSCAPE

STANDARD

THIS PAGE INTENTIONALLY LEFT BLANK

VDOT
ROAD AND BRIDGE STANDARDS

SHEET 1 OF 1

REVISION DATE

TITLE

VIRGINIA DEPARTMENT OF TRANSPORTATION

SPECIFICATION REFERENCE

STANDARD	TITLE	PAGE
L-3	BENCH PLANTING ON ROCK CUT SECTION	1201.01
L-3A	HORIZONTAL GROOVING CUT SLOPES	1201.02
L-4	METHOD OF PLANTING FOREST TREE SEEDLINGS	1201.03
L-5	PLANTING DETAILS	1201.04
	PLANTING DETAILS	1201.05
	PLANTING DETAILS (ON SLOPES)	1201.06
L-6	FERTILIZER AND MULCH	1201.07
TW-1	STANDARD TREE WALLS AND TREE WELLS	1201.08
PT-1	PRECAST CONCRETE PICNIC TABLE	1201.09
RW-1	DRY RUBBLE RETAINING WALL	1201.10
RW-1A	MORTAR RUBBLE RETAINING WALL (LEVEL BACKFILL)	1201.11
RW-1B	MORTAR RETAINING WALL (INFINITE SURCHARGE AND DECK SURCHAARGE - LOADED)	1201.12

INDEX OF SHEETS
SECTION 1200-LANDSCAPE

VIRGINIA DEPARTMENT OF TRANSPORTATION

VDOT

ROAD AND BRIDGE STANDARDS

REVISION DATE	SHEET 1 OF 1
	1200.01

THIS PAGE INTENTIONALLY LEFT BLANK

VDOT ROAD AND BRIDGE STANDARDS			SPECIFICATION REFERENCE
SHEET 1 OF 1	REVISION DATE	VIRGINIA DEPARTMENT OF TRANSPORTATION	
1200.02			

L-3

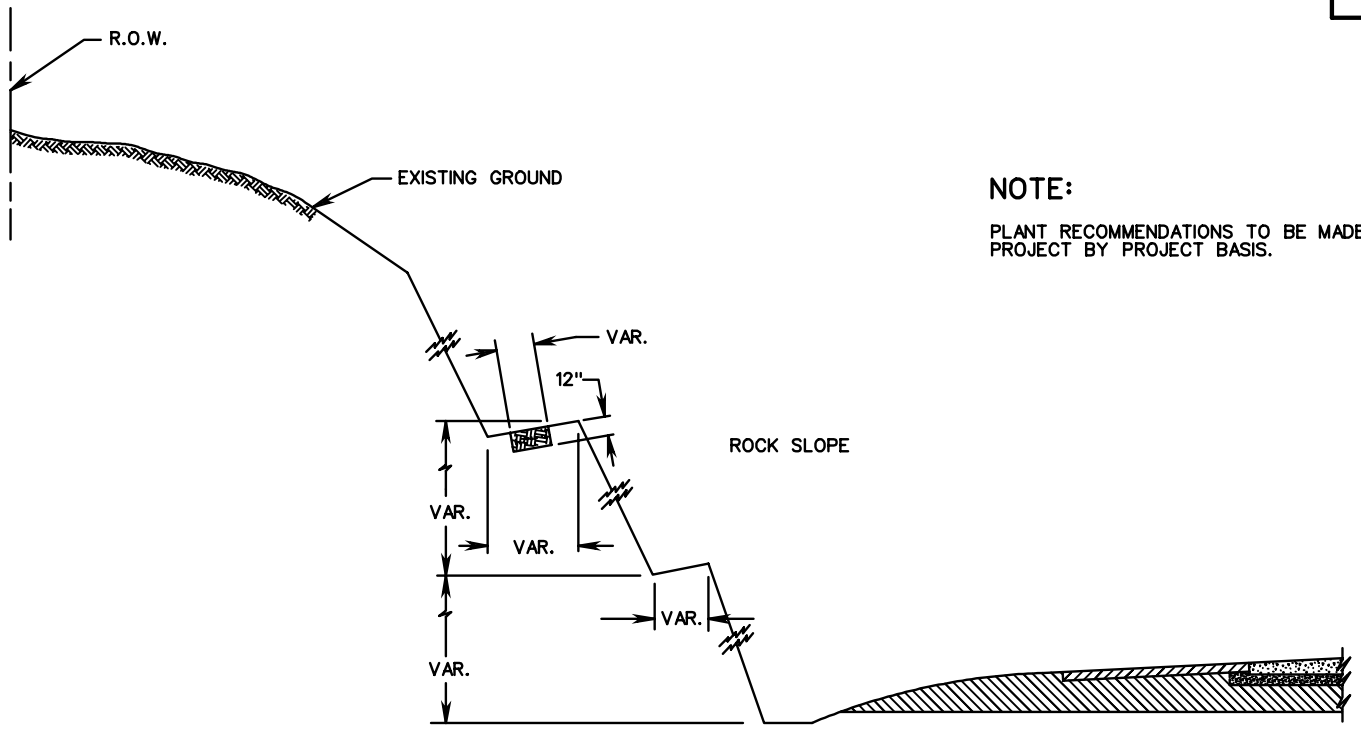

NOTE:

PLANT RECOMMENDATIONS TO BE MADE ON A PROJECT BY PROJECT BASIS.

SECTION A-A

THIS SECTION IS TO BE USED AS A GUIDE ONLY.
EACH ROCK CUT SHOULD RECEIVE INDIVIDUAL INVESTIGATION.

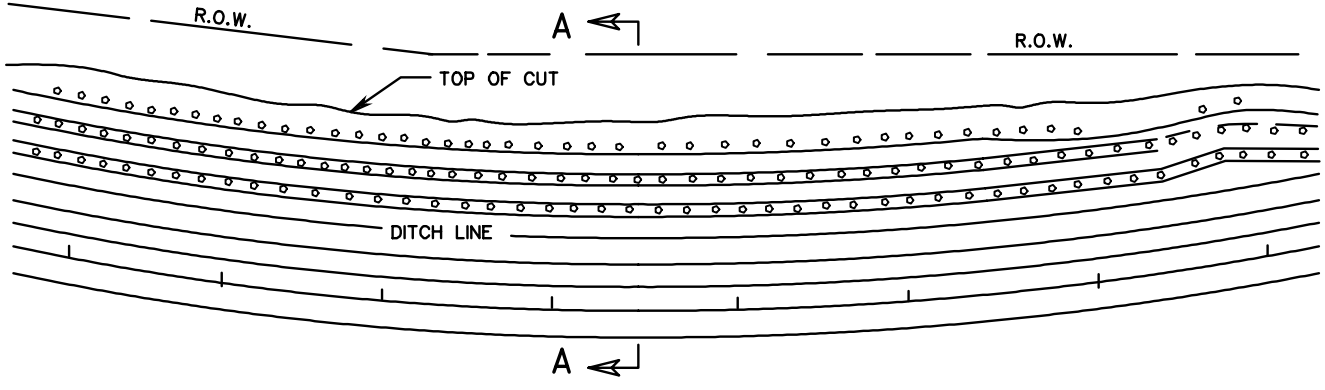

SPECIFICATION REFERENCE	BENCH PLANTING ON ROCK CUT SECTION TYPICAL SECTION VIRGINIA DEPARTMENT OF TRANSPORTATION	VDOT ROAD AND BRIDGE STANDARDS	
NONE		REVISION DATE	SHEET 1 OF 1 1201.01

L-3A

CUT SLOPES STEEPER THAN 2:1 SHALL BE GROOVED IN ACCORDANCE WITH DETAILS SHOWN.

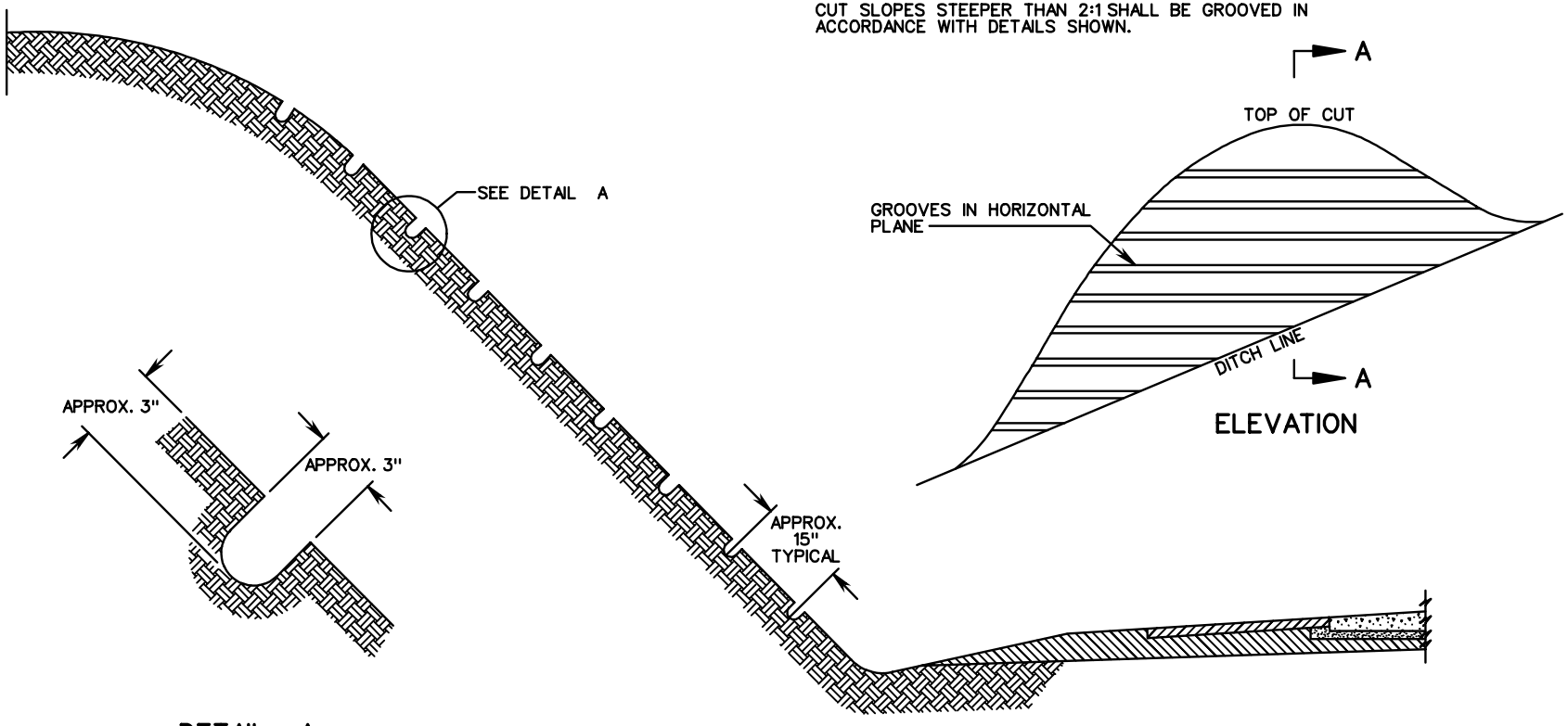

DETAIL A

SECTION A-A

ELEVATION

VDOT ROAD AND BRIDGE STANDARDS		HORIZONTAL GROOVING CUT SLOPES TYPICAL METHOD VIRGINIA DEPARTMENT OF TRANSPORTATION	SPECIFICATION REFERENCE
SHEET 1 OF 1	REVISION DATE		303
1201.02			

L-4

PLANTING WITH BAR

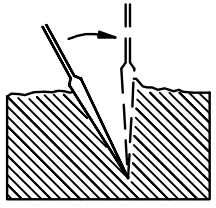

1.
INSERT BAR AT ANGLE SHOWN. PUSH FORWARD TO UPRIGHT POSITION.

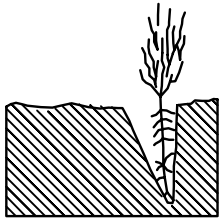

2.
REMOVE BAR. PLACE SEEDLING AT CORRECT DEPTH.

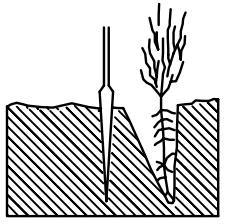

3.
INSERT BAR 2 INCHES TOWARD PLANTER FROM SEEDLING.

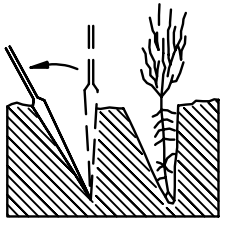

4.
PULL HANDLE OF BAR TOWARD PLANTER FIRMING SOIL AT BOTTOM OF ROOTS.

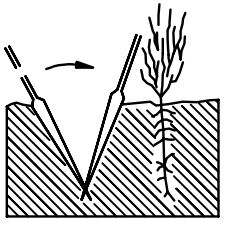

5.
PUSH HANDLE OF BAR FORWARD FROM PLANTER FIRMING SOIL AT TOP OF ROOTS.

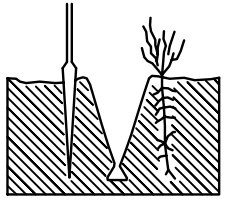

6.
INSERT BAR 2 INCHES FROM LAST HOLE.

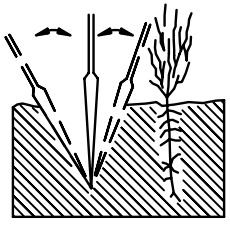

7.
PUSH FORWARD THEN PULL BACKWARD FILLING HOLE.

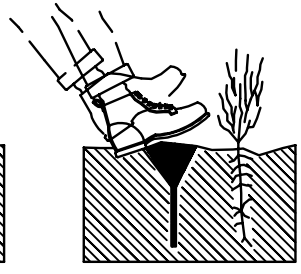

8.
FILL IN LAST HOLE BY STAMPING WITH THE FEET.

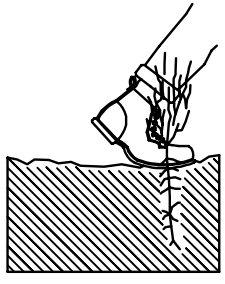

9.
FIRM SOIL AROUND SEEDLING WITH THE FEET.

PLANTING WITH MATTOCK

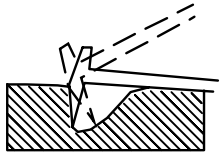

1.
INSERT MATTOCK. LIFT HANDLE AND PULL.

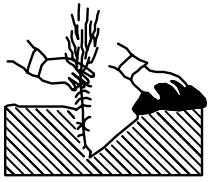

2.
PLACE SEEDLING ALONG STRAIGHT SIDE AT CORRECT DEPTH.

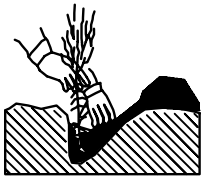

3.
FILL IN AND PACK SOIL TO BOTTOM OF ROOTS.

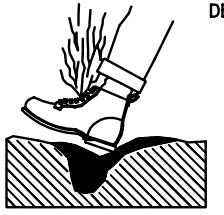

4.
FINISH FILLING IN SOIL. FIRM WITH HEEL.

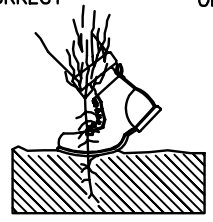

5.
FIRM AROUND SEEDLING WITH FEET.

CORRECT AND INCORRECT DEPTHS

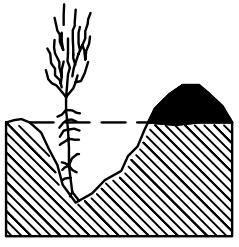

CORRECT
AT SAME DEPTH OR ½" DEEPER THAN IT GREW IN NURSERY.

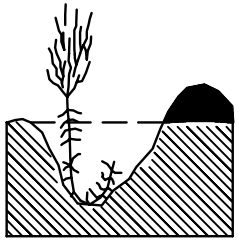

INCORRECT
TOO DEEP. ROOTS BENT.

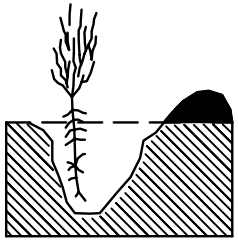

INCORRECT
TOO SHALLOW. ROOTS EXPOSED.

HANDLING SEEDLING IN FIELD.

CORRECT
WET MOSS OR THICK MUDDY WATER.

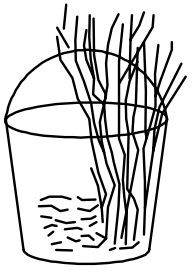

INCORRECT
ROOTS DRY OUT IN HAND.

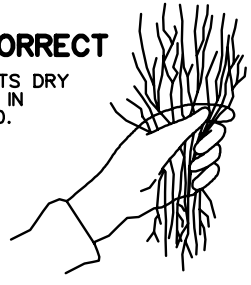

SPECIFICATION REFERENCE	METHOD OF PLANTING FOREST TREE SEEDLINGS	VDOT ROAD AND BRIDGE STANDARDS
605	VIRGINIA DEPARTMENT OF TRANSPORTATION	REVISION DATE / SHEET 1 OF 1 / 1201.03

L-5

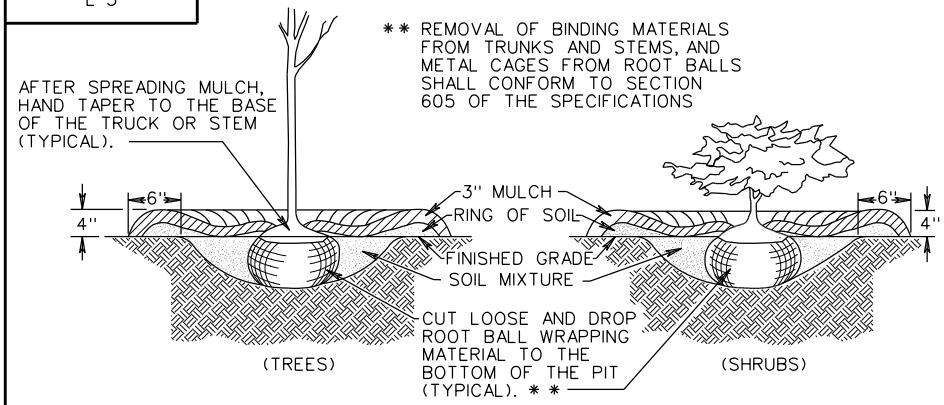

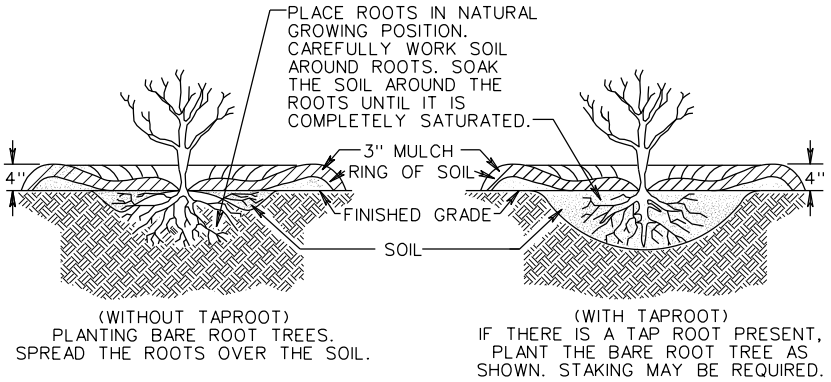

1 / L-5 BALLED & BURLAPPED, & CONTAINER PLANTS

2 / L-5 BARE ROOT PLANTS

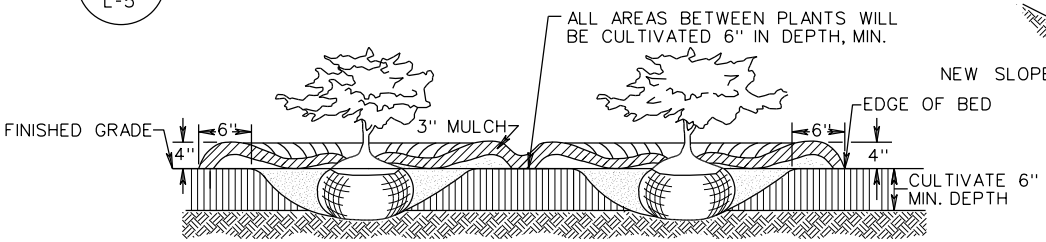

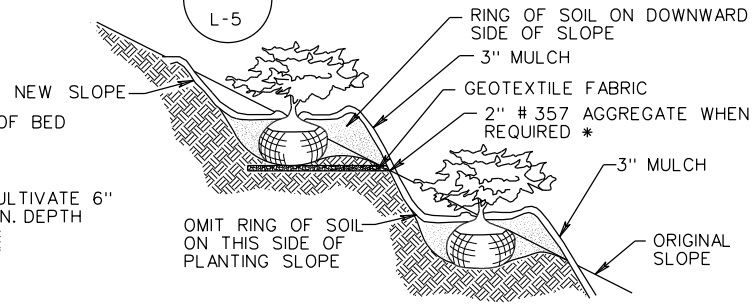

3 / L-5 BED PLANTING

- WHEN A PORTION OF A PLANT BED EXTENDS INTO AN AREA STEEPER THAN 4:1, CULTIVATION OF THAT PORTION SHALL BE OMITTED AND THE ENTIRE AREA BETWEEN PLANTS SHALL BE MULCHED TO BLEND IN WITH THE CULTIVATED BED.
- PLANTING BEDS (CULTIVATED AND NON-CULTIVATED) SHALL BE CUT TO A MAXIMUM 4" IN HEIGHT BY MOWING, AND SHALL AFTERWARDS BE TREATED WITH HERBICIDE AS APPROVED AND DIRECTED BY THE ENGINEER AT LEAST 2 WEEKS PRIOR TO CULTIVATION, PLANTING, OR MULCHING.
- WHEN BARE ROOT PLANTS ARE USED IN BEDS, SHRUB AND ROOT PLACEMENT SHALL CONFORM TO DETAIL 2 / L-5 .
- SFM FOLLOWING BED DESIGNATION STANDS FOR SQUARE FEET OF MULCH AT THE INDICATED QUANTITY.

4 / L-5 SLOPE PLANTING

- WHEN BARE ROOT PLANTS ARE USED ON SLOPE, SHRUB AND ROOT PLACEMENT SHALL CONFORM TO DETAIL 2 / L-5 .
- ON SLOPES STEEPER THAN 3:1, THE FRONT CENTER OF THE PIT SHALL BE MODIFIED WHEN REQUIRED * TO INCLUDE A "V" CUT THE FULL DEPTH OF THE PIT. THE PIT SHALL BE DUG 2" DEEPER THAN SHOWN ON THE SUMMARY SHEET AND BACKFILLED WITH 2" OF #357 AGGREGATE, DAYLIGHTED TO THE SLOPE FACE, AND COVERED WITH GEOTEXTILE FABRIC PRIOR TO BACKFILLING WITH SOIL MIXTURE.

* SEE NOTE FOR PIT DRAINAGE MODIFICATION FOR SLOPE PLANTING SHEET 1201.06.

GENERAL NOTES:

1. SEE LANDSCAPE SUMMARY SHEET FOR PIT SIZES.
2. ROOT BALL SHALL BE POSITIONED LEVEL WITH FINISHED GRADE. SOIL MIXTURE SHALL TAPER ONTO BUT NOT OVER TOP OF THE ROOT BALL. MULCH SHALL EXTEND AT THE PROPER DEPTH OVER THE ENTIRE ROOT BALL AND PLANTING PIT, AND SHALL BE HAND TAPERED TO THE BASE OF ALL TRUNKS AND STEMS AFTER SPREADING.
3. THIS RULE SHALL GOVERN WITH THE FOLLOWING EXCEPTIONS:
   A. SLOPE PLANTINGS - SEE SLOPE PLANTING DETAILS.
   B. INCLUSION OF PIT DRAINAGE SYSTEM - POSITION TOP OF ROOT BALL THE SAME AS FINISHED GRADE.
   C. TREE GRATE PLANTING - SEE TREE GRATE PLANTING DETAILS IN PLANS.

VDOT ROAD AND BRIDGE STANDARDS	PLANTING DETAILS	SPECIFICATION REFERENCE
SHEET 1 OF 1 / REVISION DATE	VIRGINIA DEPARTMENT OF TRANSPORTATION	605 245 203
1201.04		

L-5

STAKING, GUYING

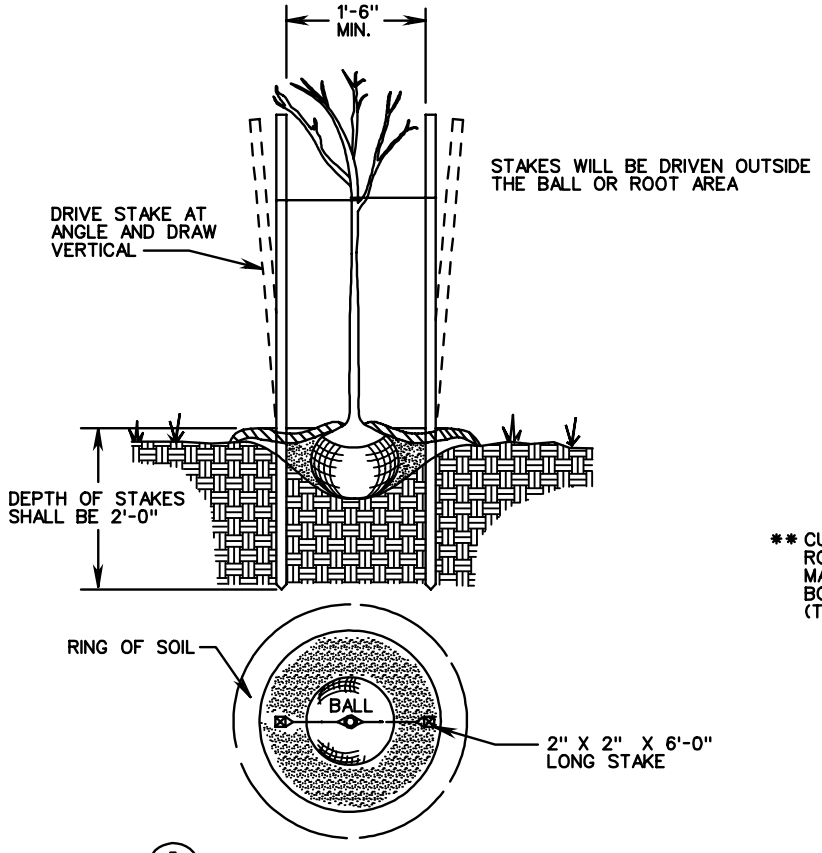

5 / L-5 DOUBLE STAKING & STAKE PLACEMENT

DECIDUOUS TREES LESS THAN 2" IN CALIPER
EVERGREEN TREES LESS THAN 4 FEET IN HEIGHT
SHRUBS 4 FEET OR MORE IN HEIGHT.

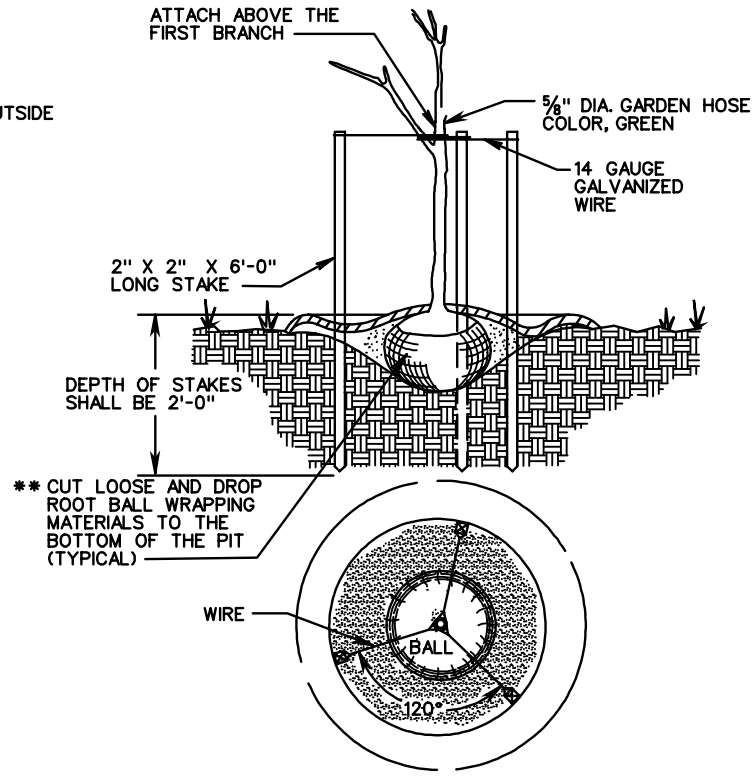

6 / L-5 TRIPLE - GUYING

DECIDUOUS TREES 2" IN CALIPER OR GREATER
EVERGREEN TREES 4 FEET IN HEIGHT OR GREATER

GENERAL NOTES

1. ALL DECIDUOUS TREES OVER 4 FT. IN HEIGHT AND ALL EVERGREEN TREES OVER 4 FT. IN HEIGHT OR TALLER SHALL BE STAKED AND GUYED WITH 3 STAKES AS SHOWN.
2. MULTIPLE STEMMED DECIDUOUS TREES 4 FT. IN HEIGHT SHALL BE STAKED WITH 3 STAKES IN SUCH A MANNER AS TO STABILIZE 3 MAINSTEMS.
3. THE WOOD STAKES SHALL BE 2"X2"X6'-0" LONG DRESSED HARDWOOD AND DECAY RESISTANT.

THE WIRE TIES SHALL BE 14 GAUGE GALVANIZED WIRE, AND BE PROVIDED WITH A ONE FOOT PIECE OF GREEN RUBBER HOSE PLACED TO PREVENT INJURY TO THE BARK. THERE SHOULD BE A 1" - 3" SWAY IN THE TREE (THE WIRES SHOULD NOT BE PULLED TIGHT) FOR BEST ESTABLISHMENT. OTHER ANCHORING METHODS AND MATERIALS MAY BE APPROVED FOR USE BY THE ENGINEER.

** REMOVAL OF BINDING MATERIALS FROM TRUNKS AND STEMS, AND METAL CAGES FROM ROOT BALLS SHALL CONFORM TO THE CURRENT ROAD & BRIDGE SPECS.

SPECIFICATION REFERENCE	PLANTING DETAILS	VDOT ROAD AND BRIDGE STANDARDS
605 244	VIRGINIA DEPARTMENT OF TRANSPORTATION	REVISION DATE / SHEET 1 OF 1 / 1201.05

L-5

PLANTING, STAKING, GUYING

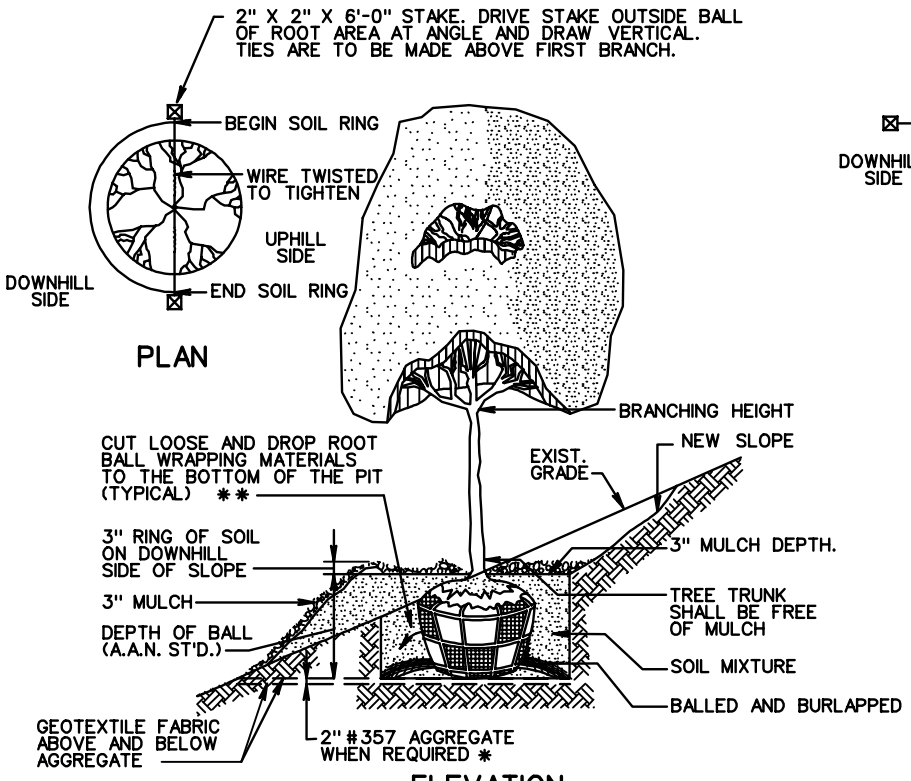

ELEVATION

8 / L-5 DOUBLE STAKING & STAKE PLACEMENT

DECIDUOUS TREES LESS THAN 2" IN CALIPER
EVERGREEN TREES LESS THAN 4' IN HEIGHT
AND SHRUBS 4' OR MORE IN HEIGHT

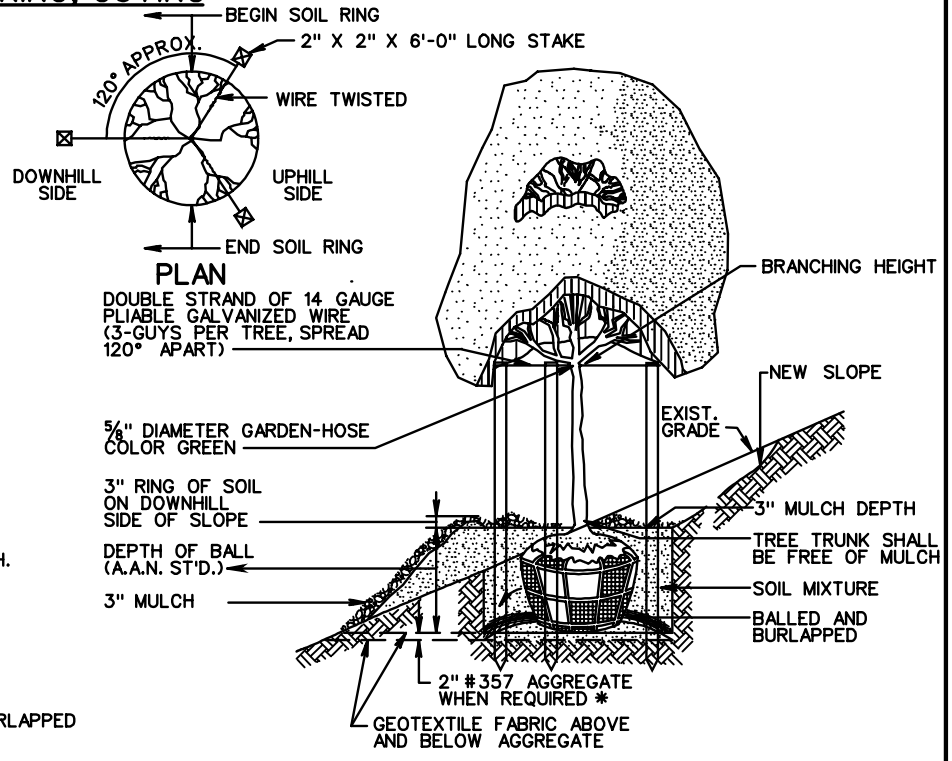

ELEVATION

9 / L-5 TRIPLE GUYING

DECIDUOUS TREES 2" IN CALIPER OR GREATER
EVERGREEN TREES 4' IN HEIGHT OR GREATER

GENERAL NOTES

1. ALL DECIDUOUS TREES 2" IN CALIPER OR MORE AND ALL EVERGREEN TREES OVER 4' IN HEIGHT SHALL BE STAKED OR GUYED AS SHOWN.
2. MULTIPLE STEMED DECIDUOUS TREES OVER 4' IN HEIGHT SHALL BE STAKED WITH 3 STAKES IN SUCH A MATTER AS TO STABILIZE 3 MAINSTEMS
3. THE WOOD STAKES SHALL BE CONSTRUCTION GRADE, ROUGH OR DRESSED, OF SOUND HARDWOOD, DECAY RESISTANT, AND OF THE SIZE INDICATED IN THE DETAILS.
4. THE WIRE TIES SHALL BE 14 GAUGE GALVANIZED WIRE OR OTHER APPROVED MATERIAL AND BE PROVIDED WITH A 1' PIECE OF GREEN RUBBER HOSE PLACED TO PREVENT INJURY TO THE BARK. THERE SHOULD BE A 1" - 3" SWAY IN THE TREE (THE WIRES SHOULD NOT BE PULLED TIGHT) FOR BEST ESTABLISHMENT. OTHER ANCHORING METHODS AND MATERIALS MAY BE APPROVED FOR USED BY THE ENGINEER.
5. ON SLOPES STEEPER THAN 3:1, THE FRONT CENTER OF THE PIT SHALL BE MODIFIED WHEN REQUIRED *TO INCLUDE A "V" CUT THE FULL DEPTH OFTHE PIT. THE PIT SHALL BE DUG 2" DEEPER THAN SHOWN IN THE SUMMARY SHEET AND BACKFILLED WITH 2" OF #357 AGGRGATE DAYLIGHTED TO THE SLOPE FACE, AND COVERED WITH GEOTEXTILE FABRIC PRIOR TO BACK- FILLING WITH SOIL MIXTURE.

* PIT DRAINAGE MODIFICATION FOR SLOPE PLANTING (WHEN REQUIRED)

** REMOVAL OF BINDING MATERIALS FROM TRUNK AND STEMS, AND METAL CAGES FROM ROOT BALLS SHALL CONFORM TO SECTION 605.03 (I) OF THE SPECS.

A. PRIOR TO THE PLANTING ON A SLOPE THE CONTRACTOR SHALL TEST NO MORE THAN 3 PITS FOR PERCOLATION.

B. PERCOLATION TEST SHALL CONSIST OF FILLING THE PIT WITH APPROXIMATELY 6" OF WATER. THE ENGINEER SHALL DETERMINE IF PIT DRAINAGE IS REQUIRED.

C. PAYMENT FOR AGGREGATE, GEOTEXTILE FABRIC, AND PIT MODIFICATION WILL BE MADE IN ACCORDANCE WITH THE ROAD AND BRIDGE SPECS.

VDOT ROAD AND BRIDGE STANDARDS	SLOPE PLANTING DETAILS	SPECIFICATION REFERENCE
SHEET 1 OF 1 / REVISION DATE	VIRGINIA DEPARTMENT OF TRANSPORTATION	203 245 605
1201.06		

FERTILIZER PLACEMENT

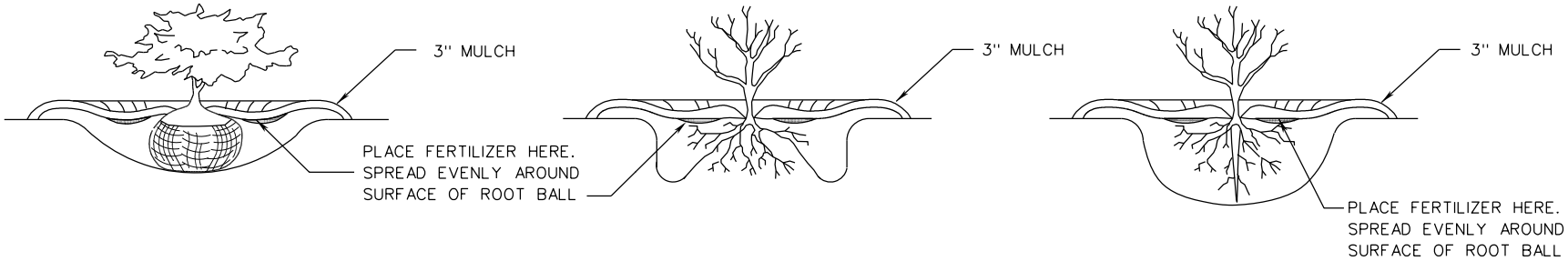

BALLED & BURLAPPED & CONTAINER PLANTS

BARE ROOT PLANTS WITHOUT TAPROOT

BARE ROOT PLANTS WITH TAPROOT

FERTILIZER MATERIALS

FERTILIZER MATERIALS SHALL CONFORM TO THE SECTION 244 OF THE VDOT ROAD AND BRIDGE SPECIFICATIONS.

THE FOLLOWING INFORMATION SHALL BE SHOWN ON A TAG ATTACHED TO FERTILIZER BAG:

1. THE NAME AND ADDRESS OF MANUFACTURER
2. NAME OF MATERIAL
3. NUMBER OF NET POUNDS OF READY MIXED MATERIALS IN THE PACKAGE
4. CHEMICAL COMPOSITION AND ANALYSIS
5. GUARANTEED ANALYSIS (VA. DEPARTMENT OF AGRICULTURE)

MULCHING MATERIALS

BARK-SHALL BE DOUBLE SHREDDED HARDWOOD BARK, DISEASE FREE, BROWN IN COLOR AND SHALL CONFORM TO THE NATIONAL BARK AND SOIL PRODUCER ASSOC. STANDARDS FOR CLASSIFICATION, PARTICLE SIZE, PERCENTAGE WOOD CONTENT, MOISTURE RETENTION AND PH RATING.
OTHER MULCH MATERIAL MAY BE USED WITH APPROVAL FROM THE ENGINEER.

FERTILIZER RATES

2 OUNCES PER VINE AND GROUND COVER UP TO ONE GALLON CONTAINER.

8 OUNCES PER SHRUB BARE ROOT OR ONE GALLON CONTAINER.

16 OUNCES PER SHRUB, BALLED AND BURLAPPED OR 2 THROUGH FIVE GALLON CONTAINER.

24 OUNCES PER TREE UNDER 2" CALIPER (INCLUDES MULTI-STEMMED AND EVERGREEN TREES UNDER 8")

32 OUNCES PER TREE OVER 2" CALIPER (INCLUDES MULTI-STEMMED AND EVERGREEN TREES OVER 8' IN HEIGHT)

THE FERTILIZER SHALL BE APPLIED AS A SURFACE APPLICATION. SPREAD EVENLY OVER TOP OF THE ROOT BALL AND PLANT PIT SOIL PRIOR TO MULCHING.

FERTILIZER SHALL NOT BE MIXED WITH THE SOIL MIXTURE.

APPROVED MULCHES

TYPE	DEPTH
DOUBLE SHREDDED HARDWOOD BARK	3"

SPECIFICATION REFERENCE	FERTILIZER AND MULCH	VDOT ROAD AND BRIDGE STANDARDS
605 244	VIRGINIA DEPARTMENT OF TRANSPORTATION	REVISION DATE / SHEET 1 OF 1 / 1201.07

TW-1

CRUSHED LIMESTONE SHALL NOT BE PLACED IN DIRECT CONTACT WITH THE ROOTS OF A TREE.

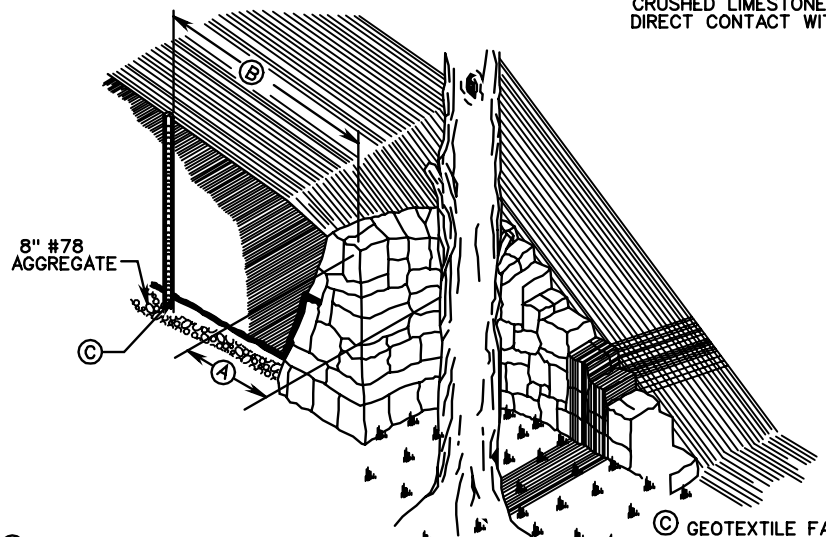

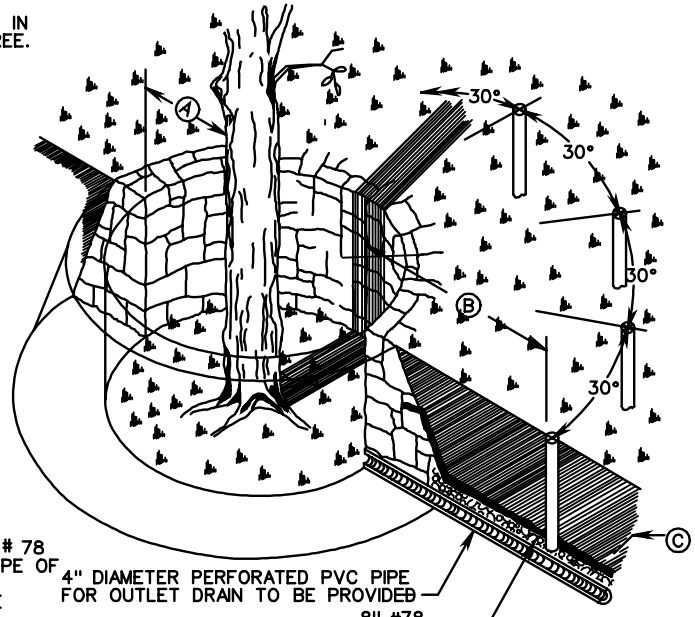

Ⓐ DISTANCE FROM TREE TRUNK TO THE WALL OR WELL TO BE 1/4 OF THE SPREAD OF THE TREE, OR AS INDICATED ON THE PLANS.

Ⓒ GEOTEXTILE FABRIC SHALL COVER ALL # 78 AGGREGATE AND 1/2 THE BACK SLOPE OF RETAINING WALL, AND SHALL BE LAID BETWEEN THE JOINTS ON DRY RUBBLE WALLS AT LEAST AT FIVE LOCATIONS AROUND THE WALL AS DETAILED.

4" DIAMETER PERFORATED PVC PIPE FOR OUTLET DRAIN TO BE PROVIDED

8" #78 AGGREGATE

Ⓑ 2" DIAMETER PVC PIPE PLACED AT DRIP LINE (30° DIAMETER O.C. AROUND TREE) AND REACHING FROM NEW GROUND ELEVATION TO #78 AGGREGATE.

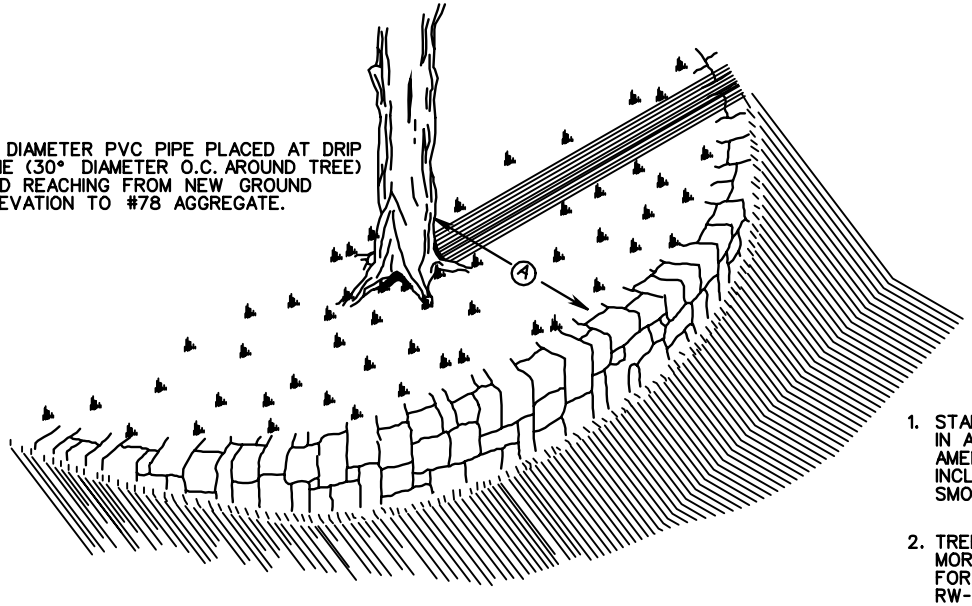

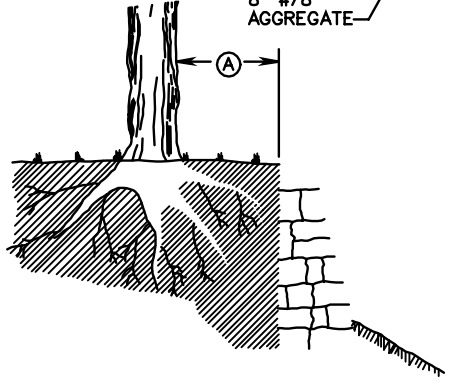

GENERAL NOTES

1. STANDARD TREE WALLS AND TREE WELLS SHALL BE MEASURED AND PAID FOR IN ACCORDANCE WITH SEC. 506 OF THE ROAD AND BRIDGE SPECS. AND AS AMENDED BY THE FOLLOWING: THE CONTRACT UNIT PRICE SHALL ALSO INCLUDE #78 AGGREGATE, 4" PERFORATED SMOOTH WALL PVC PIPE, 2" SMOOTH WALL PVC PIPE, AND GEOTEXTILE FABRIC COMPLETE IN PLACE.
2. TREE WALLS AND TREE WELLS ARE TO BE CONSTRUCTED OF DRY RUBBLE, MORTAR RUBBLE, BLOCK OR BLOCK FACED BRICK AS SHOWN IN THE PLANS. FOR DETAILS OF RETAINING WALL DESIGN AND FOUNDATION, SEE STANDARD RW-1, RW-1A, OR RW-1B UNLESS OTHERWISE NOTED ON PLANS.
3. ALL TREE WALL OR TREE WELL INSTALLATIONS ARE TO BE APPROVED BY THE ENGINEER.

VDOT ROAD AND BRIDGE STANDARDS	STANDARD TREE WALLS AND TREE WELLS	SPECIFICATION REFERENCE
SHEET 1 OF 1 / REVISION DATE	SUGGESTED TREATMENT	203 232 245 506
1201.08	VIRGINIA DEPARTMENT OF TRANSPORTATION	

PT-1

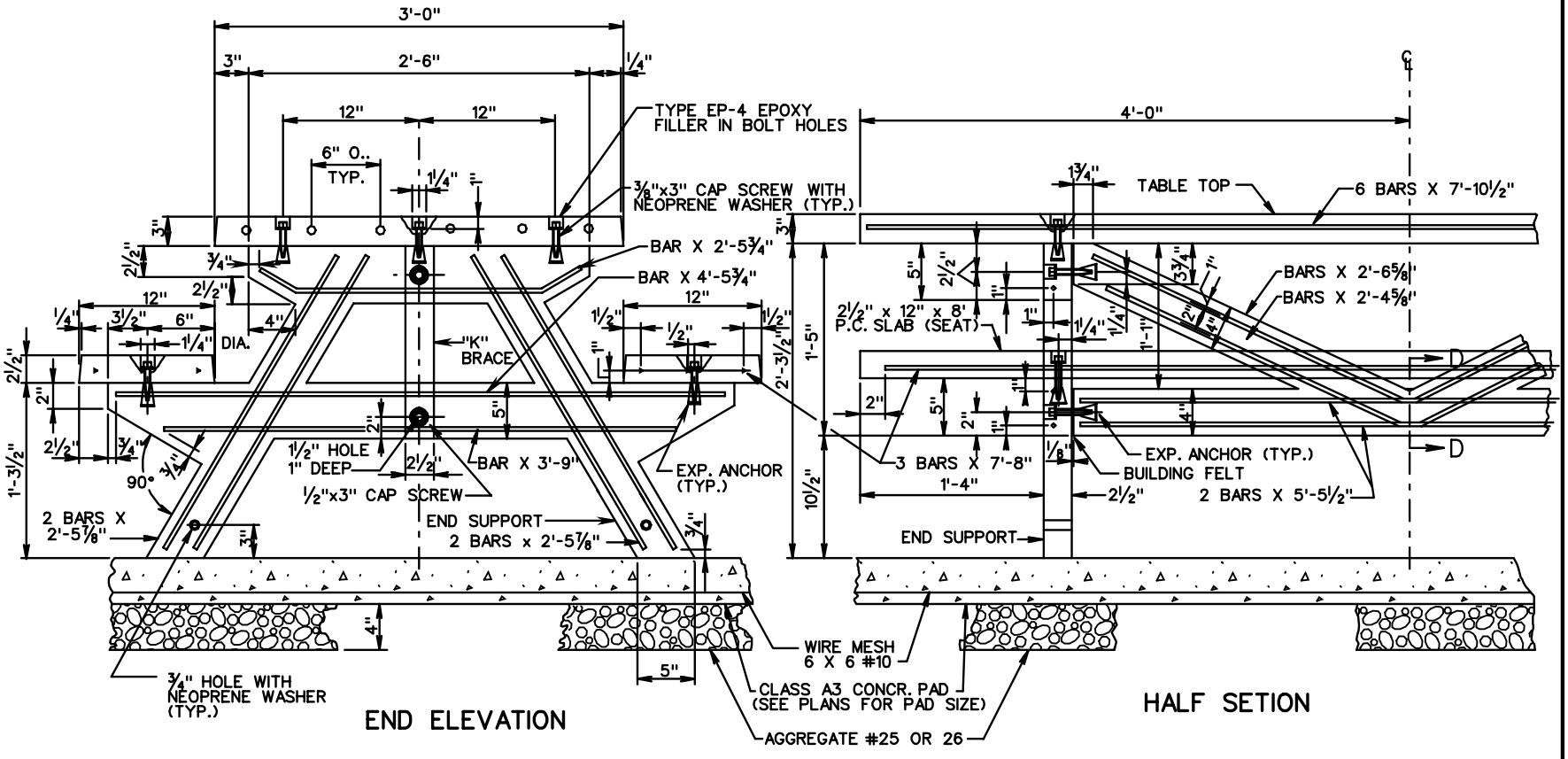

NOTES

1. PICNIC TABLE SHALL BE CLASS A4 CONCRETE.
2. ALL STEEL REINFORING BARS SHALL BE #3.
3. ALL HARDWARE IS TO BE GALVANIZED.
4. SURFACE TEXTURE IS TO BE LIGHTLY BUFFED SMOOTH.
5. EPOXY FILLER IN BOLT HOLES ARE TO MATH COLOR OF ADJACENT SURFACE.
6. MEASUREMENT AND PAYMENT OF PRECAST CONCRETE PICNIC TABLE, WITH PAD, WILL BE PAID FOR ON AN EACH BASIS. COST SHALL INCLUDE PRICE OF CONRETE PICNIC TABLE, PAD, AND AGGREGATE, COMPLETE IN PLACE.

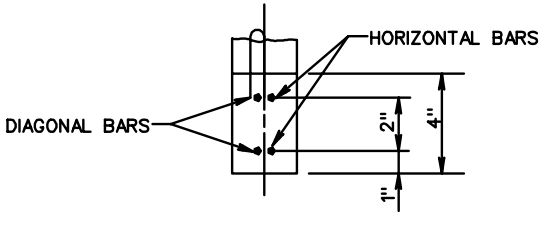

SETION D-D

SPECIFICATION REFERENCE	PRECAST CONCRETE PICNIC TABLE VIRGINIA DEPARTMENT OF TRANSPORTATION	VDOT ROAD AND BRIDGE STANDARDS	
		REVISION DATE	SHEET 1 OF 1
			1201.09

RW-1

E/H	FOR UNLOADED WALLS	FOR LOADED WALLS
1.0	B = 0.50 H	B = 0.66 H
1.1	B = 0.57 H	B = 0.67 H
1.2	B = 0.61 H	B = 0.68 H
1.3	B = 0.64 H	B = 0.69 H
1.4	B = 0.66 H	B = 0.70 H
1.5	B = 0.67 H	B = 0.71 H
1.6	B = 0.69 H	B = 0.72 H
1.7	B = 0.70 H	B = 0.73 H
1.8	B = 0.71 H	B = 0.74 H
2.0	B = 0.73 H	B = 0.75 H
2.5	B = 0.75 H	B = 0.76 H
3.0	B = 0.77 H	B = 0.77 H

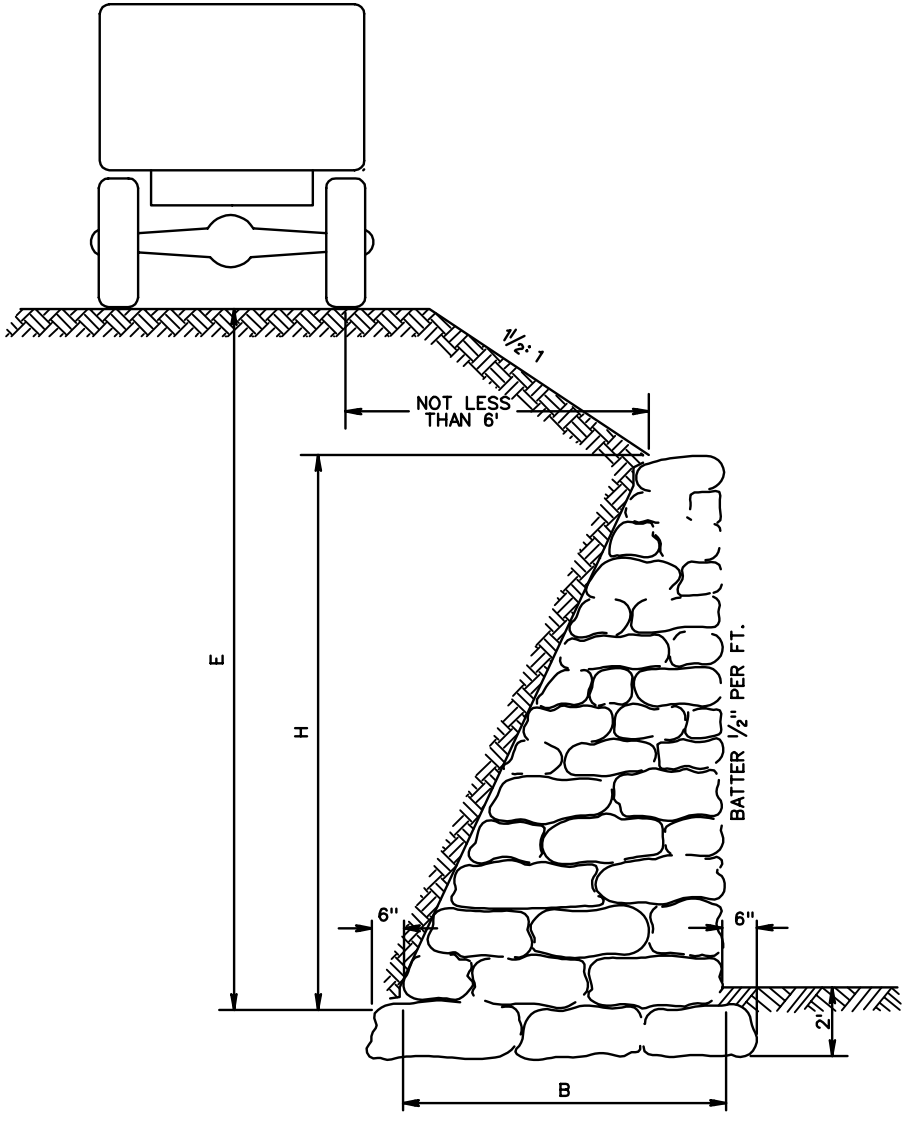

TOP THICKNESS FOR UNLOADED WALLS ARE TO BE 0.15 H WITH A MINIMUM THICKNESS OF 2 FT.

TOP THICKNESS FOR LOADED WALLS ARE TO BE 0.20 H WITH A MINIMUM THICKNESS OF 2.5 FT.

MINIMUM THICKNESS OF BASE = TOP THICKNESS

MAXIMUM HEIGHT OF WALL (H) IS TO BE 8 FT.

VDOT
ROAD AND BRIDGE STANDARDS

SHEET 1 OF 1

REVISION DATE

1201.10

DRY RUBBLE RETAINING WALLS

VIRGINIA DEPARTMENT OF TRANSPORTATION

SPECIFICATION REFERENCE

506

RW-1A

HEIGHT OF WALL "H" IN FEET	THICKNESS AT TOP "A" IN FEET	THICKNESS AT BASE IN FEET	AREA OF WALL SQ. FEET	AREA OF FOOTING SQ. FEET
2	1'-6"	1'-6"	0.750	2.875
3	1'-6"	1'-6"	2.250	2.875
4	1'-6"	1'-7¼"	3.828	2.997
5	1'-6"	2'-0"	5.862	3.513
6	1'-6"	2'-4¾"	8.212	4.113
7	1'-6"	2'-9½"	12.060	4.615
8	1'-6"	3'-2½"	14.240	5.186
9	1'-6"	3'-7¼"	17.813	5.762
10	1'-6"	4'-0"	21.781	6.344
11	1'-6"	4'-4¾"	26.148	6.927
12	1'-6"	4'-9½"	30.909	7.516
13	1'-6"	5'-2½"	36.070	8.105
14	1'-6"	5'-7¼"	41.629	8.696
15	1'-6"	6'-0"	47.587	9.288

H = HEIGHT IN FEET
A = 1'-6"
BASE = 4/10 H
EARTH = 100 Lbs.
RUBBLE = 150 LBS.
ANGLE OF REPOSE = 1 ½: 1

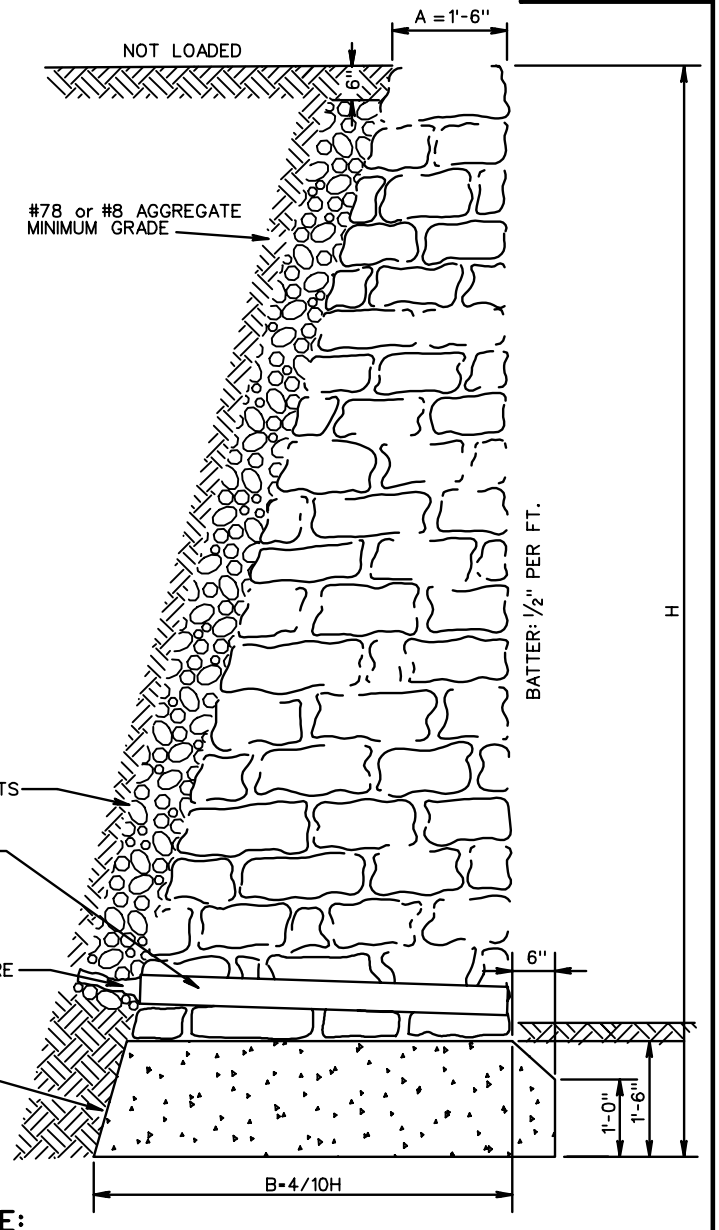

DRAIN PIPES ARE TO BE ONE CONTINUOUS LENGTH OR BELL AND SPIGOT WITH MORTARED JOINTS.

NOTE:

DEPTH OF WALL IN GROUND DETERMINED BY CONDITIONS. SHALL BE NOT LESS THAN 1'-6".

IF COMPRESSION AT TOE EXCEEDS SAFE BEARING CAPACITY OF SOIL, A SPECIAL FOOTING IS TO BE USED.

SPECIFICATION REFERENCE	MORTAR RUBBLE RETAINING WALL LEVEL BACKFILL VIRGINIA DEPARTMENT OF TRANSPORTATION	VDOT ROAD AND BRIDGE STANDARDS	
506		REVISION DATE	SHEET 1 OF 1
			1201.11

RW-1B

HEIGHT OF WALL "H" IN FEET	THICKNESS AT TOP "A" IN FEET	THICKNESS AT BASE IN FEET	AREA OF WALL SQ. FEET	AREA OF FOOTING SQ. FEET
3	1'-6"	1'-9⅝"	2.362	3.213
4	1'-6"	2'-4⅞"	4.453	3.972
5	1'-6"	3'-0"	7.087	4.788
6	1'-8"	3'-7¼"	10.763	5.663
7	1'-8"	4'-2⅜"	14.642	6.518
8	1'-9"	4'-9⅝"	19.429	7.396
9	1'-9"	5'-4⅞"	24.531	8.269
10	1'-10"	6'-0"	30.634	9.157
11	1'-10"	6'-7¼"	35.970	10.038
12	1'-11"	7'-2⅜"	44.395	10.930
13	1'-11"	7'-9⅝"	51.968	11.816
14	2'-0"	8'-4⅞"	60.714	12.711
15	2'-0"	9'-0"	69.530	13.595

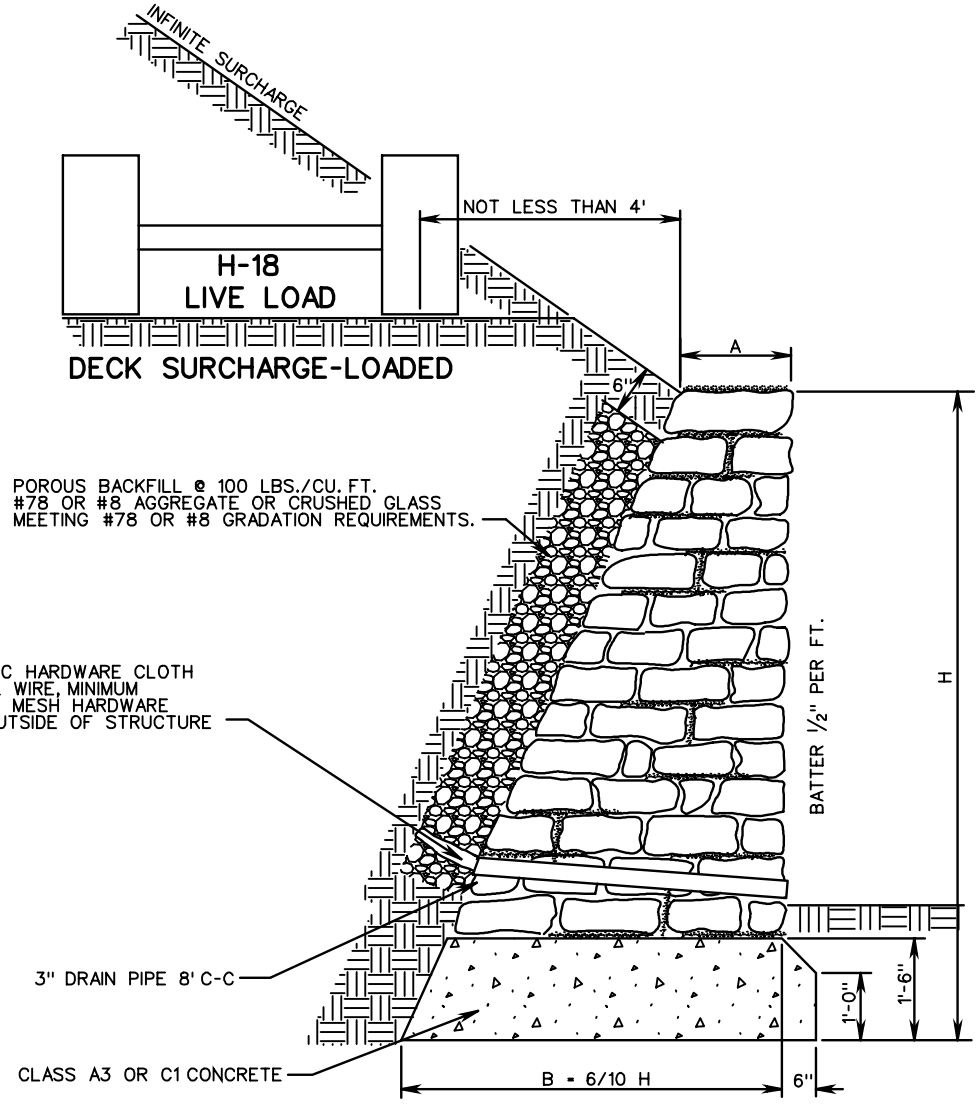

DRAIN PIPES ARE TO BE ONE CONTINUOUS LENGTH OR BELL AND SPIGOT WITH MORTARED JOINTS.

H = HEIGHT IN FEET

BASE = 6/10 H

WT. EARTH = 100 LBS./CU. FT.

WT. RUBBLE = 150 LBS./CU. FT.

ANGLE OF REPOSE = 1 ½: 1

NOTE:

IF COMPRESSION AT TOE EXCEEDS SAFE BEARING CAPACITY OF SOIL, A SPECIAL FOOTING IS TO BE USED.

DEPTH OF WALL IN GROUND SHALL BE DETERMINED BY CONDITIONS. SHALL BE NOT LESS THAN 1'-6".

VDOT
ROAD AND BRIDGE STANDARDS

SHEET 1 OF 1 | REVISION DATE
1201.12

MORTAR RETAINING WALL

INFINITE SURCHARGE AND DECK SURCHARGE - LOADED

VIRGINIA DEPARTMENT OF TRANSPORTATION

SPECIFICATION REFERENCE
506

SECTION 1300

TRAFFIC CONTROL

STANDARD

THIS PAGE INTENTIONALLY LEFT BLANK

VDOT
ROAD AND BRIDGE STANDARDS

SHEET 1 OF 1

REVISION DATE

TITLE

VIRGINIA DEPARTMENT OF TRANSPORTATION

SPECIFICATION REFERENCE

STANDARD	TITLE	PAGE
CF-1	CABINET FOUNDATION DETAILS TYPE A TRAFFIC SIGNAL EQUIPMENT	1301.10
CF-2	CABINET FOUNDATION DETAILS	1301.20
CF-3	CABINET FOUNDATION DETAILS TYPE B TRAFFIC SIGNAL EQUIPMENT	1301.30
CF-4	CABINET FOUNDATION DETAILS TYPE A TRAFFIC SIGNAL CABINET AND UPS	1301.40
MP-2	SIGNAL POLE DETAILS (STRAIN AND COMBINATION LUMINAIRE STRAIN POLE)	1302.20
MP-3	SIGNAL POLE DETAILS (MAST ARM AND COMBINATION LUMINAIRE MAST ARM POLE)	1302.24
	SIGNAL POLE DETAILS (MAST ARM SIGNAL POLE MAXIMUM LOADING STANDARDS)	1302.25
	SIGNAL POLE DETAILS (MAST ARM SIGNAL POLE MAXIMUM LOADING STANDARDS)	1302.26
	SIGNAL POLE DETAILS (MAST ARM SIGNAL POLE MAXIMUM LOADING STANDARDS)	1302.27
PF-2	PEDESTAL POLE AND FOUNDATIONPEDESTAL	1302.30
	POLE AND FOUNDATION (INSTALLATION DETAILS)	1302.31
HH-1	HANDHOLE	1302.40
AB-1	ANCHOR BOLTS	1302.50
VS-1	VENTED VARMINT SCREEN	1302.60
SW-1	SIGNAL HEAD MOUNTING DETAILS SPAN WIRE	1303.10
SW-2	SIGNAL HEAD MOUNTING DETAILS SPAN WIRE	1303.20
SM-3	SIGNAL HEAD MOUNTING DETAILS - MAST ARM	1303.30
SMB-1	SIGNAL HEAD MOUNTING DETAILS - POLE TOP	1303.40
SMB-2	SIGNAL HEAD MOUNTING DETAILS - POLE TOP WITH TERMINAL COMPARTMENT AND BRACKET	1303.41
SMB-3	SIGNAL HEAD MOUNTING DETAILS - POLE SIDE MOUNTING BRACKET	1303.42
TA-1	TETHER WIRE DETAILS	1304.10
SMD-1,2	SIGN MOUNTING DETAILS	1305.10
WD-1	STEEL STRAIN SIGNAL POLE WIRING AND RIGGING DETAILS	1306.10
WD-2	WOOD POLE WIRING AND RIGGING	1306.20
PA-1,2	PEDESTRIAN ACTUATION	1307.10
PA-3	PEDESTRIAN ACTUATION DETAILS	1307.11
PA-4	PEDESTRIAN ACTUATION DETAILS	1307.12
SP-5,6,7,8,9	PEDESTRIAN SIGNAL INDICATION	1308.10
FB-2	FLASHING BEACON	1309.10
PF-8	SIGNAL POLE FOUNDATION	1310.12
LF-1	LIGHTING POLE FOUNDATION	1310.20
LP-1,2	LIGHTING POLE DETAILS CONVENTIONAL AND OFFSET	1311.10
LP-3	HIGH MAST LIGHT POLE	1311.20
SE-1	ELECTRICAL SERVICE	1312.10
SE-2	ELECTRICAL SERVICE	1312.20

INDEX OF SHEETS
SECTION 1300-TRAFFIC CONTROL

VIRGINIA DEPARTMENT OF TRANSPORTATION

VDOT
ROAD AND BRIDGE STANDARDS

REVISION DATE 09/18

2016 ROAD & BRIDGE STANDARDS

STANDARD	TITLE	PAGE
SE-3	ELECTRICAL SERVICE	1312.30
SE-4	ELECTRICAL SERVICE	1312.40
SE-5	ELECTRICAL SERVICE	1312.50
SE-6	ELECTRICAL SERVICE	1312.60
SE-7	ELECTRICAL SERVICE	1312.70
SE-8	ELECTRICAL SERVICE	1312.80
SE-9	ELECTRICAL SERVICE	1312.90
SE-10	ELECTRICAL SERVICE	1313.10
SE-11	ELECTRICAL SERVICE	1313.20
CCW-1	CONTROL CENTER WIRING	1314.10
TD-1A,B,C	LOOP DETECTOR	1315.10
JB-R1,R2	JUNCTION BOX TRAFFIC USE	1317.10
JB-S1,S2,S3,S4	JUNCTION BOX NON-DELIBERATE TRAFFIC USE	1317.20
JB-S1,S2,S3,S4	JUNCTION BOX NON-DELIBERATE TRAFFIC USE	1317.21
ECI-1,2	ELECTRICAL CONDUIT AND CONDUCTOR CABLE	1318.10
PCS-1	PROCEDURES FOR CALCULATING CENTROID AND TOTAL SQUARE FOOTAGE OF SIGN PANEL	1319.10
WSP-1	TEMPORARY SIGNS (FOR CONSTRUCTION, MAINTENANCE, PERMIT AND UTILITY ACTIVITIES) WOOD POST AND SQUARE TUBE POST SIGN STRUCTURES	1320.10
	TEMPORARY SIGNS (FOR CONSTRUCTION, MAINTENANCE, PERMIT AND UTILITY ACTIVITIES) WOOD POST OR SQUARE TUBE POST SIGN STRUCTURES	1320.11
	TEMPORARY SIGNS (FOR CONSTRUCTION, MAINTENANCE, PERMIT AND UTILITY ACTIVITIES) WOOD POST SIGN STRUCTURES	1320.12
	TEMPORARY SIGNS (FOR CONSTRUCTION, MAINTENANCE, PERMIT AND UTILITY ACTIVITIES) WOOD POST SIGN STRUCTURES - ATTACHMENT DETAILS	1320.13
	TEMPORARY SIGNS (FOR CONSTRUCTION, MAINTENANCE, PERMIT AND UTILITY ACTIVITIES) SQUARE TUBE POST SIGN STRUCTURES - ATTACHMENT DETAILS	1320.14
	TEMPORARY SIGNS (FOR CONSTRUCTION, MAINTENANCE, PERMIT AND UTILITY ACTIVITIES) SQUARE TUBE POST SIGN STRUCTURES - ATTACHMENT DETAILS	1320.15
	TEMPORARY SIGNS (FOR CONSTRUCTION, MAINTENANCE, PERMIT AND UTILITY ACTIVITIES) SQUARE TUBE POST SIGN STRUCTURES	1320.16
STP-1	SQUARE TUBE SIGN POST	1321.10
	SQUARE TUBE SIGN POST	1321.11
	SQUARE TUBE SIGN POST	1321.12
	SQUARE TUBE SIGN POST FOUNDATION TYPE A DETAILS	1321.13
	SQUARE TUBE SIGN POST FOUNDATION TYPE B DETAILS	1321.14
	SQUARE TUBE SIGN POST FOUNDATION TYPE C DETAILS	1321.15
	SQUARE TUBE SIGN POST FOUNDATION TYPE B AND C DETAILS	1321.16
	SQUARE TUBE SIGN POST FOUNDATION TYPE D AND E DETAILS	1321.17
	SQUARE TUBE SIGN POST FOUNDATION TYPE F DETAILS	1321.18
	SQUARE TUBE SIGN POST SIGN BRACING DETAILS	1321.19
	SQUARE TUBE SIGN POST SIGN BRACING DETAILS	1321.20
	SQUARE TUBE SIGN POST SIGN PANEL ATTACHMENT DETAILS	1321.21

INDEX OF SHEETS

SECTION 1300 - TRAFFIC CONTROL

VIRGINIA DEPARTMENT OF TRANSPORTATION

STANDARD	TITLE	PAGE
STP-2	FOUR INCH SQUARE TUBE SIGN POST MASH APPROVED DESIGN	1321.40
	FOUR INCH SQUARE TUBE SIGN POST MASH APPROVED DESIGN	1321.41
	FOUR INCH SQUARE TUBE SIGN POST POST AND FOUNDATION DETAILS	1321.42
	FOUR INCH SQUARE TUBE SIGN POST SLIP BASE DETAILS	1321.43
	FOUR INCH SQUARE TUBE SIGN POST HINGE ASSEMBLY DETAILS	1321.44
	FOUR INCH SQUARE TUBE SIGN POST FOUNDATION SIZES	1321.45
	FOUR INCH SQUARE TUBE SIGN POST FOUNDATION SIZES	1321.46
	FOUR INCH SQUARE TUBE SIGN POST FOUNDATION TYPES AND REINFORCEMENT	1321.47
	FOUR INCH SQUARE TUBE SIGN POST SIGN BRACING DETAILS	1321.48
	FOUR INCH SQUARE TUBE SIGN POST SIGN BRACING AND SIGN PANEL ATTACHMENT DETAILS	1321.49
	FOUR INCH SQUARE TUBE SIGN POST SIGN BRACING AND SIGN PANEL ATTACHMENT DETAILS	1321.50
	FOUR INCH SQUARE TUBE SIGN POST SIGN BRACING AND SIGN PANEL ATTACHMENT DETAILS	1321.51
SSP-VA	VA SIGN STRUCTURE	1322.10
	VA SIGN STRUCTURE	1322.11
	VA SIGN STRUCTURE	1322.12
	VA SIGN STRUCTURE	1322.13
SSP-VIA	INTERSTATE SIGN STRUCTURE	1323.10
	INTERSTATE SIGN STRUCTURE	1323.11
	INTERSTATE SIGN STRUCTURE	1323.12
	INTERSTATE SIGN STRUCTURE	1323.13
	INTERSTATE SIGN STRUCTURE	1323.14
	INTERSTATE SIGN STRUCTURE	1323.15
	INTERSTATE SIGN STRUCTURE	1323.16
	INTERSTATE SIGN STRUCTURE	1323.17
	INTERSTATE SIGN STRUCTURE	1323.18
	INTERSTATE SIGN STRUCTURE	1323.19
OSS-1	OVERHEAD SIGN STRUCTURE TYPICAL DETAILS	1324.10
	OVERHEAD SIGN STRUCTURE SOCKETED BASE PLATE CONNECTION	1324.11
	OVERHEAD SIGN STRUCTURE GUSSET PLATE CONNECTION	1324.12
	OVERHEAD SIGN STRUCTURE FOUNDATION DETAILS	1324.13
	OVERHEAD SIGN STRUCTURE ELECTRICAL DETAILS FOR SIGN LIGHTING	1324.14
	OVERHEAD SIGN STRUCTURE SIGN HANGER DETAILS	1324.15
	OVERHEAD SIGN STRUCTURE LUMINAIRE HANGER DETAILS	1324.16

INDEX OF SHEETS
SECTION 1300-TRAFFIC CONTROL

VIRGINIA DEPARTMENT OF TRANSPORTATION

VDOT
ROAD AND BRIDGE STANDARDS

REVISION DATE 08/19

1300.03

STANDARD	TITLE	PAGE
SPD-1	SIGN PANEL DESIGN	1325.10
	SIGN PANEL DESIGN	1325.11
SPD-2	EXTRUDED SIGN PANEL DESIGN	1325.20
	EXTRUDED SIGN PANEL DESIGN	1325.21
SPD-3	SIGN PANEL DESIGN	1325.30
SPD-4	SIGN PANEL DESIGN	1325.40
SPD-5	SIGN PANEL DESIGN	1325.50
SPD-6	SIGN PANEL DESIGN	1325.60
SPD-7	SIGN PANEL DESIGN	1325.70
PRS-1	PUNCHING REQUIREMENTS FOR SIGN PANELS	1326.10
ED-2	ROAD EDGE DELINEATOR	1327.10
ED-3	INTERSTATE ROAD EDGE DELINEATORS	1327.20
MM-1 & USP-1	MILEPOST MARKERS & U-TYPE STEEL POST	1328.10
ISD-1	INTERCHANGE EXIT RAMP SIGNING DETAILS MOUNTING HEIGHTS OF SIGN INSTALLATIONS	1329.10
PM-1	TYPICAL PAVEMENT MARKING INTERCHANGE	1330.10
PM-2	TYPICAL PAVEMENT MARKING LIMITED ACCESS LANE DROP	1330.20
PM-3	TYPICAL PAVEMENT MARKING UNSIGNALIZED INTERSECTIONS	1330.30
	TYPICAL PAVEMENT MARKING SIGNALIZED INTERSECTIONS	1330.31
	TYPICAL PAVEMENT MARKING SIGNALIZED INTERSECTIONS	1330.32
	TYPICAL PAVEMENT MARKING CROSSWALK MARKINGS	1330.33
PM-5	TYPICAL PAVEMENT MARKING LEFT TURN PAVEMENT MARKED MEDIAN	1330.50
	TYPICAL PAVEMENT MARKING TWO WAY LEFT-TURN LANE	1330.51
PM-6	TYPICAL PAVEMENT MARKINGS BICYCLE LANE	1330.60
	TYPICAL PAVEMENT MARKINGS BICYCLE LANE AND MARKED SHARED LANE	1330.61
PM-7	TYPICAL PAVEMENT MARKING RAILROAD-HIGHWAY GRADE CROSSING	1330.70
PM-8	TYPICAL PAVEMENT MARKER LOCATION DETAILS	1330.80
	TYPICAL PAVEMENT MARKER LOCATION DETAILS	1330.81
PM-9	PAVEMENT MARKING LOCATION DETAILS	1330.90

INDEX OF SHEETS

SECTION 1300 - TRAFFIC CONTROL

VIRGINIA DEPARTMENT OF TRANSPORTATION

STANDARD	TITLE	PAGE
PM-10	PAVEMENT WORD, SYMBOL, AND ARROW MARKINGS LETTERS AND NUMERALS DETAILS	1340.10
	PAVEMENT WORD, SYMBOL, AND ARROW MARKINGS WORDS DETAILS	1340.11
	PAVEMENT WORD, SYMBOL, AND ARROW MARKINGS SQUARE FOOT AREAS OF SYMBOLS AND ARROWS	1340.12
	PAVEMENT WORD, SYMBOL, AND ARROW MARKINGS ARROW DETAILS	1340.13
	PAVEMENT WORD, SYMBOL, AND ARROW MARKINGS ARROW DETAILS	1340.14
	PAVEMENT WORD, SYMBOL, AND ARROW MARKINGS ARROW DETAILS	1340.15
	PAVEMENT WORD, SYMBOL, AND ARROW MARKINGS SYMBOL DETAILS	1340.16
	PAVEMENT WORD, SYMBOL, AND ARROW MARKINGS SYMBOL DETAILS	1340.17
	PAVEMENT WORD, SYMBOL, AND ARROW MARKINGS SYMBOL DETAILS	1340.18
	PAVEMENT WORD, SYMBOL, AND ARROW MARKINGS SYMBOL DETAILS	1340.19
	PAVEMENT WORD, SYMBOL, AND ARROW MARKINGS SQUARE FOOT AREAS OF ROUTE SHIELD SYMBOLS	1340.20
	PAVEMENT WORD, SYMBOL, AND ARROW MARKINGS ROUTE SHIELD DETAILS	1340.21
	PAVEMENT WORD, SYMBOL, AND ARROW MARKINGS ROUTE SHIELD DETAILS	1340.22
	PAVEMENT WORD, SYMBOL, AND ARROW MARKINGS ROUTE SHIELD DETAILS	1340.23
	PAVEMENT WORD, SYMBOL, AND ARROW MARKINGS ROUTE SHIELD DETAILS	1340.24

INDEX OF SHEETS
SECTION 1300-TRAFFIC CONTROL

VIRGINIA DEPARTMENT OF TRANSPORTATION

VDOT
ROAD AND BRIDGE STANDARDS

REVISION DATE
NEW 09/18

SHEET 5 OF 5

1300.05

STANDARD

THIS PAGE INTENTIONALLY LEFT BLANK

VDOT
ROAD AND BRIDGE STANDARDS

SHEET 1 OF 1

REVISION DATE

TITLE

VIRGINIA DEPARTMENT OF TRANSPORTATION

SPECIFICATION REFERENCE

CF-1

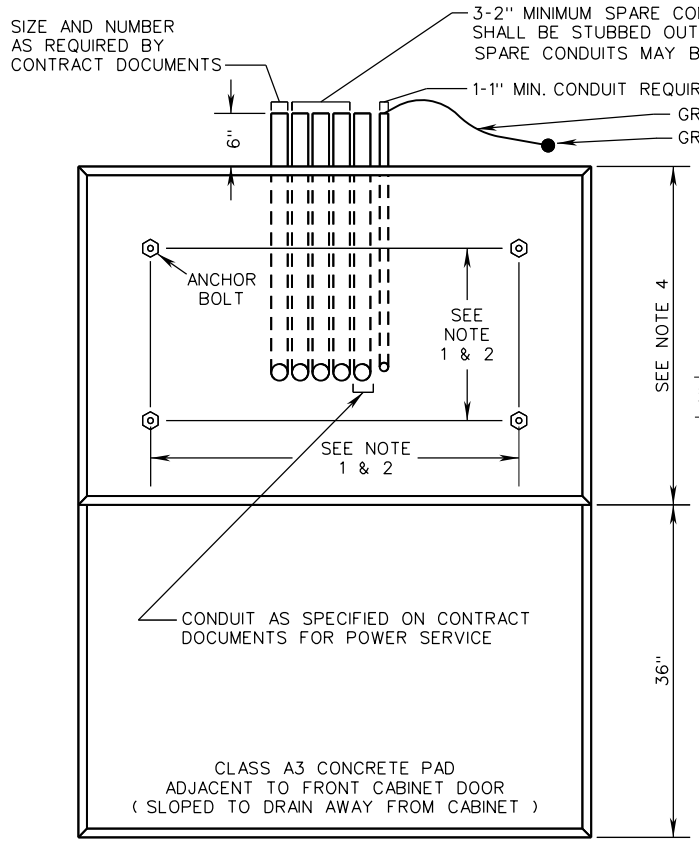

TOP VIEW

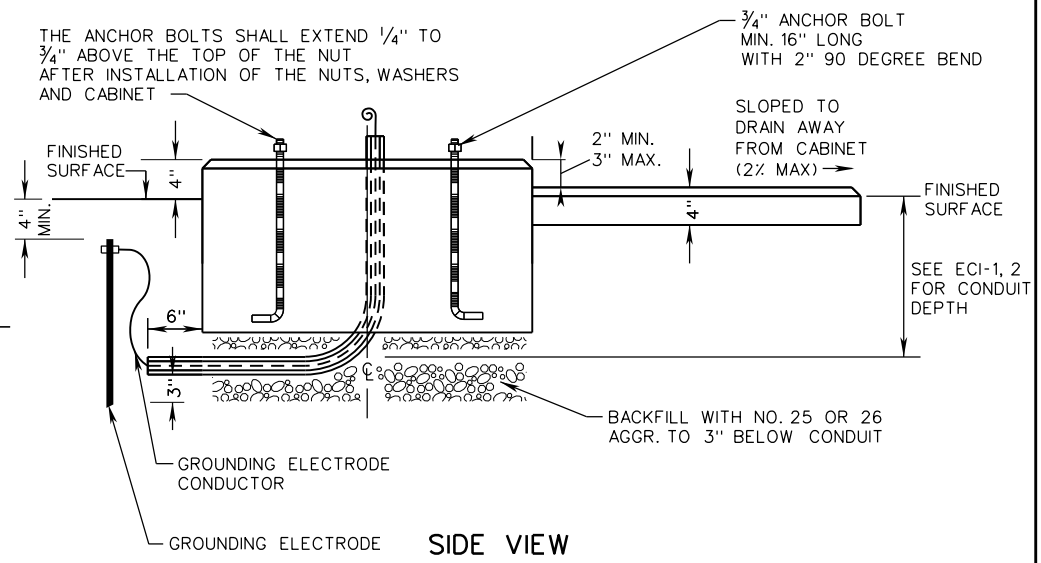

SIDE VIEW

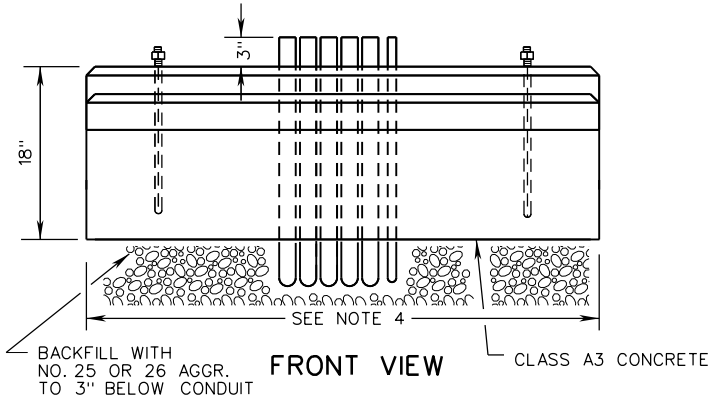

FRONT VIEW

NOTES:

1. ANCHOR BOLTS AND BOLT TEMPLATE SHALL BE FURNISHED WITH CABINET.
2. CABINET SHALL BE CENTERED ON FOUNDATION.
3. THE CONTROLLER CABINET AT THE INSIDE AND OUTSIDE FOUNDATION JOINTS SHALL BE SEALED WITH AN APPROVED WATERPROOF SILICONE SEALANT.
4. FOUNDATION LENGTH AND WIDTH SHALL PROJECT A MINIMUM 4" BEYOND ALL SIDES OF THE CABINET.
5. EXCAVATED AREAS SHALL BE BACKFILLED WITH AGGREGATE.
6. CF-1 FOUNDATION IS INTENDED FOR USE WITH TYPE "A" (NEMA TS-2) TRAFFIC SIGNAL EQUIPMENT CABINET.

SPECIFICATION REFERENCE	A COPY OF THE ORIGINAL SEALED AND SIGNED DRAWING IS ON FILE IN THE CENTRAL OFFICE.	VDOT ROAD AND BRIDGE STANDARDS	
700 703	CABINET FOUNDATION DETAILS TYPE A TRAFFIC SIGNAL EQUIPMENT VIRGINIA DEPARTMENT OF TRANSPORTATION	REVISION DATE 02/16	SHEET 1 OF 1 1301.10

CF-2

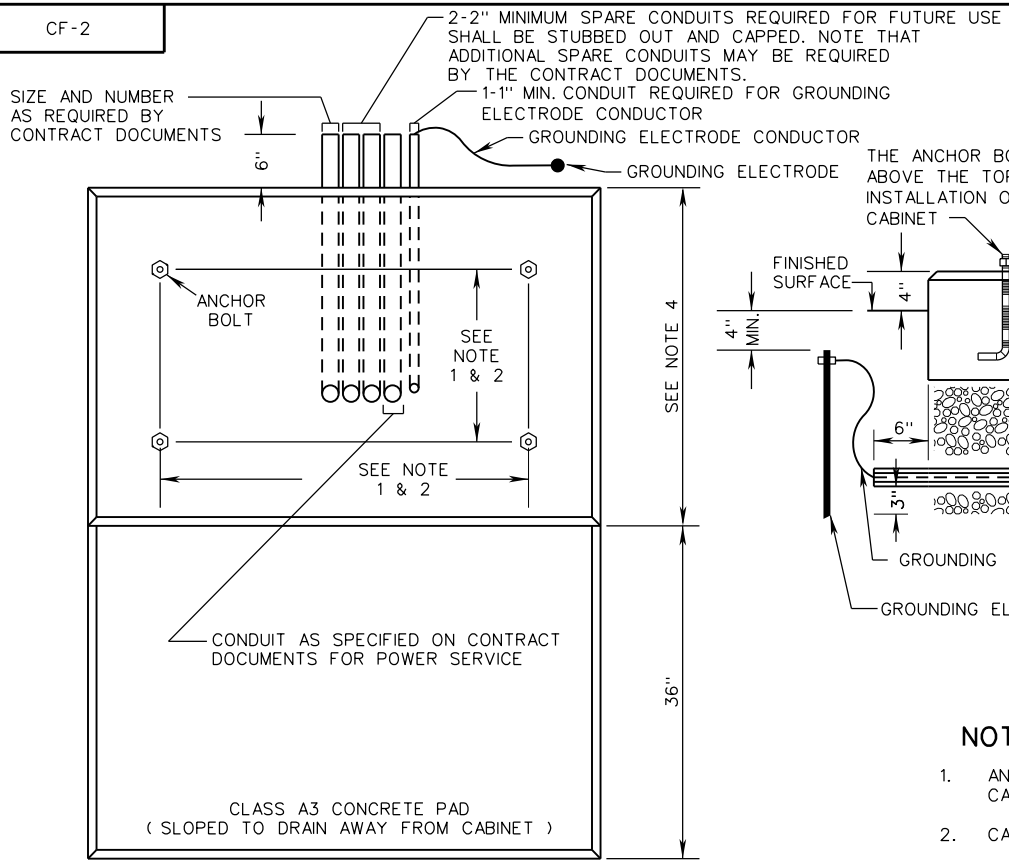

TOP VIEW

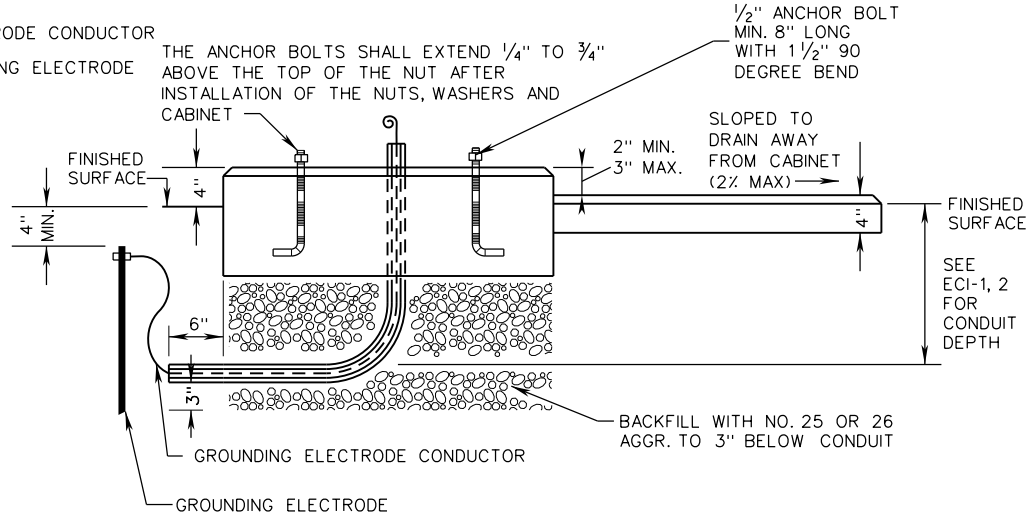

SIDE VIEW

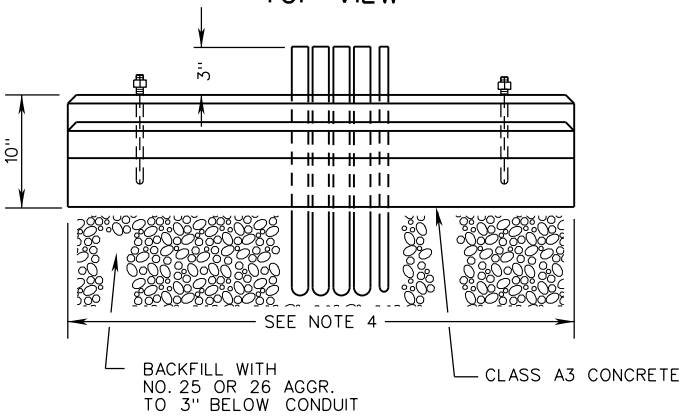

FRONT VIEW

NOTES:

1. ANCHOR BOLTS AND BOLT TEMPLATE SHALL BE FURNISHED WITH CABINET.
2. CABINET SHALL BE CENTERED ON FOUNDATION.
3. THE CONTROL CENTER CABINET AT THE INSIDE AND OUTSIDE FOUNDATION JOINTS SHALL BE SEALED WITH AN APPROVED WATERPROOF SILICONE SEALANT.
4. FOUNDATION LENGTH AND WIDTH SHALL PROJECT A MINIMUM 4" BEYOND ALL SIDES OF THE CABINET.
5. EXCAVATED AREAS SHALL BE BACKFILLED WITH AGGREGATE.
6. TYPE A AND TYPE B TRAFFIC SIGNAL CABINETS SHALL NOT BE INSTALLED ON CF-2 FOUNDATIONS.

VDOT ROAD AND BRIDGE STANDARDS	A COPY OF THE ORIGINAL SEALED AND SIGNED DRAWING IS ON FILE IN THE CENTRAL OFFICE.		SPECIFICATION REFERENCE
SHEET 1 OF 1	CABINET FOUNDATION DETAILS		700
1301.20	REVISION DATE 02/16	VIRGINIA DEPARTMENT OF TRANSPORTATION	

CF-3

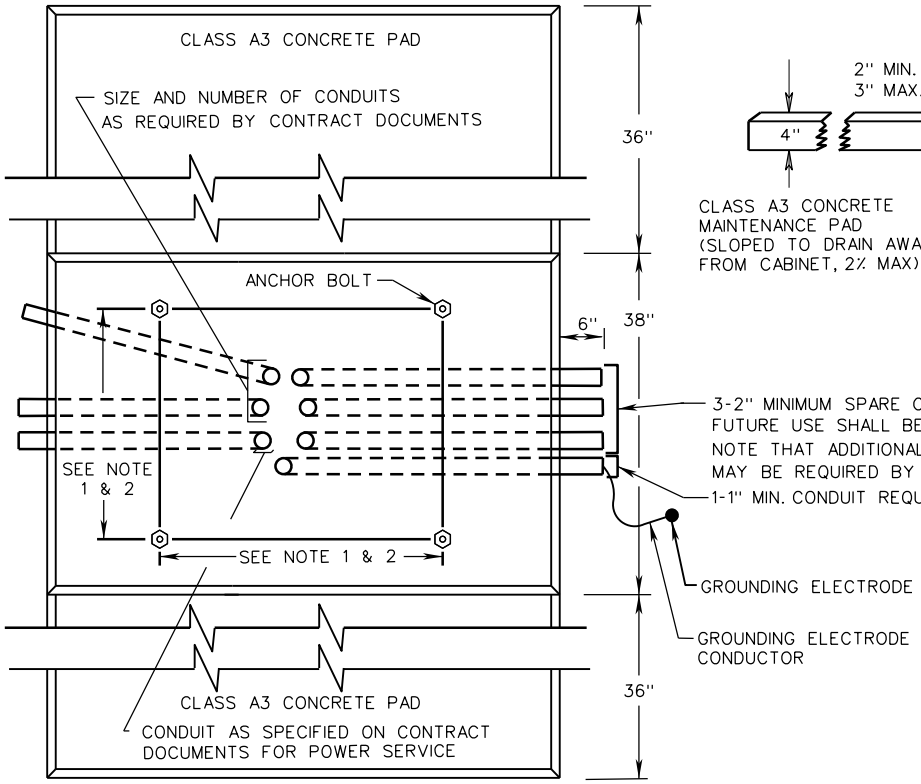

TOP VIEW

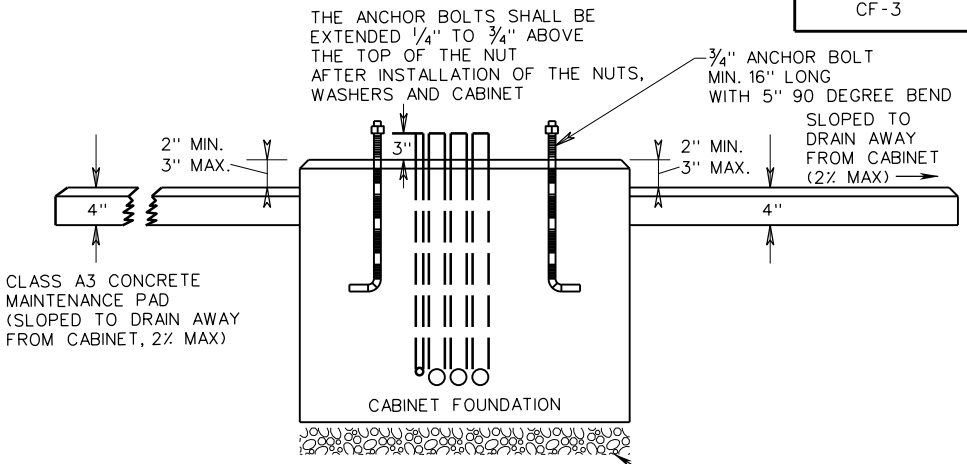

SIDE VIEW

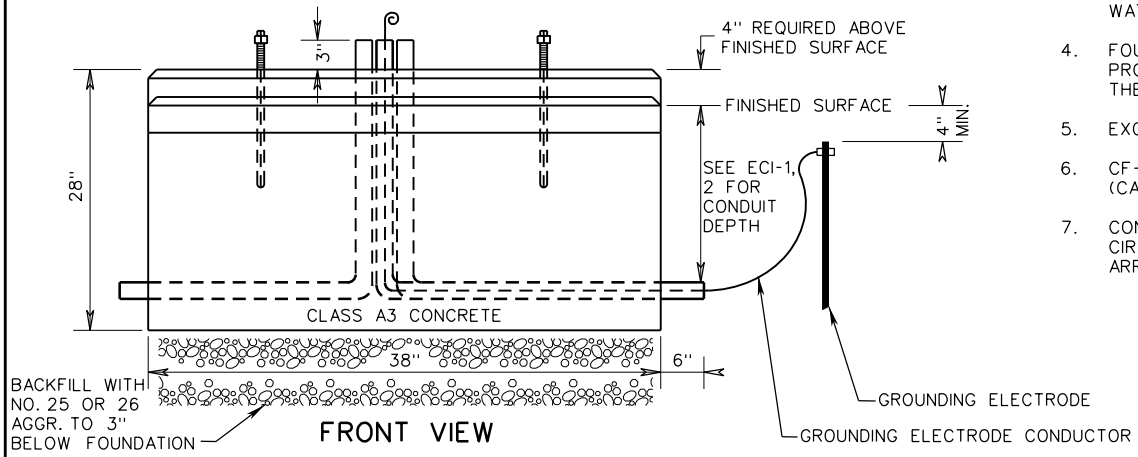

FRONT VIEW

NOTES:

1. ANCHOR BOLTS, BOLT TEMPLATE, AND BASE ADAPTER (METAL RISER) SHALL BE FURNISHED WITH CABINET.
2. CABINET ON BASE ADAPTER (METAL RISER) SHALL BE CENTERED ON FOUNDATION.
3. THE CONTROLLER CABINET AT THE INSIDE AND OUTSIDE FOUNDATION JOINTS SHALL BE SEALED WITH AN APPROVED WATERPROOF SILICONE SEALANT.
4. FOUNDATION LENGTH AND WIDTH SHALL BE AS REQUIRED TO PROJECT NO LESS THAN A MINIMUM 4" BEYOND ALL SIDES OF THE CABINET.
5. EXCAVATED AREAS SHALL BE BACKFILLED WITH AGGREGATE.
6. CF-3 FOUNDATION IS INTENDED FOR USE WITH TYPE "B" (CALTRANS MODEL 332) TRAFFIC SIGNAL EQUIPMENT CABINET.
7. CONDUITS ENTERING THE FOUNDATION SHALL BE ARRANGED IN A CIRCULAR PATTERN. THE CONTRACTOR SHALL SUBMIT A CONDUIT ARRANGEMENT PLAN FOR APPROVAL PRIOR TO PLACEMENT.

SPECIFICATION REFERENCE	A COPY OF THE ORIGINAL SEALED AND SIGNED DRAWING IS ON FILE IN THE CENTRAL OFFICE.	VDOT ROAD AND BRIDGE STANDARDS	
700 703	CABINET FOUNDATION DETAILS TYPE B TRAFFIC SIGNAL EQUIPMENT VIRGINIA DEPARTMENT OF TRANSPORTATION	REVISION DATE 02/16	SHEET 1 OF 2 1301.30

CF-3

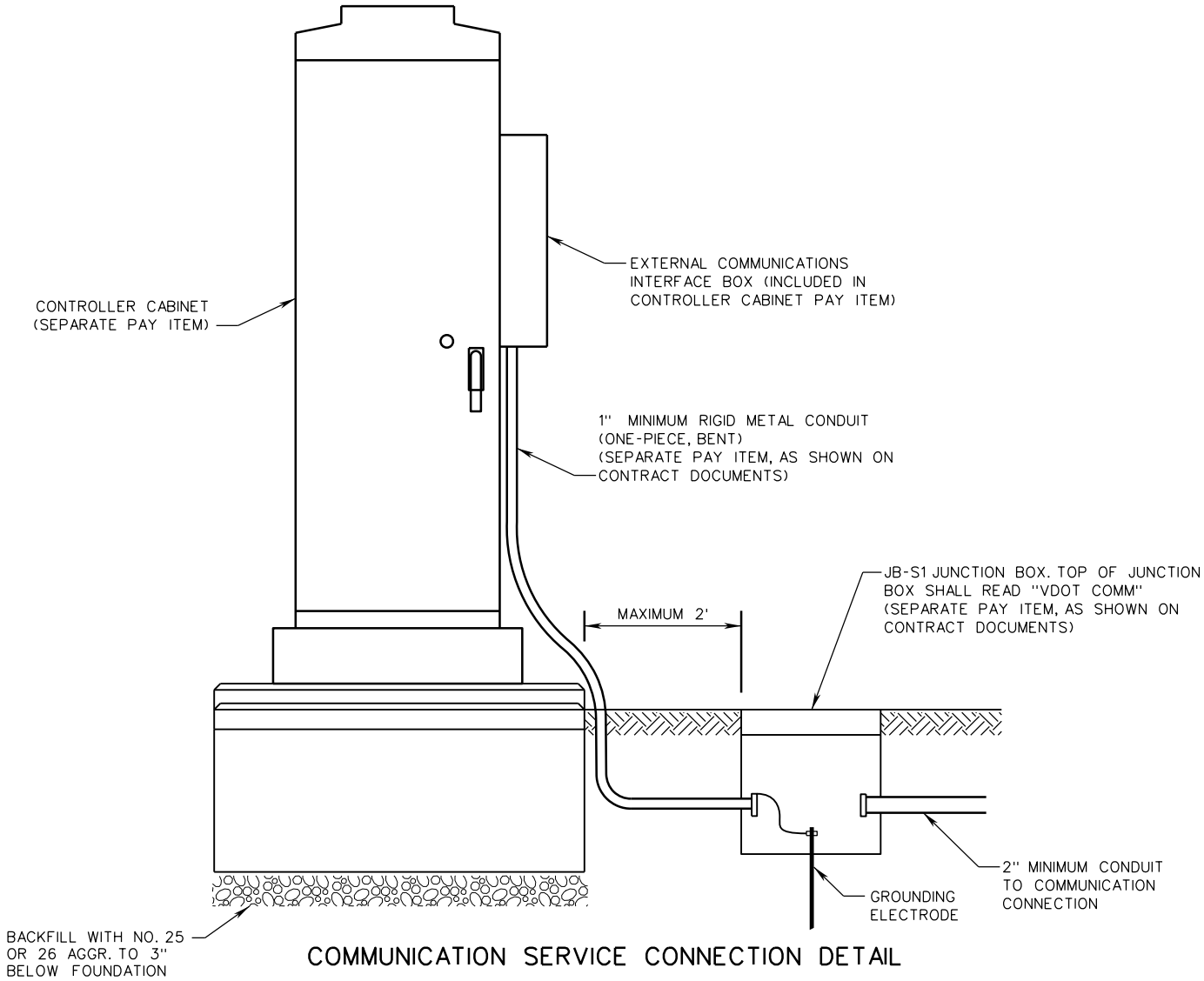

COMMUNICATION SERVICE CONNECTION DETAIL

VDOT ROAD AND BRIDGE STANDARDS	A COPY OF THE ORIGINAL SEALED AND SIGNED DRAWING IS ON FILE IN THE CENTRAL OFFICE.		SPECIFICATION REFERENCE
SHEET 2 OF 2	CABINET FOUNDATION DETAILS		
1301.31	REVISION DATE NEW 02/16	TYPE B TRAFFIC SIGNAL EQUIPMENT VIRGINIA DEPARTMENT OF TRANSPORTATION	700 703

STANDARD

THIS PAGE INTENTIONALLY LEFT BLANK

SPECIFICATION REFERENCE	TITLE VIRGINIA DEPARTMENT OF TRANSPORTATION	VDOT ROAD AND BRIDGE STANDARDS REVISION DATE	SHEET 1 OF 1 ____._

CF-4

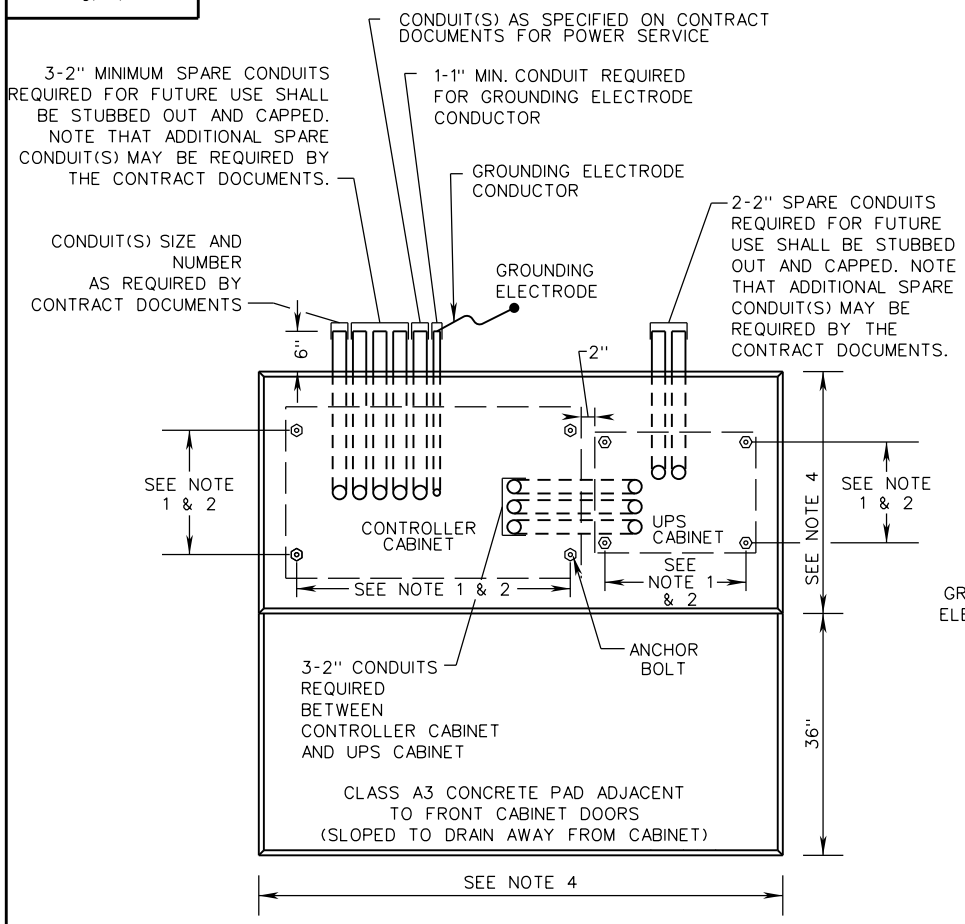

TOP VIEW

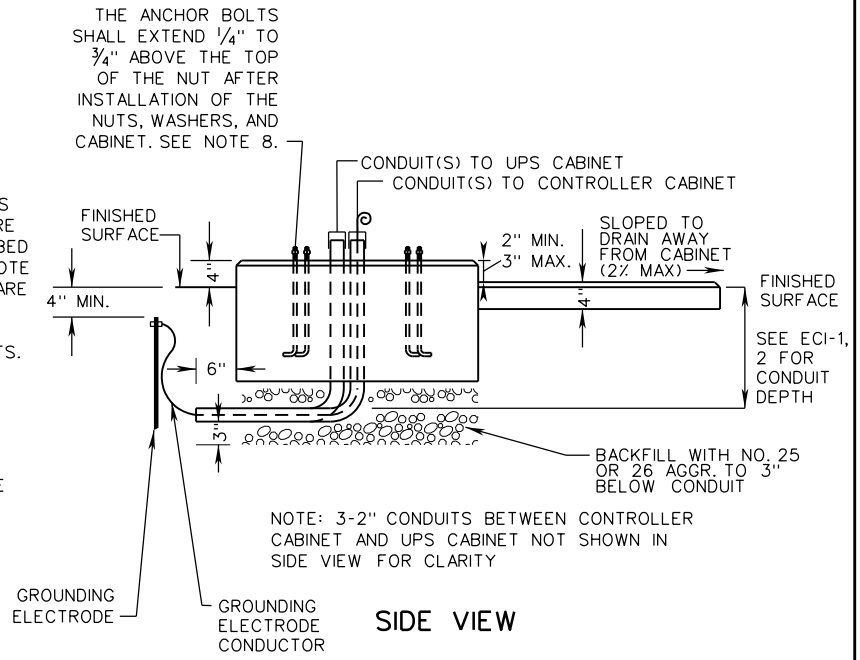

SIDE VIEW

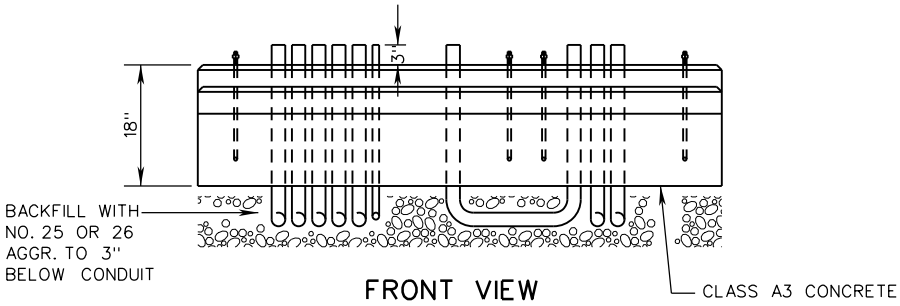

FRONT VIEW

NOTES:

1. ANCHOR BOLTS AND BOLT TEMPLATES SHALL BE FURNISHED WITH BOTH CABINETS.
2. THE CONTROLLER CABINET AND UPS CABINET SHALL BE CENTERED FROM FRONT TO BACK ON THE FOUNDATION. THE TOTAL WIDTH OF THE CONTROLLER CABINET AND UPS CABINET SHALL BE CENTERED FROM SIDE TO SIDE ON THE FOUNDATION.
3. THE CONTROLLER CABINET AND UPS CABINET AT THE INSIDE AND OUTSIDE FOUNDATION JOINTS SHALL BE SEALED WITH AN APPROVED WATERPROOF SILICONE SEALANT.
4. THE FOUNDATION WIDTH AND LENGTH SHALL PROJECT A MINIMUM 4" BEYOND ALL SIDES OF THE CABINETS.
5. EXCAVATED AREAS SHALL BE BACKFILLED WITH AGGREGATE.
6. CF-4 FOUNDATION IS INTENDED FOR USE WITH TYPE "A" (NEMA TS-2) TRAFFIC SIGNAL EQUIPMENT CABINET WITH SEPARATE UPS CABINET.
7. DOOR HINGE LOCATIONS SHALL BE IN ACCORDANCE WITH SECTION 703 OF THE SPECIFICATIONS.
8. EACH CABINET SHALL HAVE FOUR 3/4" DIA. X 16" LONG WITH 2" 90 DEGREE BEND ANCHOR BOLTS.

VDOT ROAD AND BRIDGE STANDARDS	A COPY OF THE ORIGINAL SEALED AND SIGNED DRAWING IS ON FILE IN THE CENTRAL OFFICE.		SPECIFICATION REFERENCE
SHEET 1 OF 1	CABINET FOUNDATION DETAILS		700
1301.40	TYPE A TRAFFIC SIGNAL EQUIPMENT CABINET AND UPS	REVISION DATE NEW 02/16	703
	VIRGINIA DEPARTMENT OF TRANSPORTATION		

MP-2

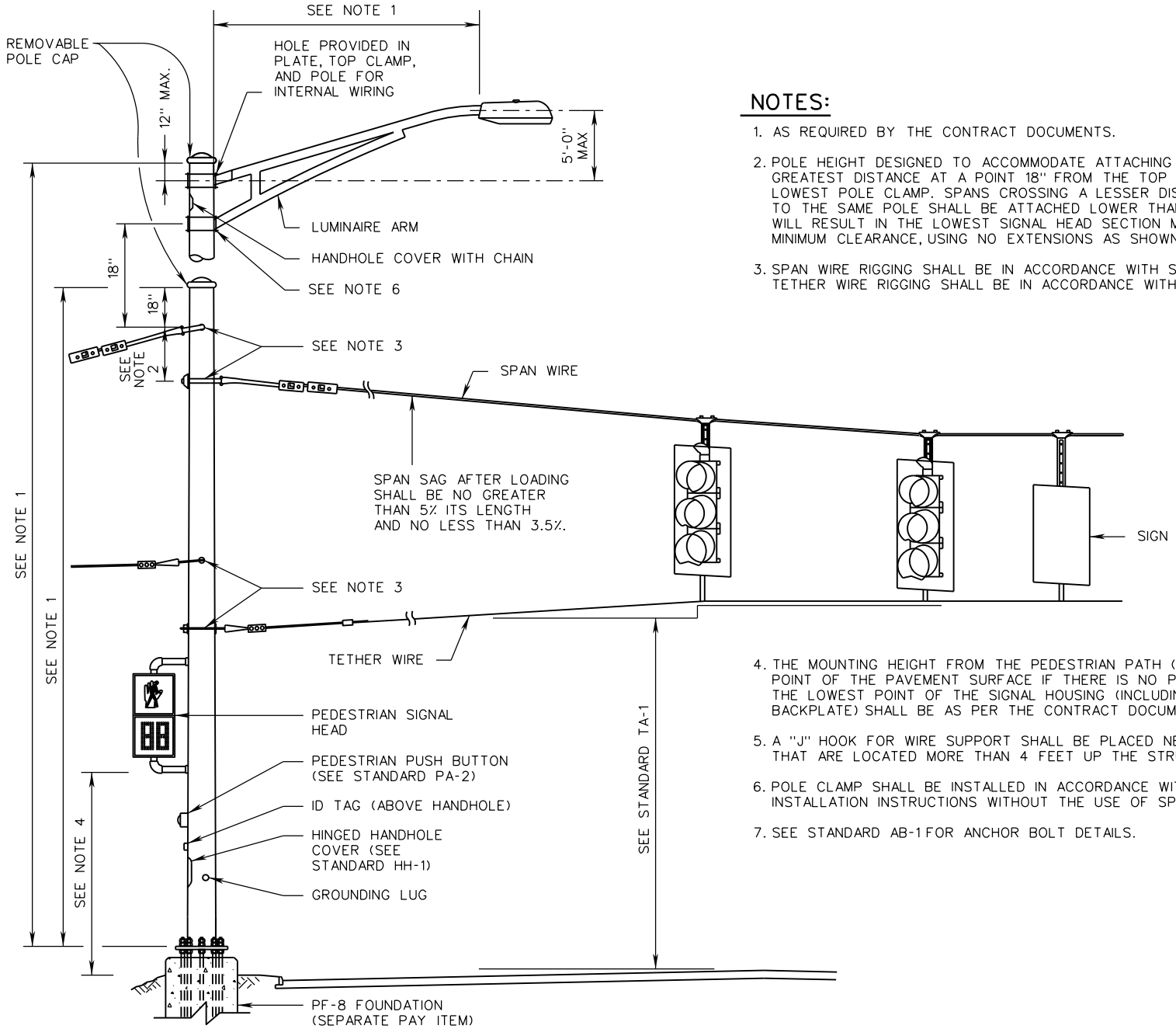

NOTES:

1. AS REQUIRED BY THE CONTRACT DOCUMENTS.
2. POLE HEIGHT DESIGNED TO ACCOMMODATE ATTACHING SPAN ACROSS THE GREATEST DISTANCE AT A POINT 18" FROM THE TOP OF THE POLE OR THE LOWEST POLE CLAMP. SPANS CROSSING A LESSER DISTANCE AND ATTACHED TO THE SAME POLE SHALL BE ATTACHED LOWER THAN 18" AS DOING SO WILL RESULT IN THE LOWEST SIGNAL HEAD SECTION MAINTAINING THE MINIMUM CLEARANCE, USING NO EXTENSIONS AS SHOWN BY STANDARD SW-1.
3. SPAN WIRE RIGGING SHALL BE IN ACCORDANCE WITH STANDARD WD-1. TETHER WIRE RIGGING SHALL BE IN ACCORDANCE WITH STANDARD TA-1.
4. THE MOUNTING HEIGHT FROM THE PEDESTRIAN PATH (OR THE HIGHEST POINT OF THE PAVEMENT SURFACE IF THERE IS NO PEDESTRIAN PATH) TO THE LOWEST POINT OF THE SIGNAL HOUSING (INCLUDING BRACKETS AND BACKPLATE) SHALL BE AS PER THE CONTRACT DOCUMENTS.
5. A "J" HOOK FOR WIRE SUPPORT SHALL BE PLACED NEAR ALL HANDHOLES THAT ARE LOCATED MORE THAN 4 FEET UP THE STRUCTURE.
6. POLE CLAMP SHALL BE INSTALLED IN ACCORDANCE WITH MANUFACTURER'S INSTALLATION INSTRUCTIONS WITHOUT THE USE OF SPACERS OR SHIMS.
7. SEE STANDARD AB-1 FOR ANCHOR BOLT DETAILS.

SPECIFICATION REFERENCE	A COPY OF THE ORIGINAL SEALED AND SIGNED DRAWING IS ON FILE IN THE CENTRAL OFFICE.	VDOT ROAD AND BRIDGE STANDARDS	
700	STEEL STRAIN POLE DETAILS STRAIN AND COMBINATION LUMINAIRE STRAIN POLE VIRGINIA DEPARTMENT OF TRANSPORTATION	REVISION DATE 08/17	SHEET 1 OF 1 1302.20

MP-3

NOTES:

1. AS REQUIRED BY THE SPECIFICATIONS.
2. SIGNAL WIRING HOLE SHALL BE LOCATED ON THE BOTTOM OF THE ARM DIRECTLY BEHIND THE HANGER ASSEMBLY WHEN STANDARD SM-3 HANGER ASSEMBLIES ARE REQUIRED. SIGNAL WIRING SHALL BE CONCEALED IN THE STANDARD SM-3 HANGER ASSEMBLIES.
3. THE ALIGNMENT OF THE LUMINAIRE ARM SHALL BE AS SHOWN IN THE CONTRACT DOCUMENTS.
4. AFTER THE LOADS ARE APPLIED, THE VERTICAL CLEARANCE FROM THE HIGHEST POINT OF THE PAVEMENT SURFACE SHALL BE:
   A. 16' MINIMUM (15' MINIMUM FOR MAINTENANCE ACTIVITIES) TO THE LOWEST POINT OF THE SIGNAL HEAD ASSEMBLIES (INCLUDING BACKPLATES) AND SIGNS.
   B. 25' MAXIMUM TO THE TOPS OF THE SIGNAL HOUSINGS.
5. THE MOUNTING HEIGHT FROM THE PEDESTRIAN PATH (OR THE HIGHEST POINT OF THE PAVEMENT SURFACE IF THERE IS NO PEDESTRIAN PATH) TO THE LOWEST POINT OF THE SIGNAL HOUSING (INCLUDING BRACKETS AND BACKPLATE) SHALL BE AS PER THE CONTRACT DOCUMENTS.
6. A "J" HOOK FOR WIRE SUPPORT SHALL BE PLACED NEAR ALL HANDHOLES THAT ARE LOCATED MORE THAN 4 FEET UP THE STRUCTURE.
7. MAST ARMS MAY BE SPLICED. IF SPLICED, FIELD ASSEMBLY SHALL ACHIEVE A SNUG TIGHT JOINT. MATING SURFACES SHALL BE SMOOTH AND FREE OF BURRS, DENTS, OR LUMPS OF ZINC.
8. POLE CLAMP SHALL BE INSTALLED IN ACCORDANCE WITH MANUFACTURER'S INSTALLATION INSTRUCTIONS WITHOUT THE USE OF SPACERS OR SHIMS.
9. MAST ARMS SHALL BE CONNECTED TO THE POLE USING THRU-BOLTS. NEITHER WELDED STUDS NOR THREADED PLATES WILL BE ALLOWED.
10. DUAL MAST ARM CONNECTIONS MAY BE MADE BY USING TWO SINGLE ARM CONNECTIONS WITH THE LONGER MAST ARM ON THE BOTTOM.
11. HANDHOLES SHALL ONLY BE PROVIDED FOR COMBINATION MAST ARM / LUMINAIRE ARM POLES.

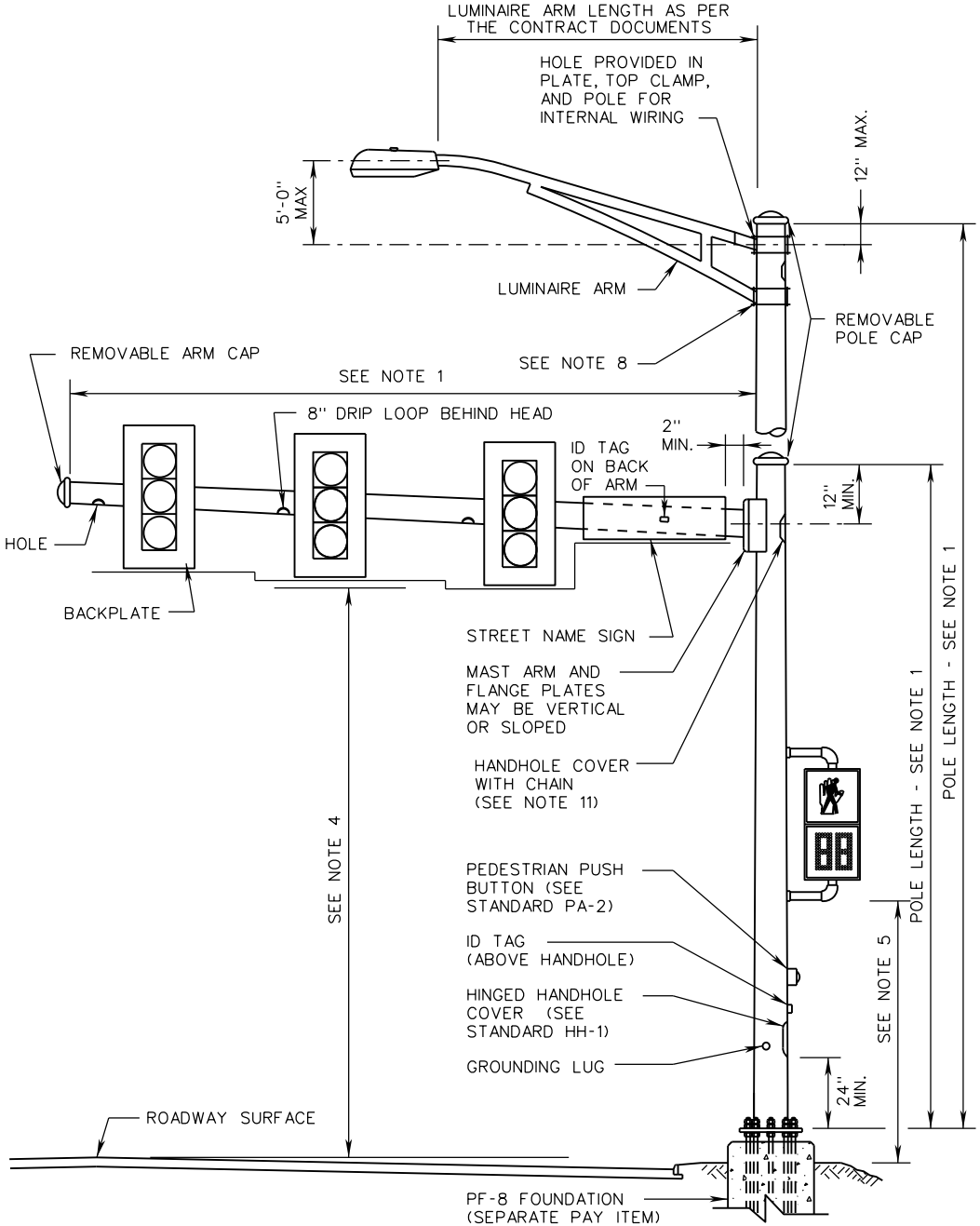

VDOT ROAD AND BRIDGE STANDARDS	A COPY OF THE ORIGINAL SEALED AND SIGNED DRAWING IS ON FILE IN THE CENTRAL OFFICE.		SPECIFICATION REFERENCE
SHEET 1 OF 4	SIGNAL POLE DETAILS		
1302.24	MAST ARM AND COMBINATION LUMINAIRE MAST ARM POLE	REVISION DATE 09/18	700
	VIRGINIA DEPARTMENT OF TRANSPORTATION		

NOTES:

1. THESE LOADING REQUIREMENTS SHALL BE USED FOR THE DESIGN OF ALL NEW MAST ARM STRUCTURES, EXCEPT IN THE FOLLOWING SITUATIONS WHERE THE STRUCTURE SHALL REQUIRE A PROJECT-SPECIFIC DESIGN:
   - THE WIND LOADS OR DEAD LOADS ON THE MAST ARM STRUCTURE SPECIFIED ON THE PLANS WILL EXCEED WHAT IS SHOWN ON THIS STANDARD FOR THE PROPOSED ARM LENGTH.
   - THE STRUCTURE IS A DUAL ARM STRUCTURE WHERE THE ARMS ARE NOT AT 90 DEGREES TO EACH OTHER.
2. EMERGENCY VEHICLE PREEMPTION DEVICES, PEDESTRIAN PUSH BUTTONS, AND ANTENNAE SHALL BE CONSIDERED TO HAVE NEGLIGIBLE WEIGHT AND SURFACE AREA FOR THE PURPOSES OF STRUCTURAL DESIGN OF THE MAST ARM POLES AND FOUNDATIONS.
3. FOR DUAL MAST ARM STRUCTURES WITH TWO ARMS AT 90 DEGREES TO EACH OTHER, THE POLE AND FOUNDATION SHALL BE DESIGNED FOR THE WORST-CASE DEAD LOAD AND WIND LOAD CONDITIONS FROM EITHER ARM.
4. FOR THE PURPOSES OF WIND LOAD ANALYSIS, ALL LOADS SHALL BE TREATED AS IF THEY ARE POINTED IN THE SAME DIRECTION (FACING WIND). THERE SHALL BE NO DEDUCTIONS FOR DEVICES MOUNTED AT ANGLES.
5. THE AREAS PROVIDED DO NOT TAKE INTO ACCOUNT THE WIND DRAG COEFFICIENT.
6. UNLESS SPECIFIED OTHERWISE IN THE CONTRACT DOCUMENTS, EQUIPMENT LOADS AND SIZES SHOWN IN THIS STANDARD SHALL BE USED FOR THE STRUCTURE AND FOUNDATION DESIGN, EVEN IF LIGHTER LOADS OR SMALLER EQUIPMENT SIZES ARE PROPOSED.

DEVICE		SURFACE AREA (SEE NOTES 5 & 6)	DEAD LOAD (SEE NOTE 6)
	3-SECTION SIGNAL HEAD W/ BACKPLATE	8.7 SF	65 LBS
	4-SECTION SIGNAL HEAD W/ BACKPLATE	11.0 SF	80 LBS
	5-SECTION SIGNAL HEAD W/ BACKPLATE (IN-LINE)	13.4 SF	95 LBS
	5-SECTION SIGNAL HEAD W/ BACKPLATE (DOGHOUSE/CLUSTER)	13.75 SF	105 LBS
	SP-9 PEDESTRIAN SIGNAL HEAD	2.4 SF	30 LBS
Ⓐ	30" x 36" SIGN	7.5 SF	22.5 LBS
Ⓑ	36" x 42" SIGN	10.5 SF	26.7 LBS
Ⓒ	12' x 2.5' STREET NAME SIGN	30 SF	66 LBS
Ⓓ	15' x 2.5' STREET NAME SIGN	37.5 SF	88.5 LBS
	VIDEO CAMERA	1.00 SF	22 LBS

SPECIFICATION REFERENCE

700

A COPY OF THE ORIGINAL SEALED AND SIGNED DRAWING IS ON FILE IN THE CENTRAL OFFICE.

SIGNAL POLE DETAILS

MAST ARM SIGNAL POLE MAXIMUM LOADING STANDARDS

VIRGINIA DEPARTMENT OF TRANSPORTATION

VDOT

ROAD AND BRIDGE STANDARDS

REVISION DATE NEW 02/16

SHEET 2 OF 4

1302.25

MP-3

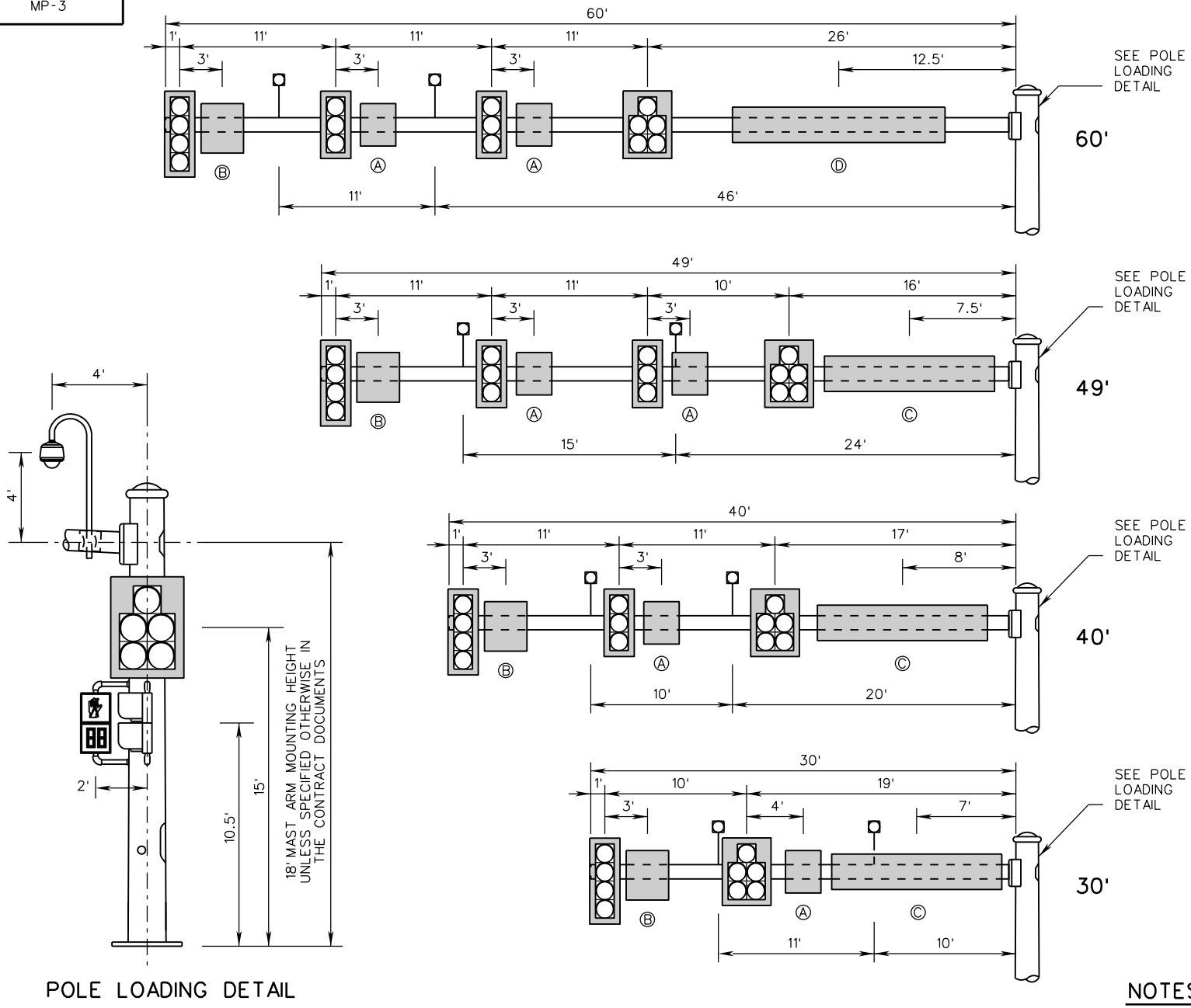

POLE LOADING DETAIL

NOTES:

SEE SHEET 2 FOR NOTES.

VDOT ROAD AND BRIDGE STANDARDS	A COPY OF THE ORIGINAL SEALED AND SIGNED DRAWING IS ON FILE IN THE CENTRAL OFFICE.	SPECIFICATION REFERENCE
SHEET 3 OF 4	SIGNAL POLE DETAILS	700
1302.26	MAST ARM SIGNAL POLE MAXIMUM LOADING STANDARDS	
REVISION DATE NEW 02/16	VIRGINIA DEPARTMENT OF TRANSPORTATION	

MP-3

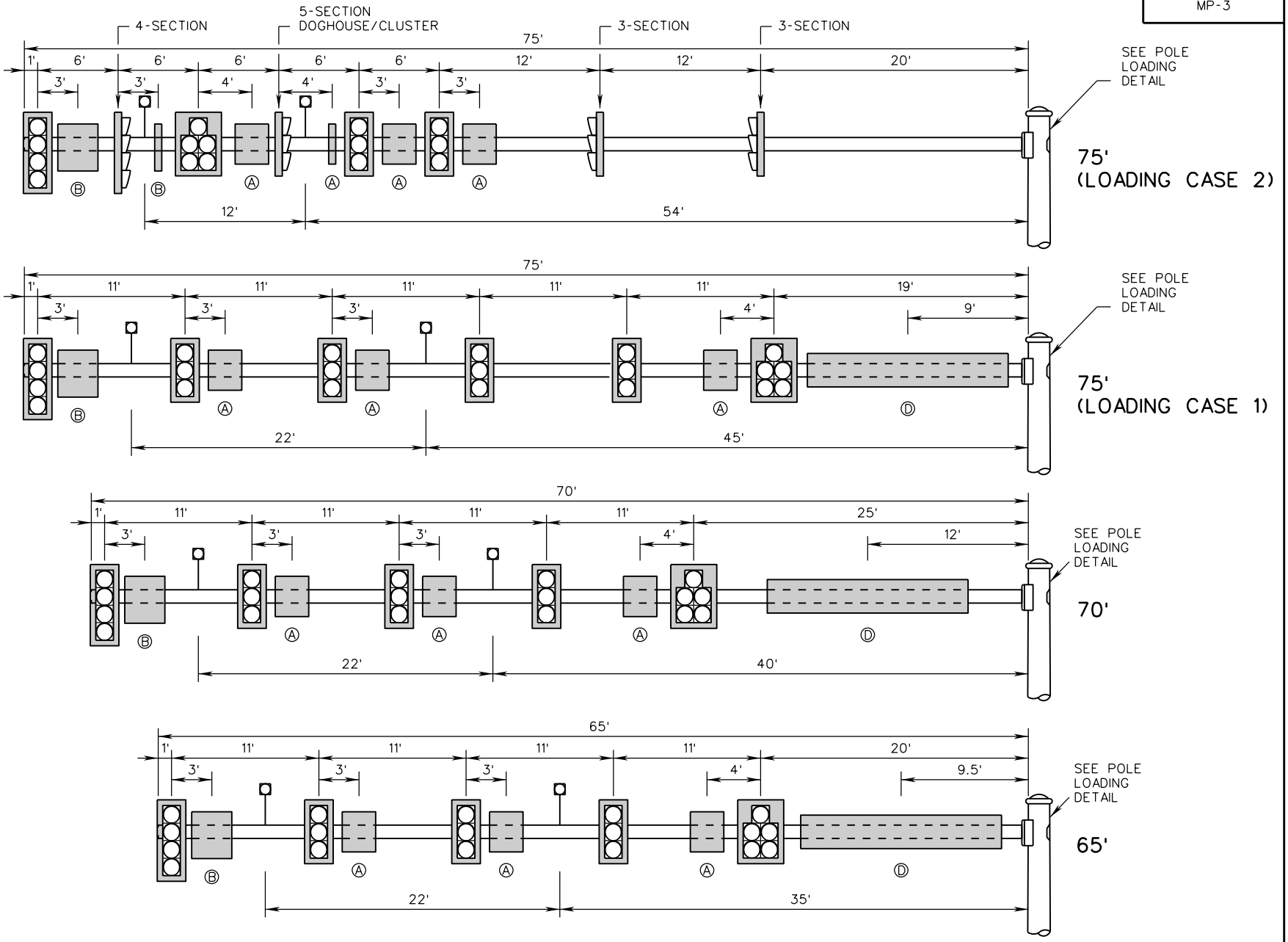

NOTES:

SEE SHEET 2 FOR NOTES.

SPECIFICATION REFERENCE	A COPY OF THE ORIGINAL SEALED AND SIGNED DRAWING IS ON FILE IN THE CENTRAL OFFICE.	VDOT ROAD AND BRIDGE STANDARDS	
700	SIGNAL POLE DETAILS MAST ARM SIGNAL POLE MAXIMUM LOADING STANDARDS VIRGINIA DEPARTMENT OF TRANSPORTATION	REVISION DATE 08/17	SHEET 4 OF 4 1302.27

PF-2

NOTES:

1. THIS STANDARD SHALL ONLY BE USED TO SUPPORT VEHICULAR AND PEDESTRIAN SIGNAL HEADS, PUSH BUTTONS, AND/OR SIGNS 36" IN WIDTH OR LESS, INCLUDING DIAMOND WARNING SIGNS WITH 36" OR LESS EDGE LENGTH.
2. EACH FOUNDATION SHALL BE PERMANENTLY MARKED TO INDICATE ALL SIDES FROM WHICH CONDUITS PASS. THIS MARK SHALL BE MADE WITH A TROWEL WHEN FINISHING THE CONCRETE AND SHALL BE 1/4" DEEP AND 4" TO 6" LONG.
3. PEDESTAL POLE SHALL HAVE A BREAKAWAY TRANSFORMER TYPE BASE. THE TRANSFORMER BASE SHALL BE INSTALLED PER THE MANUFACTURER'S INSTALLATION INSTRUCTIONS.
4. SEE PEDESTRIAN ACTUATION STANDARDS FOR DETAILS.
5. PEDESTAL POLE LENGTH SHALL BE AS SPECIFIED IN THE CONTRACT DOCUMENTS. PEDESTAL POLE LENGTH SHALL NOT EXCEED 15 FEET.
6. MOUNTING HEIGHT SHALL BE AS SPECIFIED IN THE CONTRACT DOCUMENTS.
7. STRUCTURAL TUBE MATERIAL SHALL BE ALUMINUM 6061-T6 WITH MINIMUM 0.337" WALL THICKNESS.

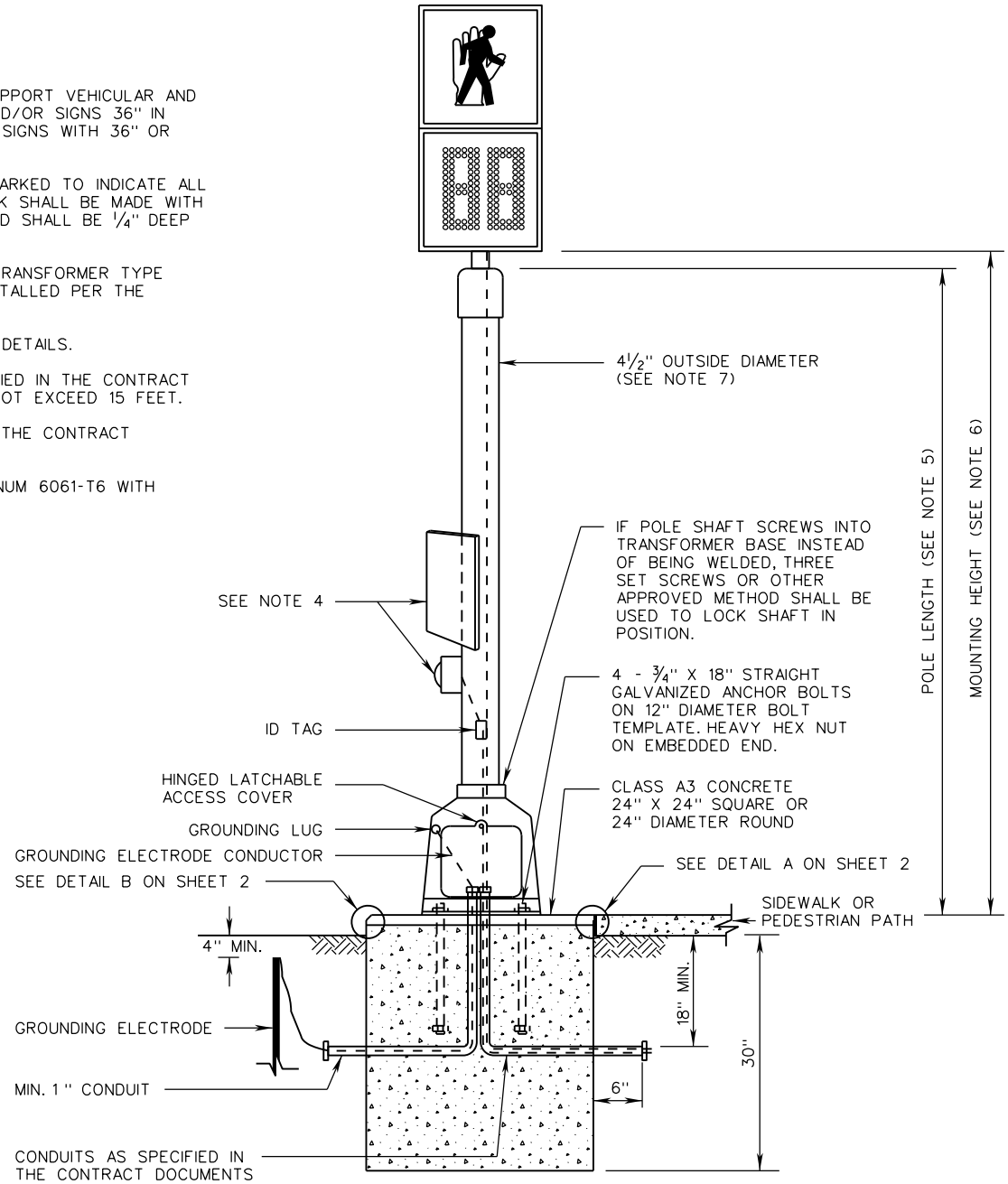

A COPY OF THE ORIGINAL SEALED AND SIGNED DRAWING IS ON FILE IN THE CENTRAL OFFICE.

VDOT ROAD AND BRIDGE STANDARDS	PEDESTAL POLE AND FOUNDATION DETAILS	SPECIFICATION REFERENCE
SHEET 1 OF 2	VIRGINIA DEPARTMENT OF TRANSPORTATION	700
1302.30	REVISION DATE 07/16	

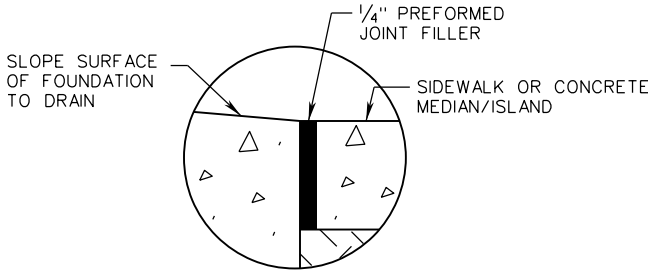

DETAIL A
SIDEWALK OR CONCRETE MEDIAN/ISLAND

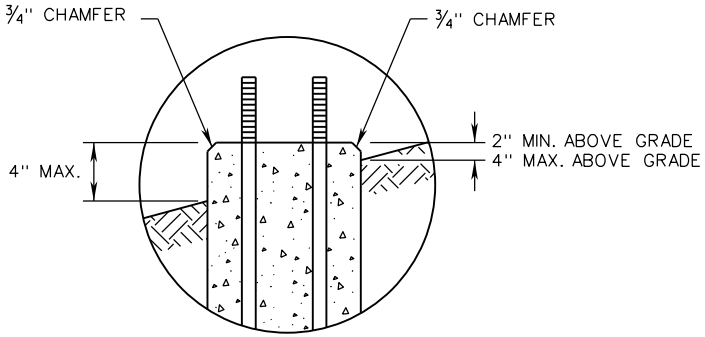

DETAIL B
BREAKAWAY BASE

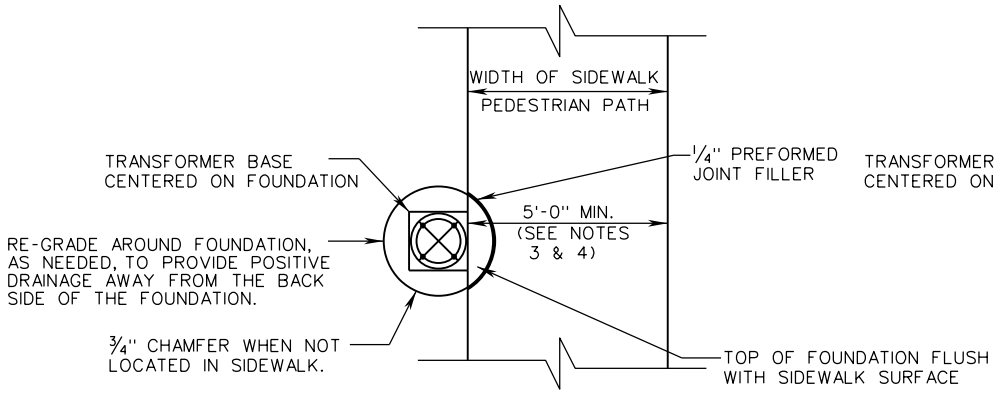

DETAIL A PLAN VIEW
AT SIDEWALK / PEDESTRIAN PATH

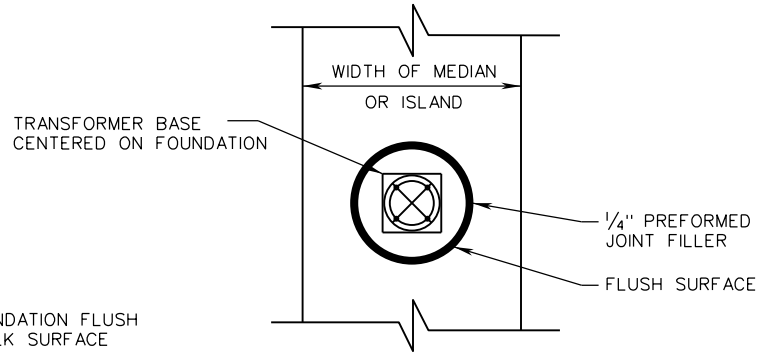

PLAN VIEW
OF DETAIL A
AT CONCRETE MEDIAN/ISLAND

NOTES:

1. WHEN FOUNDATION IS ADJACENT TO THE BACK EDGE OF SIDEWALK BUT NOT WITHIN THE SIDEWALK, THE TOP OF THE FOUNDATION SHALL BE ELEVATED 2 INCHES MINIMUM ABOVE THE SIDEWALK GRADE.
2. ROUND FOUNDATIONS ARE SHOWN, HOWEVER SQUARE FOUNDATIONS ARE ACCEPTABLE AND SHALL FOLLOW THE SAME REQUIREMENTS.
3. THE TOP OF FOUNDATION SHALL BE FLUSH WITH THE SIDEWALK SURFACE WHEN INCLUDED IN THE 5'-0" MINIMUM SIDEWALK/ PEDESTRIAN PATH.
4. THE 5'-0" MINIMUM SIDEWALK/ PEDESTRIAN PATH WIDTH WILL BE MEASURED FROM THE BOTTOM OF THE TRANSFORMER BASE.

SPECIFICATION REFERENCE	A COPY OF THE ORIGINAL SEALED AND SIGNED DRAWING IS ON FILE IN THE CENTRAL OFFICE.	VDOT ROAD AND BRIDGE STANDARDS	
700	PEDESTAL POLE AND FOUNDATION INSTALLATION DETAILS VIRGINIA DEPARTMENT OF TRANSPORTATION	REVISION DATE 09/18	SHEET 2 OF 2 1302.31

STANDARD

THIS PAGE INTENTIONALLY LEFT BLANK

VDOT
ROAD AND BRIDGE STANDARDS

SHEET 1 OF 1

REVISION DATE

TITLE

VIRGINIA DEPARTMENT OF TRANSPORTATION

SPECIFICATION REFERENCE

HH-1

NOTES:

1. HANDHOLES AT LOCATIONS NOT SHOWN SHALL BE 3" X 5" MINIMUM.
2. HANDHOLES WITHIN 10 FEET OF THE GROUND LINE SHALL BE HINGED AND LATCHABLE, WITH AN APPROVED LATCHING MECHANISM.

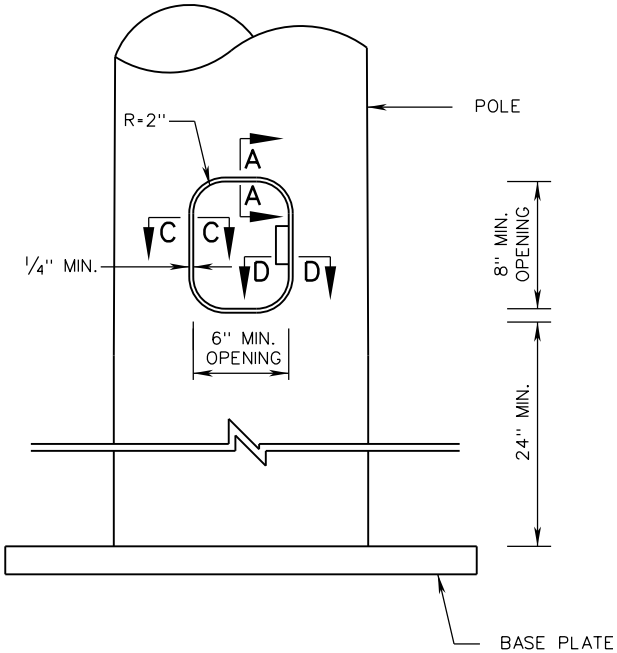

SIGNAL POLE / SIGN STRUCTURE ELEVATION VIEW

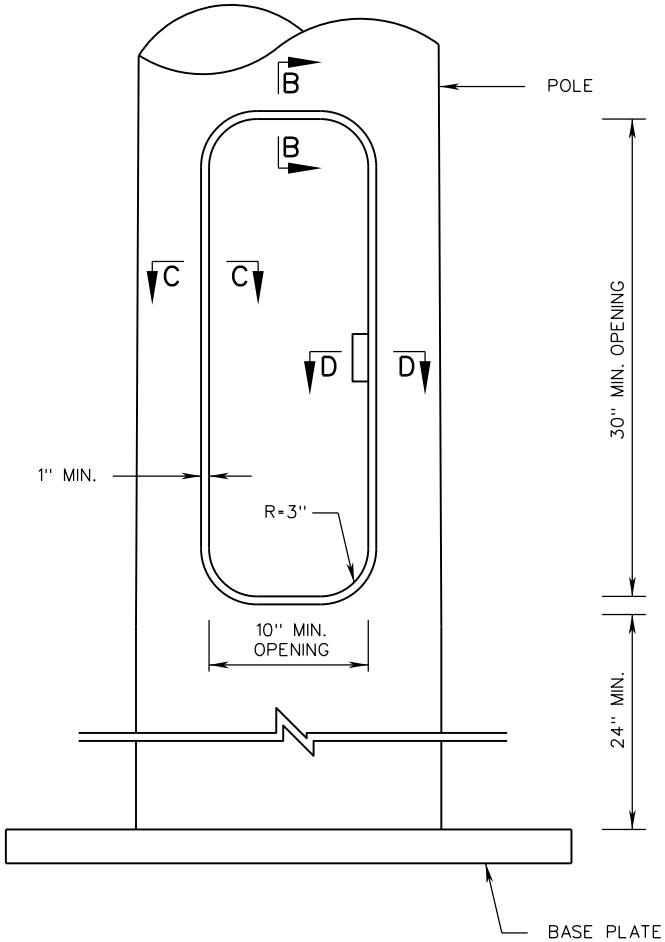

HIGH MAST LIGHT POLE ELEVATION VIEW

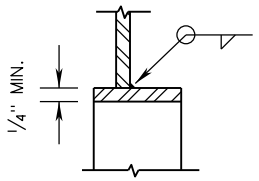

SECTION A-A

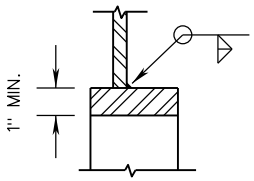

SECTION B-B

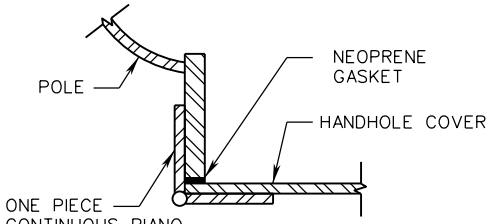

SECTION C-C

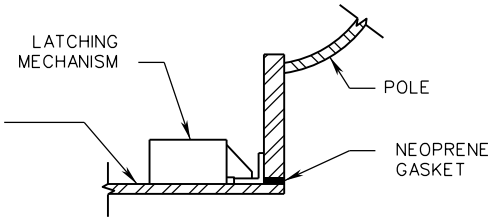

SECTION D-D

A COPY OF THE ORIGINAL SEALED AND SIGNED DRAWING IS ON FILE IN THE CENTRAL OFFICE.

SPECIFICATION REFERENCE	HANDHOLE DETAILS	VDOT ROAD AND BRIDGE STANDARDS	
700	VIRGINIA DEPARTMENT OF TRANSPORTATION	REVISION DATE NEW 07/16	SHEET 1 OF 1
			1302.40

AB-1

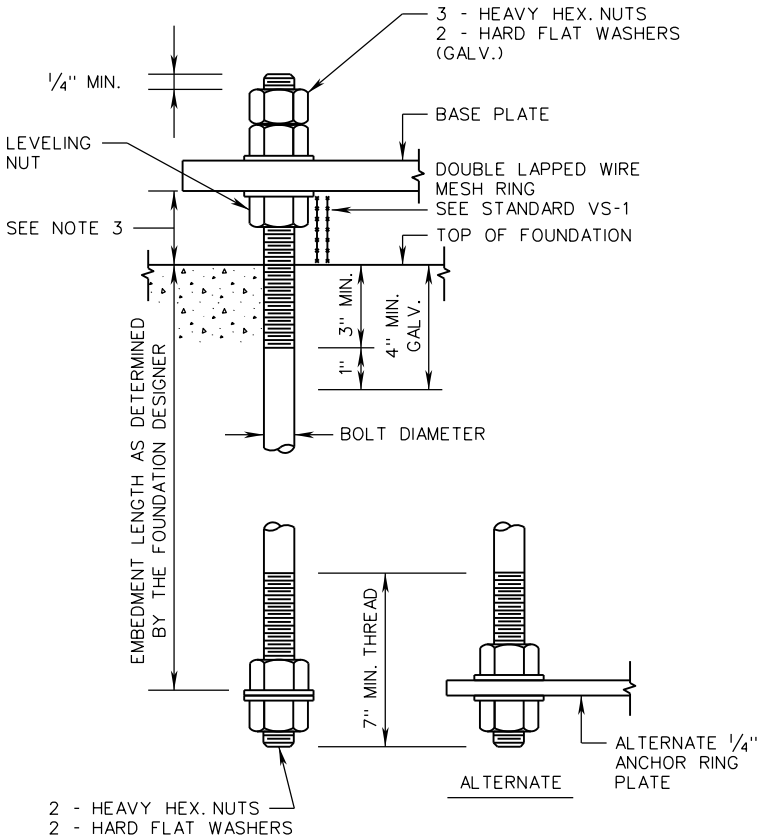

ANCHOR BOLT DETAIL

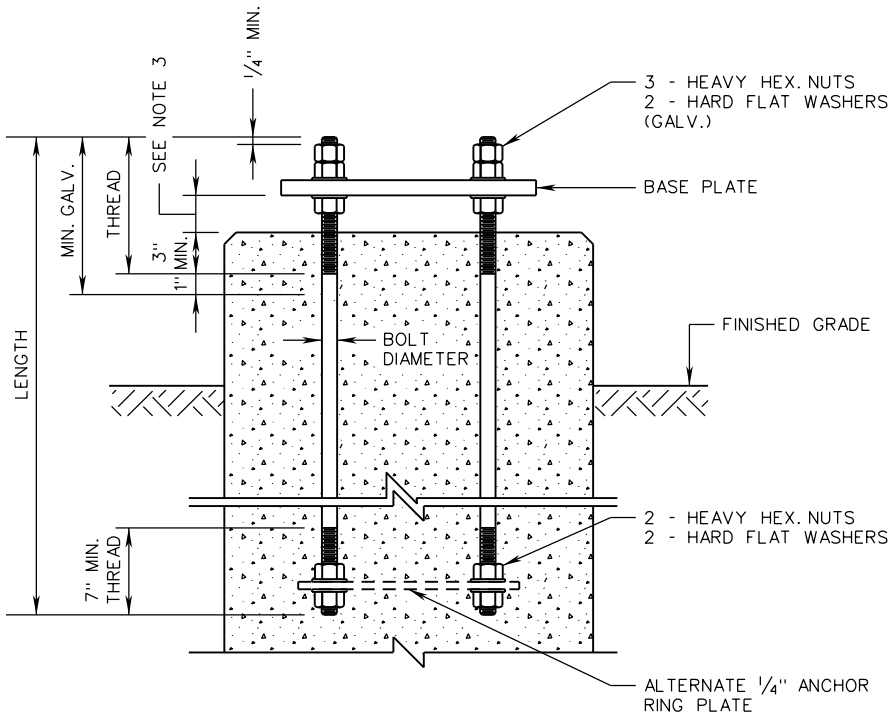

ANCHORAGE DETAIL

NOTES:

1. PROVIDE 5 NUTS AND 4 WASHERS PER ANCHOR BOLT. SEE SPECIFICATIONS FOR NUT INSTALLATION PROCEDURE.
2. CONDUITS AND REINFORCING STEEL NOT SHOWN FOR CLARITY.
3. DISTANCE BETWEEN BOTTOM OF BASE PLATE AND TOP OF FOUNDATION SHALL BE NO GREATER THAN THE DIAMETER OF ANCHOR BOLT PLUS ONE INCH.
4. THIS STANDARD DOES NOT APPLY TO STRUCTURES MOUNTED ATOP TRANSFORMER BASES.

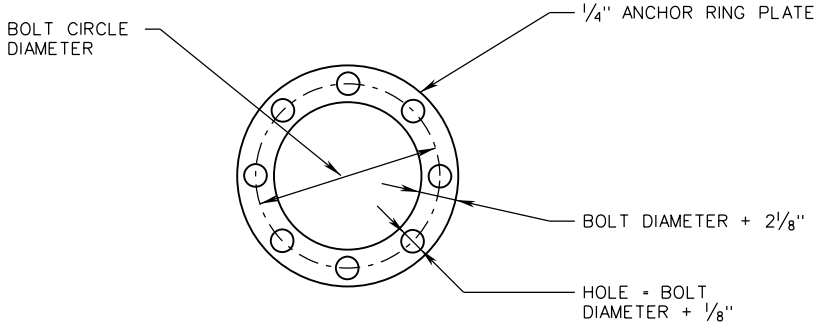

ALTERNATE ANCHOR RING PLATE DETAIL

VDOT ROAD AND BRIDGE STANDARDS	A COPY OF THE ORIGINAL SEALED AND SIGNED DRAWING IS ON FILE IN THE CENTRAL OFFICE.		SPECIFICATION REFERENCE
SHEET 1 OF 1	ANCHOR BOLTS		700
1302.50	INSTALLATION DETAILS	REVISION DATE 08/17	
	VIRGINIA DEPARTMENT OF TRANSPORTATION		

VS-1

NOTES:

1. WIRE MESH RING SHALL BE 1/8" WOVEN HARDWARE CLOTH 27 GAGE (COMMERCIAL GRADE) HOT DIPPED GALVANIZED. DOUBLE LAP MESH AND SECURE WITH PLASTIC COATED WIRE TWIST TIES. LENGTH AND HEIGHT DETERMINED BY FIELD MEASUREMENTS.
2. WIRE MESH RING SHALL BE PLACED INSIDE THE BOLT CIRCLE BEFORE THE POLE IS ERECTED AND PLUMBED.
3. WIRE MESH RING SHALL BE COMPRESSED BETWEEN POLE BASE PLATE, CONCRETE FOUNDATION, AND BOLTS. ENSURE THE WIRE MESH RING WILL REMAIN IN PLACE AND ANY ACCESS THROUGH THE POLE BASE PLATE OPENING IS ELIMINATED.
4. WELDING OR DRILLING IS NOT PERMITTED ON BASE PLATE OF POLE.
5. CONDUITS NOT SHOWN FOR CLARITY.
6. THIS STANDARD DOES NOT APPLY TO STRUCTURES MOUNTED ATOP TRANSFORMER BASES.

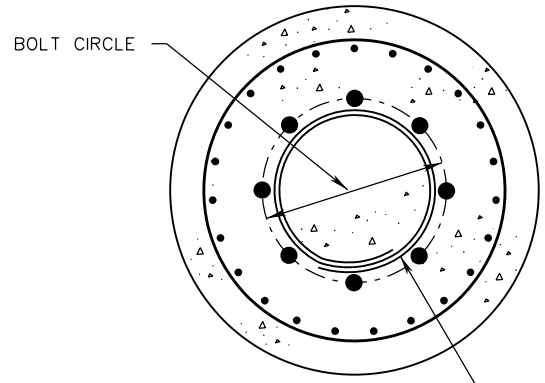

PLAN VIEW

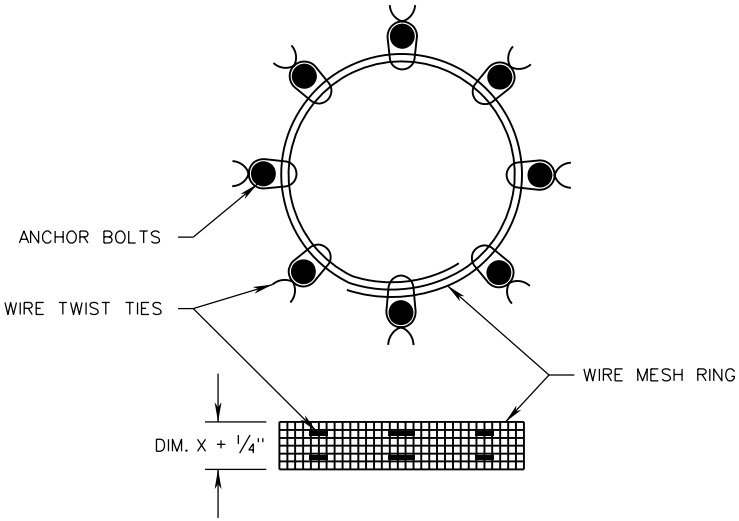

DETAIL A

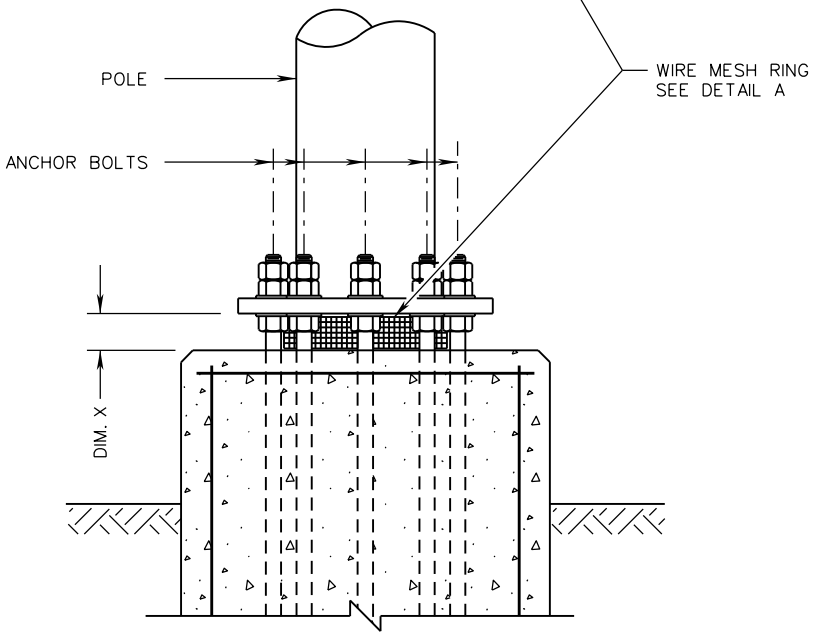

VENTED VARMINT SCREEN

SPECIFICATION REFERENCE	A COPY OF THE ORIGINAL SEALED AND SIGNED DRAWING IS ON FILE IN THE CENTRAL OFFICE.	VDOT ROAD AND BRIDGE STANDARDS
700	VENTED VARMINT SCREEN DETAILS VIRGINIA DEPARTMENT OF TRANSPORTATION	REVISION DATE 08/17 — SHEET 1 OF 1 — 1302.60

STANDARD

THIS PAGE INTENTIONALLY LEFT BLANK

VDOT
ROAD AND BRIDGE STANDARDS

SHEET 1 OF 1

REVISION DATE

TITLE

VIRGINIA DEPARTMENT OF TRANSPORTATION

SPECIFICATION REFERENCE

SW-1

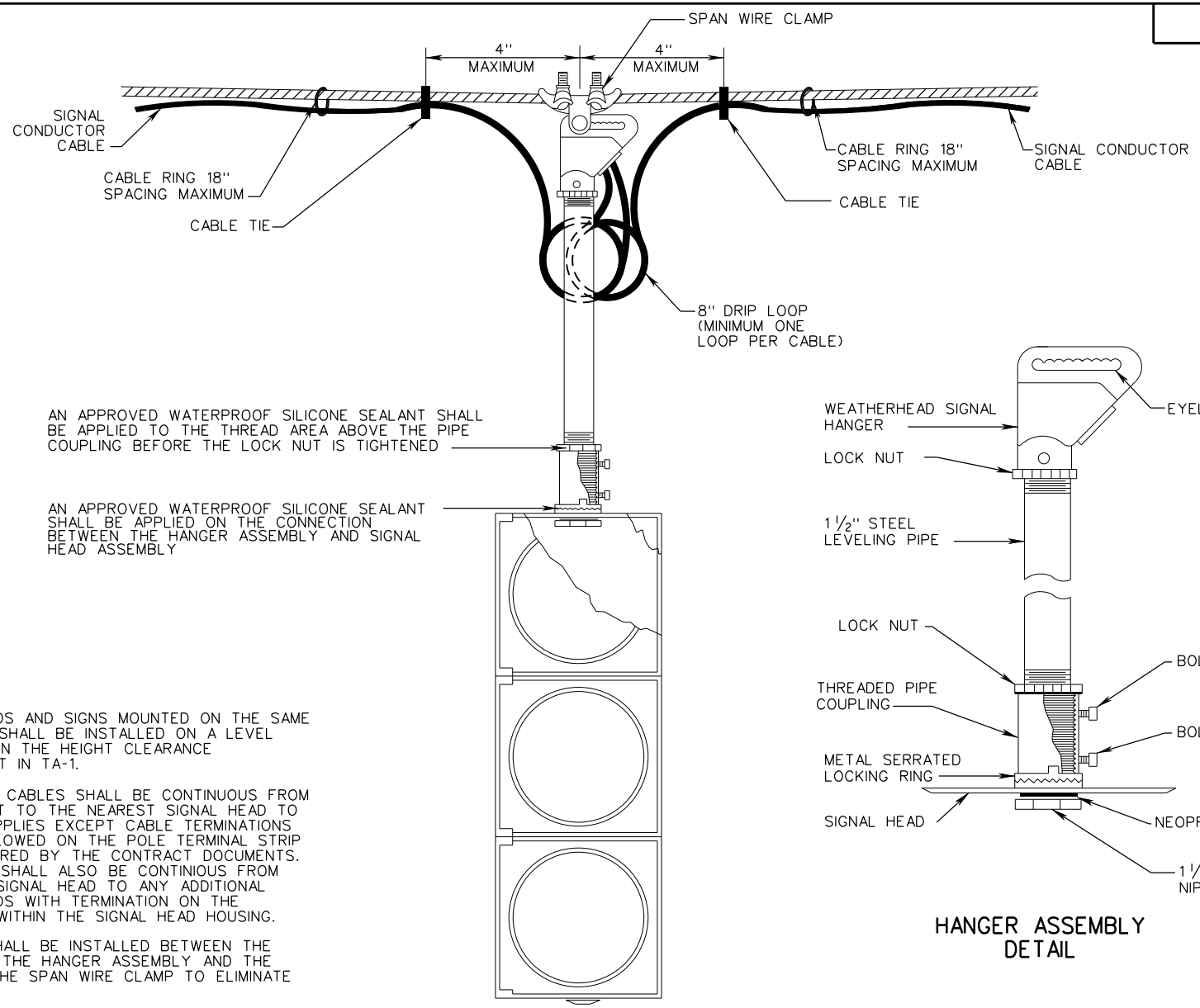

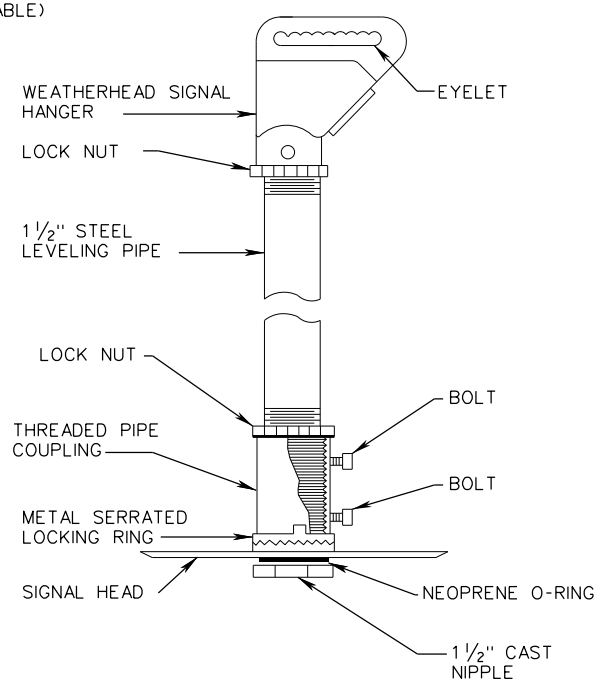

HANGER ASSEMBLY DETAIL

NOTES:

1. SIGNAL HEADS AND SIGNS MOUNTED ON THE SAME SPAN WIRE SHALL BE INSTALLED ON A LEVEL PLANE WITHIN THE HEIGHT CLEARANCE REQUIREMENT IN TA-1.
2. CONDUCTOR CABLES SHALL BE CONTINUOUS FROM THE CABINET TO THE NEAREST SIGNAL HEAD TO WHICH IT APPLIES EXCEPT CABLE TERMINATIONS MAY BE ALLOWED ON THE POLE TERMINAL STRIP WHEN REQUIRED BY THE CONTRACT DOCUMENTS. THE CABLE SHALL ALSO BE CONTINIOUS FROM THE FIRST SIGNAL HEAD TO ANY ADDITIONAL SIGNAL HEADS WITH TERMINATION ON THE TERMINALS WITHIN THE SIGNAL HEAD HOUSING.
3. SPACERS SHALL BE INSTALLED BETWEEN THE EYELET OF THE HANGER ASSEMBLY AND THE INSIDE OF THE SPAN WIRE CLAMP TO ELIMINATE ANY GAP.
4. BACKPLATES INTENTIONALLY NOT SHOWN SO EQUIPMENT DETAIL COULD BE SHOWN MORE CLEARLY.
5. SEE TA-1 FOR TETHER WIRE AND CLAMP DETAILS.

SPECIFICATION REFERENCE	A COPY OF THE ORIGINAL SEALED AND SIGNED DRAWING IS ON FILE IN THE CENTRAL OFFICE.	VDOT ROAD AND BRIDGE STANDARDS	
703	SIGNAL HEAD MOUNTING DETAILS SPAN WIRE VIRGINIA DEPARTMENT OF TRANSPORTATION	REVISION DATE 02/16	SHEET 1 OF 1 1303.10

SW-2

NOTES:

1. SIGNAL HEADS AND SIGNS MOUNTED ON THE SAME SPAN WIRE SHALL BE INSTALLED ON A LEVEL PLANE WITHIN THE HEIGHT CLEARANCE REQUIREMENT IN TA-1.
2. CONDUCTOR CABLES SHALL BE CONTINUOUS FROM THE CABINET TO THE NEAREST SIGNAL HEAD TO WHICH IT APPLIES EXCEPT CABLE TERMINATIONS MAY BE ALLOWED ON THE POLE TERMINAL STRIP WHEN REQUIRED BY THE CONTRACT DOCUMENTS. THE CABLE SHALL ALSO BE CONTINUOUS FROM THE FIRST SIGNAL HEAD TO ANY ADDITIONAL SIGNAL HEADS WITH TERMINATION ON THE TERMINALS WITHIN THE SIGNAL HEAD HOUSING.
3. SPACERS SHALL BE INSTALLED BETWEEN THE EYELET OF THE HANGER ASSEMBLY AND THE INSIDE OF THE SPAN WIRE CLAMP TO ELIMINATE ANY GAP.
4. BACKPLATES INTENTIONALLY NOT SHOWN SO EQUIPMENT DETAIL COULD BE SHOWN MORE CLEARLY.
5. SEE TA-1 FOR TETHER WIRE AND CLAMP DETAILS.

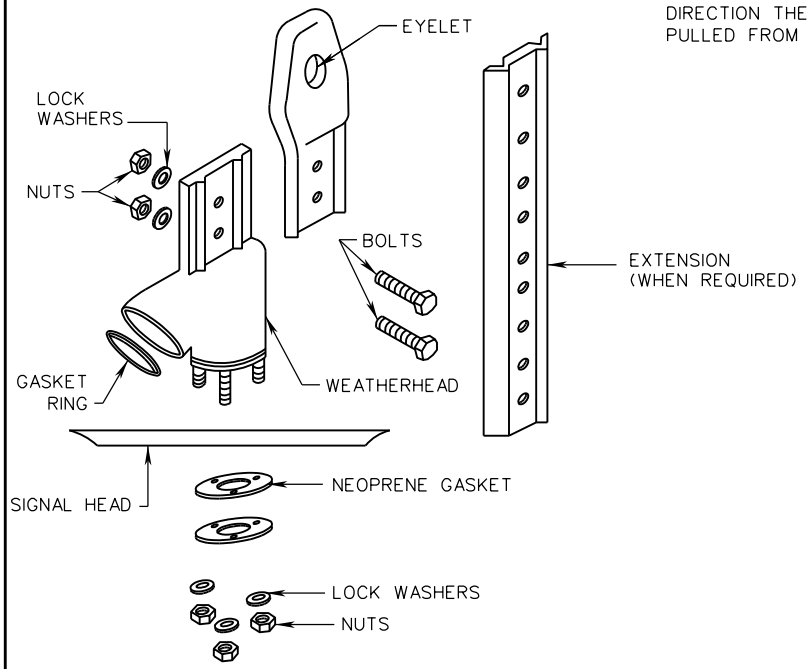

HANGER ASSEMBLY DETAILS

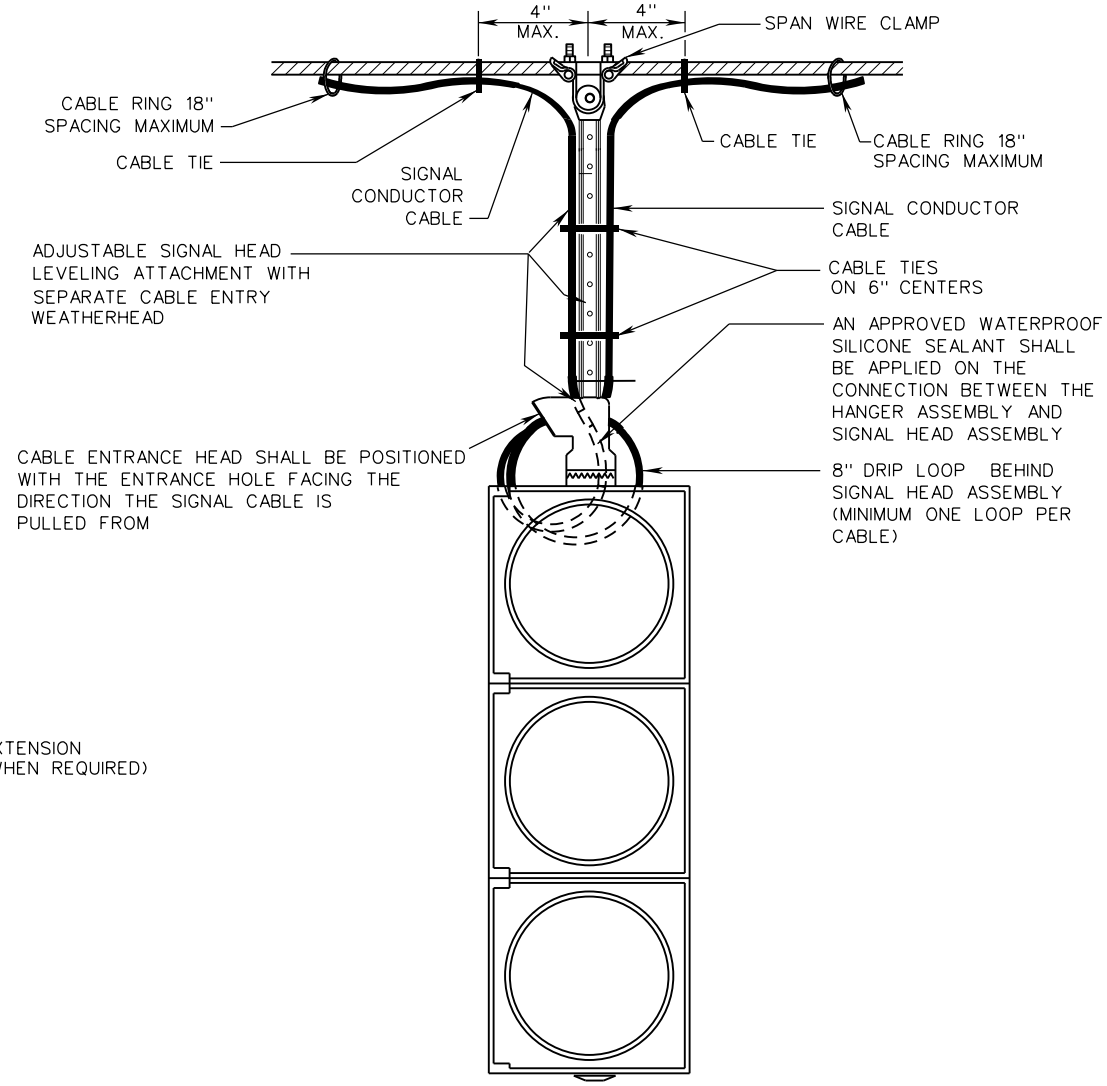

VDOT ROAD AND BRIDGE STANDARDS	A COPY OF THE ORIGINAL SEALED AND SIGNED DRAWING IS ON FILE IN THE CENTRAL OFFICE.	SPECIFICATION REFERENCE
SHEET 1 OF 1	SIGNAL HEAD MOUNTING DETAILS SPAN WIRE	703
1303.20 / REVISION DATE 02/16	VIRGINIA DEPARTMENT OF TRANSPORTATION	

SM-3

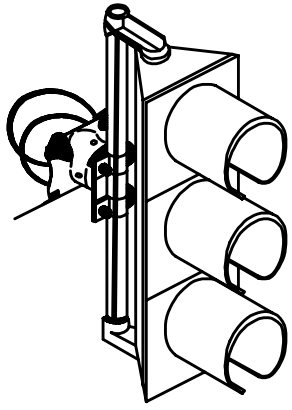

NOTES:

SIGNAL HEAD CABLES SHALL BE CONTINUOUS FROM THE CONTROLLER TO THE NEAREST SIGNAL HEAD TO WHICH IT APPLIES EXCEPT CABLE TERMINATIONS MAY BE ALLOWED ON THE POLE TERMINAL STRIP WHEN REQUIRED BY THE PLANS. THE CABLE SHALL ALSO BE CONTINUOUS FROM THE FIRST SIGNAL HEAD TO ANY ADDITIONAL HEADS WITH TERMINATION ON THE TERMINALS WITHIN THE SIGNAL HEAD HOUSING.

POLE AND HANGER ASSEMBLY HARDWARE REQUIREMENTS

POLE TYPE	HARDWARE TYPE
GALVANIZED STEEL	ALUMINUM OR GALVANIZED IRON
STEEL PAINTED ALUMINUM	ALUMINUM, GALVANIZED IRON OR IRON PAINTED ALUMINUM
STEEL PAINTED OTHER THAN ALUMINUM	ALUMINUM OR IRON PAINTED TO MATCH POLE

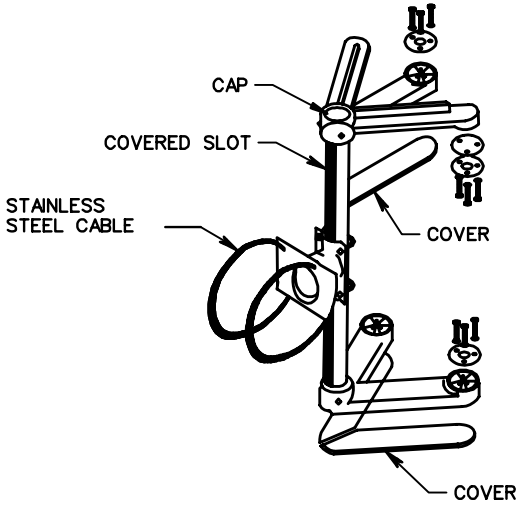

5 SECTION CLUSTER MOUNTING DETAIL

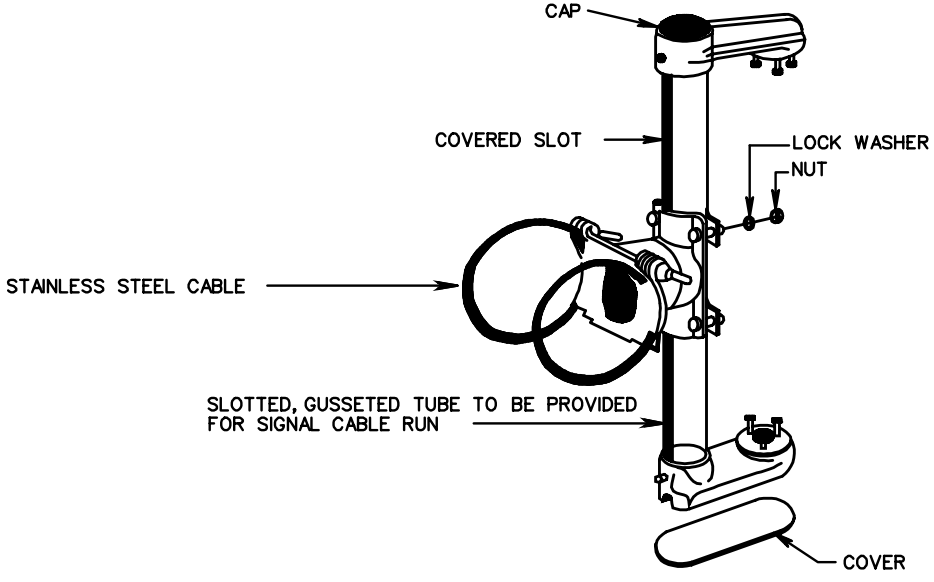

RIGID MAST ARM MOUNTING DETAILS

SPECIFICATION REFERENCE	SIGNAL HEAD MOUNTING DETAILS MAST ARM VIRGINIA DEPARTMENT OF TRANSPORTATION	VDOT ROAD AND BRIDGE STANDARDS
703		REVISION DATE / SHEET 1 OF 1 / 1303.30

SMB-1

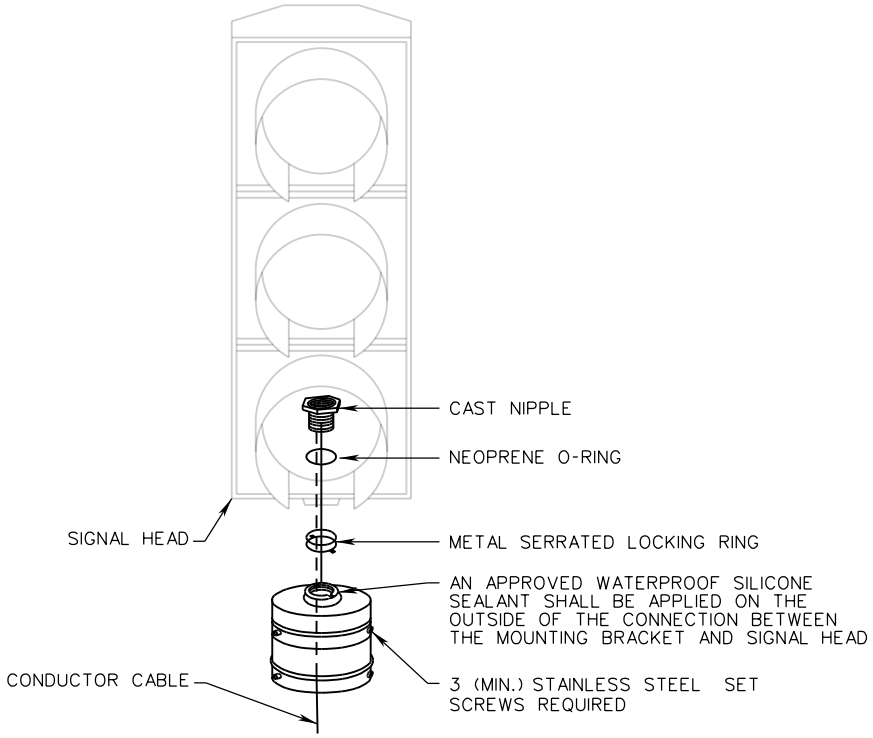

4 1/2" POLE ADAPTOR FOR PF-2 PEDESTAL

POLE TOP MOUNTING CAST ALUMINUM SIGNAL HEADS ONLY

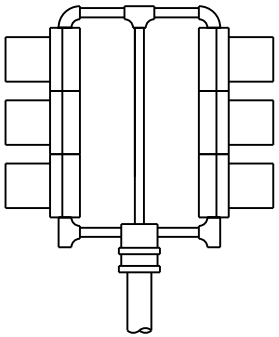

MULTI-WAY MOUNTING DETAIL

NOTES:

1. IF PEDESTRIAN SIGNAL HEADS ARE BEING INSTALLED, THE MOUNTING ATTACHMENTS SHALL BE A TYPE SPECIFICALLY MANUFACTURED FOR THAT PURPOSE.
2. MOUNTING BRACKETS SHOWN ARE TYPICAL AND FOR ONE-WAY AND MULTI-WAY SIGNAL DISPLAYS.
3. BACKPLATES INTENTIONALLY NOT SHOWN SO EQUIPMENT DETAIL COULD BE SHOWN MORE CLEARLY.
4. SIGNAL HEADS MAY BE MOUNTED USING TRI-STUD ASSEMBLIES INSTEAD OF THE CAST NIPPLE ASSEMBLIES.

VDOT ROAD AND BRIDGE STANDARDS	A COPY OF THE ORIGINAL SEALED AND SIGNED DRAWING IS ON FILE IN THE CENTRAL OFFICE.		SPECIFICATION REFERENCE
SHEET 1 OF 1	SIGNAL HEAD MOUNTING DETAILS		703
1303.40	POLE TOP	REVISION DATE 02/16	
	VIRGINIA DEPARTMENT OF TRANSPORTATION		

STANDARD

THIS PAGE INTENTIONALLY LEFT BLANK

SPECIFICATION REFERENCE	TITLE VIRGINIA DEPARTMENT OF TRANSPORTATION	VDOT ROAD AND BRIDGE STANDARDS REVISION DATE	SHEET 1 OF 1 ____._

SMB-2

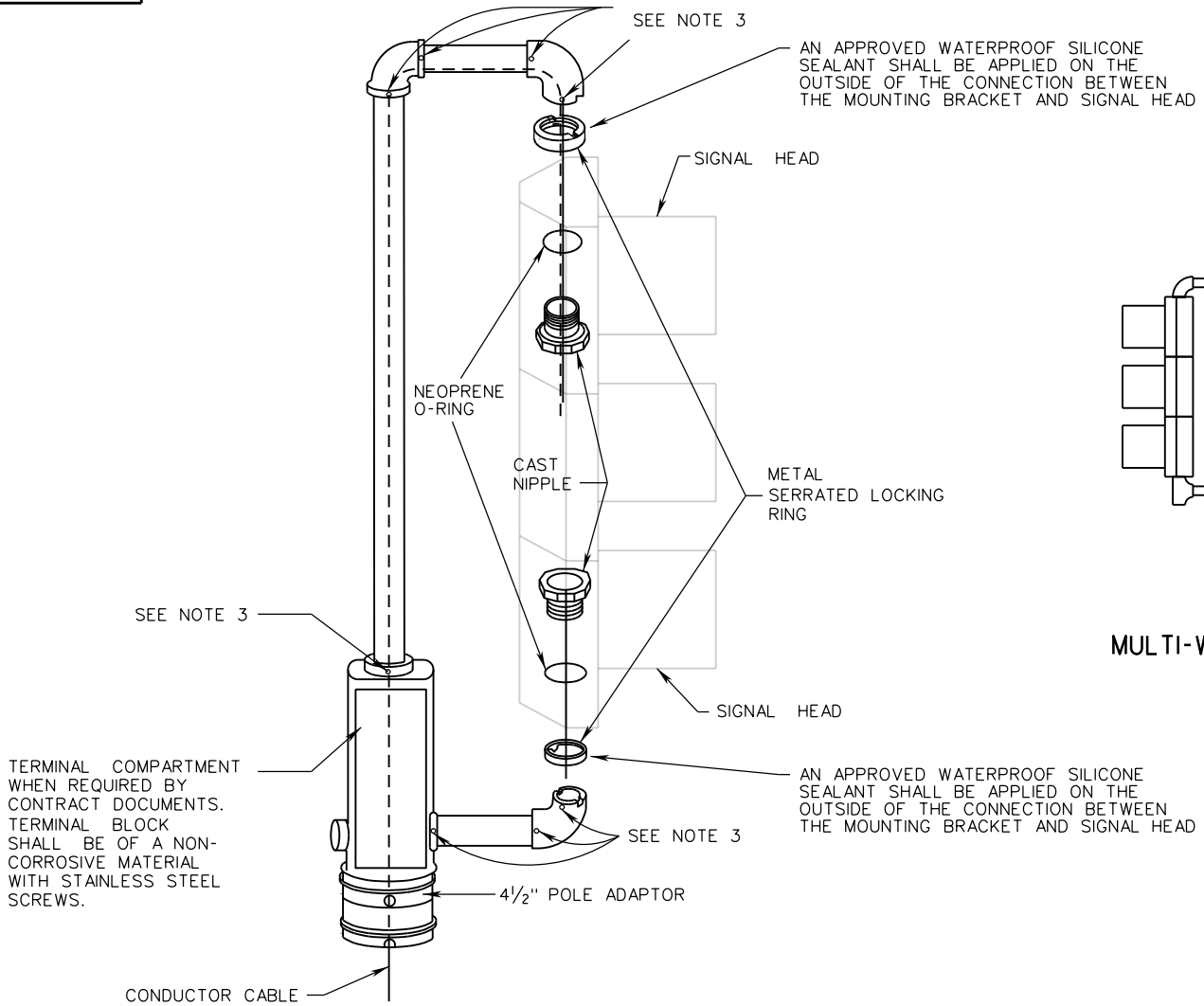

POLE TOP MOUNTING CAST ALUMINUM OR POLYCARBONATE SIGNAL HEADS

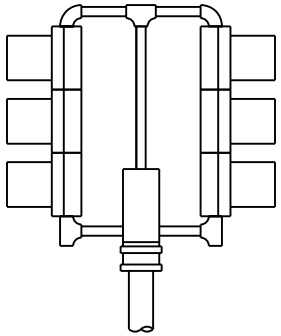

MULTI-WAY MOUNTING DETAIL

NOTES:

1. IF PEDESTRIAN SIGNAL HEADS ARE BEING INSTALLED, THE MOUNTING ATTACHMENTS SHALL BE A TYPE SPECIFICALLY MANUFACTURED FOR THAT PURPOSE.
2. MOUNTING BRACKETS SHOWN ARE TYPICAL AND FOR ONE-WAY AND MULTI-WAY SIGNAL DISPLAYS.
3. SET SCREWS SHALL BE STAINLESS STEEL.
4. SIGNAL HEADS MAY BE MOUNTED USING TRI-STUD ASSEMBLIES INSTEAD OF THE CAST NIPPLE ASSEMBLIES.

VDOT ROAD AND BRIDGE STANDARDS	A COPY OF THE ORIGINAL SEALED AND SIGNED DRAWING IS ON FILE IN THE CENTRAL OFFICE.		SPECIFICATION REFERENCE
SHEET 1 OF 1	SIGNAL HEAD MOUNTING DETAILS		703
1303.41	POLE TOP WITH TERMINAL COMPARTMENT AND BRACKET	REVISION DATE NEW 02/16	
	VIRGINIA DEPARTMENT OF TRANSPORTATION		

STANDARD

THIS PAGE INTENTIONALLY LEFT BLANK

SPECIFICATION REFERENCE	TITLE VIRGINIA DEPARTMENT OF TRANSPORTATION	VDOT ROAD AND BRIDGE STANDARDS REVISION DATE	SHEET 1 OF 1 ____._

SMB-3

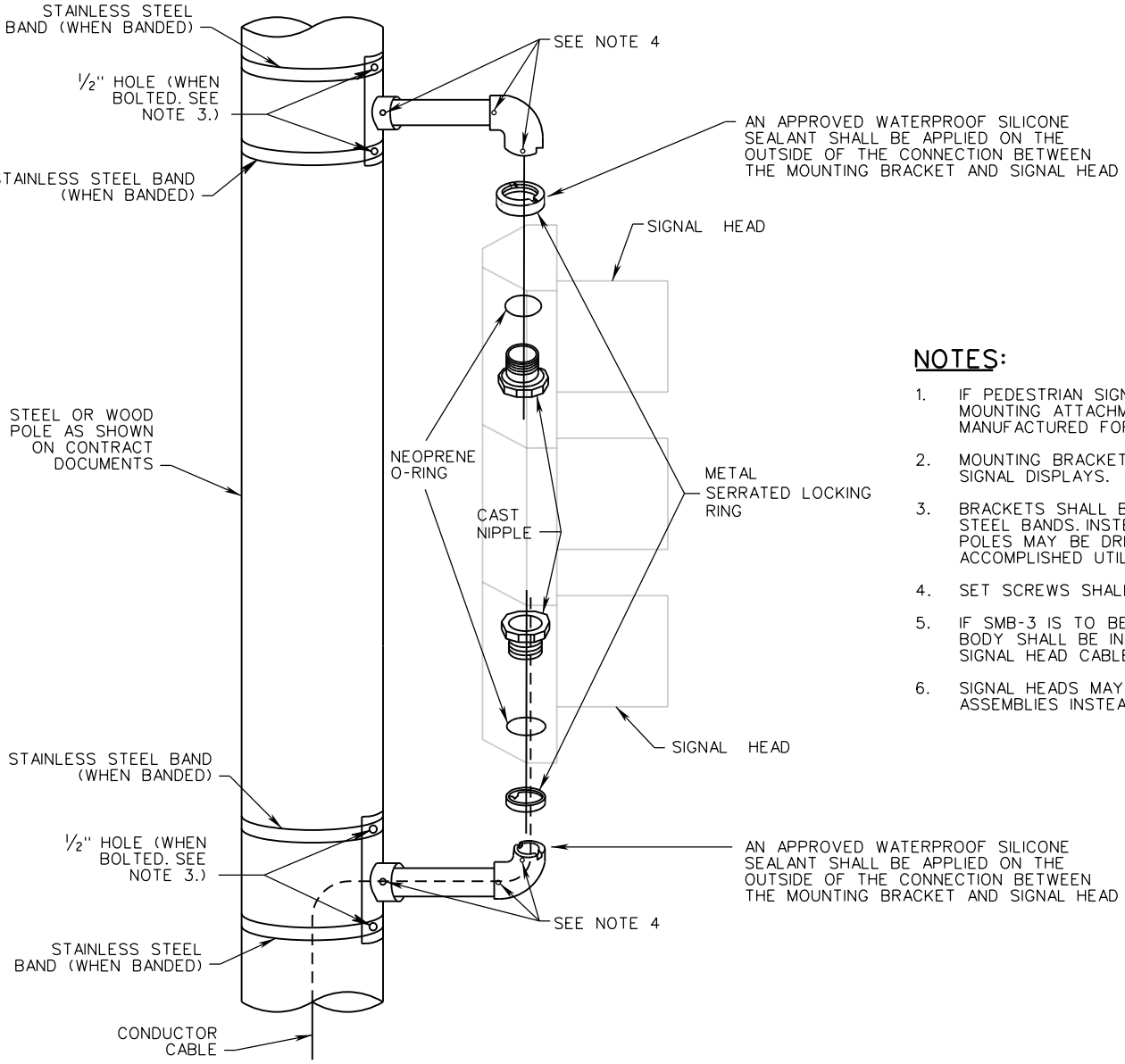

POLE BRACKET MOUNTING CAST ALUMINUM OR POLYCARBONATE SIGNAL HEADS

NOTES:

1. IF PEDESTRIAN SIGNAL HEADS ARE BEING INSTALLED, THE MOUNTING ATTACHMENTS SHALL BE A TYPE SPECIFICALLY MANUFACTURED FOR THAT PURPOSE.
2. MOUNTING BRACKET SHOWN IS TYPICAL AND FOR ONE-WAY SIGNAL DISPLAYS.
3. BRACKETS SHALL BE MOUNTED TO POLE WITH STAINLESS STEEL BANDS. INSTEAD OF STAINLESS STEEL BANDS, STEEL POLES MAY BE DRILLED AND TAPPED AND MOUNTING ACCOMPLISHED UTILIZING ½" STAINLESS STEEL BOLTS.
4. SET SCREWS SHALL BE STAINLESS STEEL.
5. IF SMB-3 IS TO BE MOUNTED ON WOOD POLE A CONDUIT BODY SHALL BE INSTALLED IN BRACKET ARM TO CONNECT SIGNAL HEAD CABLE CONDUIT.
6. SIGNAL HEADS MAY BE MOUNTED USING TRI-STUD ASSEMBLIES INSTEAD OF THE CAST NIPPLE ASSEMBLIES.

VDOT ROAD AND BRIDGE STANDARDS	A COPY OF THE ORIGINAL SEALED AND SIGNED DRAWING IS ON FILE IN THE CENTRAL OFFICE.		SPECIFICATION REFERENCE
SHEET 1 OF 1	SIGNAL HEAD MOUNTING DETAILS	REVISION DATE	703
1303.42	POLE SIDE MOUNTING BRACKET	NEW 02/16	
	VIRGINIA DEPARTMENT OF TRANSPORTATION		

TA-1

NOTES:

1. WIRING AND RIGGING SHALL BE IN ACCORDANCE WITH STANDARD WD-1 AND WD-2.
2. REFER TO STANDARD SMD-1 FOR SIGN PANEL ATTACHMENT DETAIL.
3. AFTER THE LOADS ARE APPLIED, THE VERTICAL CLEARANCE FROM THE HIGHEST POINT OF THE PAVEMENT SURFACE SHALL BE:
   A. 16' MINIMUM (15' MINIMUM FOR MAINTENANCE ACTIVITIES) TO THE LOWEST POINT OF THE SIGNAL HEAD ASSEMBLY (INCLUDING BACKPLATE) AND SIGNS.
   B. 25' MAXIMUM TO THE TOP OF THE SIGNAL HOUSING.

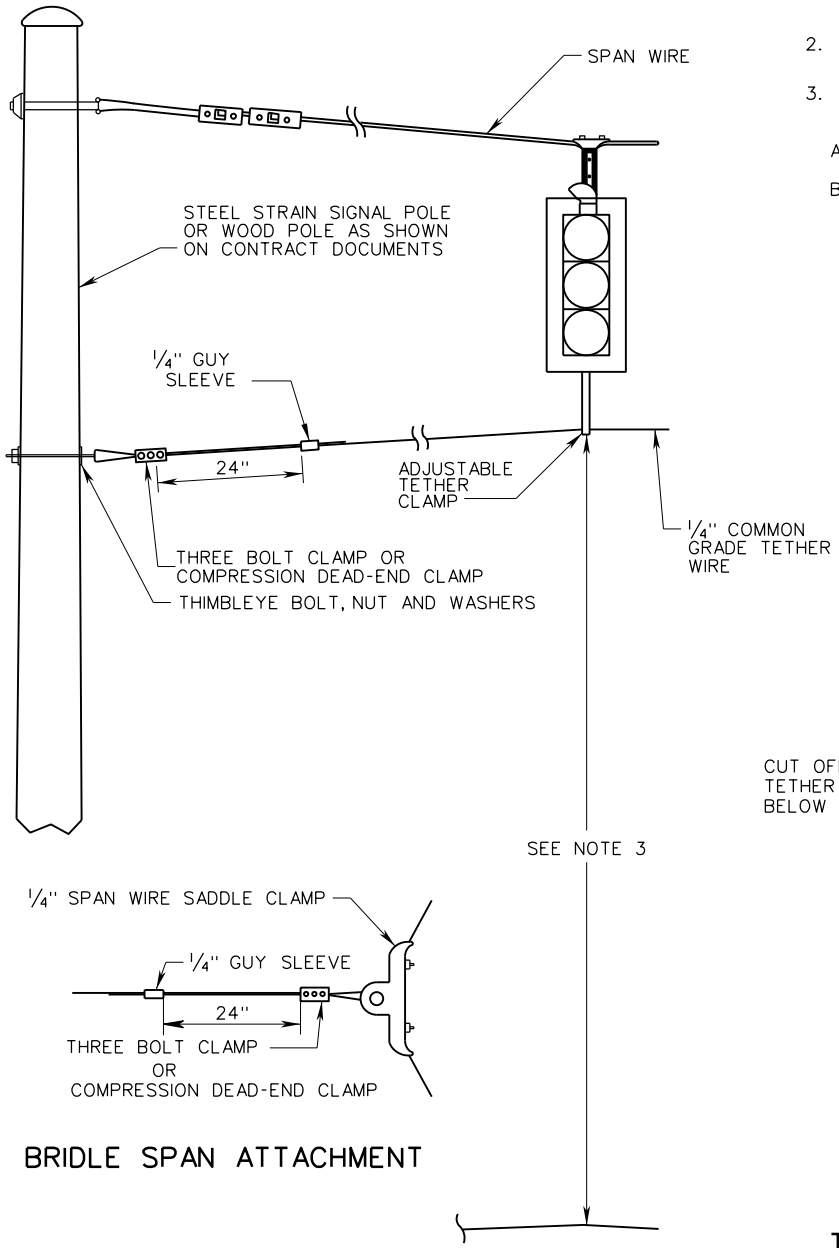

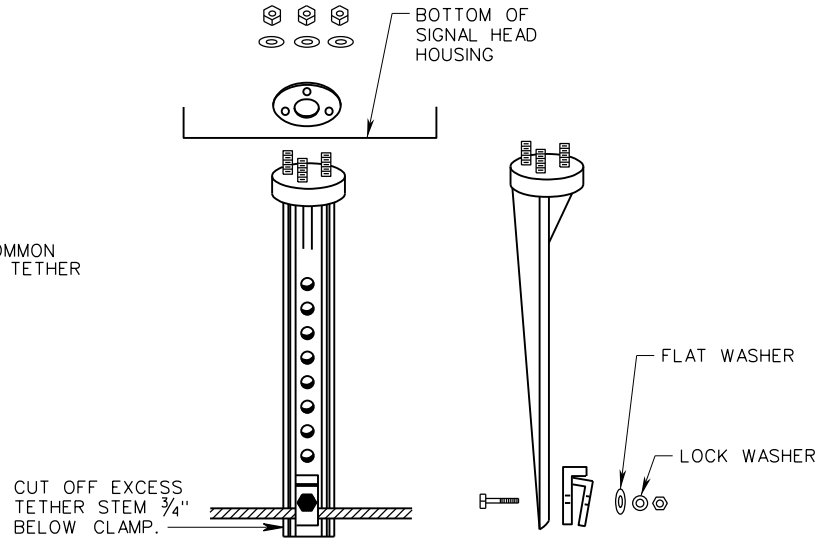

FRONT VIEW SIDE VIEW

ADJUSTABLE TETHER CLAMP

BRIDLE SPAN ATTACHMENT

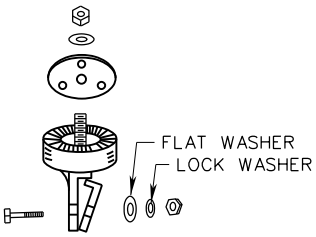

TETHER CLAMP

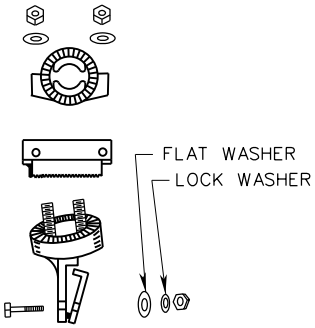

FIVE-SECTION HEAD CLUSTER TETHER CLAMP

SPECIFICATION REFERENCE	A COPY OF THE ORIGINAL SEALED AND SIGNED DRAWING IS ON FILE IN THE CENTRAL OFFICE.	VDOT ROAD AND BRIDGE STANDARDS	
703	TETHER WIRE DETAILS VIRGINIA DEPARTMENT OF TRANSPORTATION	REVISION DATE 02/16	SHEET 1 OF 1 1304.10

SMD-1,2

SPAN WIRE INSTALLATION

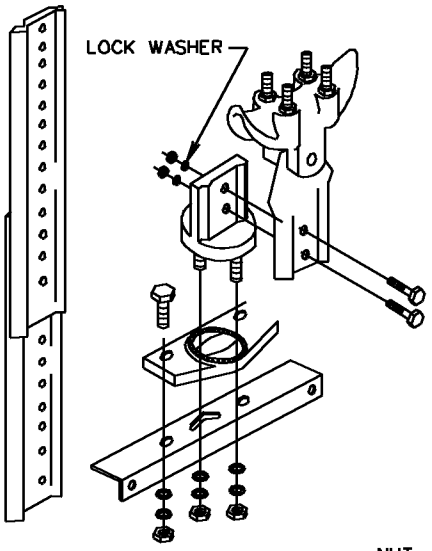

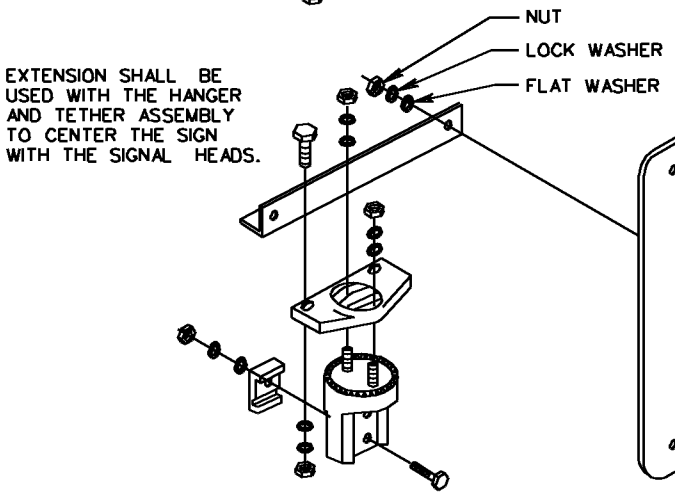

SMD-1

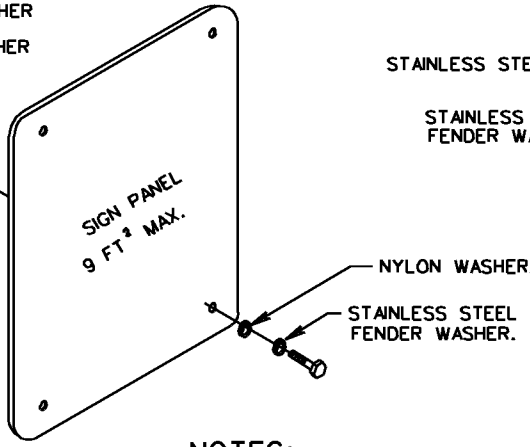

MAST ARM INSTALLATION

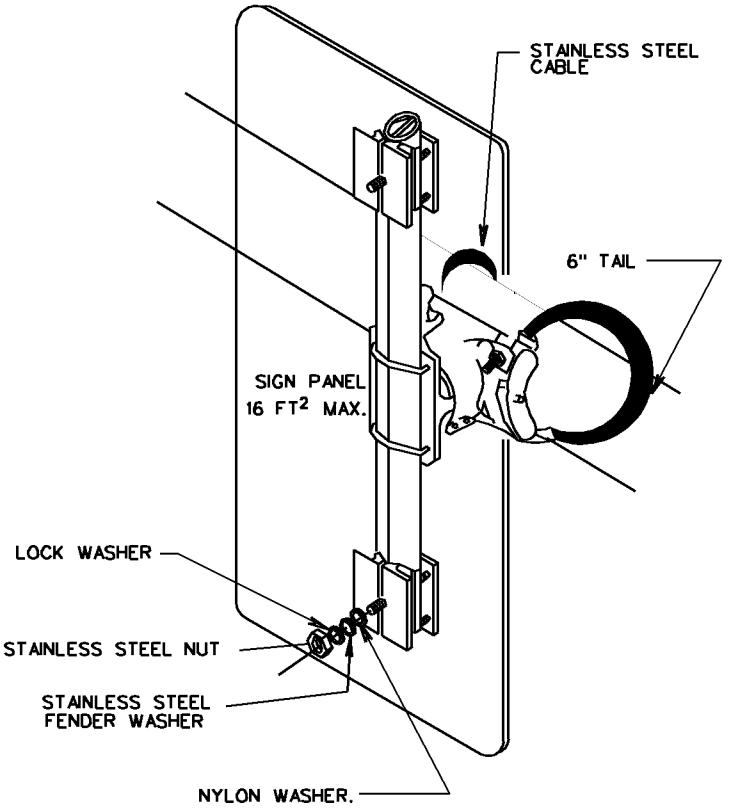

SMD-2

NOTES:

NUTS AND BOLTS USED FOR ATTACHMENT OF SIGN PANEL SHALL BE STAINLESS STEEL AND ¾" IN DIAMETER.

A 1¼" NYLON AND STAINLESS STEEL FENDER WASHER SHALL BE USED ON THE FRONT OF SIGN PANEL WHERE BOLT PASSES THROUGH SIGN PANEL.

ALL NUTS, BOLTS AND WASHERS SHALL BE STAINLESS STEEL OR GALVANIZED STEEL UNLESS OTHERWISE INDICATED

SPACERS SHALL BE INSTALLED BETWEEN THE EYELET OF THE SIGN HANGAR AND THE SPAN WIRE CLAMP TO ELIMINATE ANY GAP.

VDOT ROAD AND BRIDGE STANDARDS	SIGN MOUNTING DETAILS	SPECIFICATION REFERENCE
SHEET 1 OF 1	VIRGINIA DEPARTMENT OF TRANSPORTATION	703
1305.10	REVISION DATE 06-15-2009	

WD-1

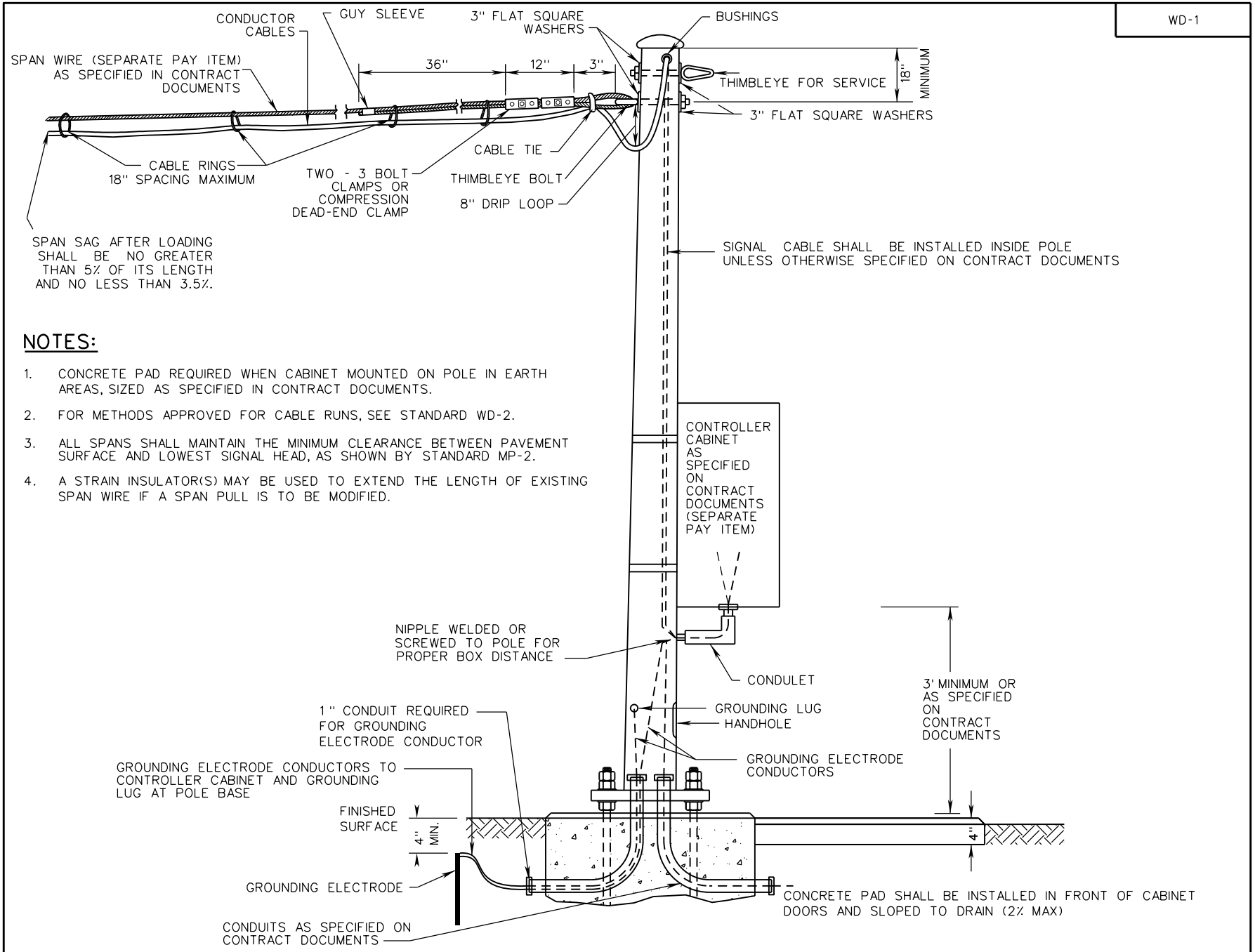

NOTES:

1. CONCRETE PAD REQUIRED WHEN CABINET MOUNTED ON POLE IN EARTH AREAS, SIZED AS SPECIFIED IN CONTRACT DOCUMENTS.
2. FOR METHODS APPROVED FOR CABLE RUNS, SEE STANDARD WD-2.
3. ALL SPANS SHALL MAINTAIN THE MINIMUM CLEARANCE BETWEEN PAVEMENT SURFACE AND LOWEST SIGNAL HEAD, AS SHOWN BY STANDARD MP-2.
4. A STRAIN INSULATOR(S) MAY BE USED TO EXTEND THE LENGTH OF EXISTING SPAN WIRE IF A SPAN PULL IS TO BE MODIFIED.

SPECIFICATION REFERENCE	A COPY OF THE ORIGINAL SEALED AND SIGNED DRAWING IS ON FILE IN THE CENTRAL OFFICE.	VDOT ROAD AND BRIDGE STANDARDS
700	STEEL STRAIN SIGNAL POLE WIRING AND RIGGING DETAILS VIRGINIA DEPARTMENT OF TRANSPORTATION	REVISION DATE 02/16 · SHEET 1 OF 1 · 1306.10

WD-2

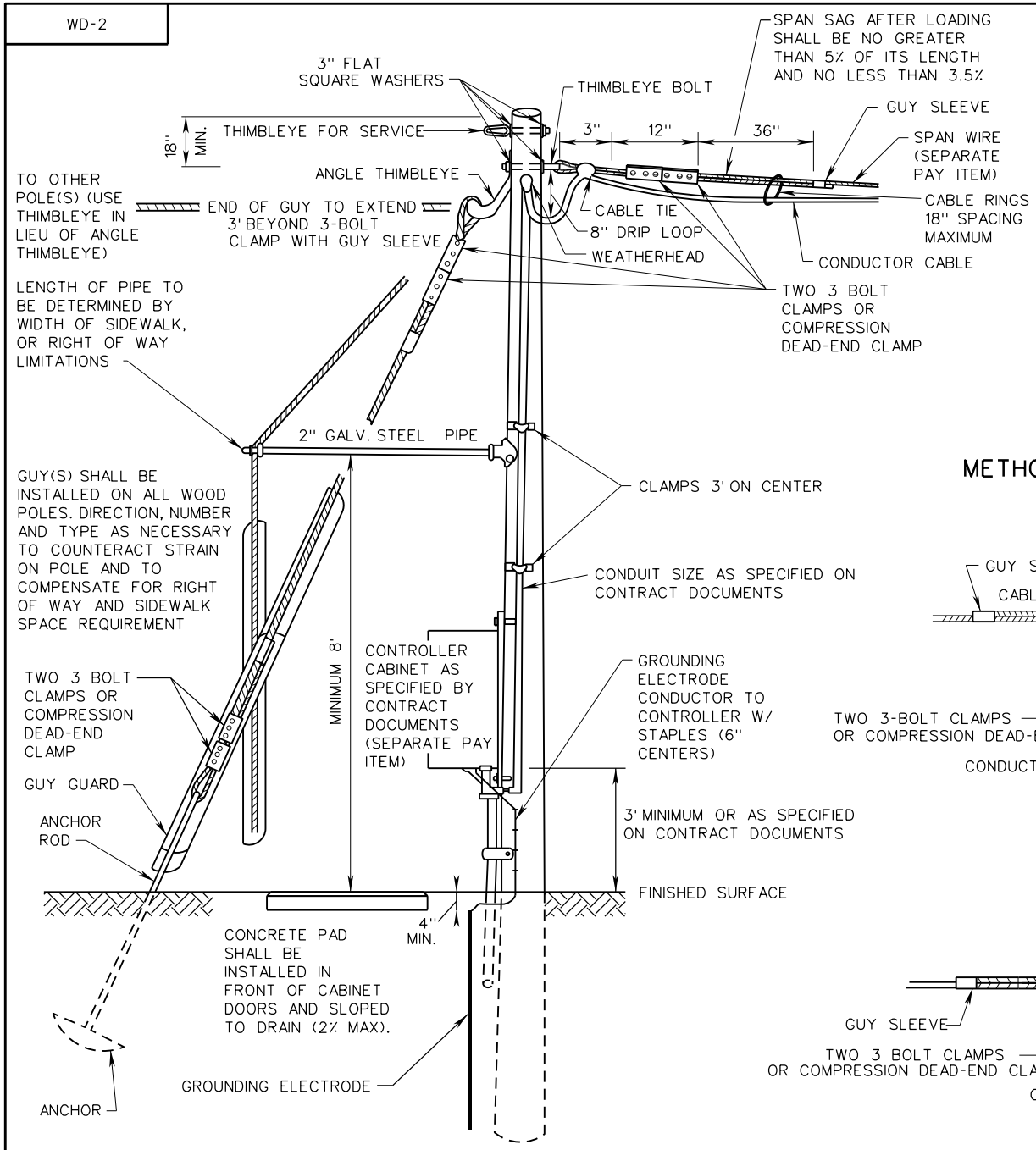

NOTES:

1. CONCRETE PAD REQUIRED WHEN CABINET MOUNTED ON POLE IN EARTH AREAS, SIZED AS SPECIFIED ON CONTRACT DOCUMENTS.
2. ALL SPANS SHALL MAINTAIN THE MINIMUM CLEARANCE BETWEEN PAVEMENT SURFACE AND LOWEST SIGNAL HEAD, AS SHOWN BY STANDARD MP-2.
3. A STRAIN INSULATOR(S) MAY BE USED TO EXTEND THE LENGTH OF EXISTING SPAN WIRE IF A SPAN PULL IS TO BE MODIFIED.
4. CABINET SHALL BE MOUNTED TO ALLOW ADEQUATE CLEARANCE BETWEEN OPEN CABINET DOOR, GUY WIRES, AND ASSOCIATED HARDWARE.
5. CONTRACTOR SHALL FURNISH THE DESIGN OF WOOD POLE TO INCLUDE CLASS, TYPE, DEPTH, AND GUY WIRE SIZE AND PLACEMENT UNLESS OTHERWISE SPECIFIED BY CONTRACT DOCUMENTS.

METHODS APPROVED FOR CABLE RUNS (TOP VIEW)

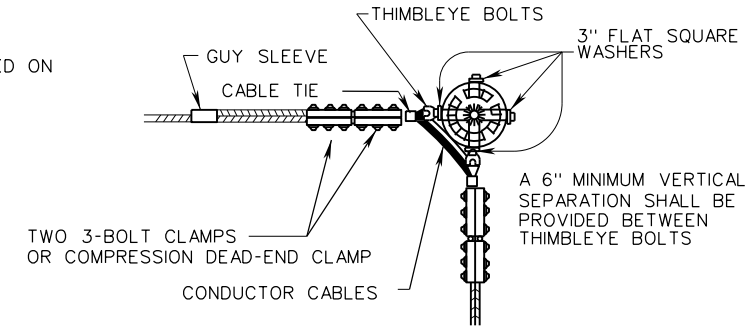

ANGLES LESS THAN 160°

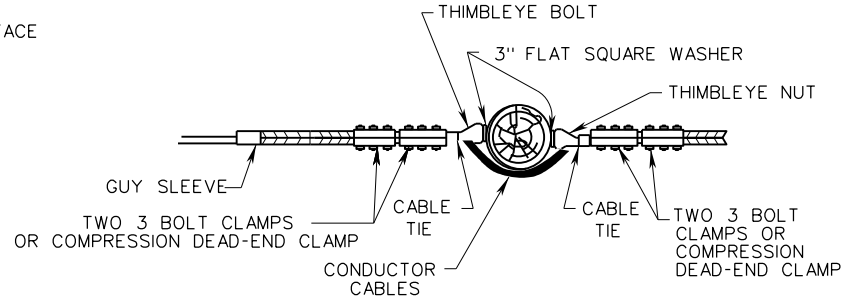

ANGLES GREATER THAN 160°

VDOT ROAD AND BRIDGE STANDARDS	A COPY OF THE ORIGINAL SEALED AND SIGNED DRAWING IS ON FILE IN THE CENTRAL OFFICE.		SPECIFICATION REFERENCE
SHEET 1 OF 1	WOOD POLE WIRING AND RIGGING DETAILS		700 703
1306.20	REVISION DATE 02/16	VIRGINIA DEPARTMENT OF TRANSPORTATION	

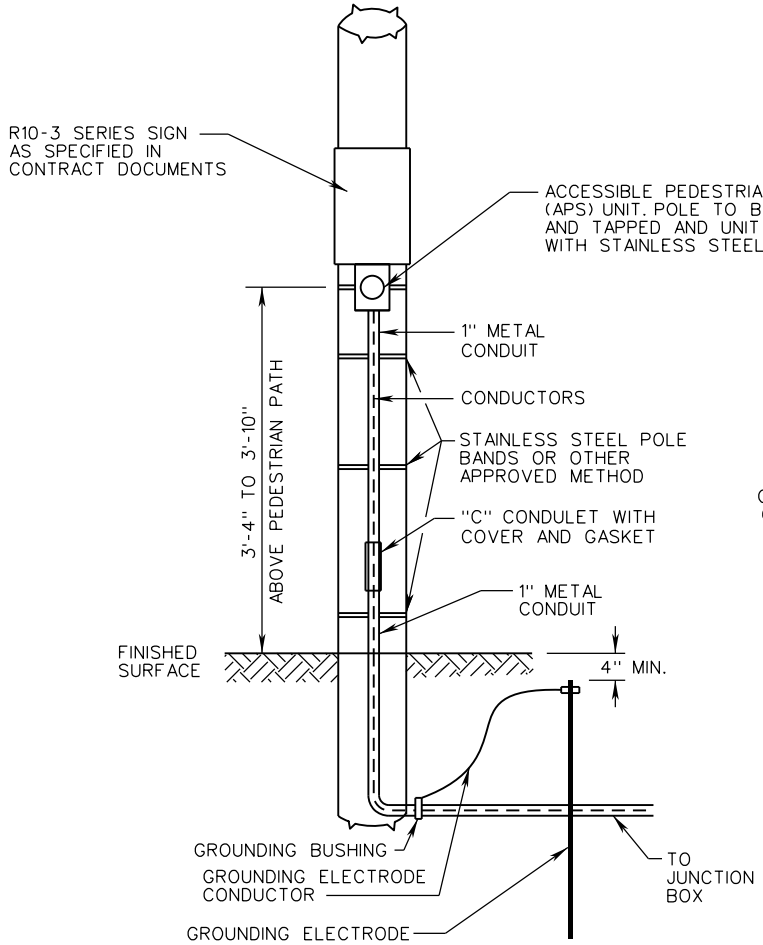

PA-1

WOOD/CONCRETE POLE

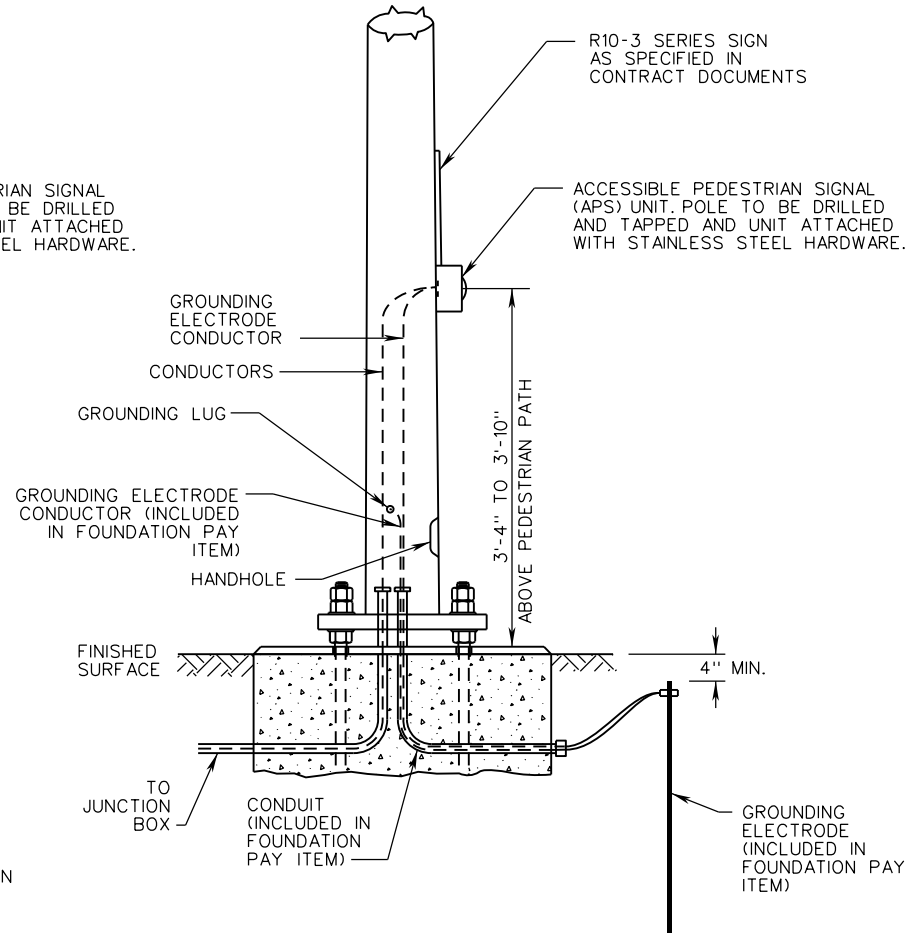

PA-2

SIGNAL/PEDESTAL POLE

SPECIFICATION REFERENCE	A COPY OF THE ORIGINAL SEALED AND SIGNED DRAWING IS ON FILE IN THE CENTRAL OFFICE.	VDOT ROAD AND BRIDGE STANDARDS	
700 703	PEDESTRIAN ACTUATION DETAILS VIRGINIA DEPARTMENT OF TRANSPORTATION	REVISION DATE 09/18	SHEET 1 OF 2 1307.10

PA-3

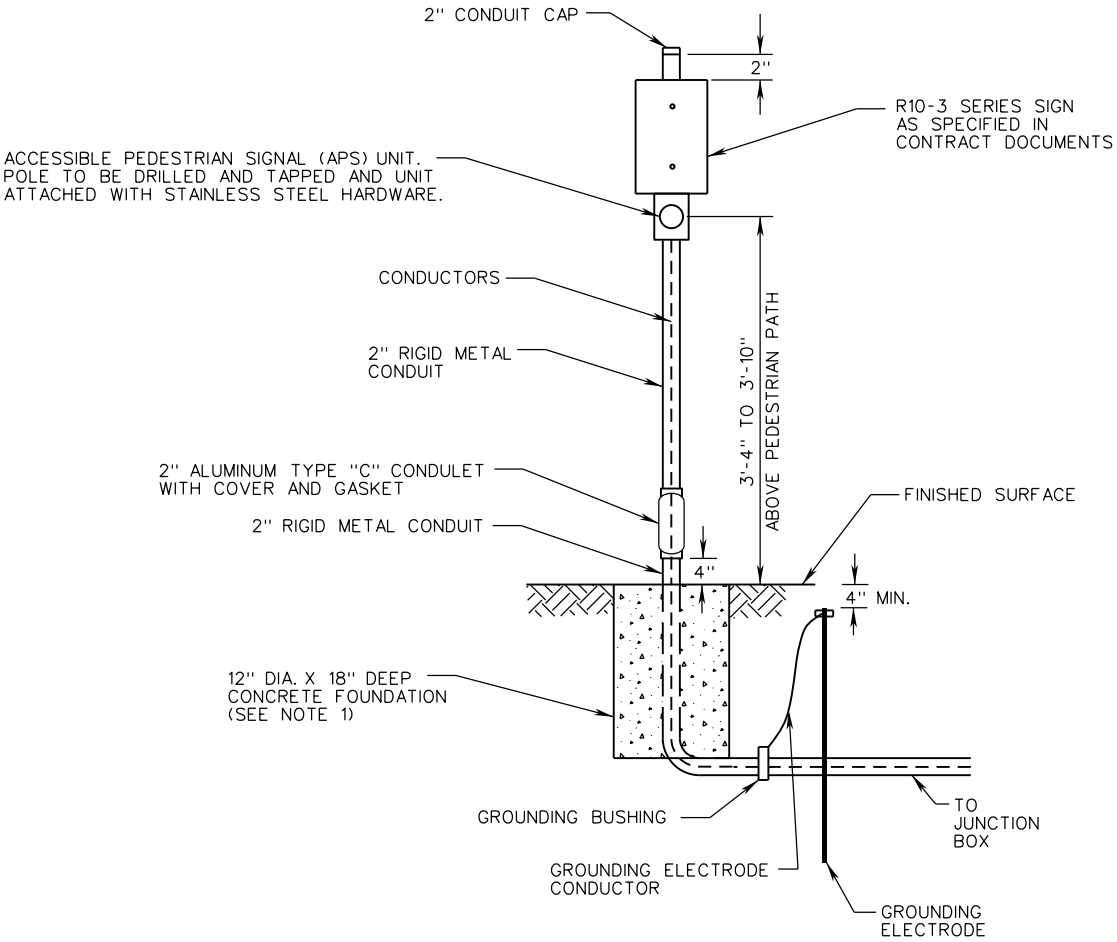

PA-3 METAL

NOTES:

1. CONCRETE SHALL BE CLASS A3 CONCRETE OR A PREAPPROVED BAG MIX FROM THE DEPARTMENT'S PREAPPROVED LIST NO. 31.

VDOT ROAD AND BRIDGE STANDARDS	A COPY OF THE ORIGINAL SEALED AND SIGNED DRAWING IS ON FILE IN THE CENTRAL OFFICE.		SPECIFICATION REFERENCE
SHEET 1 OF 1	PEDESTRIAN ACTUATION DETAILS		700 703
1307.11	REVISION DATE 09/18	VIRGINIA DEPARTMENT OF TRANSPORTATION	

PA-4

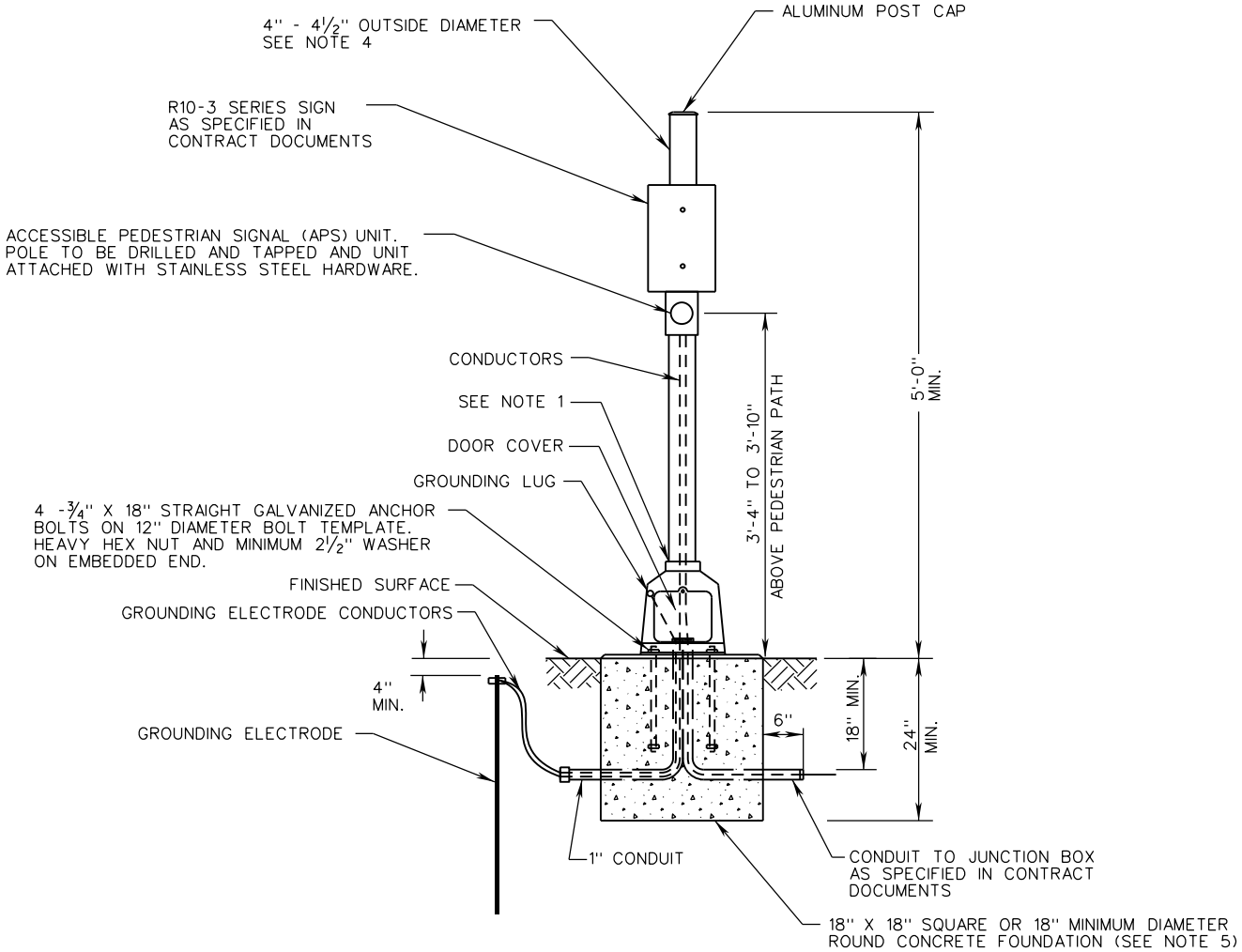

PA-4 PEDESTAL POLE

NOTES:

1. IF POLE SHAFT SCREWS INTO TRANSFORMER BASE INSTEAD OF BEING WELDED, A MINIMUM OF THREE SET SCREWS OR OTHER APPROVED METHOD SHALL BEUSED TO LOCK SHAFT IN POSITION.
2. PEDESTAL POLE SHALL HAVE A BREAKAWAY TRANSFORMER TYPE BASE. THE TRANSFORMER BASE AND NUT TIGHTENING SHALL BE IN ACCORDANCE WITH THE MANUFACTURER'S SPECIFICATIONS.
3. SEE PEDESTAL POLE STANDARDS (PF-2) FOR INSTALLATION DETAILS.
4. STRUCTURAL TUBE MATERIAL SHALL BE MINIMUM SCHEDULE 40 ALUMINUM 6061-T6.
5. CONCRETE SHALL BE CLASS A3 CONCRETE OR A PREAPPROVED BAG MIX FROM THE DEPARTMENT'S PREAPPROVED LIST NO. 31.

SPECIFICATION REFERENCE	A COPY OF THE ORIGINAL SEALED AND SIGNED DRAWING IS ON FILE IN THE CENTRAL OFFICE.	VDOT ROAD AND BRIDGE STANDARDS	
700 703	PEDESTRIAN ACTUATION DETAILS VIRGINIA DEPARTMENT OF TRANSPORTATION	REVISION DATE 09/18	SHEET 1 OF 1 1307.12

SP-5,6,7,8,9

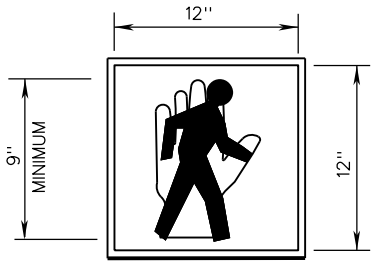

SP-5

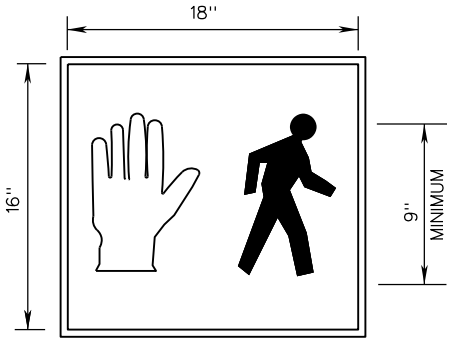

SP-6

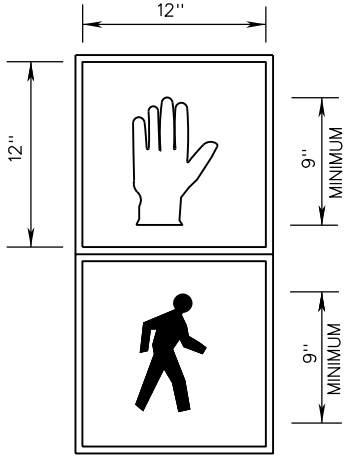

SP-7

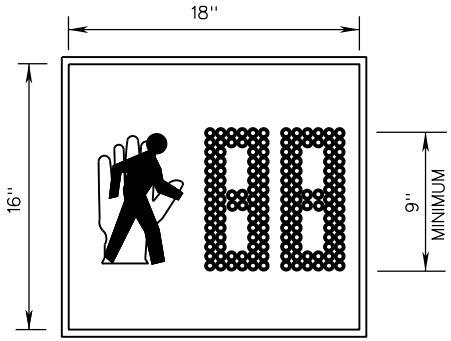

SP-8

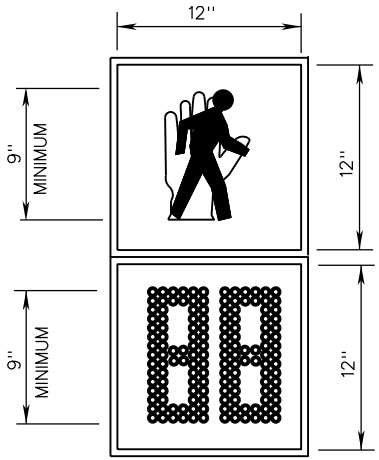

SP-9

NOTES:

1. COUNTDOWN DISPLAYS (SP-8, SP-9) SHALL BE PROVIDED WHERE THE PEDESTRIAN CHANGE INTERVAL IS GREATER THAN 7 SECONDS.

VDOT
ROAD AND BRIDGE STANDARDS

SHEET 1 OF 1
1308.10

REVISION DATE
02/16

A COPY OF THE ORIGINAL SEALED AND SIGNED DRAWING IS ON FILE IN THE CENTRAL OFFICE.

PEDESTRIAN SIGNAL INDICATION

DETAILS

VIRGINIA DEPARTMENT OF TRANSPORTATION

SPECIFICATION REFERENCE

703
238

FB-2

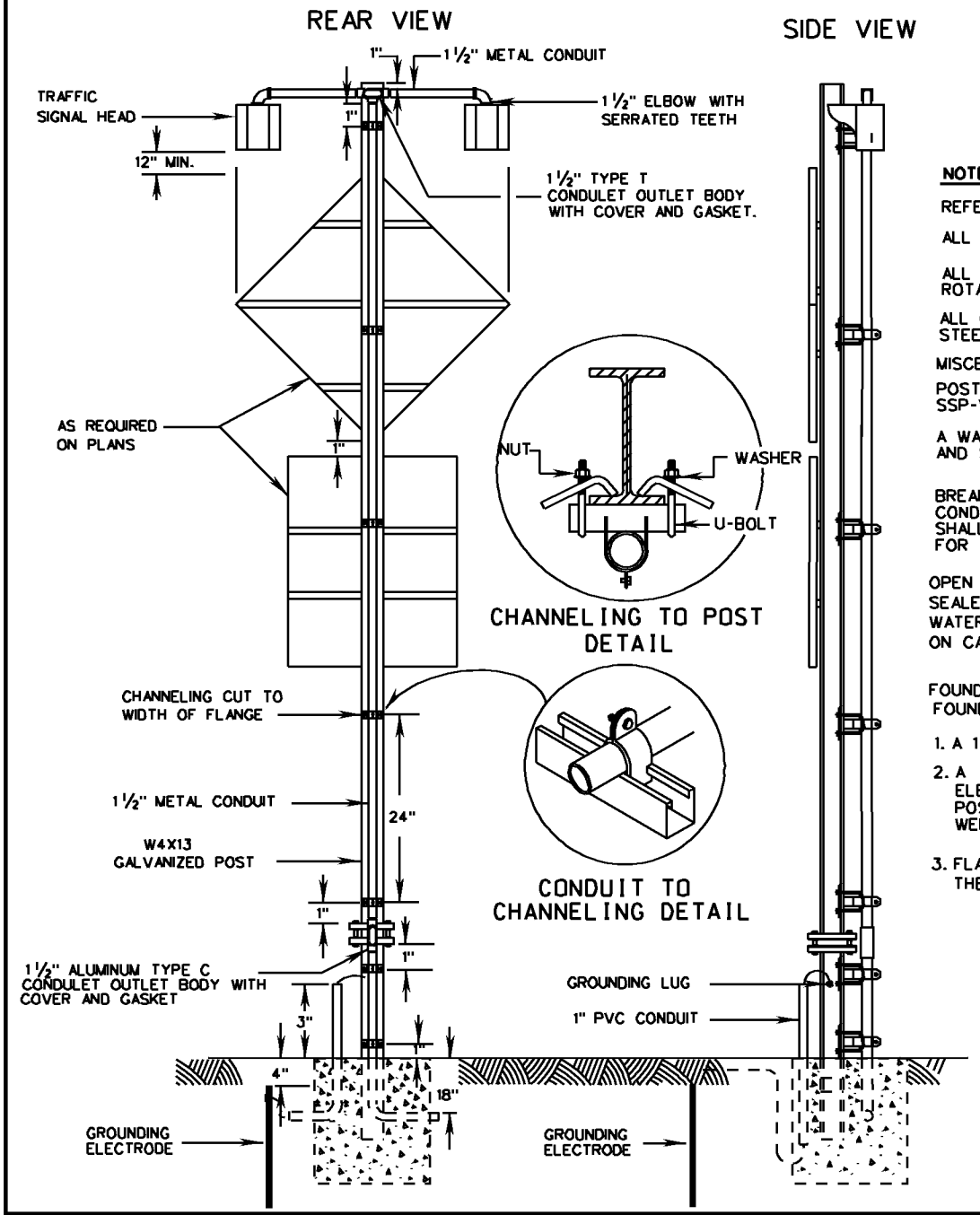

NOTES:

REFER TO STANDARD MP-2 FOR GROUNDING LUG DETAIL.

ALL SIGNAL LENSES SHALL BE YELLOW AND SHALL BE 12" DIAMETER.

ALL ELBOWS AND CONDULETS SHALL HAVE SET SCREWS TO PREVENT ROTATION.

ALL CHANNELING AND CLAMPS SHALL BE GALVANIZED OR STAINLESS STEEL.

MISCELLANEOUS HARDWARE SHALL BE STAINLESS STEEL.

POST AND SIGN PANELS SHALL BE INSTALLED IN ACCORDANCE WITH SSP-VA

A WATERPROOF SEALANT SHALL BE UTILIZED BETWEEN ELBOWS AND SIGNAL HEADS.

BREAKAWAY CONNECTORS SHALL BE INSTALLED ON THE SIGNAL CONDUCTORS WITH THE TYPE C CONDULET. BREAKAWAY CONNECTORS SHALL BE FUSED FOR THE HOT CONDUCTOR AND NONFUSED FOR THE GROUNDED CONDUCTOR.

OPEN ENDS OF CONDUITS WITH CONDUCTORS INSTALLED SHALL BE SEALED WITH AN APPROVED SOFT, PLIABLE, AND EASILY REMOVABLE, WATERPROOF SEALANT. THE SEALANT SHALL NOT HAVE A DELETERIOUS ON CABLE COVERINGS

FOUNDATION SHALL BE IN ACCORDANCE WITH SSP-VA FOR A 4' 6" X 1' 9" FOUNDATION EXCEPT FOR THE FOLLOWING:

1. A 1 1/2" METAL CONDUIT SHALL BE INSTALLED FOR ELECTRICAL POWER.
2. A 1" PVC CONDUIT, NO. 6 GROUNDING CONDUCTOR AND GROUNDING ELECTRODE SHALL BE INSTALLED FOR GROUNDING PURPOSES. STUB POST SHALL BE SUPPLIED WITH A GROUNDING LUG WELDED TO POST WEB.
3. FLASHING BEACON INSTALLED ON UNDIVIDED HIGHWAYS SHALL BE OF THE MEDIAN TYPE INSTALLED IN ACCORDANCE WITH STANDARD SSP-VA.

SPECIFICATION REFERENCE	FLASHING BEACON INSTALLATION DETAILS VIRGINIA DEPARTMENT OF TRANSPORTATION	VDOT ROAD AND BRIDGE STANDARDS	
700 703		REVISION DATE 06-15-2009	SHEET 1 OF 1 1309.10

PF-8

NOTES:

1. ANCHOR BOLTS SHALL BE AS PER STANDARD AB-1.

2. ANCHOR BOLT LAYOUT SHALL BE CHECKED AGAINST LATEST APPROVED STRUCTURE DRAWINGS.
   A. FOR MAST ARM SIGNAL POLE FOUNDATIONS, A MINIMUM OF EIGHT (8) 2-INCH DIAMETER ANCHOR BOLTS ARE REQUIRED. TYPE A AND TYPE D POLES MAY BE INSTALLED WITH SIX (6) 2-INCH DIAMETER ANCHOR BOLTS IN THE EIGHT-BOLT DESIGN CIRCLE IF THE CONTRACTOR'S DESIGN CALCULATIONS DEMONSTRATE THAT SIX BOLTS WILL BE SUFFICIENT FOR THE DESIGN AND LOADING REQUIREMENTS.
   B. FOR HIGH MAST LIGHT POLE FOUNDATIONS, A MINIMUM OF TWELVE (12) TWO-INCH DIAMETER ANCHOR BOLTS ARE REQUIRED.

3. ALL CONDUITS AS SPECIFIED IN THE CONTRACT DOCUMENTS. IN ADDITION 1 - 1" MIN. CONDUIT REQUIRED FOR GROUNDING ELECTRODE CONDUCTOR. 2 - 2" PVC CONDUITS REQUIRED FOR FUTURE USE. NOTE THAT ADDITIONAL SPARE CONDUITS MAY BE REQUIRED BY THE CONTRACT DOCUMENTS.

4. IN STEEP SLOPE CONDITIONS, THE 4'-0" MAXIMUM CLEARANCE ON THE DOWNSLOPE SIDE MAY BE EXCEEDED IF APPROVED BY THE ENGINEER. THE 12" MINIMUM CLEARANCE ON THE UPSLOPE SIDE SHALL NOT BE DECREASED.

5. FOUNDATION SHALL BE DESIGNED FOR TORSION. WINGS MAY BE USED FOR TORSIONAL RESISTANCE IF REQUIRED BY FOUNDATION DESIGNER. IF TORSION WINGS ARE PROVIDED, THE ANGLE BETWEEN THE TWO TORSION WINGS SHALL NORMALLY BE 180°, BUT MAY VARY FROM 90° TO 180° DEPENDING ON SITE CONDITIONS.

6. ANCHOR BOLTS AND BOLT TEMPLATE SHALL BE FURNISHED WITH POLE. POLE SHALL BE CENTERED ON FOUNDATION.

7. EACH FOUNDATION SHALL BE PERMANENTLY MARKED TO INDICATE ALL SIDES FROM WHICH CONDUITS PASS. THIS MARK SHALL BE MADE WITH A TROWEL WHEN FINISHING THE CONCRETE AND SHALL BE 1/4" DEEP AND 4" TO 6" LONG. LOCATIONS OF EMPTY CONDUITS SHALL HAVE AN ADDITIONAL 2" LONG MARK MADE PERPENDICULAR TO AND CENTERED ON THIS MARKING.

8. NO MORTAR, GROUT, OR CONCRETE SHALL BE PLACED BETWEEN BOTTOM OF BASE PLATE AND TOP OF FOUNDATION.

9. HEIGHT, WIDTH, DEPTH, AND REINFORCEMENT OF FOUNDATION SHALL BE AS REQUIRED BY FOUNDATION DESIGNER.

10. FOUNDATIONS SHALL NOT BE INSTALLED IN THE CENTER OF A DRAINAGE DITCH. IF APPROVED BY THE ENGINEER, FOUNDATIONS MAY BE INSTALLED IN THE SLOPE OF A DRAINAGE DITCH AT AN APPROVED HEIGHT ABOVE GRADE. THE FOUNDATION SHALL NOT BE PLACED IN THE FRONT SLOPE UNLESS THE ENGINEER DETERMINES THAT BACK SLOPE PLACEMENT IS NOT FEASIBLE.

11. THE EDGE OF THE FOUNDATION SHALL BE 1'-0" MIN. FROM THE EDGE OF A PEDESTRIAN PATH, OR 3'-0" MIN. FROM THE EDGE OF A SHARED USE PATH (SEE DETAIL B). IF APPROVED BY THE ENGINEER, FOUNDATIONS MAY BE PLACED IMMEDIATELY ADJACENT TO PEDESTRIAN PATH OR SHARED USE PATH.

12. SPREAD FOOTING MAY BE USED IF APPROVED BY THE ENGINEER.

13. SEE STANDARD VS-1 FOR VARMINT SCREEN DETAILS.

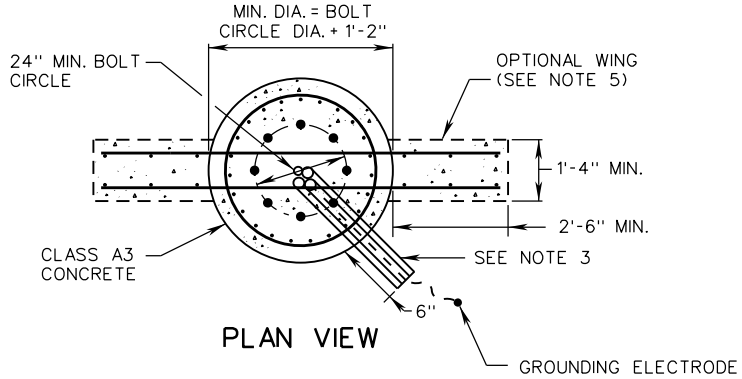

PLAN VIEW

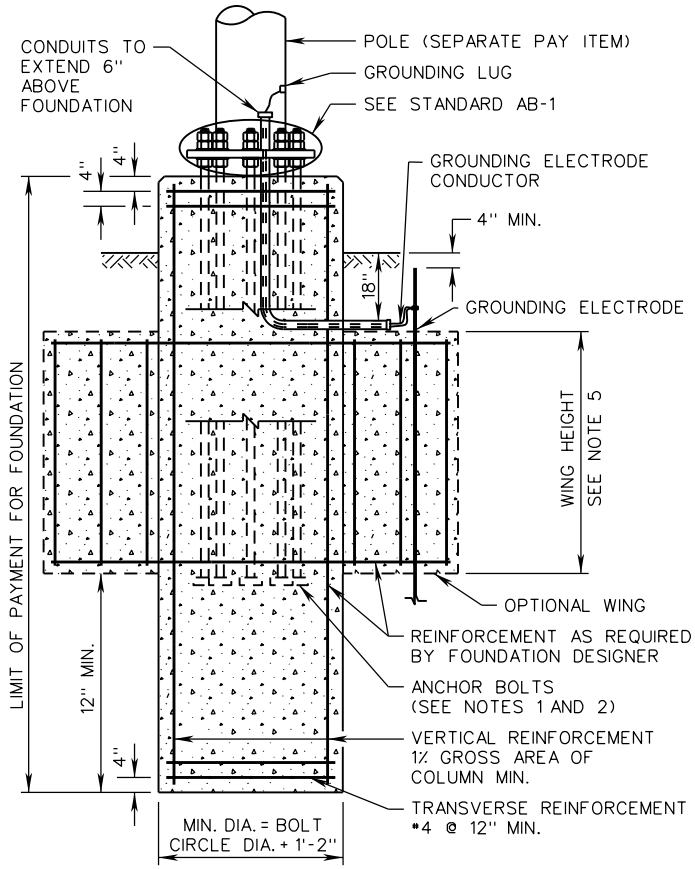

SIDE VIEW

A COPY OF THE ORIGINAL SEALED AND SIGNED DRAWING IS ON FILE IN THE CENTRAL OFFICE.

VDOT ROAD AND BRIDGE STANDARDS	SIGNAL AND HIGH MAST LIGHT POLE FOUNDATION INSTALLATION DETAILS VIRGINIA DEPARTMENT OF TRANSPORTATION	SPECIFICATION REFERENCE
SHEET 1 OF 2 / 1310.12 — REVISION DATE 07/16		700

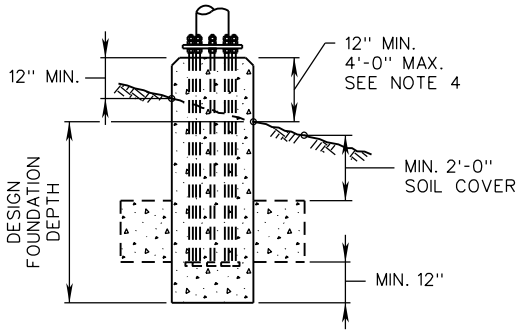

DETAIL A
FOUNDATION NOT ADJACENT TO
PEDESTRIAN PATH DETAIL

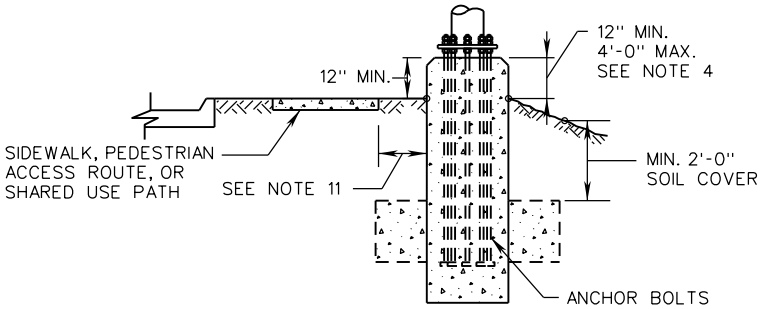

DETAIL B
FOUNDATION ADJACENT TO
PEDESTRIAN PATH DETAIL

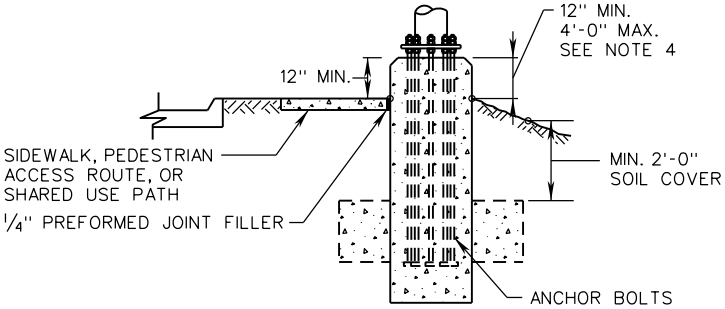

DETAIL C
ALTERNATE FOUNDATION ADJACENT TO
PEDESTRIAN PATH DETAIL
(IF APPROVED BY THE ENGINEER)

A COPY OF THE ORIGINAL SEALED AND SIGNED DRAWING IS ON FILE IN THE CENTRAL OFFICE.

SPECIFICATION REFERENCE	SIGNAL AND HIGH MAST LIGHT POLE FOUNDATION INSTALLATION DETAILS VIRGINIA DEPARTMENT OF TRANSPORTATION	VDOT ROAD AND BRIDGE STANDARDS	
700		REVISION DATE 07/16	SHEET 2 OF 2 1310.13

STANDARD

THIS PAGE INTENTIONALLY LEFT BLANK

VDOT
ROAD AND BRIDGE STANDARDS

SHEET 1 OF 1

REVISION DATE

TITLE

VIRGINIA DEPARTMENT OF TRANSPORTATION

SPECIFICATION REFERENCE

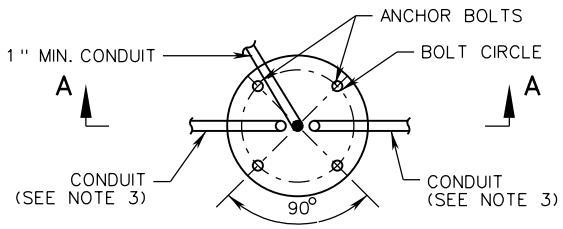

PLAN VIEW

TYPE	W	D	VERTICAL BARS
A	2'-6"	8'	8 -#8

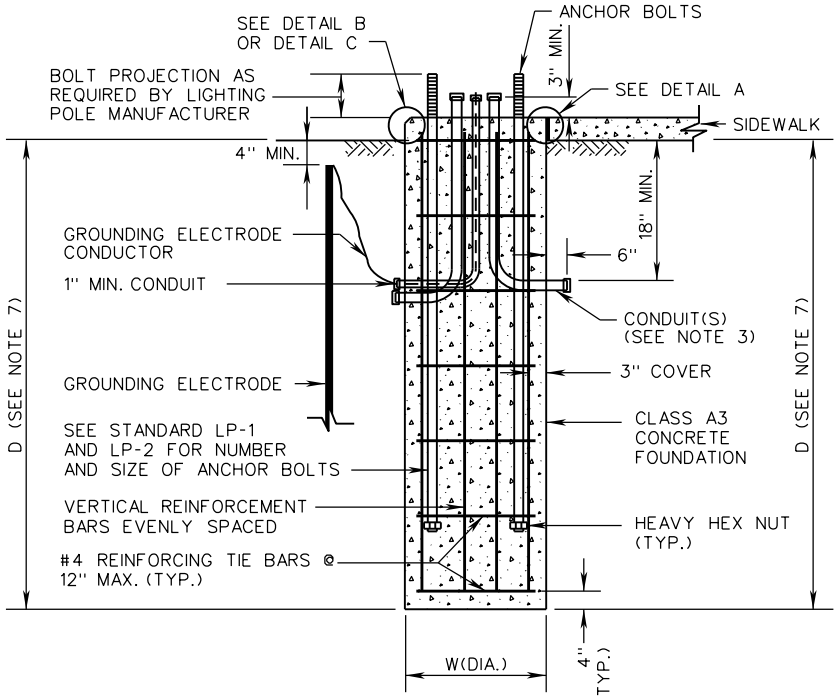

SECTION A-A

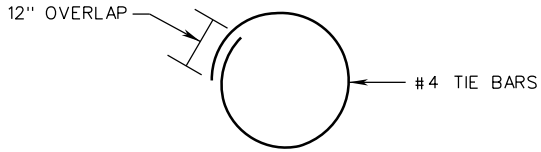

PLAN VIEW
OF TIE BAR

NOTES:

1. CONDUIT ELBOWS SHALL HAVE A 90° BEND. THE BEND RADIUS SHALL BE IN ACCORDANCE WITH THE N.E.C.
2. THE BOLT TEMPLATE SHALL BE FURNISHED BY THE LIGHTING POLE MANUFACTURER. POLE SHALL BE CENTERED ON FOUNDATION.
3. THE NUMBER, ORIENTATION AND SIZE OF CONDUITS ENTERING AND EXITING FOUNDATIONS SHALL BE AS SHOWN IN THE CONTRACT DOCUMENTS. EACH FOUNDATION SHALL BE PERMANENTLY MARKED TO INDICATE ALL SIDES FROM WHICH CONDUITS PASS. THIS MARK SHALL BE MADE WITH A TROWEL WHEN FINISHING THE CONCRETE AND SHALL BE ¼" DEEP AND 4" TO 6" LONG. LOCATIONS OF EMPTY CONDUITS SHALL HAVE AN ADDITIONAL 2" LONG MARK MADE PERPENDICULAR TO AND CENTERED ON THIS MARKING.
4. NO MORTAR, GROUT, OR CONCRETE SHALL BE PLACED BETWEEN BOTTOM OF BASE PLATE AND TOP OF FOUNDATION.
5. ANCHOR BOLTS SHALL BE STRAIGHT. THREADED REINFORCING STEEL IS NOT ALLOWED. ¼" ANCHOR RING PLATE MAY BE USED TO KEEP ANCHOR BOLTS PLUMB DURING INSTALLATION.
6. FOUNDATIONS SHALL NOT BE INSTALLED IN THE CENTER OF A DRAINAGE DITCH. IF APPROVED BY THE ENGINEER, FOUNDATIONS MAY BE INSTALLED IN THE SLOPE OF A DRAINAGE DITCH AT AN APPROVED HEIGHT ABOVE GRADE. THE FOUNDATION SHALL NOT BE PLACED IN THE FRONT SLOPE UNLESS THE ENGINEER DETERMINES THAT BACK SLOPE PLACEMENT IS NOT FEASIBLE.
7. D IS THE MINIMUM DISTANCE FROM THE BOTTOM OF THE POLE FOUNDATION TO THE BOTTOM OF THE SIDEWALK OR THE POINT OF LOWEST GRADED ELEVATION ADJACENT TO THE FOUNDATION.
8. IF POOR SOIL CONDITIONS OR HIGH WATER TABLE IS ENCOUNTERED DURING EXCAVATION, THE CONTRACTOR SHALL NOTIFY THE ENGINEER PRIOR TO PROCEEDING WITH FOUNDATION INSTALLATION.

SPECIFICATION REFERENCE	A COPY OF THE ORIGINAL SEALED AND SIGNED DRAWING IS ON FILE IN THE CENTRAL OFFICE.	VDOT ROAD AND BRIDGE STANDARDS	
700	LIGHTING POLE FOUNDATION INSTALLATION DETAILS VIRGINIA DEPARTMENT OF TRANSPORTATION	REVISION DATE 08/17	SHEET 1 OF 2 1310.20

LF-1

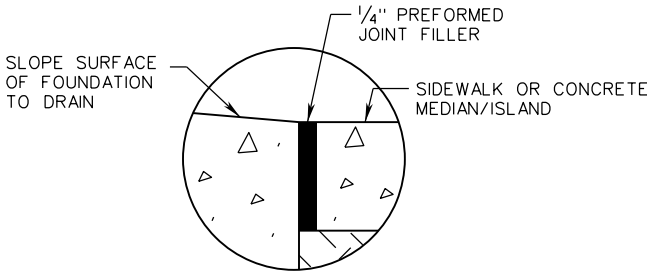

DETAIL A
SIDEWALK OR CONCRETE MEDIAN/ISLAND

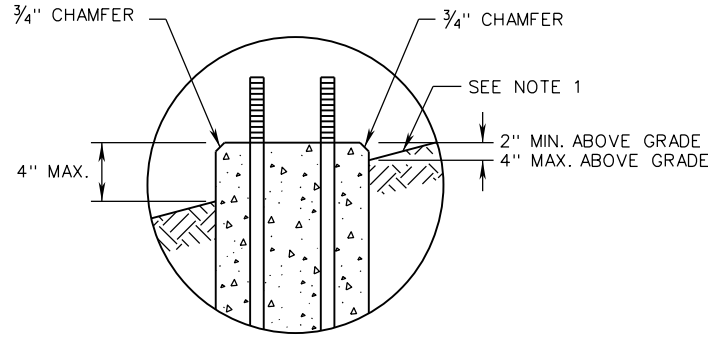

DETAIL B
BREAKAWAY BASE

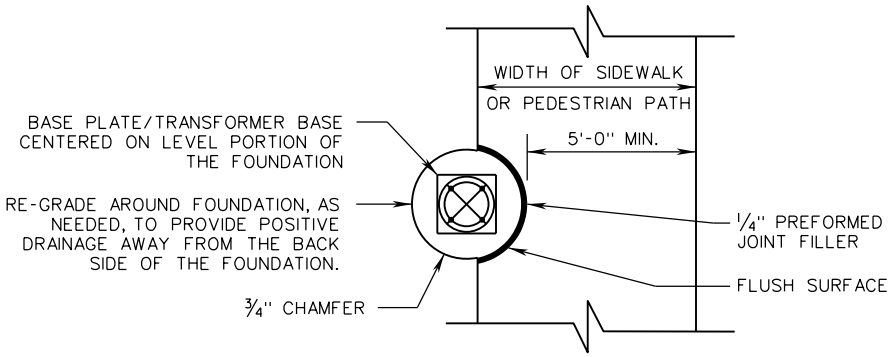

PLAN VIEW OF DETAIL A
AT SIDEWALK

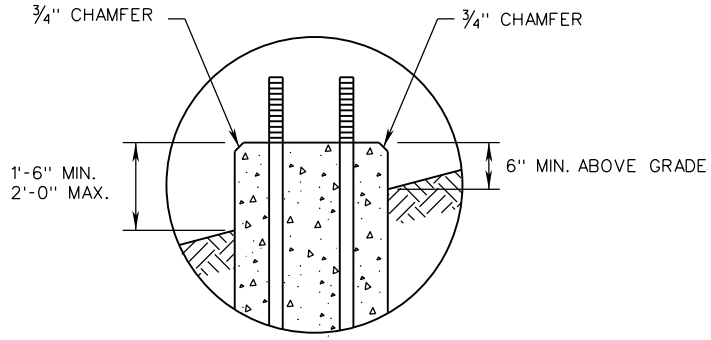

DETAIL C
NON-BREAKAWAY BASE

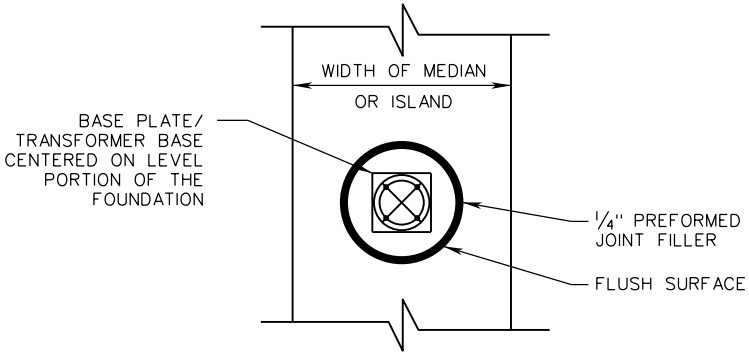

PLAN VIEW OF DETAIL A
AT CONCRETE MEDIAN/ISLAND

NOTES:

1. IF NEEDED IN SLOPED CONDITIONS TO MAINTAIN POSITIVE DRAINAGE AROUND THE FOUNDATION AND TO PROVIDE THE CLEARANCES SHOWN IN DETAIL B, THE CONTRACTOR SHALL RE-GRADE AND ADD RETAINING CURB OR MATERIAL ON THE UP SLOPE WHEN DIRECTED BY THE ENGINEER. RE-GRADING AND RETAINING CURB SHALL BE INCLUDED IN THE PRICE BID FOR FOUNDATION.
2. WHEN FOUNDATION IS ADJACENT TO THE BACK EDGE OF SIDEWALK BUT NOT WITHIN THE SIDEWALK THE TOP OF THE FOUNDATION SHALL BE ELEVATED 2 INCHES MINIMUM ABOVE THE SIDEWALK GRADE.

A COPY OF THE ORIGINAL SEALED AND SIGNED DRAWING IS ON FILE IN THE CENTRAL OFFICE.

VDOT ROAD AND BRIDGE STANDARDS	LIGHTING POLE FOUNDATION INSTALLATION DETAILS VIRGINIA DEPARTMENT OF TRANSPORTATION	SPECIFICATION REFERENCE	
SHEET 2 OF 2	REVISION DATE 07/16	700	
1310.21			

STANDARD

THIS PAGE INTENTIONALLY LEFT BLANK

SPECIFICATION REFERENCE	TITLE VIRGINIA DEPARTMENT OF TRANSPORTATION	VDOT ROAD AND BRIDGE STANDARDS REVISION DATE	SHEET 1 OF 1 ____._

LP-1, 2

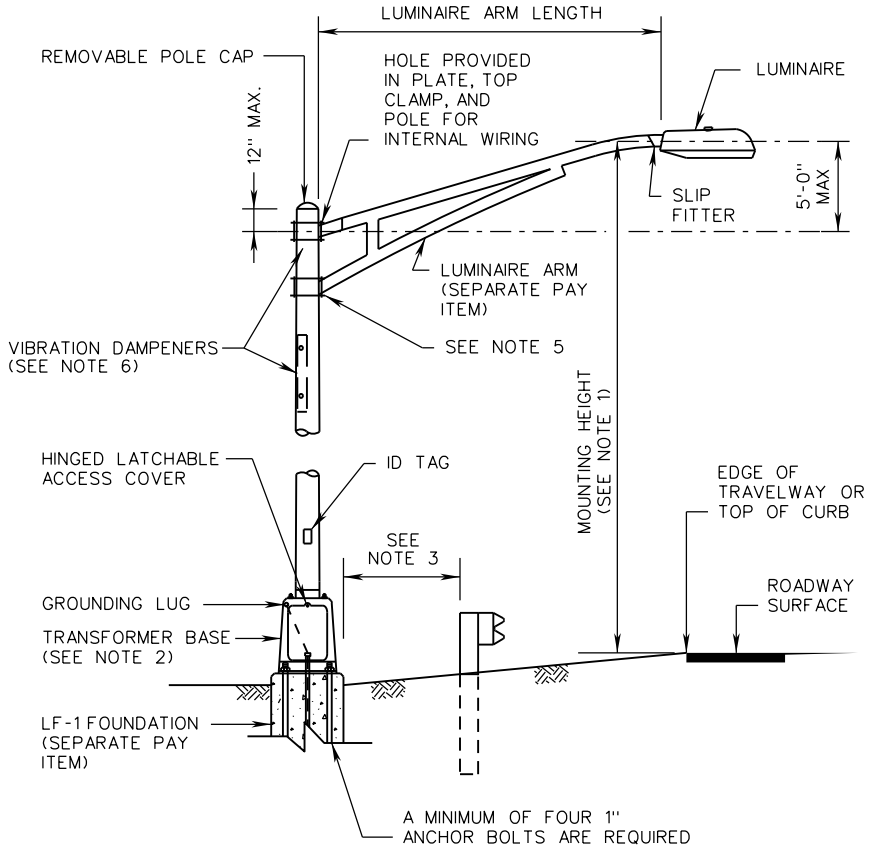

LP-1

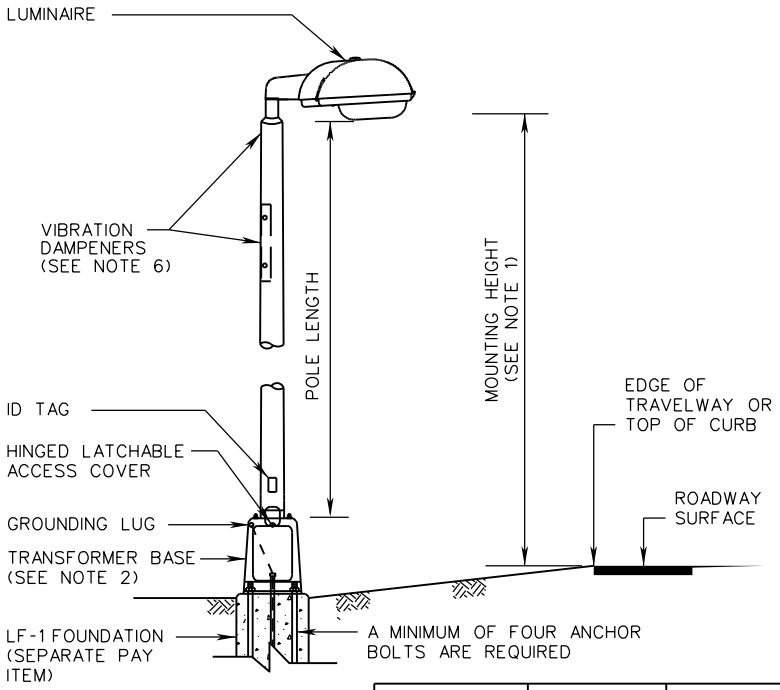

LP-2

LP-2 POLE LENGTH (FEET)	BOLT CIRCLE DIAMETER	ANCHOR BOLT DIAMETER
A (5-17)	12"	1"
B (18-22)	12"	1"
C (23-27)	12"	1"
D (28-32)	12"	1"
E (33-37)	15"	1"
F (38-42)	15"	1"
G (43-47)	15"	1"
H (48-52)	16"	1"
I (53-55)	16"	1 1/4"

NOTES:

1. THE MOUNTING HEIGHT SHOWN IN THE CONTRACT DOCUMENTS SHALL BE ADHERED TO WITHIN A TOLERANCE OF 12" AND IN NO CASE LESS THAN THE MOUNTING HEIGHT SHOWN.
2. TIGHTEN TRANSFORMER BASE NUTS WITH A WRENCH USING TURN-OF-THE-NUT METHOD UNLESS SPECIFIED OTHERWISE IN MANUFACTURER'S INSTALLATION INSTRUCTIONS.
3. LP-1 AND LP-2 LIGHTING POLES SHALL BE LOCATED SUCH THAT THE NEAR SIDE EDGE OF THE FOUNDATION IS OUTSIDE OF THE GUARDRAIL DEFLECTION DISTANCE.
4. ALL LP-1 AND LP-2 POLES SHALL BE INSTALLED ON BREAKAWAY OR NON-BREAKAWAY TRANSFORMER BASES, AS SPECIFIED ON THE PLANS. IF LEVELING NUTS ARE USED FOR INSTALLATION, A VARMIT SCREEN SHALL BE INSTALLED IN ACCORDANCE WITH STANDARD VS-1.
5. POLE CLAMP SHALL BE INSTALLED IN ACCORDANCE WITH MANUFACTURER'S INSTALLATION INSTRUCTIONS WITHOUT THE USE OF SPACERS OR SHIMS.
6. FIRST AND SECOND MODE VIBRATION DAMPENERS SHALL BE DESIGNED AND INSTALLED ON ALL ALUMINUM POLES.

VDOT
ROAD AND BRIDGE STANDARDS

SHEET 1 OF 1
1311.10

REVISION DATE
09/18

A COPY OF THE ORIGINAL SEALED AND SIGNED DRAWING IS ON FILE IN THE CENTRAL OFFICE.

LIGHTING POLE
INSTALLATION DETAILS

VIRGINIA DEPARTMENT OF TRANSPORTATION

SPECIFICATION REFERENCE
700

LP-3

NOTES:

1. WINCH ASSEMBLY AND CIRCUIT BREAKER TO BE ACCESSIBLE FROM HANDHOLE.
2. THE MINIMUM BASE PLATE THICKNESS SHALL BE 2".
3. SEE STANDARD AB-1 FOR ANCHOR BOLT DETAILS.
4. SEE STANDARD VS-1 FOR VARMINT SCREEN DETAILS.
5. SEE STANDARD HH-1 FOR HANDHOLE DETAILS.
6. TYPE 9 IS INTENTIONALLY OMITTED FROM THIS TABLE.

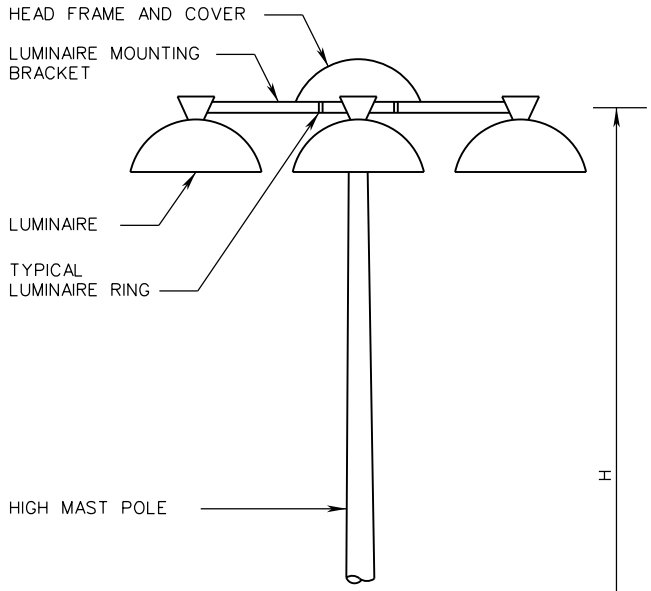

TYPE	H
1	70'
2	80'
3	90'
4	100'
5	110'
6	120'
7	130'
8	140'
9	SEE NOTE 6
10	60'

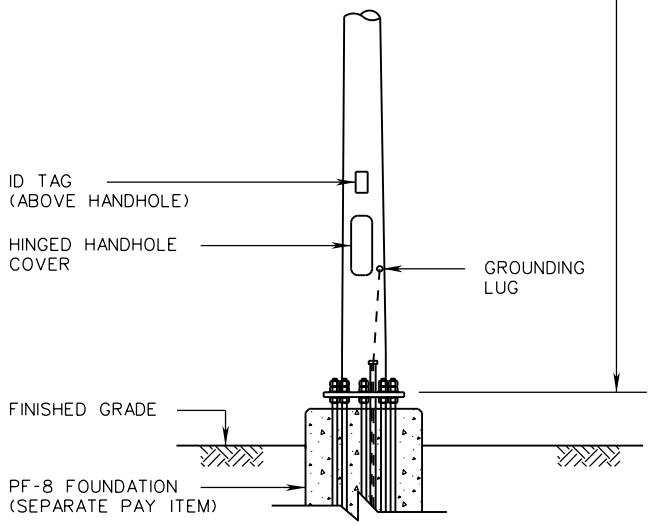

A COPY OF THE ORIGINAL SEALED AND SIGNED DRAWING IS ON FILE IN THE CENTRAL OFFICE.

SPECIFICATION REFERENCE	HIGH MAST LIGHT POLE DETAILS	VDOT ROAD AND BRIDGE STANDARDS
700 705	VIRGINIA DEPARTMENT OF TRANSPORTATION	REVISION DATE 07/16 — SHEET 1 OF 1 — 1311.20

SE-1

NOTES:

1. LOCAL POWER UTILITY COMPANY WILL INSTALL SERVICE CABLE FROM THEIR POWER SOURCE TO THE TOP OF THE OVERHEAD SERVICE POLE AND MAKE REQUIRED SPLICES TO THE CABLES PROVIDED.
2. POLE HEIGHT AND SIZE WILL BE AS SPECIFIED IN THE CONTRACT DOCUMENTS.
3. THIS STANDARD IS APPLICABLE FOR ALL ELECTRICAL SERVICES OTHER THAN 480Y/277.
4. FOR ROADWAY LIGHTING SYSTEMS, ONLY SAFETY SWITCH SHALL BE USED.
5. ALL ELECTRICAL CONNECTIONS AND SPLICES SHALL BE TESTED FOR ELECTRICAL CONTINUITY.
6. CONDUIT AND CONDUCTOR SIZE SHALL BE AS SPECIFIED IN THE CONTRACT DOCUMENTS.
7. RIGID METAL RISER CONDUIT AND SERVICE CABLE SIZE SHALL BE AS SPECIFIED IN THE CONTRACT DOCUMENTS, OR AS SPECIFIED BY THE LOCAL POWER COMPANY.
8. WHEN REQUIRED BY THE CONTRACT DOCUMENTS, AN ELECTRICAL SERVICE WORK PAD SHALL BE PLACED IN FRONT OF THE SAFETY SWITCH/BREAKER BOX. ELECTRICAL SERVICE WORK PAD SHALL BE A SEPARATE PAY ITEM.

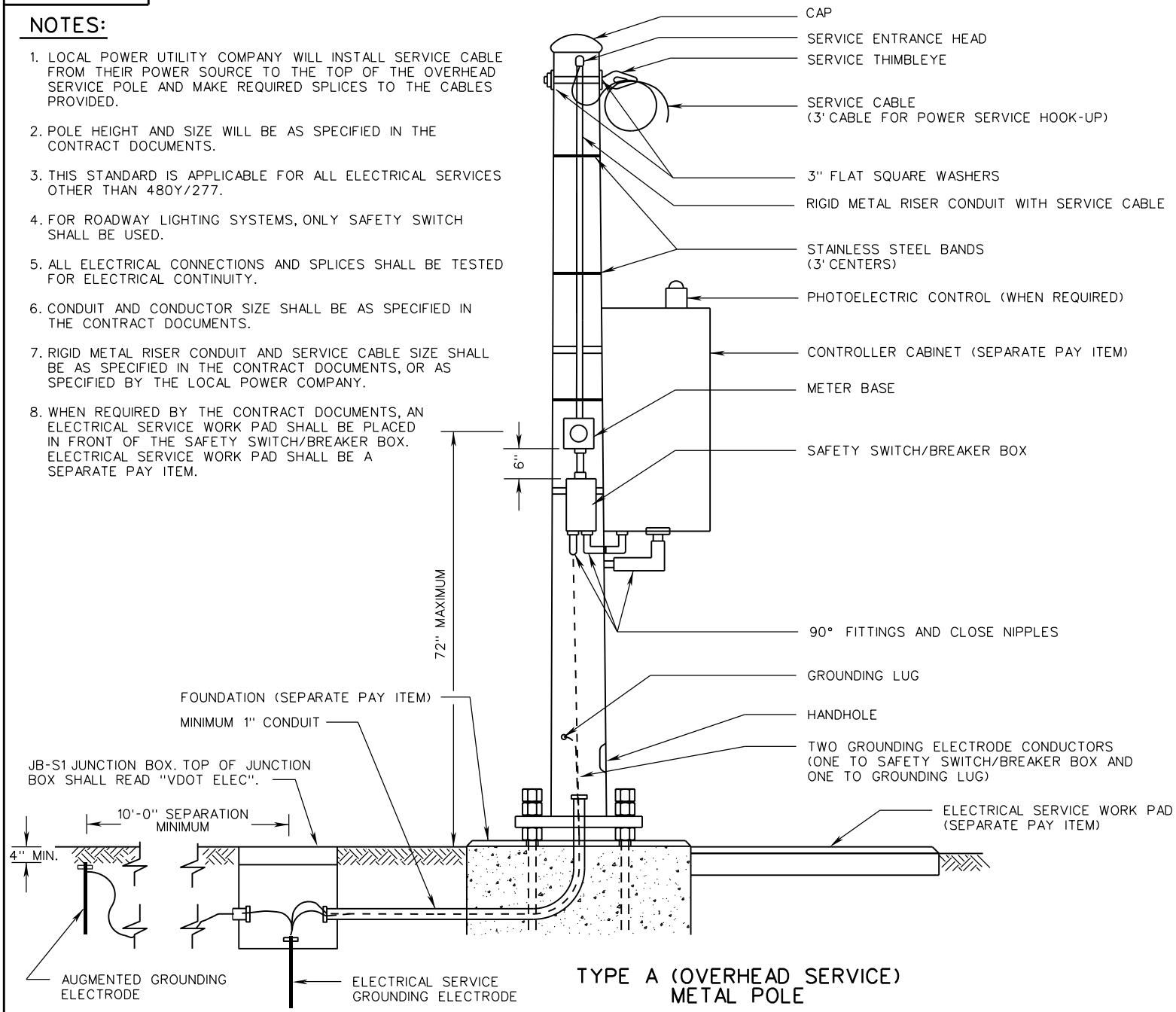

TYPE A (OVERHEAD SERVICE)
METAL POLE

VDOT ROAD AND BRIDGE STANDARDS	A COPY OF THE ORIGINAL SEALED AND SIGNED DRAWING IS ON FILE IN THE CENTRAL OFFICE.	SPECIFICATION REFERENCE
SHEET 1 OF 2	ELECTRICAL SERVICE INSTALLATION DETAILS	700
1312.10	REVISION DATE 02/16	VIRGINIA DEPARTMENT OF TRANSPORTATION

SE-1

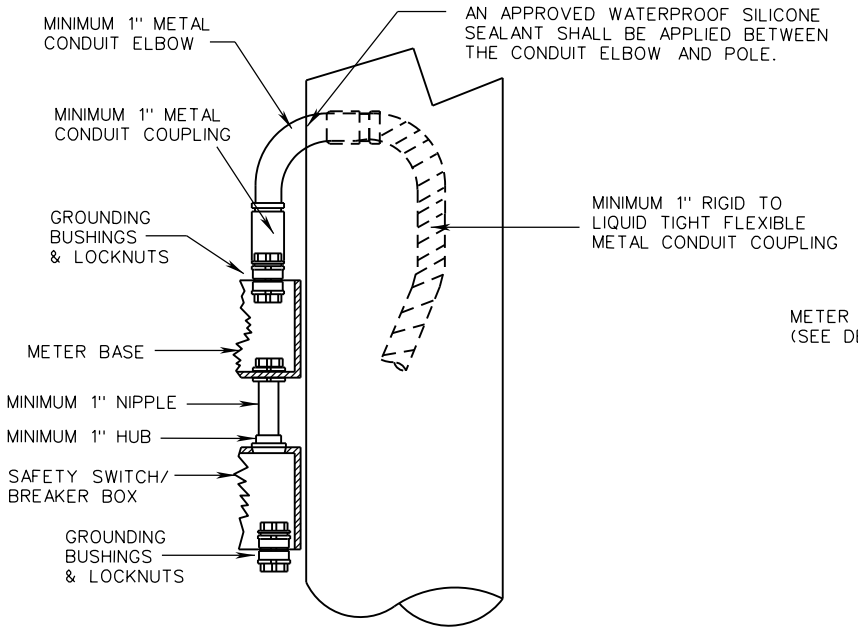

DETAIL FOR CONNECTION OF CONDUIT TO METER BASE

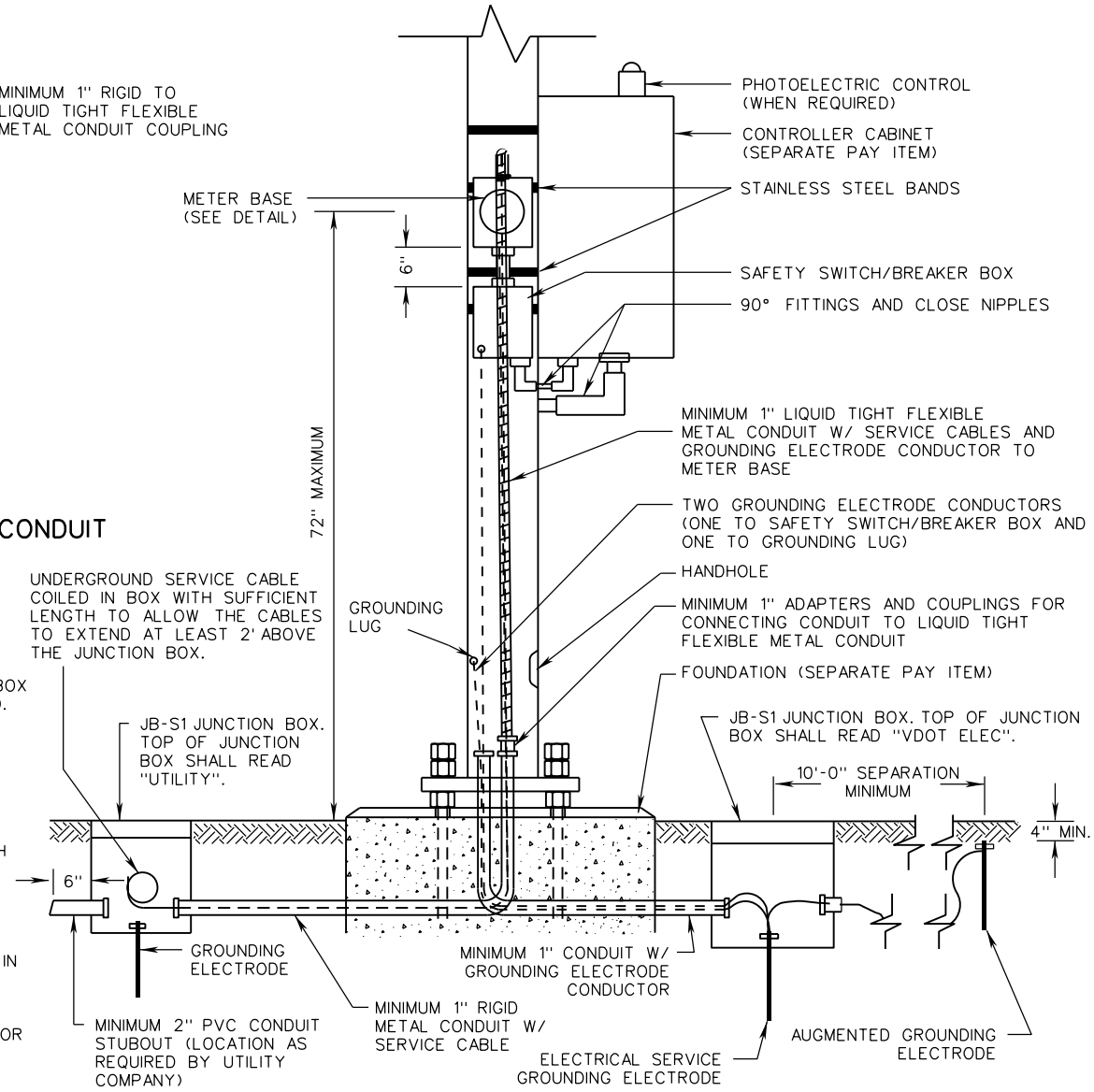

TYPE B (UNDERGROUND SERVICE) METAL POLE

NOTES:

1. LOCAL POWER UTILITY COMPANY WILL INSTALL SERVICE CABLE FROM THEIR POWER SOURCE TO THE JUNCTION BOX AND MAKE REQUIRED SPLICES TO THE CABLES PROVIDED.
2. POLE HEIGHT AND SIZE SHALL BE AS SPECIFIED IN THE CONTRACT DOCUMENTS.
3. THIS STANDARD IS APPLICABLE FOR ALL ELECTRICAL SERVICES OTHER THAN 480Y/277.
4. FOR ROADWAY LIGHTING SYSTEMS, ONLY SAFETY SWITCH SHALL BE USED.
5. ALL ELECTRICAL CONNECTIONS AND SPLICES SHALL BE TESTED FOR ELECTRICAL CONTINUITY.
6. CONDUIT AND CONDUCTOR SIZE SHALL BE AS SPECIFIED IN THE CONTRACT DOCUMENTS.
7. RIGID METAL RISER CONDUIT AND SERVICE CABLE SIZE SHALL BE AS SPECIFIED IN THE CONTRACT DOCUMENTS, OR AS SPECIFIED BY THE LOCAL POWER COMPANY.
8. WHEN REQUIRED BY THE CONTRACT DOCUMENTS, AN ELECTRICAL SERVICE WORK PAD SHALL BE PLACED IN FRONT OF THE SAFETY SWITCH/BREAKER BOX. ELECTRICAL SERVICE WORK PAD SHALL BE A SEPARATE PAY ITEM.

SPECIFICATION REFERENCE	A COPY OF THE ORIGINAL SEALED AND SIGNED DRAWING IS ON FILE IN THE CENTRAL OFFICE.	VDOT ROAD AND BRIDGE STANDARDS	
700	ELECTRICAL SERVICE INSTALLATION DETAILS VIRGINIA DEPARTMENT OF TRANSPORTATION	REVISION DATE 02/16	SHEET 2 OF 2 1312.11

SE-2

NOTES:

1. LOCAL POWER UTILITY COMPANY WILL INSTALL SERVICE CABLE FROM THEIR POWER SOURCE TO THE TOP OF THE OVERHEAD SERVICE POLE (FOR TYPE A OVERHEAD SERVICE) OR THE JUNCTION BOX (FOR TYPE B UNDERGROUND SERVICE) AND MAKE REQUIRED SPLICES TO THE CABLES PROVIDED.
2. POLE HEIGHT AND SIZE WILL BE AS SPECIFIED IN THE CONTRACT DOCUMENTS.
3. THIS STANDARD IS APPLICABLE FOR ALL ELECTRICAL SERVICES OTHER THAN 480Y/277.
4. FOR ROADWAY LIGHTING SYSTEMS, ONLY SAFETY SWITCH SHALL BE USED.
5. ALL ELECTRICAL CONNECTIONS AND SPLICES SHALL BE TESTED FOR ELECTRICAL CONTINUITY.
6. CONDUIT AND CONDUCTOR SIZE SHALL BE AS SPECIFIED IN THE CONTRACT DOCUMENTS.
7. RIGID METAL RISER CONDUIT AND SERVICE CABLE SIZE SHALL BE AS SPECIFIED IN THE CONTRACT DOCUMENTS, OR AS SPECIFIED BY THE LOCAL POWER COMPANY.
8. WHEN REQUIRED BY THE CONTRACT DOCUMENTS, AN ELECTRICAL SERVICE WORK PAD SHALL BE PLACED IN FRONT OF THE SAFETY SWITCH/BREAKER BOX. ELECTRICAL SERVICE WORK PAD SHALL BE A SEPARATE PAY ITEM.

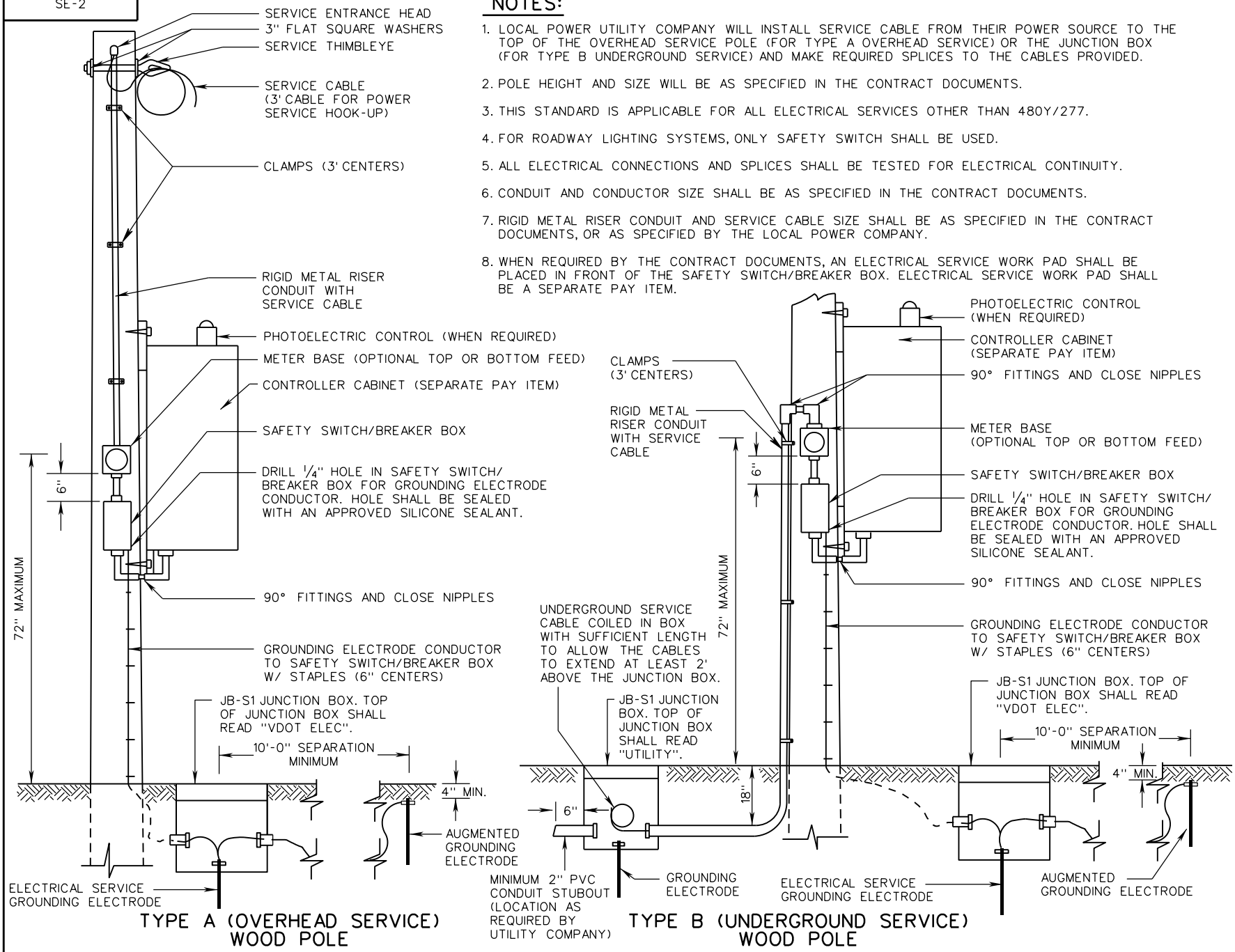

VDOT ROAD AND BRIDGE STANDARDS	A COPY OF THE ORIGINAL SEALED AND SIGNED DRAWING IS ON FILE IN THE CENTRAL OFFICE.	SPECIFICATION REFERENCE
SHEET 1 OF 1	ELECTRICAL SERVICE	
1312.20	INSTALLATION DETAILS	700
REVISION DATE 02/16	VIRGINIA DEPARTMENT OF TRANSPORTATION	

SE-3

NOTES:

1. LOCAL POWER UTILITY COMPANY WILL INSTALL SERVICE CABLE FROM THEIR POWER SOURCE TO THE TOP OF THE OVERHEAD SERVICE POLE AND MAKE REQUIRED SPLICES TO THE CABLES PROVIDED.
2. POLE HEIGHT AND SIZE WILL BE AS SPECIFIED IN THE CONTRACT DOCUMENTS.
3. THIS STANDARD IS APPLICABLE FOR ALL ELECTRICAL SERVICES OTHER THAN 480Y/277.
4. FOR ROADWAY LIGHTING SYSTEMS, ONLY SAFETY SWITCH SHALL BE USED.
5. ALL ELECTRICAL CONNECTIONS AND SPLICES SHALL BE TESTED FOR ELECTRICAL CONTINUITY.
6. CONDUIT AND CONDUCTOR SIZE SHALL BE AS SPECIFIED IN THE CONTRACT DOCUMENTS.
7. RIGID METAL RISER CONDUIT AND SERVICE CABLE SIZE SHALL BE AS SPECIFIED IN THE CONTRACT DOCUMENTS, OR AS SPECIFIED BY THE LOCAL POWER COMPANY.
8. WHEN REQUIRED BY THE CONTRACT DOCUMENTS, AN ELECTRICAL SERVICE WORK PAD SHALL BE PLACED IN FRONT OF THE SAFETY SWITCH/BREAKER BOX. ELECTRICAL SERVICE WORK PAD SHALL BE A SEPARATE PAY ITEM.
9. POLE AND CONTROLLER CABINET WILL BE SEPARATE PAY ITEMS.

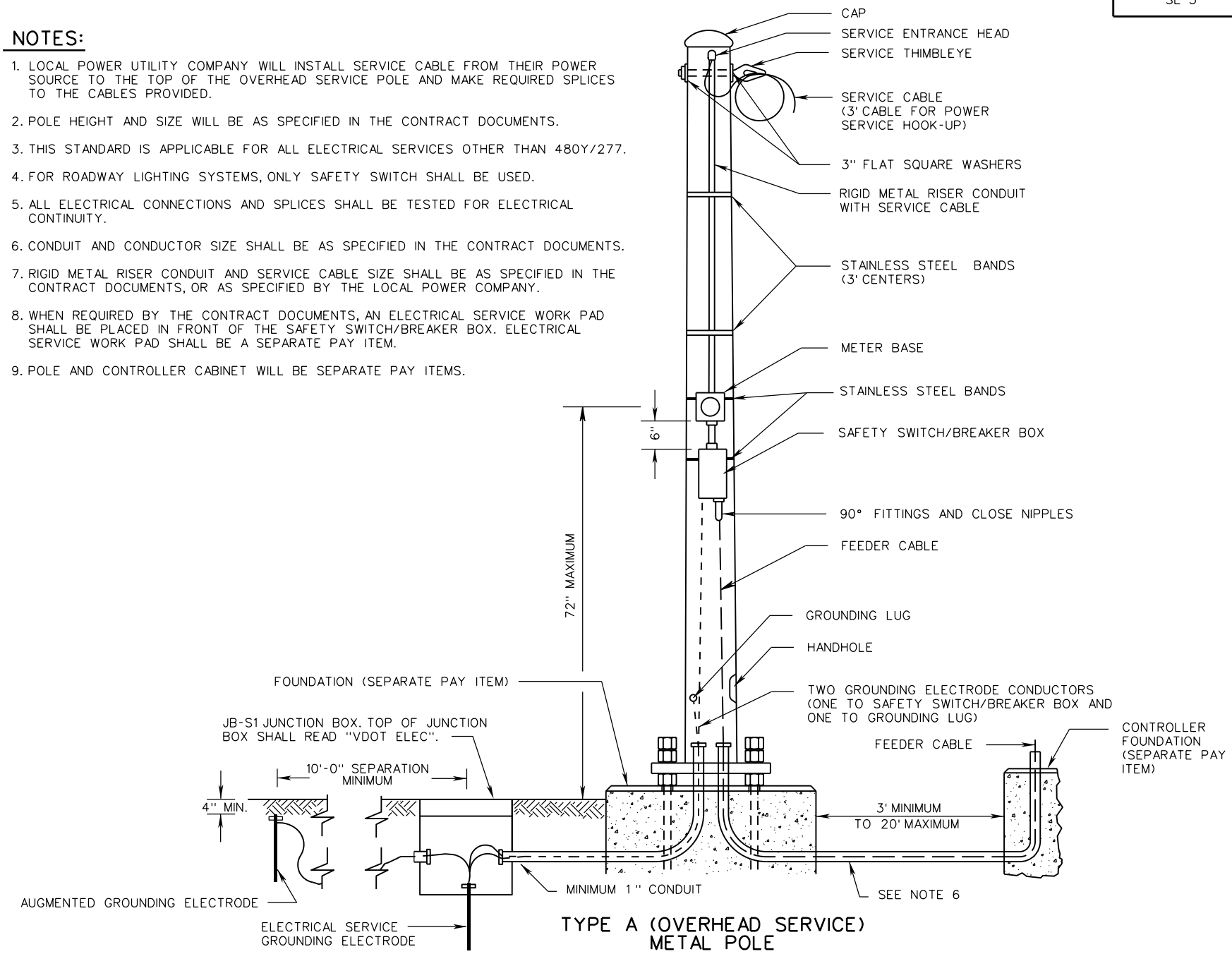

TYPE A (OVERHEAD SERVICE) METAL POLE

SPECIFICATION REFERENCE	A COPY OF THE ORIGINAL SEALED AND SIGNED DRAWING IS ON FILE IN THE CENTRAL OFFICE.	VDOT ROAD AND BRIDGE STANDARDS	
700	ELECTRICAL SERVICE INSTALLATION DETAILS VIRGINIA DEPARTMENT OF TRANSPORTATION	REVISION DATE 02/16	SHEET 1 OF 2 1312.30

SE-3

NOTES:

1. LOCAL POWER UTILITY COMPANY WILL INSTALL SERVICE CABLE FROM THEIR POWER SOURCE TO THE JUNCTION BOX AND MAKE REQUIRED SPLICES TO THE CABLES PROVIDED.
2. POLE HEIGHT AND SIZE WILL BE AS SPECIFIED IN THE CONTRACT DOCUMENTS.
3. THIS STANDARD IS APPLICABLE FOR ALL ELECTRICAL SERVICES OTHER THAN 480Y/277.
4. FOR ROADWAY LIGHTING SYSTEMS, ONLY SAFETY SWITCH SHALL BE USED.
5. ALL ELECTRICAL CONNECTIONS AND SPLICES SHALL BE TESTED FOR ELECTRICAL CONTINUITY.
6. CONDUIT AND CONDUCTOR SIZE SHALL BE AS SPECIFIED IN THE CONTRACT DOCUMENTS.
7. RIGID METAL RISER CONDUIT AND SERVICE CABLE SIZE SHALL BE AS SPECIFIED IN THE CONTRACT DOCUMENTS, OR AS SPECIFIED BY THE LOCAL POWER COMPANY.
8. WHEN REQUIRED BY THE CONTRACT DOCUMENTS, AN ELECTRICAL SERVICE WORK PAD SHALL BE PLACED IN FRONT OF THE SAFETY SWITCH/BREAKER BOX. ELECTRICAL SERVICE WORK PAD SHALL BE A SEPARATE PAY ITEM.

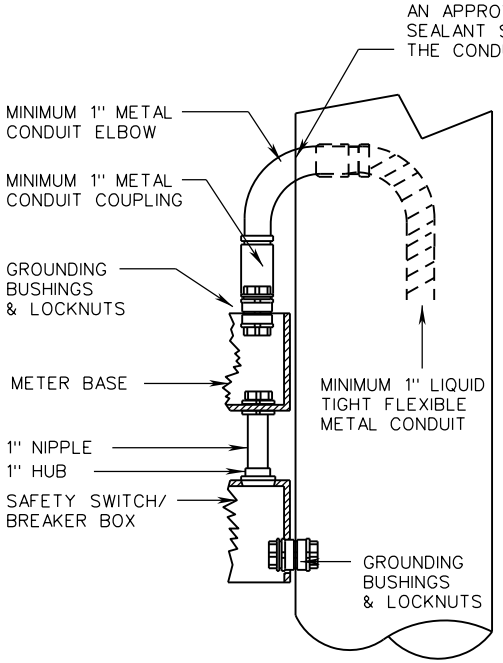

DETAIL FOR CONNECTION OF CONDUIT TO METER BASE

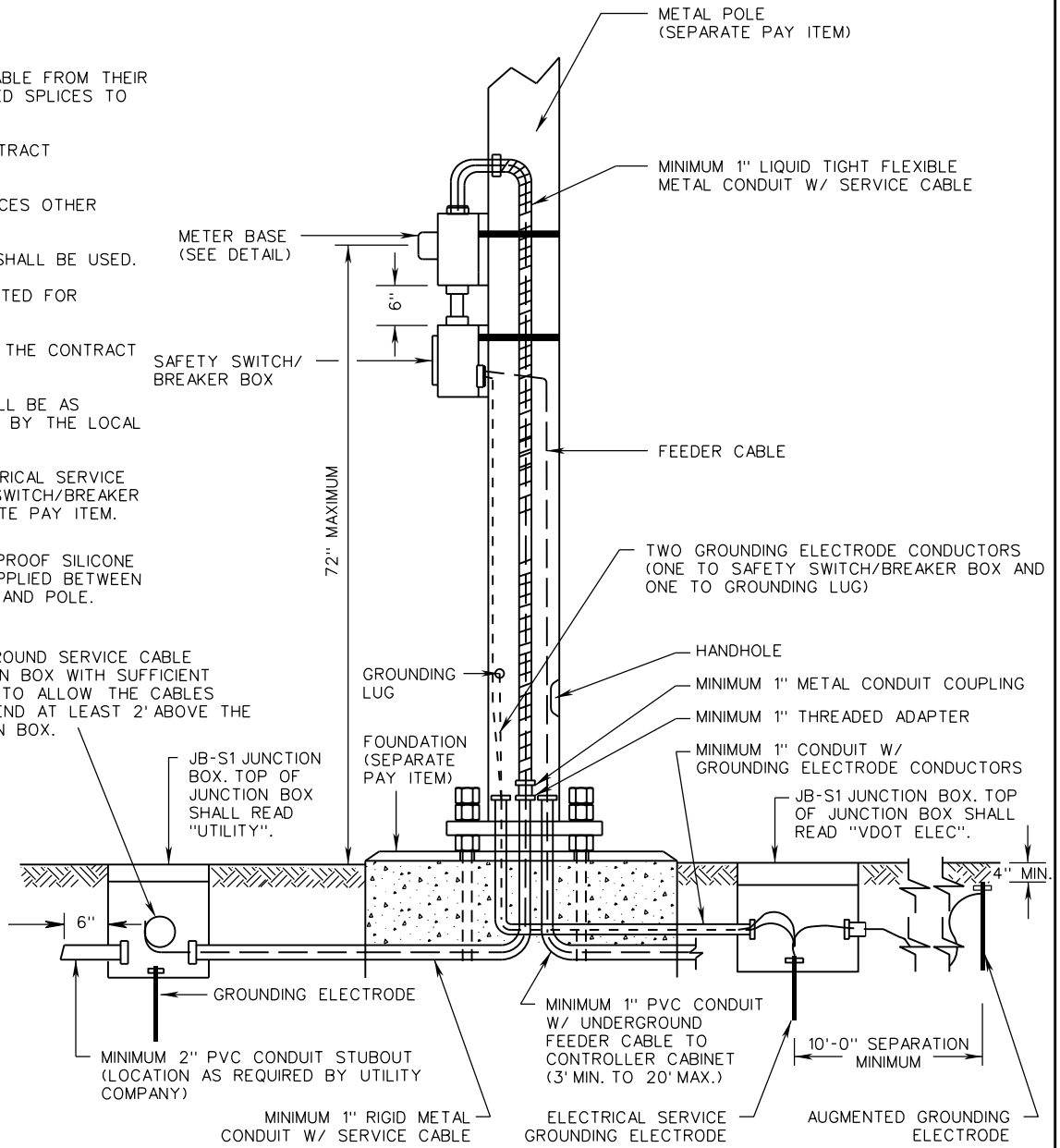

TYPE B (UNDERGROUND SERVICE) METAL POLE

VDOT ROAD AND BRIDGE STANDARDS	A COPY OF THE ORIGINAL SEALED AND SIGNED DRAWING IS ON FILE IN THE CENTRAL OFFICE.	SPECIFICATION REFERENCE
SHEET 2 OF 2	ELECTRICAL SERVICE	
REVISION DATE 02/16	INSTALLATION DETAILS	700
1312.31	VIRGINIA DEPARTMENT OF TRANSPORTATION	

SE-4

NOTES:

1. LOCAL POWER UTILITY COMPANY WILL INSTALL SERVICE CABLE FROM THEIR POWER SOURCE TO THE TOP OF THE OVERHEAD SERVICE POLE (FOR TYPE A OVERHEAD SERVICE) OR THE JUNCTION BOX (FOR TYPE B UNDERGROUND SERVICE) AND MAKE REQUIRED SPLICES TO THE CABLES PROVIDED.
2. POLE HEIGHT AND SIZE WILL BE AS SPECIFIED IN THE CONTRACT DOCUMENTS.
3. THIS STANDARD IS APPLICABLE FOR ALL ELECTRICAL SERVICES OTHER THAN 480Y/277.
4. FOR ROADWAY LIGHTING SYSTEMS, ONLY SAFETY SWITCH SHALL BE USED.
5. ALL ELECTRICAL CONNECTIONS AND SPLICES SHALL BE TESTED FOR ELECTRICAL CONTINUITY.
6. CONDUIT AND CONDUCTOR SIZE SHALL BE AS SPECIFIED IN THE CONTRACT DOCUMENTS.
7. RIGID METAL RISER CONDUIT AND SERVICE CABLE SIZE SHALL BE AS SPECIFIED IN THE CONTRACT DOCUMENTS, OR AS SPECIFIED BY THE LOCAL POWER COMPANY.
8. WHEN REQUIRED BY THE CONTRACT DOCUMENTS, AN ELECTRICAL SERVICE WORK PAD SHALL BE PLACED IN FRONT OF THE SAFETY SWITCH/BREAKER BOX. ELECTRICAL SERVICE WORK PAD SHALL BE A SEPARATE PAY ITEM.

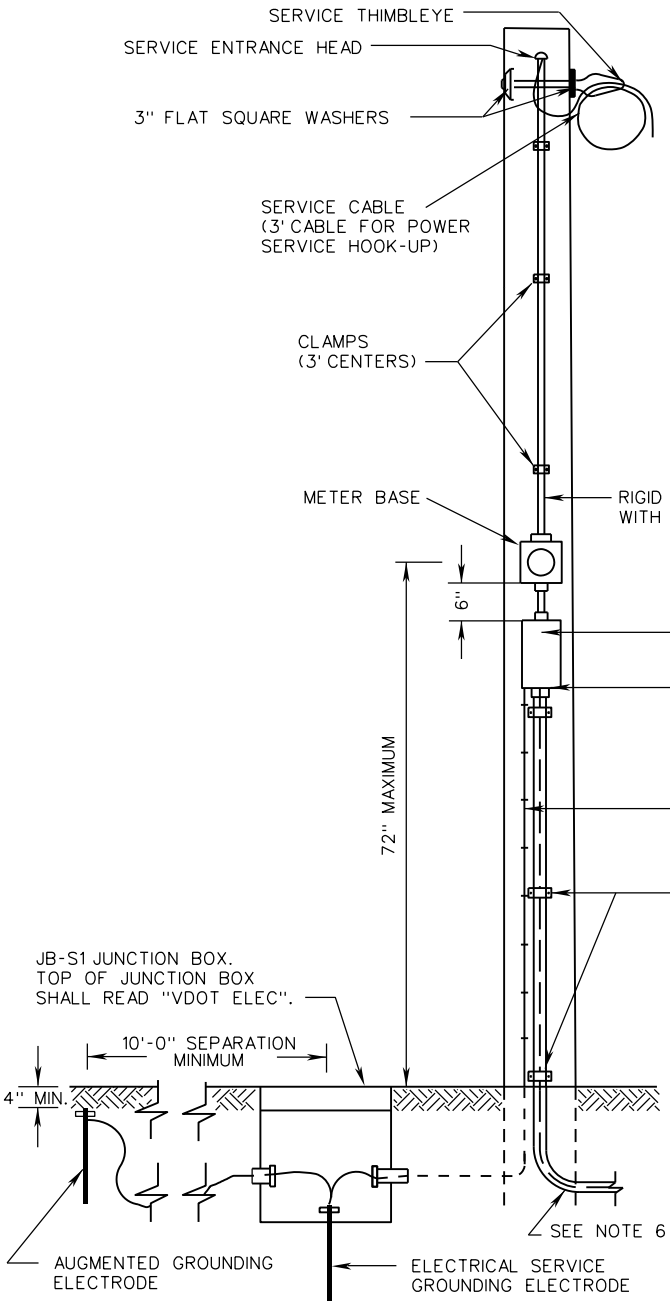

TYPE A (OVERHEAD SERVICE) WOOD POLE

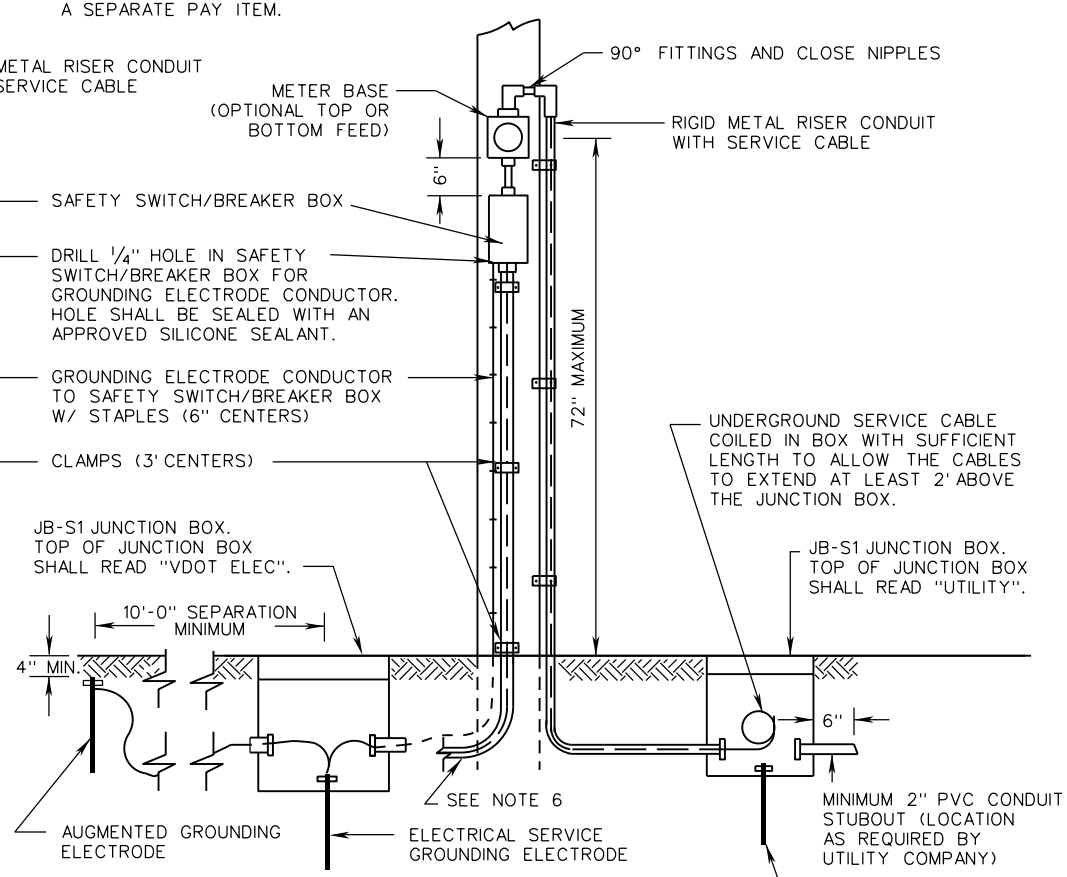

TYPE B (UNDERGROUND SERVICE) WOOD POLE

SPECIFICATION REFERENCE	A COPY OF THE ORIGINAL SEALED AND SIGNED DRAWING IS ON FILE IN THE CENTRAL OFFICE.	VDOT ROAD AND BRIDGE STANDARDS
700	ELECTRICAL SERVICE INSTALLATION DETAILS VIRGINIA DEPARTMENT OF TRANSPORTATION	REVISION DATE 02/16 — SHEET 1 OF 1 — 1312.40

SE-5

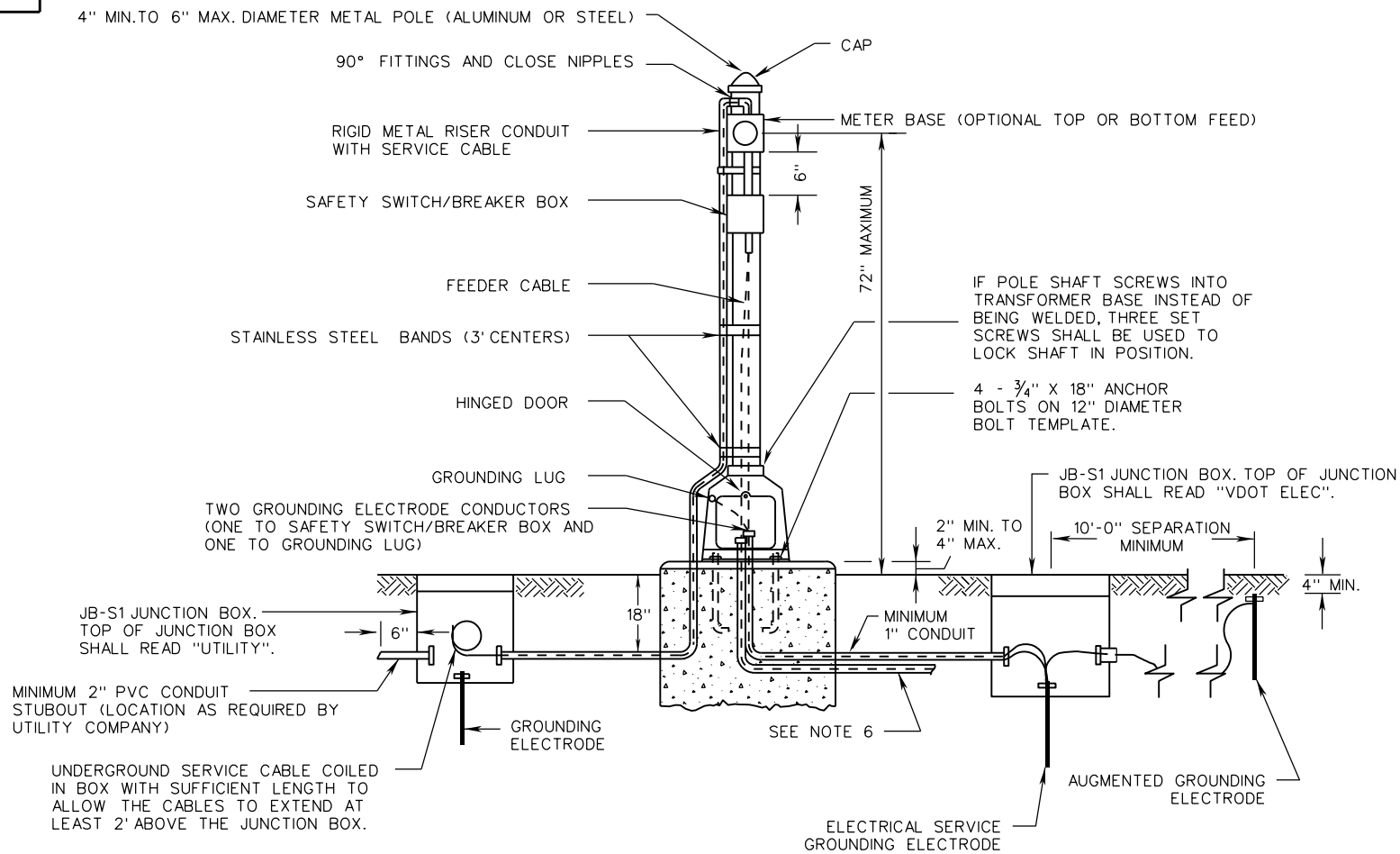

NOTES:

1. LOCAL POWER UTILITY COMPANY WILL INSTALL SERVICE CABLE FROM THEIR POWER SOURCE TO THE JUNCTION BOX AND MAKE REQUIRED SPLICES TO THE CABLES PROVIDED.
2. THIS STANDARD IS APPLICABLE FOR ALL ELECTRICAL SERVICES OTHER THAN 480Y/277.
3. FOR ROADWAY LIGHTING SYSTEMS, ONLY SAFETY SWITCH SHALL BE USED.
4. ALL ELECTRICAL CONNECTIONS AND SPLICES SHALL BE TESTED FOR ELECTRICAL CONTINUITY.
5. FOUNDATION SHALL BE CLASS A3 CONCRETE, 24X24 SQUARE OR 24" DIAMETER AND 24" DEEP, AND COST OF FOUNDATION SHALL BE INCLUDED WITH THE PAY ITEM FOR ELECTRICAL SERVICE.
6. CONDUIT AND CONDUCTOR SIZE SHALL BE AS SPECIFIED IN THE CONTRACT DOCUMENTS.
7. RIGID METAL RISER CONDUIT AND SERVICE CABLE SIZE SHALL BE AS SPECIFIED IN THE CONTRACT DOCUMENTS, OR AS SPECIFIED BY THE LOCAL POWER COMPANY.
8. WHEN REQUIRED BY THE CONTRACT DOCUMENTS, AN ELECTRICAL SERVICE WORK PAD SHALL BE PLACED IN FRONT OF THE SAFETY SWITCH/BREAKER BOX. ELECTRICAL SERVICE WORK PAD SHALL BE A SEPARATE PAY ITEM.
9. STAINLESS STEEL BANDS REQUIRED FOR METER BASE AND SAFETY SWITCH/BREAKER BOX.
10. ANCHOR BOLTS AND BOLT TEMPLATE SHALL BE FURNISHED BY POLE MANUFACTURER, AND POLE SHALL BE CENTERED ON FOUNDATION.

VDOT ROAD AND BRIDGE STANDARDS	A COPY OF THE ORIGINAL SEALED AND SIGNED DRAWING IS ON FILE IN THE CENTRAL OFFICE. ELECTRICAL SERVICE INSTALLATION DETAILS VIRGINIA DEPARTMENT OF TRANSPORTATION	SPECIFICATION REFERENCE
SHEET 1 OF 1 1312.50	REVISION DATE 02/16	700

SE-6

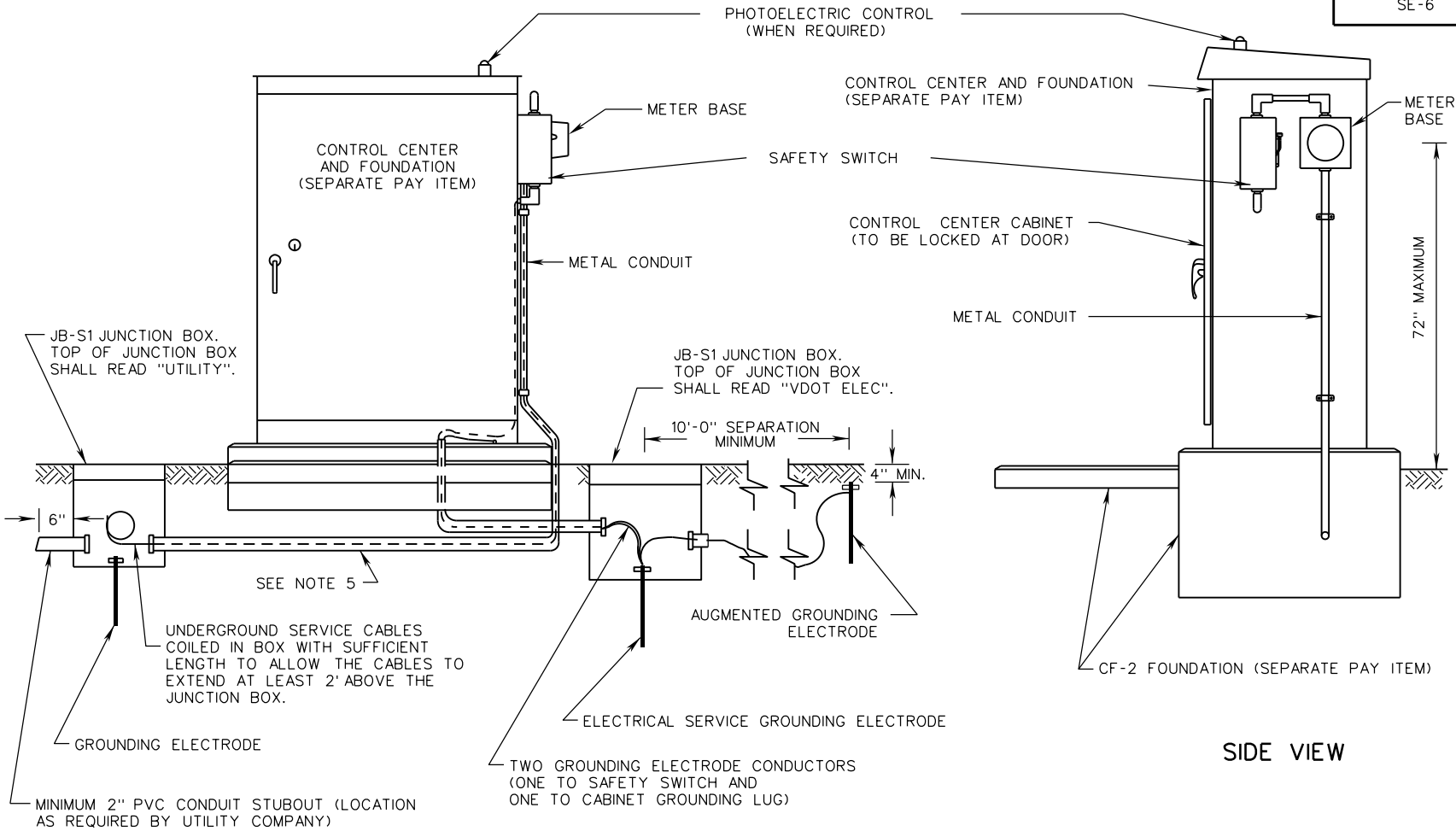

NOTES:

1. LOCAL POWER UTILITY COMPANY WILL INSTALL SERVICE CABLE FROM THEIR POWER SOURCE TO THE JUNCTION BOX AND MAKE REQUIRED SPLICES TO THE CABLES PROVIDED.
2. THIS STANDARD IS APPLICABLE FOR ALL ELECTRICAL SERVICES OTHER THAN 480Y/277.
3. ALL ELECTRICAL CONNECTIONS AND SPLICES SHALL BE TESTED FOR ELECTRICAL CONTINUITY.
4. THE CONDUIT AND SERVICE CABLE SHALL EXTEND FROM THE CABINET TO THE UTILITY JUNCTION BOX.
5. CONDUIT AND CONDUCTOR SIZE SHALL BE AS SPECIFIED IN THE CONTRACT DOCUMENTS.
6. RIGID METAL RISER CONDUIT AND SERVICE CABLE SIZE SHALL BE AS SPECIFIED IN THE CONTRACT DOCUMENTS, OR AS SPECIFIED BY THE LOCAL POWER COMPANY.
7. WHEN REQUIRED BY THE CONTRACT DOCUMENTS, AN ELECTRICAL SERVICE WORK PAD SHALL BE PLACED IN FRONT OF THE SAFETY SWITCH/BREAKER BOX. ELECTRICAL SERVICE WORK PAD SHALL BE A SEPARATE PAY ITEM.

SPECIFICATION REFERENCE	A COPY OF THE ORIGINAL SEALED AND SIGNED DRAWING IS ON FILE IN THE CENTRAL OFFICE.	VDOT ROAD AND BRIDGE STANDARDS	
700	ELECTRICAL SERVICE INSTALLATION DETAILS VIRGINIA DEPARTMENT OF TRANSPORTATION	REVISION DATE 02/16	SHEET 1 OF 1 1312.60

SE-7

NOTES:

1. LOCAL POWER UTILITY COMPANY WILL INSTALL SERVICE POWER UTILITY CABLE FROM THEIR POWER SOURCE TO THE JUNCTION BOX AND MAKE REQUIRED SPLICES TO THE CABLES PROVIDED.
2. THIS STANDARD IS APPLICABLE FOR ALL ELECTRICAL SERVICES OTHER THAN 480Y/277.
3. FOR ROADWAY LIGHTING SYSTEMS, ONLY SAFETY SWITCH SHALL BE USED.
4. ALL ELECTRICAL CONNECTIONS AND SPLICES SHALL BE TESTED FOR ELECTRICAL CONTINUITY.
5. CONDUIT AND CONDUCTOR SIZE SHALL BE AS SPECIFIED IN THE CONTRACT DOCUMENTS.
6. RIGID METAL RISER CONDUIT AND SERVICE CABLE SIZE SHALL BE AS SPECIFIED IN THE CONTRACT DOCUMENTS, OR AS SPECIFIED BY THE LOCAL POWER COMPANY.
7. WHEN REQUIRED BY THE CONTRACT DOCUMENTS, AN ELECTRICAL SERVICE WORK PAD SHALL BE PLACED IN FRONT OF THE SAFETY SWITCH/BREAKER BOX. ELECTRICAL SERVICE WORK PAD SHALL BE A SEPARATE PAY ITEM.
8. RIGID MINIMUM 1" NIPPLE, THREADED AT BOTH ENDS, HELD IN PLACE WITH BONDING BUSHING AND LOCK NUT. ADDITIONAL 2" LAG SCREWS TO BE USED TO SECURE SAFETY SWITCH/BREAKER BOX AND METER BASE TO WOOD POST. FOUR SCREWS TO BE USED WITH EACH.

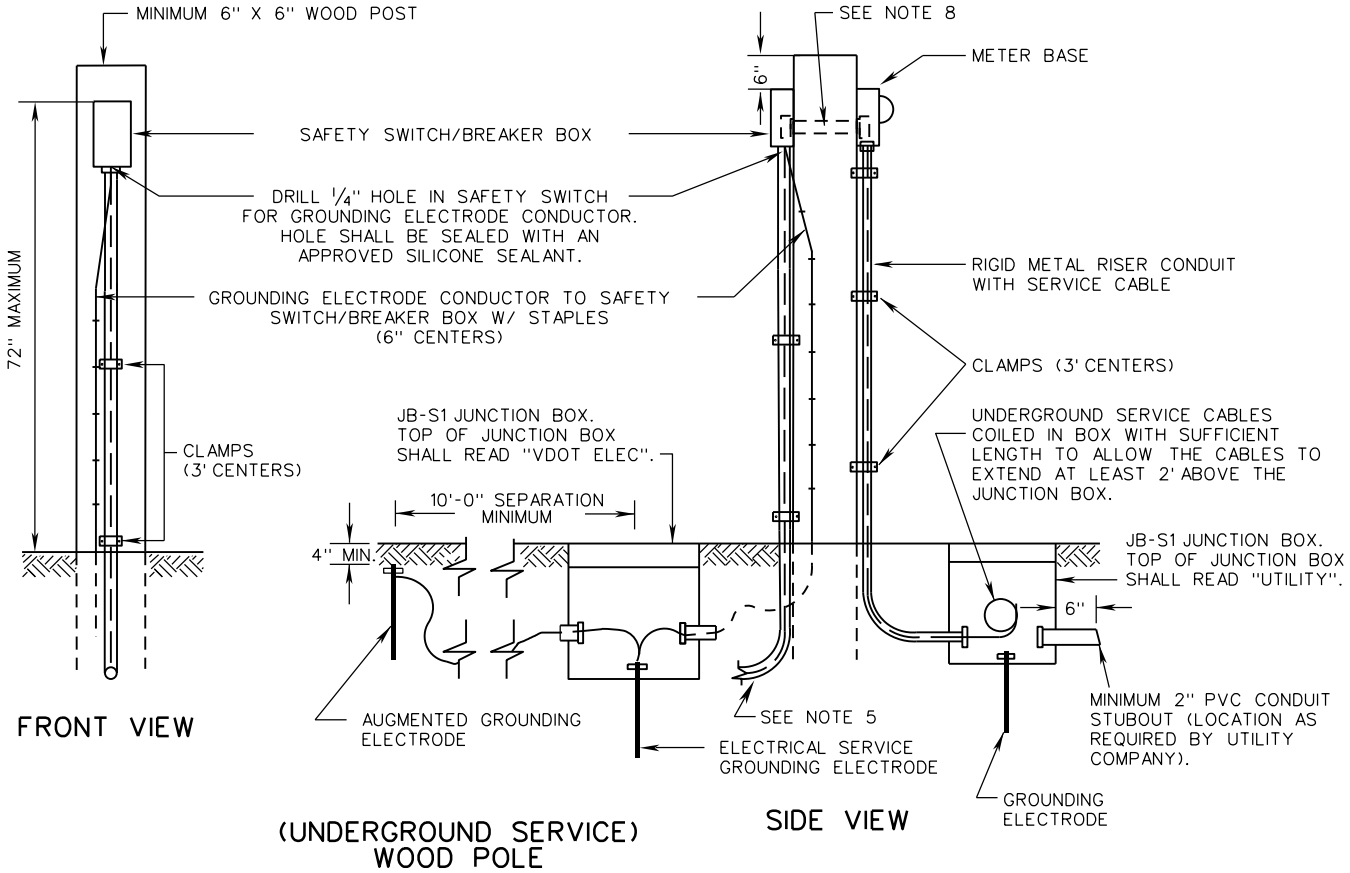

VDOT ROAD AND BRIDGE STANDARDS	A COPY OF THE ORIGINAL SEALED AND SIGNED DRAWING IS ON FILE IN THE CENTRAL OFFICE.	SPECIFICATION REFERENCE
SHEET 1 OF 1	ELECTRICAL SERVICE	
REVISION DATE 02/16	INSTALLATION DETAILS	700
1312.70	VIRGINIA DEPARTMENT OF TRANSPORTATION	

SE-8

NOTES:

1. LOCAL POWER UTILITY COMPANY WILL INSTALL SERVICE CABLE FROM THEIR POWER SOURCE TO THE TOP OF THE OVERHEAD SERVICE POLE (FOR TYPE A OVERHEAD SERVICE) OR THE JUNCTION BOX (FOR TYPE B UNDERGROUND SERVICE) AND MAKE REQUIRED SPLICES TO THE CABLES PROVIDED.
2. POLE HEIGHT AND SIZE WILL BE AS SPECIFIED IN THE CONTRACT DOCUMENTS.
3. THIS STANDARD IS APPLICABLE FOR ALL ELECTRICAL SERVICES OTHER THAN 480Y/277.
4. FOR ROADWAY LIGHTING SYSTEMS, ONLY SAFETY SWITCH SHALL BE USED.
5. ALL ELECTRICAL CONNECTIONS AND SPLICES SHALL BE TESTED FOR ELECTRICAL CONTINUITY.
6. CONDUIT AND CONDUCTOR SIZE SHALL BE AS SPECIFIED IN THE CONTRACT DOCUMENTS.
7. RIGID METAL RISER CONDUIT AND SERVICE CABLE SIZE SHALL BE AS SPECIFIED IN THE CONTRACT DOCUMENTS, OR AS SPECIFIED BY THE LOCAL POWER COMPANY.
8. WHEN REQUIRED BY THE CONTRACT DOCUMENTS, AN ELECTRICAL SERVICE WORK PAD SHALL BE PLACED IN FRONT OF THE SAFETY SWITCH/BREAKER BOX. ELECTRICAL SERVICE WORK PAD SHALL BE A SEPARATE PAY ITEM.

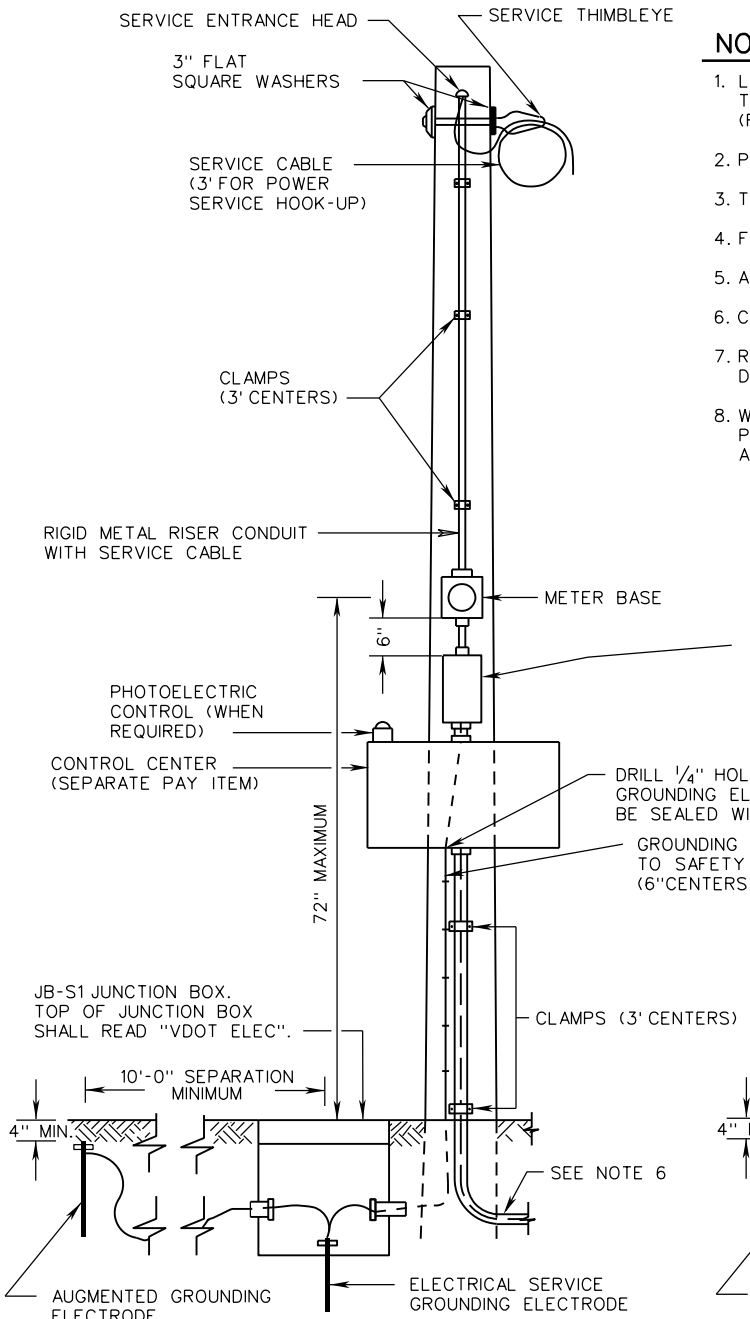

TYPE A (OVERHEAD SERVICE) WOOD POLE

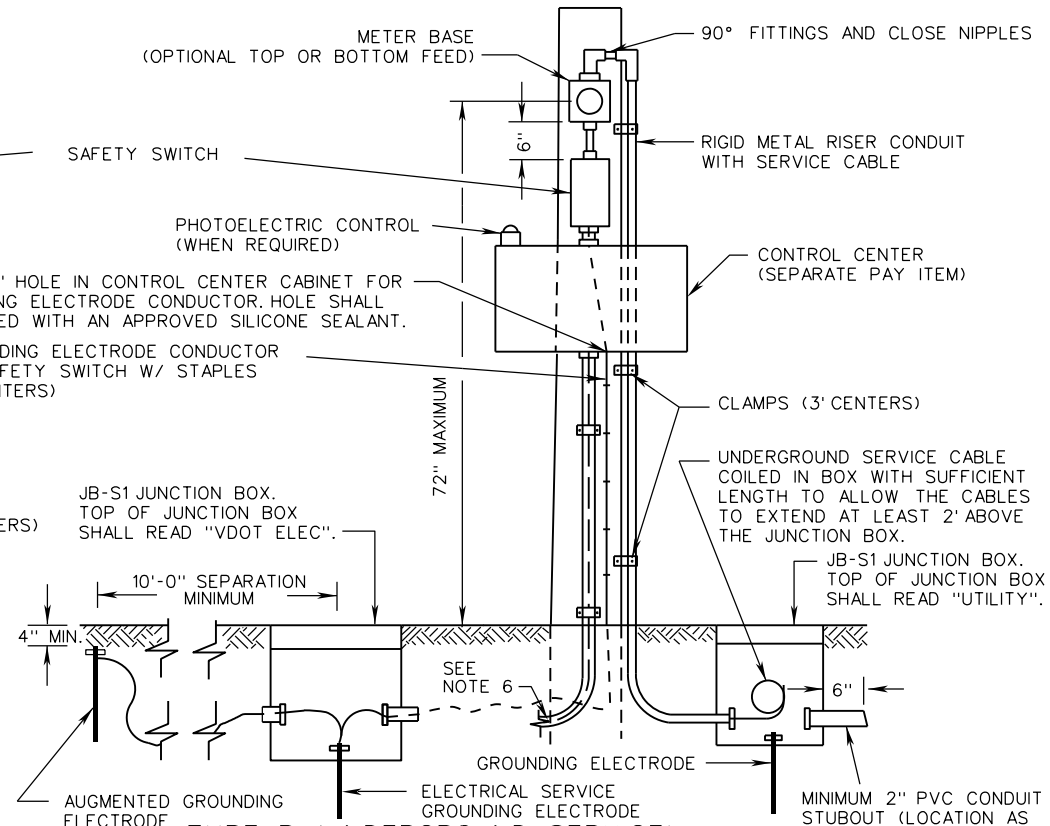

TYPE B (UNDERGROUND SERVICE) WOOD POLE

SPECIFICATION REFERENCE	A COPY OF THE ORIGINAL SEALED AND SIGNED DRAWING IS ON FILE IN THE CENTRAL OFFICE.	VDOT ROAD AND BRIDGE STANDARDS
700	ELECTRICAL SERVICE INSTALLATION DETAILS VIRGINIA DEPARTMENT OF TRANSPORTATION	REVISION DATE 02/16 — SHEET 1 OF 1 — 1312.80

SE-9

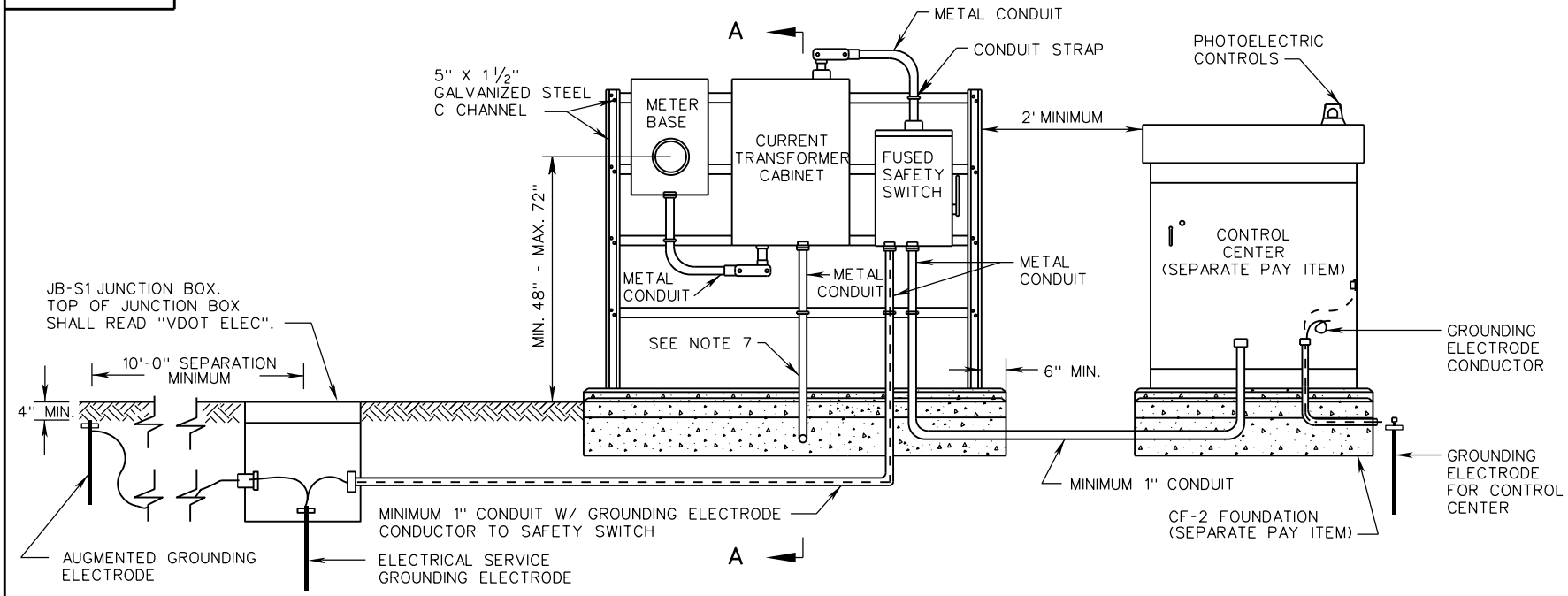

TYPE A

NOTES:

1. LOCAL POWER UTILITY COMPANY WILL INSTALL SERVICE CABLE FROM THEIR POWER SOURCE TO THE CURRENT TRANSFORMER CABINET AND METER BASE THEN MAKE REQUIRED SPLICES TO THE CABLES PROVIDED.
2. THIS STANDARD IS APPLICABLE FOR 480Y/277 ELECTRICAL SERVICE ONLY.
3. ALL ELECTRICAL CONNECTIONS AND SPLICES SHALL BE TESTED FOR ELECTRICAL CONTINUITY.
4. CONDUIT AND CONDUCTOR SIZE SHALL BE AS SPECIFIED IN THE CONTRACT DOCUMENTS.
5. RIGID METAL RISER CONDUIT AND SERVICE CABLE SIZE SHALL BE AS SPECIFIED IN THE CONTRACT DOCUMENTS, OR AS SPECIFIED BY THE LOCAL POWER COMPANY.
6. SAFETY SWITCH, METER BASE, WIREWAY, CURRENT TRANSFORMER CABINET AND CONTROL CENTER SHALL BE ATTACHED TO THE CHANNELING WITH ⅜" GALVANIZED BOLTS, LOCK WASHERS AND NUTS. FOUR CROSS CHANNELS SHALL BE UTILIZED.
7. MINIMUM 2" METAL CONDUIT SHALL BE STUBBED OUT 6" PAST CONCRETE FOUNDATION PAD. LOCATION OF THE STUBBED CONDUIT SHALL BE AS REQUIRED BY THE LOCAL POWER COMPANY.
8. THE CONTRACTOR SHALL LEAVE A SUFFICIENT AMOUNT OF CONDUCTOR CABLE COILED INSIDE THE CURRENT TRANSFORMER CABINET TO PERMIT THE LOCAL POWER COMPANY TO MAKE THEIR CONNECTION.
9. SERVICE ENTRANCE FOUNDATION, INCLUDING THE CONCRETE PAD, IS INCLUDED IN THE SE-9 PAY ITEM.

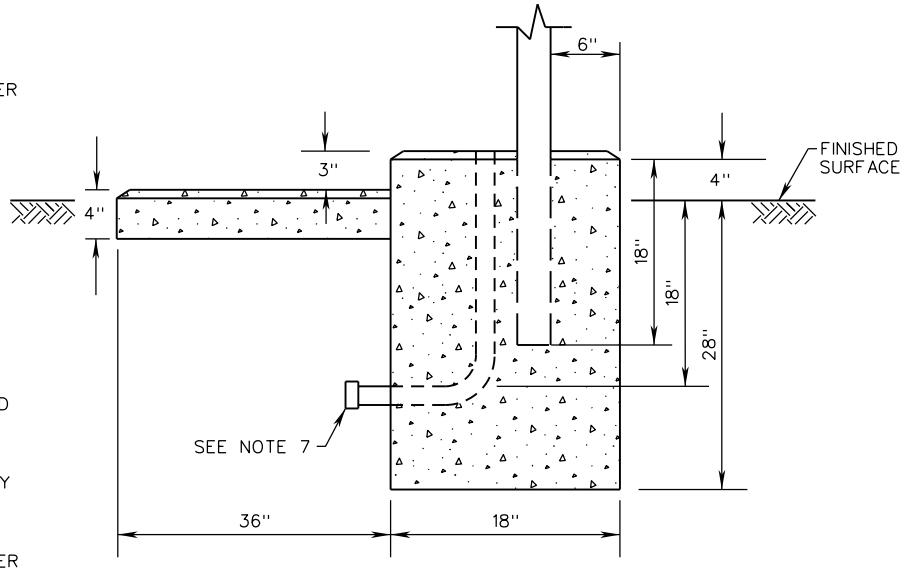

SECTION A-A
SERVICE ENTRANCE FOUNDATION DETAIL

VDOT
ROAD AND BRIDGE STANDARDS

SHEET 1 OF 2
1312.90

REVISION DATE
02/16

A COPY OF THE ORIGINAL SEALED AND SIGNED DRAWING IS ON FILE IN THE CENTRAL OFFICE.

ELECTRICAL SERVICE
INSTALLATION DETAILS

VIRGINIA DEPARTMENT OF TRANSPORTATION

SPECIFICATION REFERENCE
700

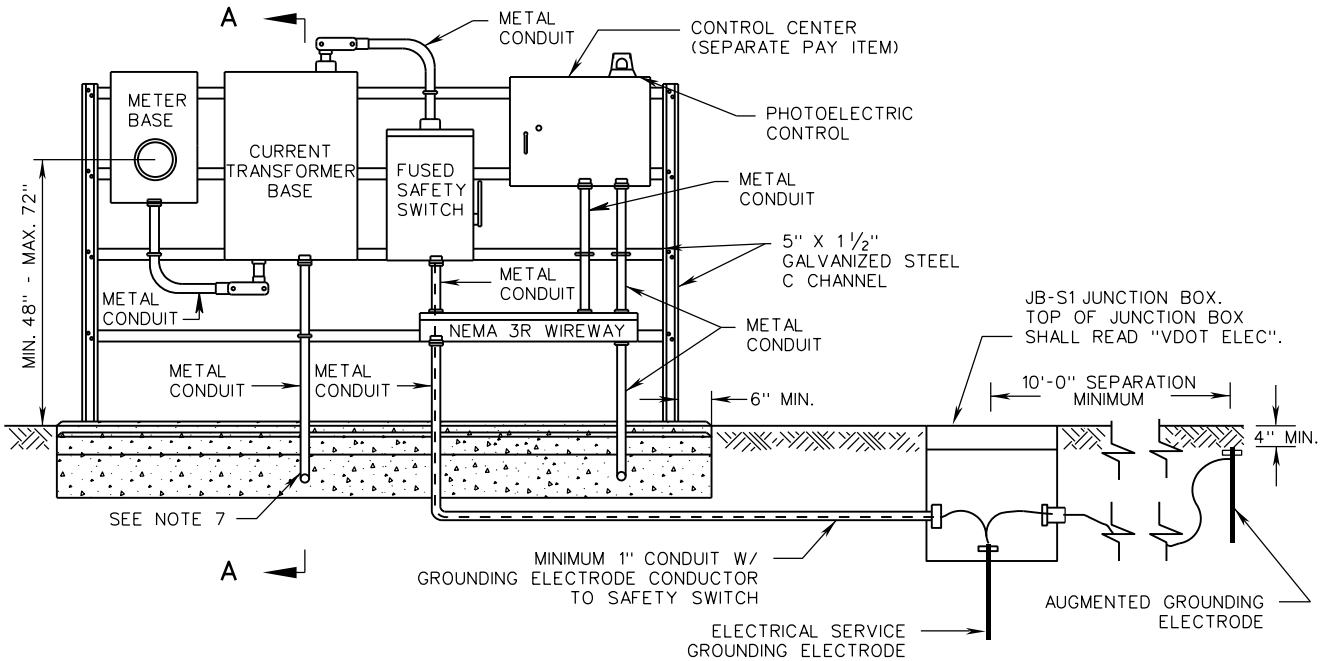

TYPE B

NOTES:

1. LOCAL POWER UTILITY COMPANY WILL INSTALL SERVICE CABLE FROM THEIR POWER SOURCE TO THE CURRENT TRANSFORMER CABINET AND METER BASE THEN MAKE REQUIRED SPLICES TO THE CABLES PROVIDED.
2. THIS STANDARD IS APPLICABLE FOR 480Y/277 ELECTRICAL SERVICE ONLY.
3. ALL ELECTRICAL CONNECTIONS AND SPLICES SHALL BE TESTED FOR ELECTRICAL CONTINUITY.
4. CONDUIT AND CONDUCTOR SIZE SHALL BE AS SPECIFIED IN THE CONTRACT DOCUMENTS.
5. RIGID METAL RISER CONDUIT AND SERVICE CABLE SIZE SHALL BE AS SPECIFIED IN THE CONTRACT DOCUMENTS, OR AS SPECIFIED BY THE LOCAL POWER COMPANY.
6. SAFETY SWITCH, METER BASE, WIREWAY, CURRENT TRANSFORMER CABINET AND CONTROL CENTER SHALL BE ATTACHED TO THE CHANNELING WITH 3/8" GALVANIZED BOLTS, LOCK WASHERS AND NUTS. FOUR CROSS CHANNELS SHALL BE UTILIZED.
7. MINIMUM 2" METAL CONDUIT SHALL BE STUBBED OUT 6" PAST CONCRETE FOUNDATION PAD. LOCATION OF THE STUBBED CONDUIT SHALL BE AS REQUIRED BY THE LOCAL POWER COMPANY.
8. THE CONTRACTOR SHALL LEAVE A SUFFICIENT AMOUNT OF CONDUCTOR CABLE COILED INSIDE THE CURRENT TRANSFORMER CABINET TO PERMIT THE LOCAL POWER COMPANY TO MAKE THEIR CONNECTION.
9. SERVICE ENTRANCE FOUNDATION, INCLUDING THE CONCRETE PAD, IS INCLUDED IN THE SE-9 PAY ITEM.

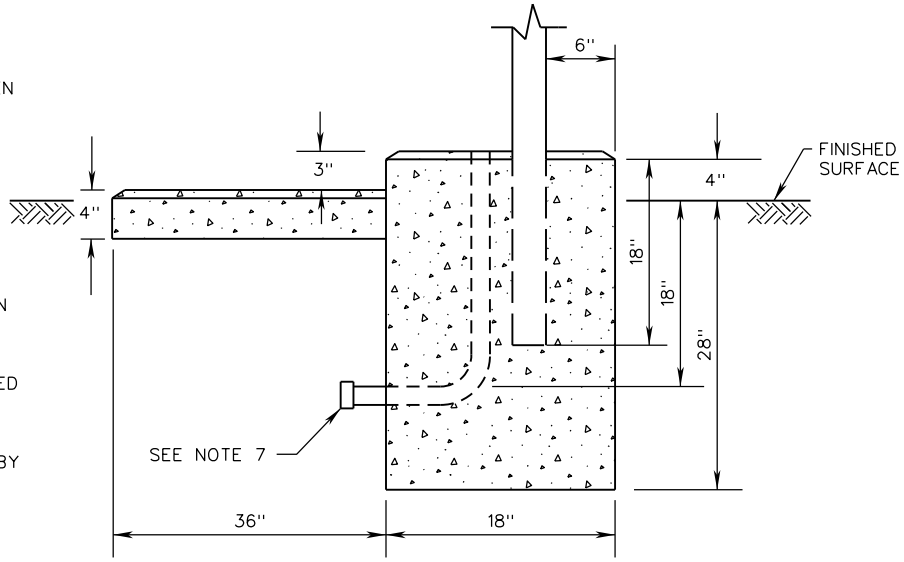

SECTION A-A
SERVICE ENTRANCE FOUNDATION DETAIL

SPECIFICATION REFERENCE	A COPY OF THE ORIGINAL SEALED AND SIGNED DRAWING IS ON FILE IN THE CENTRAL OFFICE.	VDOT ROAD AND BRIDGE STANDARDS	
700	ELECTRICAL SERVICE INSTALLATION DETAILS VIRGINIA DEPARTMENT OF TRANSPORTATION	REVISION DATE 02/16	SHEET 2 OF 2 1312.91

STANDARD

THIS PAGE INTENTIONALLY LEFT BLANK

VDOT
ROAD AND BRIDGE STANDARDS

SHEET 1 OF 1

REVISION DATE

TITLE

VIRGINIA DEPARTMENT OF TRANSPORTATION

SPECIFICATION REFERENCE

SE-10

NOTES:

1. LOCAL POWER UTILITY COMPANY WILL INSTALL SERVICE CABLE FROM THEIR POWER SOURCE TO THE TOP OF THE OVERHEAD SERVICE POLE (FOR TYPE A OVERHEAD SERVICE) OR THE JUNCTION BOX (FOR TYPE B UNDERGROUND SERVICE) AND MAKE REQUIRED SPLICES TO THE CABLES PROVIDED.
2. POLE HEIGHT AND SIZE WILL BE AS SPECIFIED IN THE CONTRACT DOCUMENTS.
3. THIS STANDARD IS APPLICABLE FOR ALL ELECTRICAL SERVICES OTHER THAN 480Y/277.
4. FOR ROADWAY LIGHTING SYSTEMS, ONLY SAFETY SWITCH SHALL BE USED.
5. ALL ELECTRICAL CONNECTIONS AND SPLICES SHALL BE TESTED FOR ELECTRICAL CONTINUITY.
6. CONDUIT AND CONDUCTOR SIZE SHALL BE AS SPECIFIED IN THE CONTRACT DOCUMENTS.
7. RIGID METAL RISER CONDUIT AND SERVICE CABLE SIZE SHALL BE AS SPECIFIED IN THE CONTRACT DOCUMENTS, OR AS SPECIFIED BY THE LOCAL POWER COMPANY.
8. WHEN REQUIRED BY THE CONTRACT DOCUMENTS, AN ELECTRICAL SERVICE WORK PAD SHALL BE PLACED IN FRONT OF THE SAFETY SWITCH/BREAKER BOX. ELECTRICAL SERVICE WORK PAD SHALL BE A SEPARATE PAY ITEM.

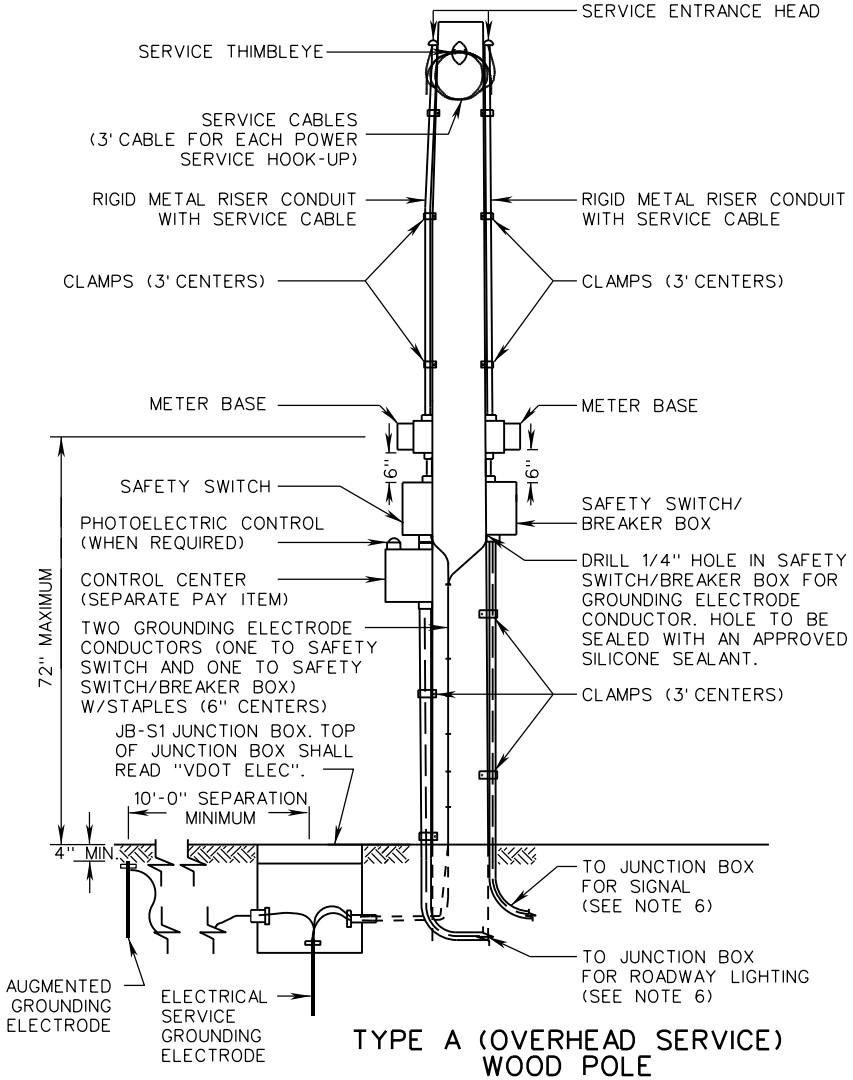

TYPE A (OVERHEAD SERVICE) WOOD POLE

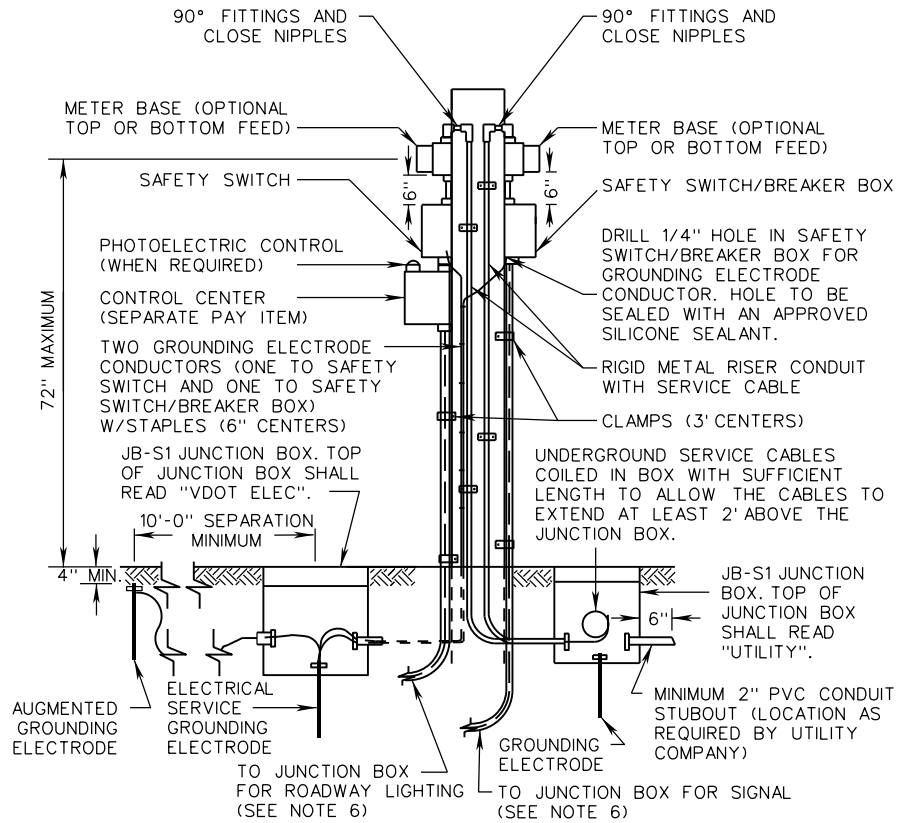

TYPE B (UNDERGROUND SERVICE) WOOD POLE

SPECIFICATION REFERENCE	A COPY OF THE ORIGINAL SEALED AND SIGNED DRAWING IS ON FILE IN THE CENTRAL OFFICE.	VDOT ROAD AND BRIDGE STANDARDS
700	ELECTRICAL SERVICE INSTALLATION DETAILS VIRGINIA DEPARTMENT OF TRANSPORTATION	REVISION DATE 02/16 · SHEET 1 OF 1 · 1313.10

SE-11

NOTES:

1. LOCAL POWER UTILITY COMPANY WILL INSTALL SERVICE CABLE FROM THEIR POWER SOURCE TO THE TOP OF THE OVERHEAD POLE AND MAKE REQUIRED SPLICES TO THE CABLES PROVIDED.
2. POLE HEIGHT AND SIZE WILL BE AS SPECIFIED IN THE CONTRACT DOCUMENTS.
3. THIS STANDARD IS APPLICABLE FOR ALL ELECTRICAL SERVICES OTHER THAN 480Y/277.
4. FOR ROADWAY LIGHTING SYSTEMS, ONLY SAFETY SWITCH SHALL BE USED.
5. ALL ELECTRICAL CONNECTIONS AND SPLICES SHALL BE TESTED FOR ELECTRICAL CONTINUITY.
6. EACH ELECTRICAL SERVICE FEEDER SHALL BE SEPARATED AND TAGGED IN ACCESSIBLE LOCATIONS INSIDE THE POLE TO PERMANENTLY IDENTIFY LIGHTING AND SIGNAL POWER CABLES.
7. CONDUIT AND CONDUCTOR SIZE SHALL BE AS SPECIFIED IN THE CONTRACT DOCUMENTS.
8. RIGID METAL RISER CONDUIT AND SERVICE CABLE SIZE SHALL BE AS SPECIFIED IN THE CONTRACT DOCUMENTS, OR AS SPECIFIED BY THE LOCAL POWER COMPANY.
9. WHEN REQUIRED BY THE CONTRACT DOCUMENTS, AN ELECTRICAL SERVICE WORK PAD SHALL BE PLACED IN FRONT OF THE SAFETY SWITCH/BREAKER BOX. ELECTRICAL SERVICE WORK PAD SHALL BE A SEPARATE PAY ITEM.

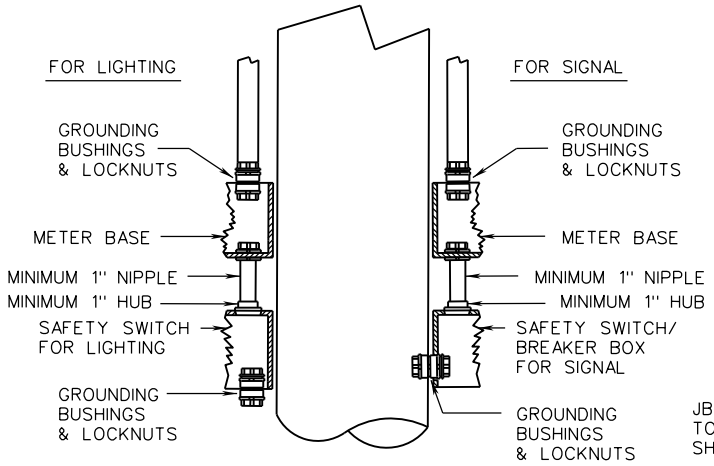

DETAIL FOR CONNECTION OF CONDUIT TO METER BASE FOR LIGHTING AND SIGNAL

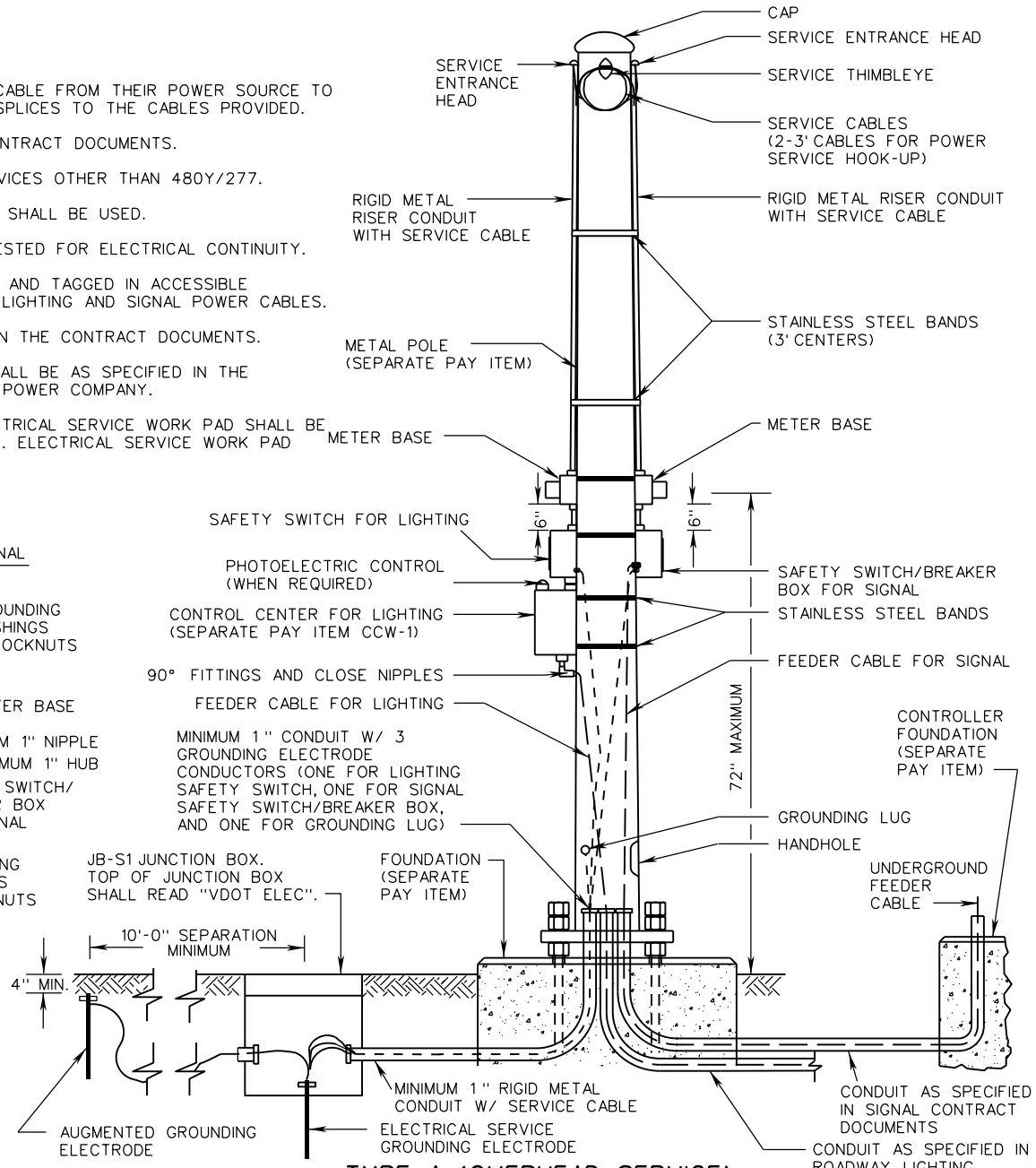

TYPE A (OVERHEAD SERVICE) METAL POLE

VDOT ROAD AND BRIDGE STANDARDS	A COPY OF THE ORIGINAL SEALED AND SIGNED DRAWING IS ON FILE IN THE CENTRAL OFFICE.	SPECIFICATION REFERENCE
SHEET 1 OF 2	ELECTRICAL SERVICE	
REVISION DATE 02/16	INSTALLATION DETAILS	700
1313.20	VIRGINIA DEPARTMENT OF TRANSPORTATION	

SE-11

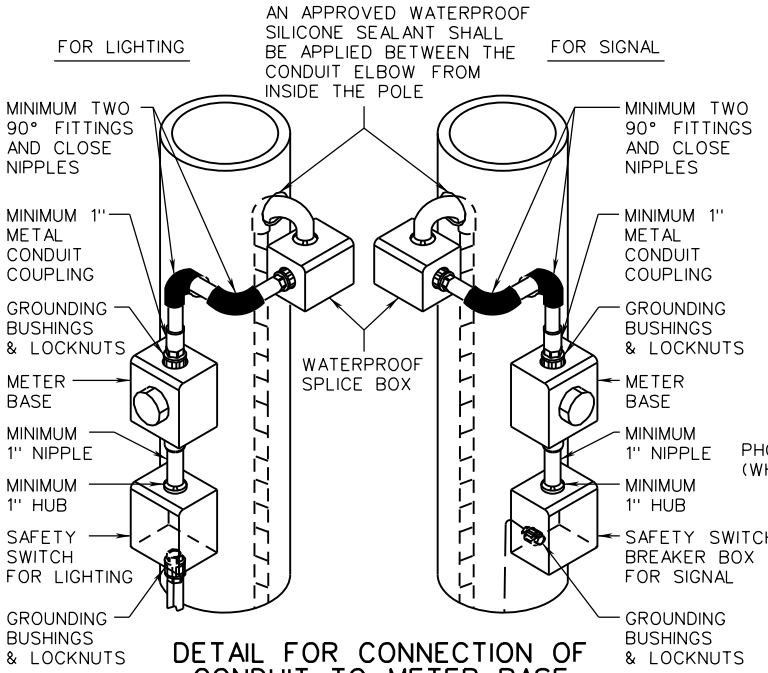

DETAIL FOR CONNECTION OF CONDUIT TO METER BASE FOR LIGHTING AND SIGNAL

NOTES:

1. LOCAL POWER UTILITY COMPANY WILL INSTALL SERVICE CABLE FROM THEIR POWER SOURCE TO THE JUNCTION BOX AND MAKE REQUIRED SPLICES TO THE CABLES PROVIDED.
2. POLE HEIGHT AND SIZE WILL BE AS SPECIFIED IN THE CONTRACT DOCUMENTS.
3. THIS STANDARD IS APPLICABLE FOR ALL ELECTRICAL SERVICES OTHER THAN 480Y/277.
4. FOR ROADWAY LIGHTING SYSTEMS, ONLY SAFETY SWITCH SHALL BE USED.
5. ALL ELECTRICAL CONNECTIONS AND SPLICES SHALL BE TESTED FOR ELECTRICAL CONTINUITY.
6. EACH ELECTRICAL SERVICE FEEDER SHALL BE SEPARATED AND TAGGED IN ACCESSIBLE LOCATIONS INSIDE THE POLE TO PERMANENTLY IDENTIFY LIGHTING AND SIGNAL POWER CABLES.
7. CONDUIT AND CONDUCTOR SIZE SHALL BE AS SPECIFIED IN THE CONTRACT DOCUMENTS.
8. RIGID METAL RISER CONDUIT AND SERVICE CABLE SIZE SHALL BE AS SPECIFIED IN THE CONTRACT DOCUMENTS, OR AS SPECIFIED BY THE LOCAL POWER COMPANY.
9. WHEN REQUIRED BY THE CONTRACT DOCUMENTS, AN ELECTRICAL SERVICE WORK PAD SHALL BE PLACED IN FRONT OF THE SAFETY SWITCH/BREAKER BOX. ELECTRICAL SERVICE WORK PAD SHALL BE A SEPARATE PAY ITEM.

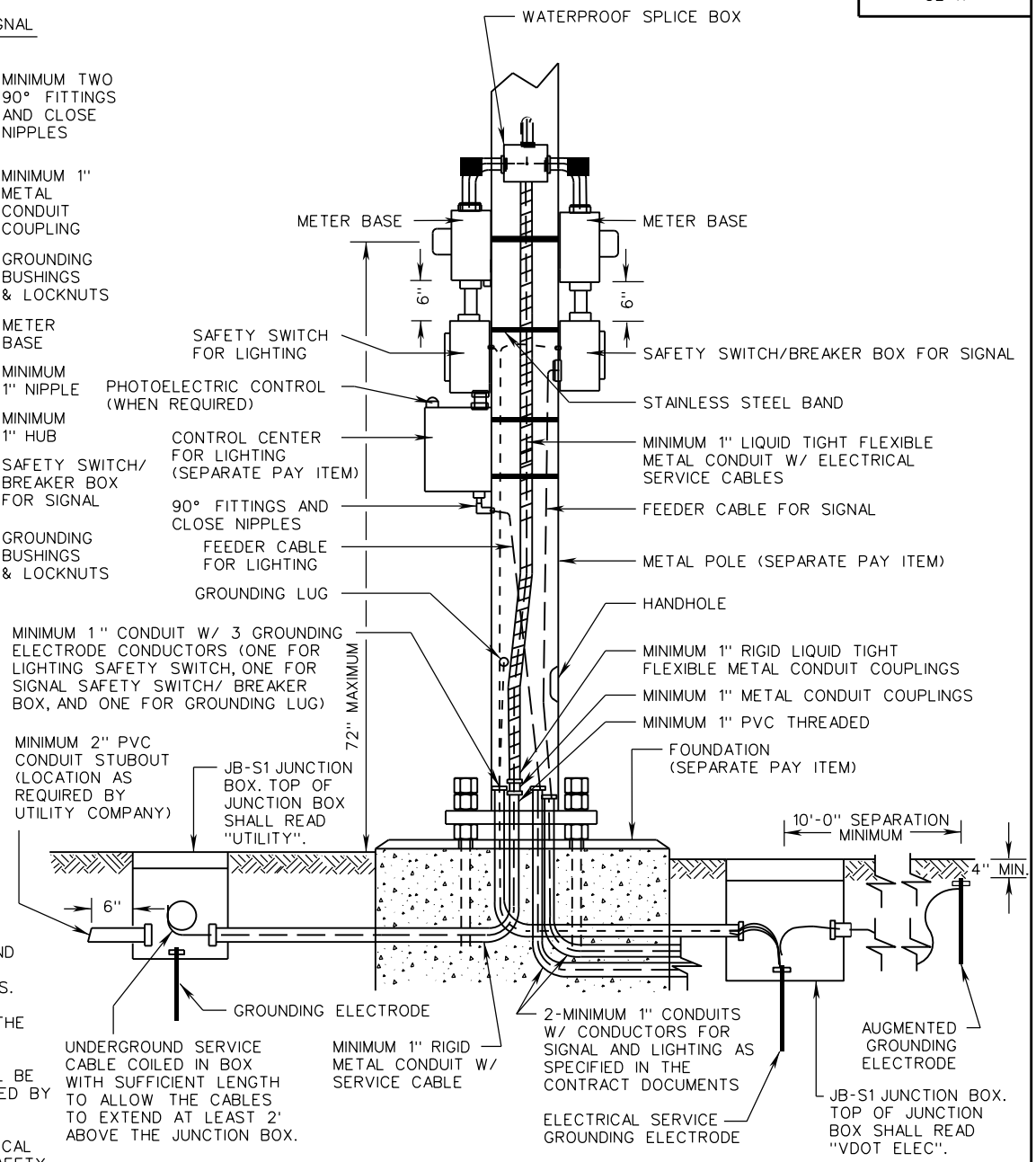

TYPE B (UNDERGROUND SERVICE) METAL POLE

SPECIFICATION REFERENCE	A COPY OF THE ORIGINAL SEALED AND SIGNED DRAWING IS ON FILE IN THE CENTRAL OFFICE.	VDOT ROAD AND BRIDGE STANDARDS	
700	ELECTRICAL SERVICE INSTALLATION DETAILS VIRGINIA DEPARTMENT OF TRANSPORTATION	REVISION DATE 02/16	SHEET 2 OF 2 1313.21

CCW-1

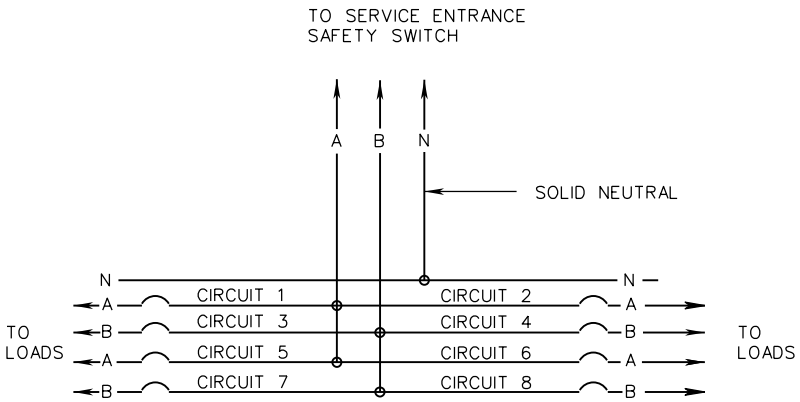

TYPE A
(SINGLE PHASE)

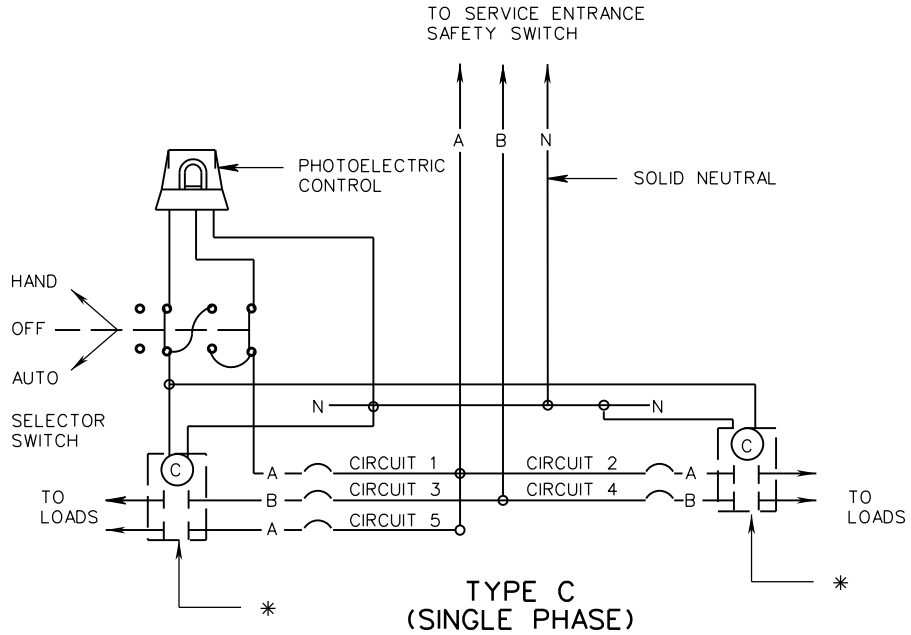

TYPE C
(SINGLE PHASE)

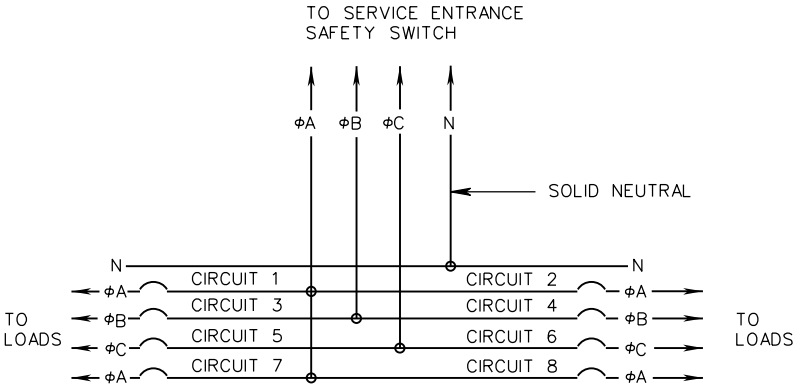

TYPE B
(THREE PHASE)

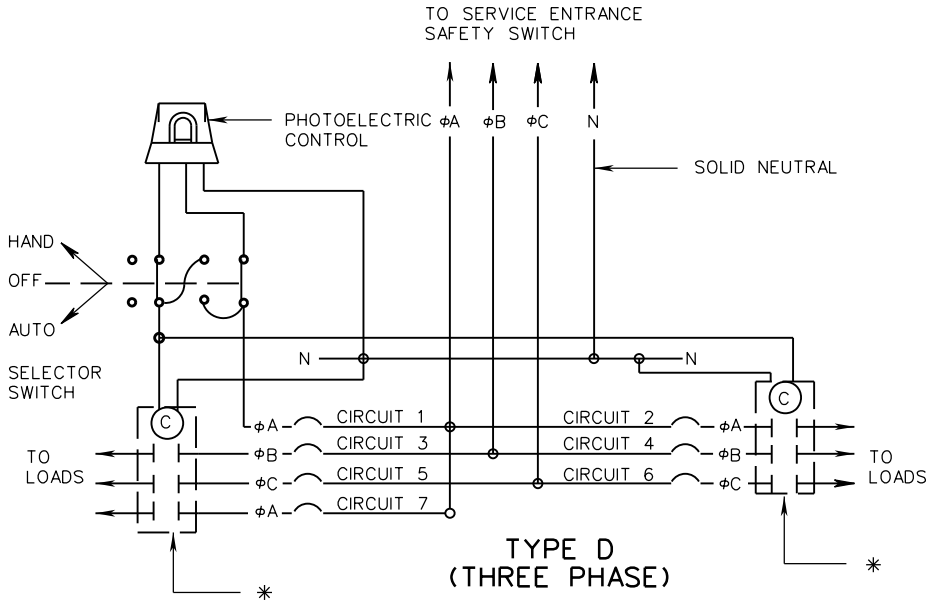

TYPE D
(THREE PHASE)

NOTES:

ALL CIRCUIT BREAKERS SHALL BE SINGLE POLE.

VOLTAGE AND AMPERAGE RATINGS OF CONTACTORS AND BREAKERS SHALL BE AS INDICATED ON THE PLANS.

NUMBER OF CIRCUITS SHOWN ARE TYPICAL. EXACT NUMBER REQUIRED SHALL BE AS INDICATED ON THE PLANS.

* CONTACTORS SHALL BE 2 POLES FOR SINGLE PHASE AND 3 POLES FOR THREE PHASE SERVICES. NUMBER OF CONTACTORS SHALL BE AS REQUIRED TO HANDLE THE NUMBER OF CIRCUITS ACTUALLY BEING UTILIZED.

VDOT ROAD AND BRIDGE STANDARDS	CONTROL CENTER WIRING DETAILS	SPECIFICATION REFERENCE
SHEET 1 OF 4	VIRGINIA DEPARTMENT OF TRANSPORTATION	700 705
REVISION DATE		
1314.10		

CCW-1

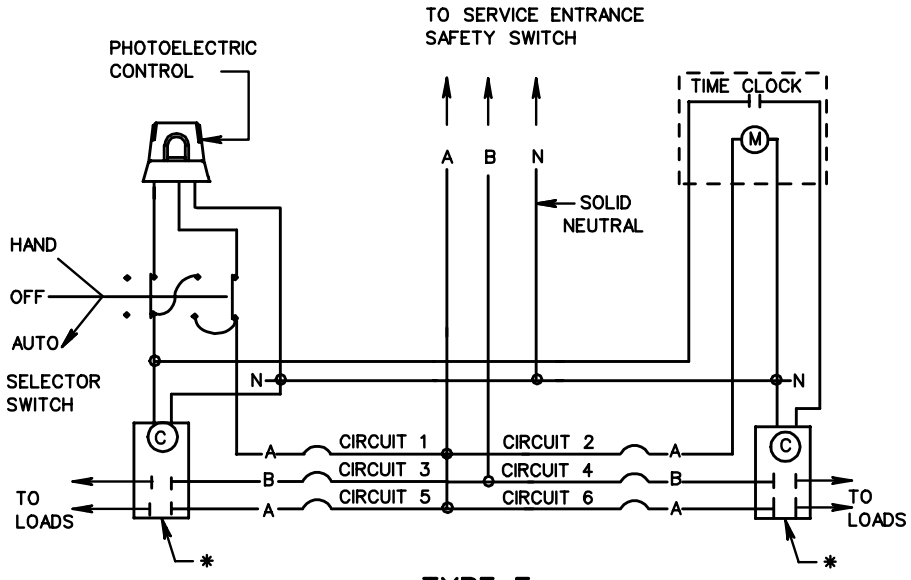

TYPE E
(SINGLE PHASE)

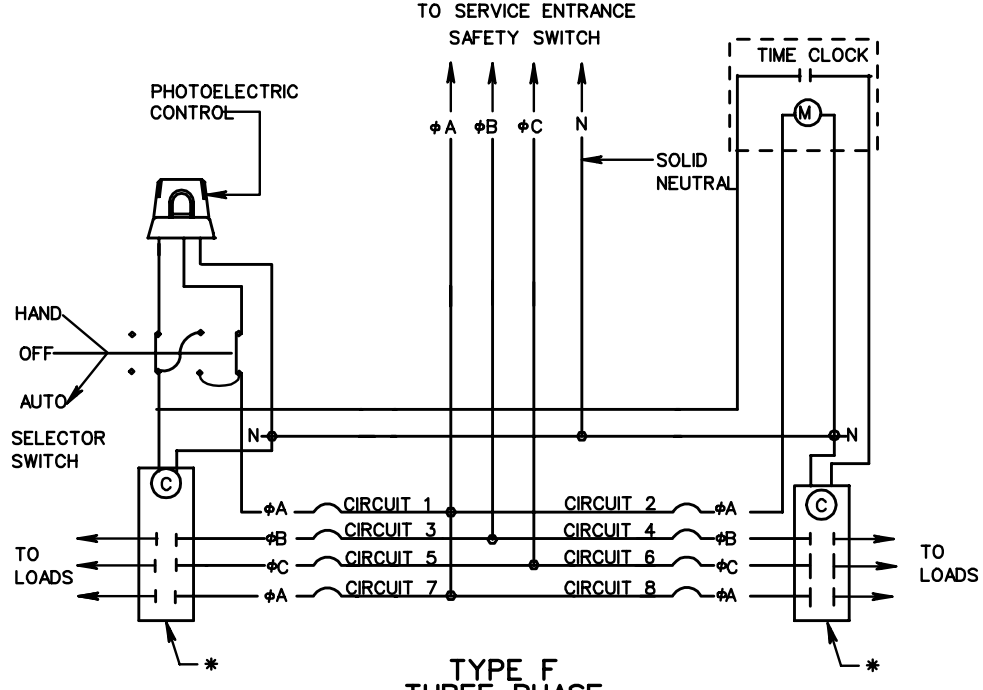

TYPE F
THREE PHASE

NOTES:

ALL CIRCUIT BREAKERS SHALL BE SINGLE POLE.

VOLTAGE AND AMPERAGE RATINGS OF CONTACTORS AND BREAKERS SHALL BE AS INDICATED ON THE PLANS.

NUMBER OF CIRCUITS SHOWN ARE TYPICAL. EXACT NUMBER REQUIRED SHALL BE AS INDICATED ON THE PLANS.

* CONTACTORS SHALL BE 2 POLES FOR SINGLE PHASE AND 3 POLES FOR THREE PHASE SERVICES. NUMBER OF CONTACTORS SHALL BE AS REQUIRED TO HANDLE THE NUMBER OF CIRCUITS ACTUALLY BEING UTILIZED.

SPECIFICATION REFERENCE	CONTROL CENTER WIRING DETAILS VIRGINIA DEPARTMENT OF TRANSPORTATION	VDOT ROAD AND BRIDGE STANDARDS
700 705		REVISION DATE / SHEET 2 OF 4 1314.11

CCW-1

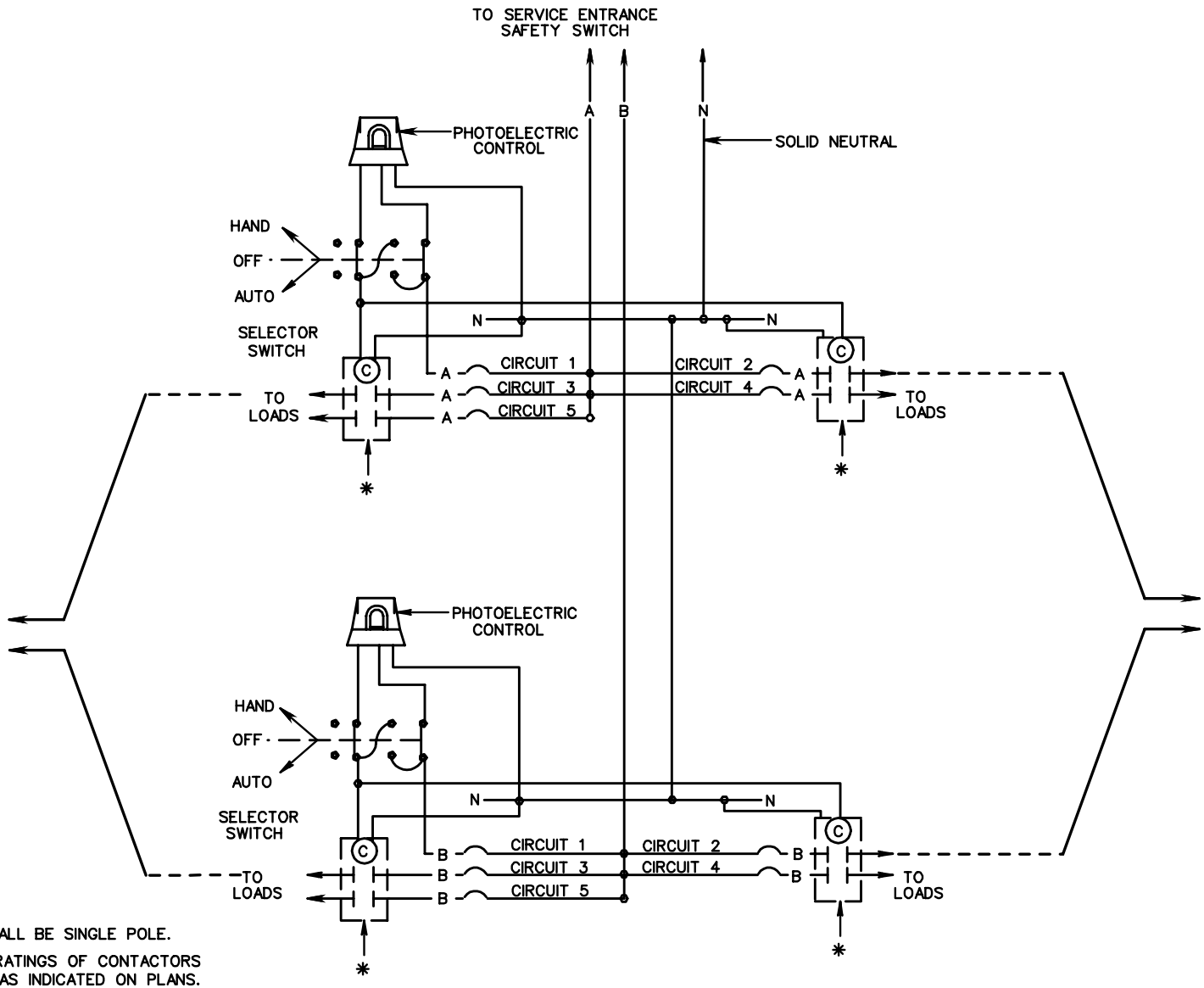

TYPE G
(SINGLE PHASE)

NOTES:

ALL CIRCUIT BREAKERS SHALL BE SINGLE POLE.

VOLTAGE AND AMPERAGE RATINGS OF CONTACTORS AND BREAKERS SHALL BE AS INDICATED ON PLANS.

NUMBER OF CIRCUITS SHOWN ARE TYPICAL. EXACT NUMBER REQUIRED SHALL BE AS INDICATED ON THE PLANS.

* CONTACTOR SHALL BE 2 POLES FOR SINGLE PHASE AND 3 POLES FOR THREE PHASE SERVICES.

NUMBER OF CONTACTORS SHALL BE AS REQUIRED TO HANDLE THE NUMBER OF CIRCUITS ACTUALLY BEING UTILIZED.

VDOT ROAD AND BRIDGE STANDARDS	CONTROL CENTER WIRING **DETAILS** VIRGINIA DEPARTMENT OF TRANSPORTATION	SPECIFICATION REFERENCE
SHEET 3 OF 4 / REVISION DATE		700 705
1314.12		

CCW-1

NOTES:

ALL CIRCUIT BREAKERS SHALL BE SINGLE POLE.

VOLTAGE AND AMPERAGE RATING OF CONTACTORS AND BREAKERS SHALL BE AS INDICATED ON THE PLANS.

NUMBER OF CIRCUITS SHOWN ARE TYPICAL. EXACT NUMBER REQUIRED SHALL BE AS INDICATED ON THE PLANS.

* CONTACTORS SHALL BE 2 POLES FOR SINGLE PHASE AND 3 POLES FOR THREE PHASE SERVICES. NUMBER OF CONTACTORS SHALL BE AS REQUIRED TO HANDLE THE NUMBER OF CIRCUITS ACTUALLY BEING UTILIZED.

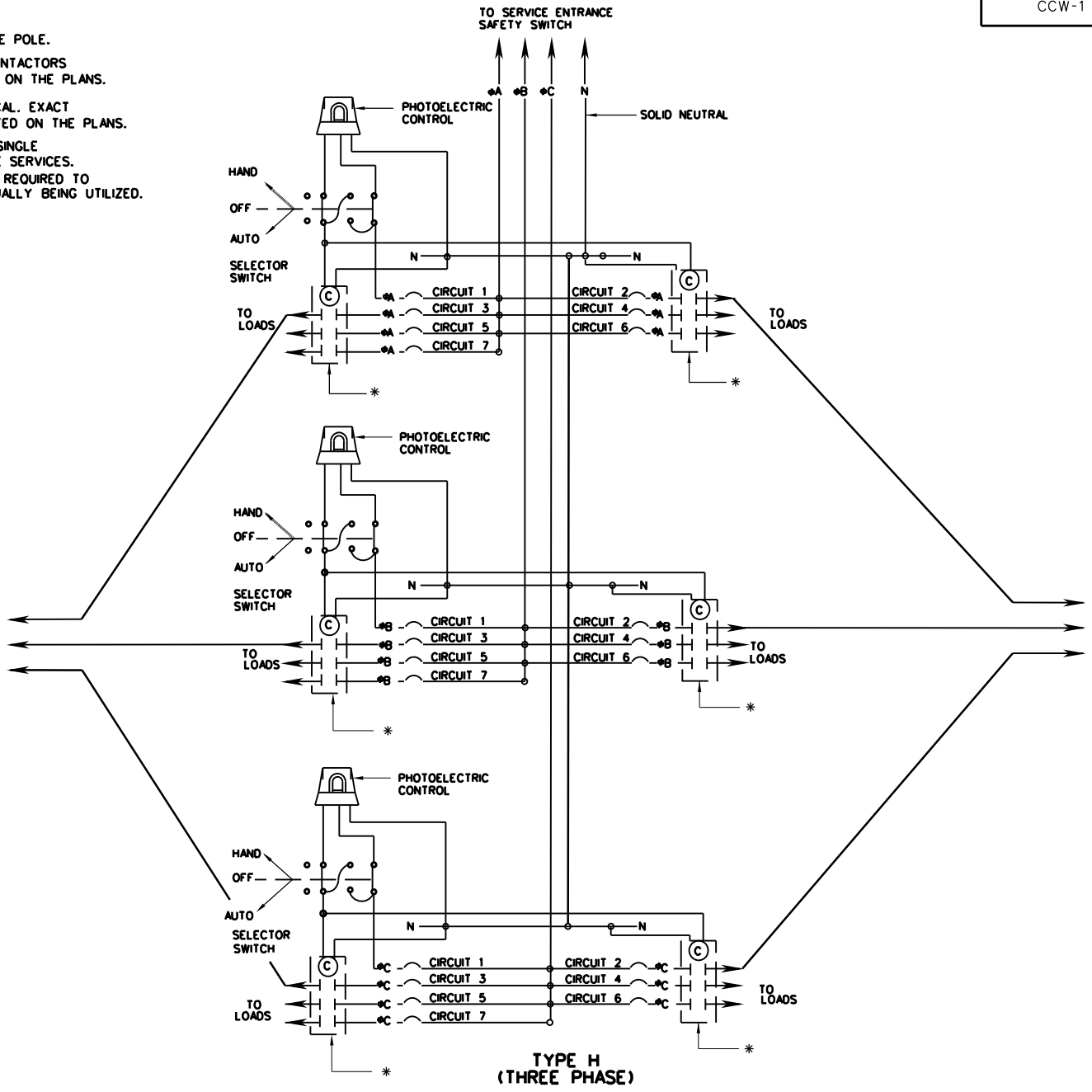

SPECIFICATION REFERENCE	CONTROL CENTER WIRING DETAILS	VDOT ROAD AND BRIDGE STANDARDS
700 705	VIRGINIA DEPARTMENT OF TRANSPORTATION	REVISION DATE / SHEET 4 OF 4 / 1314.13

TD-1A, B, C

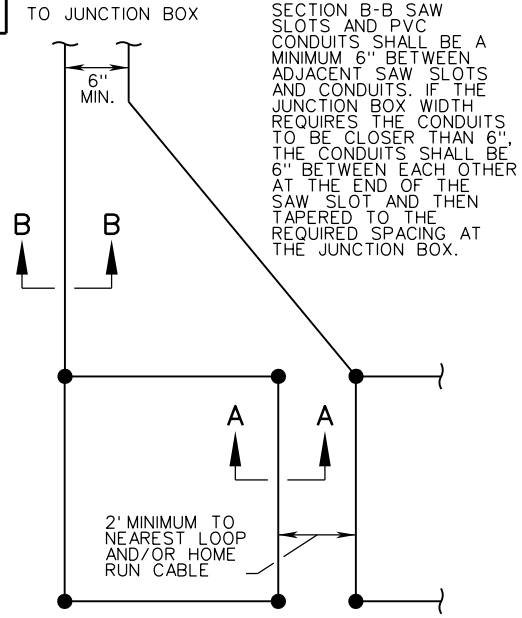

SECTION B-B SAW SLOTS AND PVC CONDUITS SHALL BE A MINIMUM 6" BETWEEN ADJACENT SAW SLOTS AND CONDUITS. IF THE JUNCTION BOX WIDTH REQUIRES THE CONDUITS TO BE CLOSER THAN 6", THE CONDUITS SHALL BE 6" BETWEEN EACH OTHER AT THE END OF THE SAW SLOT AND THEN TAPERED TO THE REQUIRED SPACING AT THE JUNCTION BOX.

TYPICAL LOOP WIRE PLAN

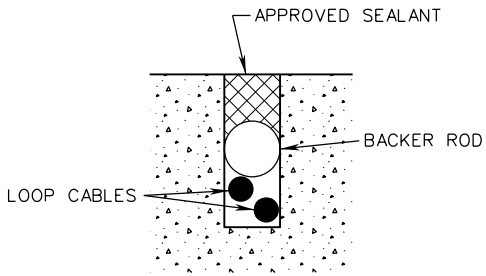

CROSS SECTION
TYPICAL SEALED SLOT

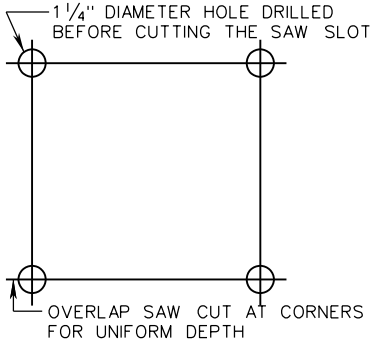

TYPICAL SAW CUT DIAGRAM

NOTES:

1. SAW SLOT SHALL BE 5/8" WHEN LOOP DETECTOR CABLE ENCLOSED IN TUBING IS INSTALLED.
2.
   - IN NEW ASPHALT CONCRETE ROADWAYS, SAW SLOTS SHALL BE CUT INTO THE BASE COURSE TO A DEPTH OF 3".
   - IN EXISTING ASPHALT CONCRETE ROADWAYS WHICH ARE TO BE RESURFACED AS PART OF THE PROJECT, SAW SLOTS SHALL BE CUT INTO THE PLANED SURFACE TO A DEPTH OF 3" PRIOR TO THE OVERLAY. LOOP DETECTORS MAY BE INSTALLED THROUGH FINISHED RIDING SURFACE AS SPECIFIED IN CONTRACT DOCUMENTS. SAW SLOTS IN FINAL RIDING SURFACE SHALL HAVE A 4" MINIMUM AND 4.5" MAXIMUM DEPTH.
   - IN EXISTING ASPHALT CONCRETE ROADWAYS WHICH ARE NOT TO BE RESURFACED AS PART OF THE PROJECT, SAW SLOTS SHALL BE CUT INTO THE EXISTING SURFACE TO A DEPTH OF 4".

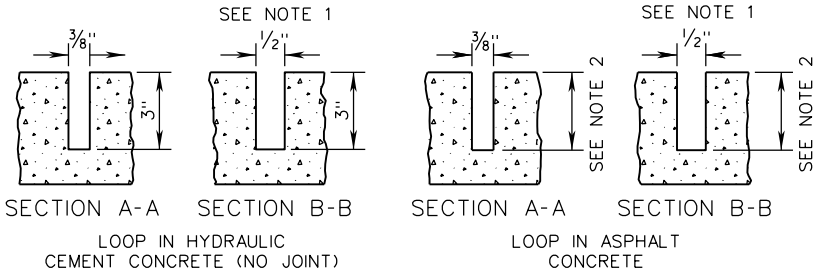

DEPTH OF SAW SLOT SHALL BE MEASURED FROM PAVEMENT SURFACE AT TIME OF INSTALLATION. NOT NECESSARILY FINISHED GRADE.

TYPICAL SAW SLOT DETAIL

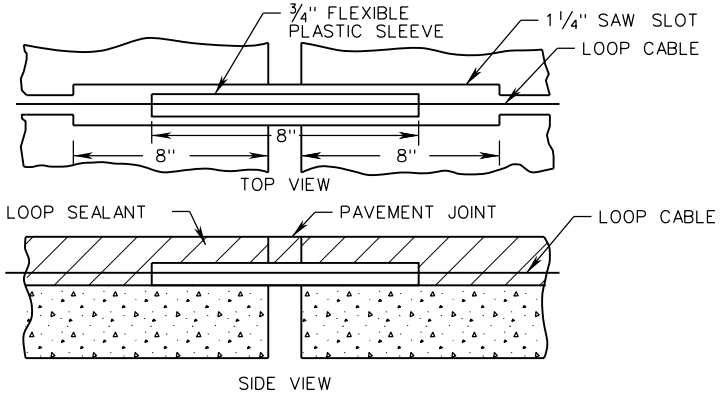

INSTALLATION OF LOOP CABLE ACROSS HYDRAULIC CEMENT CONCRETE PAVEMENT JOINTS

VDOT ROAD AND BRIDGE STANDARDS	A COPY OF THE ORIGINAL SEALED AND SIGNED DRAWING IS ON FILE IN THE CENTRAL OFFICE.		SPECIFICATION REFERENCE
SHEET 1 OF 3	LOOP DETECTOR		703
1315.10	INSTALLATION DETAIL	REVISION DATE 02/16	
	VIRGINIA DEPARTMENT OF TRANSPORTATION		

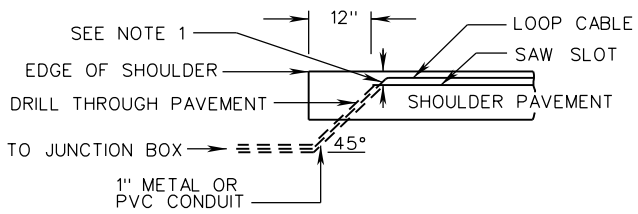

SHOULDER SECTION

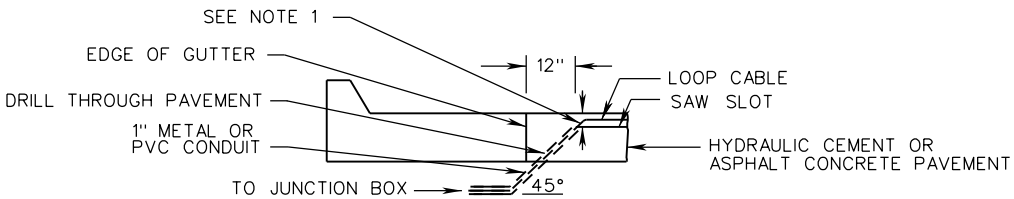

CURB AND GUTTER SECTION

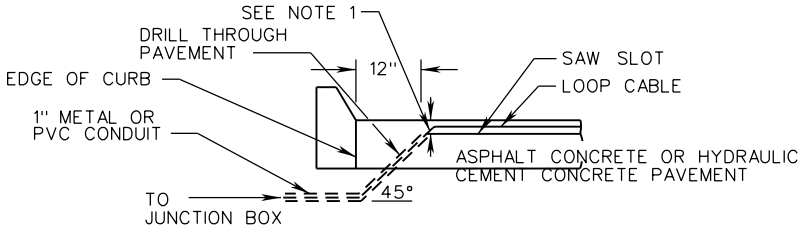

CURB SECTION (NO GUTTER)

NOTES:

1. THE TOP OF 1" CONDUITS SHALL BE INSTALLED 1" BELOW THE BOTTOM OF THE SAW SLOT.
2. PLASTIC BUSHINGS SHALL BE INSTALLED ON THE ENDS OF THE CONDUITS IN THE PAVEMENT. DUCT SEAL SHALL BE APPLIED TO THE OPEN END OF THE BUSHING.
3. SAW SLOTS SHALL INTERSECT WITH THE HOLES DRILLED FOR INSTALLATION OF THE CONDUITS AND LOOP CABLES.
4. DRILLED HOLES SHALL BE NO LARGER THAN REQUIRED FOR INSTALLATION OF THE CONDUIT AND PLASTIC BUSHING.
5. REMOVAL OF LARGE SECTIONS OF PAVEMENT TO PERFORM THIS WORK WILL NOT BE ALLOWED.
6. ONE CONDUIT SHALL BE PROVIDED FOR EACH SAW SLOT.
7. ALL DIMENSIONS NOT SHOWN SHALL BE AS SPECIFIED ON THE CONTRACT DOCUMENTS.

SPECIFICATION REFERENCE	A COPY OF THE ORIGINAL SEALED AND SIGNED DRAWING IS ON FILE IN THE CENTRAL OFFICE.	VDOT ROAD AND BRIDGE STANDARDS	
703	LOOP DETECTOR INSTALLATION DETAIL VIRGINIA DEPARTMENT OF TRANSPORTATION	REVISION DATE 02/16	SHEET 2 OF 3 1315.11

TD-1A, B, C

NOTES:

1. ALL DIMENSIONS NOT SHOWN SHALL BE AS SPECIFIED ON THE CONTRACT DOCUMENTS.
2. LOOP WIRE TWISTED TOGETHER WITH A MINIMUM OF THREE TURNS PER RUNNING FOOT.
3. BASED ON THE LENGTH OF LEAD-IN CABLE, ADDITIONAL WIRE TURNS PER LOOP MAY BE REQUIRED AS SPECIFIED BY THE CONTRACT DOCUMENTS.

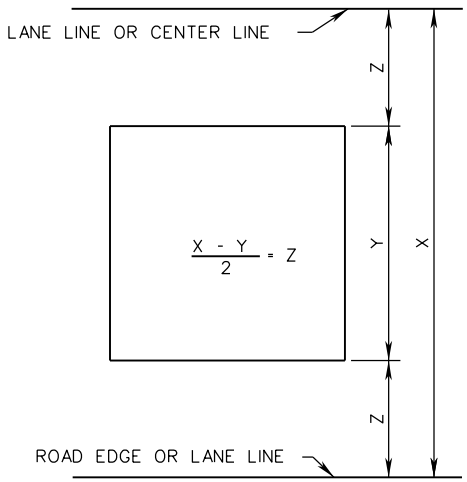

TYPICAL LANE COVERAGE DIAGRAM

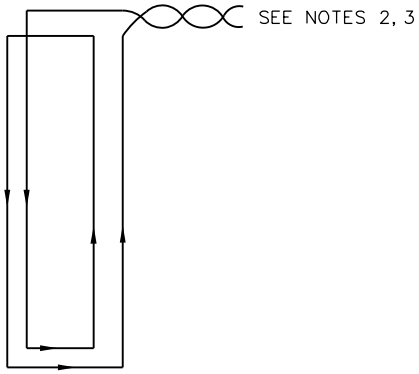

LOOP CABLE INSTALLATION

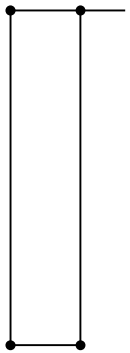

PLAN VIEW

TD-1A

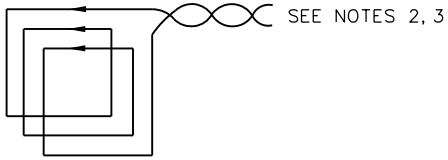

LOOP CABLE INSTALLATION

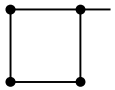

PLAN VIEW

TD-1B

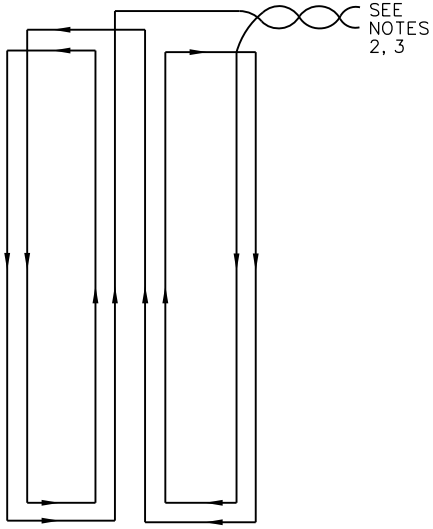

LOOP CABLE INSTALLATION

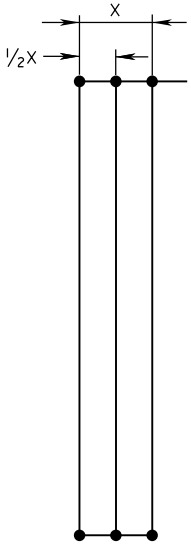

PLAN VIEW

TD-1C

VDOT ROAD AND BRIDGE STANDARDS	A COPY OF THE ORIGINAL SEALED AND SIGNED DRAWING IS ON FILE IN THE CENTRAL OFFICE.	SPECIFICATION REFERENCE
SHEET 3 OF 3 / 1315.12	LOOP DETECTOR INSTALLATION DETAIL VIRGINIA DEPARTMENT OF TRANSPORTATION	703
REVISION DATE NEW 02/16		

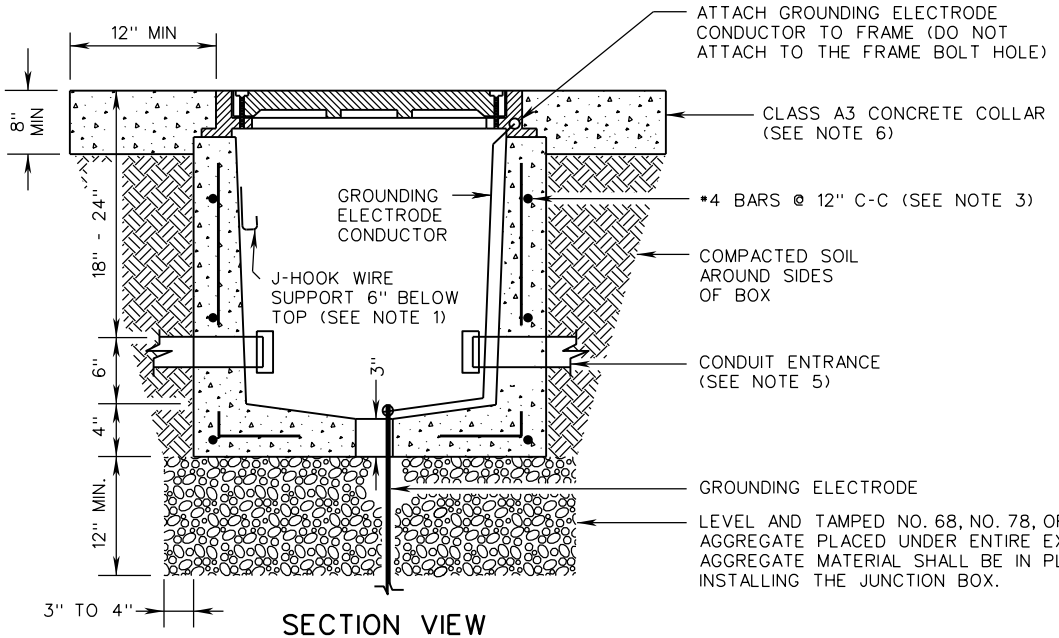

SECTION VIEW
(JB-R1 AND R2)

STANDARD	DIMENSIONS	
	E	F
JB-R1	20"	20"
JB-R2	27"	27"

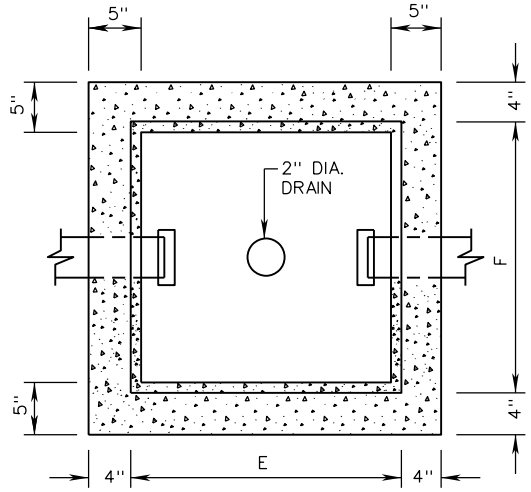

TOP VIEW
(FRAME AND COVER REMOVED)
(JB-R1 AND R2)

NOTES:

1. J-HOOK WIRE SUPPORTS SHALL BE SECURELY ATTACHED TO THE JUNCTION BOX WITH A BOLT AND NUT WITH A NEOPRENE WASHER OR AN EXPANSION FITTING. ONE J-HOOK PER WALL SHALL BE INSTALLED FOR JB-R1 AND R2 BOXES. TWO J-HOOKS PER WALL (EQUALLY SPACED) SHALL BE INSTALLED FOR JB-R3 BOXES.
2. CONDUIT ENTRANCES SHALL BE LOCATED AS SHOWN IN THE CONTRACT DOCUMENTS. CONDUITS SHALL EXTEND 2" MIN. TO 3" MAX. INTO THE INSIDE WALL OF THE JUNCTION BOX.
3. ALL REINFORCING STEEL SHALL BE IN ACCORDANCE WITH SECTION 223 OF THE SPECIFICATIONS, SHALL HAVE A MINIMUM 1 1/2" CONCRETE COVER. ANY REINFORCING STEEL IN CONFLICT WITH CONDUIT SHALL BE CUT A MINIMUM OF 1 1/2" FROM CONDUIT.
4. THE JUNCTION BOX MAY BE PRECAST OR CAST IN PLACE CLASS A3 CONCRETE.
5. A MINIMUM 2" DIAMETER CONDUIT ENTRANCE IS REQUIRED UNLESS OTHERWISE SPECIFIED IN THE CONTRACT DOCUMENTS.
6. A CONCRETE COLLAR IS REQUIRED ONLY WHEN JUNCTION BOX IS INSTALLED IN EARTH AREAS.
7. HIGH STRENGTH GROUT CONFORMING TO THE ROAD & BRIDGE SPECIFICATIONS SHALL BE USED TO SECURE THE FRAME TO THE JUNCTION BOX.
8. ALL JUNCTION BOXES SHALL BE INSTALLED WITH A GROUNDING ELECTRODE.
9. VOIDS RESULTING FROM ENTRANCE OF CONDUITS INTO JUNCTION BOX SHALL BE COMPLETELY FILLED WITH HYDRAULIC CEMENT GROUT CONFORMING TO THE ROAD & BRIDGE SPECIFICATIONS.
10. WHEN INSTALLED, CONDUIT STUB-OUTS SHALL EXTEND A MINIMUM OF 6" PAST THE OUTSIDE OF THE JUNCTION BOX AND SHALL BE CAPPED OR PLUGGED.

SPECIFICATION REFERENCE	A COPY OF THE ORIGINAL SEALED AND SIGNED DRAWING IS ON FILE IN THE CENTRAL OFFICE.	VDOT ROAD AND BRIDGE STANDARDS	
700	JUNCTION BOX FOR TRAFFIC USE VIRGINIA DEPARTMENT OF TRANSPORTATION	REVISION DATE 08/17	SHEET 1 OF 2 1317.10

JB-R1, R2

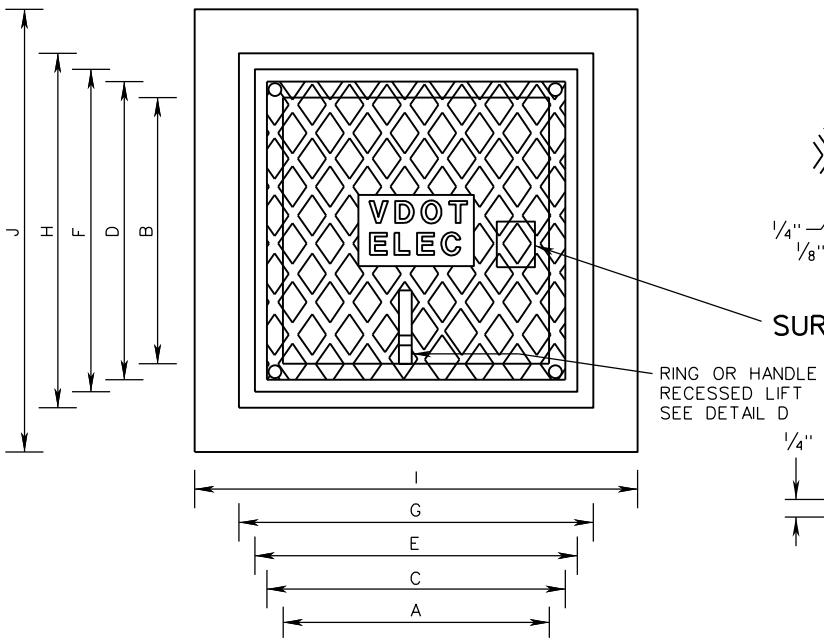

TOP VIEW

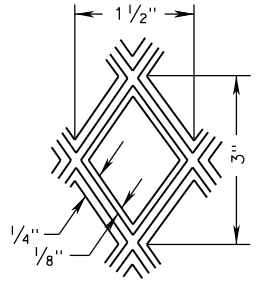

DETAIL A
SURFACE PATTERN

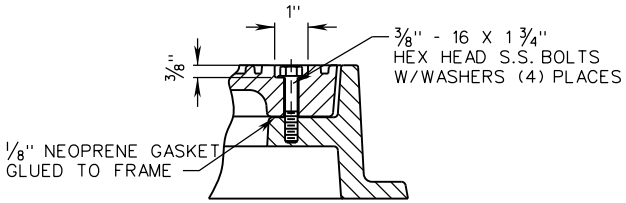

DETAIL C
BOLT DETAIL

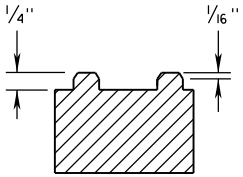

DETAIL B
PATTERN ELEVATION

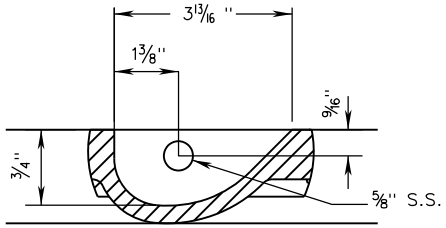

DETAIL D
PICKBAR DETAIL

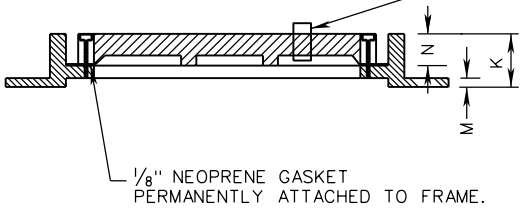

SIDE VIEW

STANDARD	DIMENSIONS												
	A	B	C	D	E	F	G	H	I	J	K	M	N
JB-R1	18"	18"	19"	19"	20"	20"	21"	21"	24"	24"	4"	5/8"	1"
JB-R2	24"	24"	26"	26"	27"	27"	28"	28"	33"	33"	4"	5/8"	1"

NOTES:

1. EACH COVER SECTION SHALL HAVE A NON-SKID SURFACE WITH LETTERS CAST IN THE DEPRESSION ON TOP. THE LETTERS "VDOT ELEC", "VDOT TRAFF", "VDOT COMM", "VDOT FIBER", OR "UTILITY" AS APPLICABLE ARE TO BE ONE (1) INCH WIDE AND RAISED 1/4" HIGH. COVERS USED FOR JUNCTION BOXES INSTALLED THAT WILL BE MAINTAINED BY LOCALITIES SHALL OMIT THE WORD "VDOT".

2. FOUR RECESSED 3/8" S.S. HEX HEAD BOLTS ARE REQUIRED FOR EACH COVER.

2. GRAY IRON CASTINGS SHALL BE AS PER SECTION 224 OF THE SPECIFICATIONS.

VDOT
ROAD AND BRIDGE STANDARDS

SHEET 2 OF 2
1317.11

REVISION DATE
08/17

A COPY OF THE ORIGINAL SEALED AND SIGNED DRAWING IS ON FILE IN THE CENTRAL OFFICE.

JUNCTION BOX
FOR TRAFFIC USE

VIRGINIA DEPARTMENT OF TRANSPORTATION

SPECIFICATION REFERENCE
700

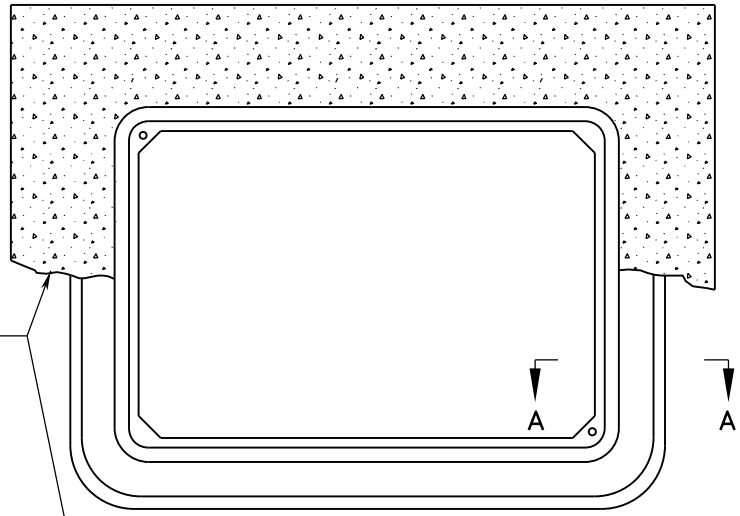

TOP VIEW (COVER REMOVED)
(JB-S1, S2, AND S3)

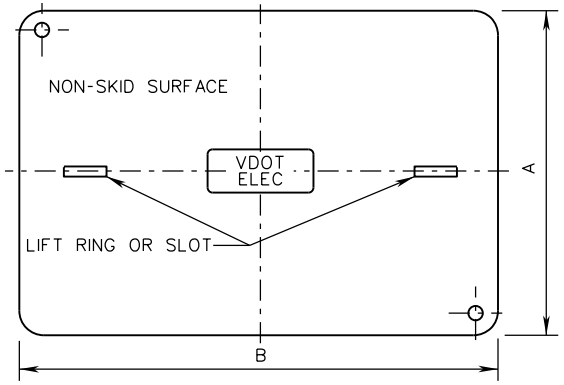

COVER DETAIL (JB-S1, S2, AND S3)

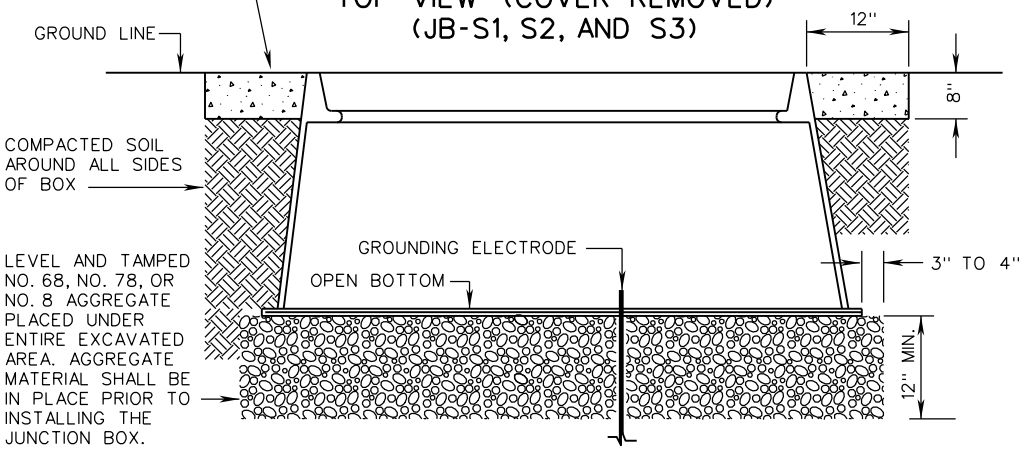

SECTION VIEW (JB-S1, S2, AND S3)

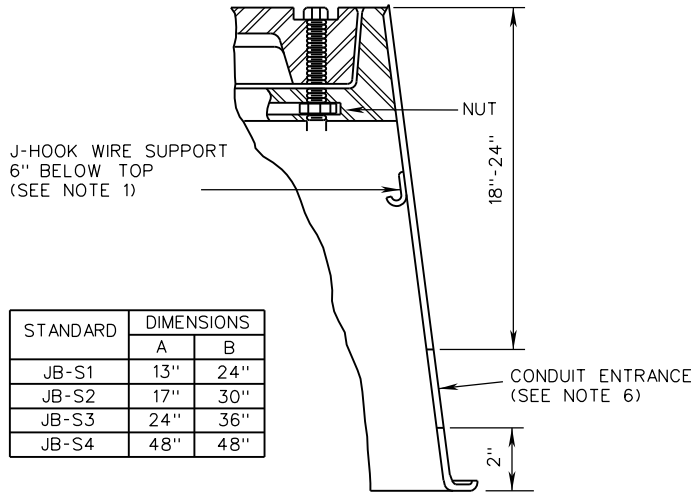

SECTION A-A (JB-S1, S2, AND S3)

STANDARD	DIMENSIONS	
	A	B
JB-S1	13"	24"
JB-S2	17"	30"
JB-S3	24"	36"
JB-S4	48"	48"

NOTES:

1. JUNCTION BOXES SHALL HAVE A STRAIGHT OR FLARED INSIDE WALL DESIGN. MATERIALS SHALL CONFORM TO SECTION 238 OF THE ROAD & BRIDGE SPECIFICATIONS.
2. CONDUIT ENTRANCES SHALL BE LOCATED AS SHOWN IN THE CONTRACT DOCUMENTS. CONDUITS SHALL EXTEND 2" MIN. TO 3" MAX. INTO THE INSIDE WALL OF THE JUNCTION BOX.
3. EACH COVER SECTION SHALL HAVE A NON-SKID SURFACE WITH LETTERS CAST IN THE DEPRESSION ON TOP OR OTHER PRE-APPROVED METHODS THAT DO NOT REQUIRE THE USE OF ADHESIVES. THE LETTERS "VDOT ELEC", "VDOT TRAF", "VDOT COMM", "VDOT FIBER", OR "UTILITY" AS APPLICABLE ARE TO BE 1" WIDE. COVERS USED FOR JUNCTION BOXES INSTALLED THAT WILL BE MAINTAINED BY LOCALITIES SHALL OMIT THE WORD "VDOT".
4. ALL JUNCTION BOXES SHALL BE INSTALLED WITH A GROUNDING ELECTRODE.
5. TWO RECESSED ⅜" S.S. HEX HEAD BOLTS ARE REQUIRED FOR EACH JB-S1, S2, AND S3 COVER. FOUR RECESSED ⅜" S.S. HEX HEAD BOLTS ARE REQUIRED FOR EACH JB-S4 COVER.
6. A MINIMUM 2" DIAMETER CONDUIT ENTRANCE IS REQUIRED, UNLESS OTHERWISE SPECIFIED IN THE CONTRACT DOCUMENTS.
7. J-HOOK WIRE SUPPORTS SHALL BE SECURELY ATTACHED TO THE JUNCTION BOX WITH A BOLT AND NUT WITH A NEOPRENE WASHER OR AN EXPANSION FITTING. ONE J-HOOK PER WALL SHALL BE INSTALLED FOR JB-S1, S2, AND S3 BOXES. TWO J-HOOKS PER WALL SHALL BE INSTALLED FOR JB-S4 BOXES.
8. VOIDS RESULTING FROM ENTRANCE OF CONDUITS INTO JUNCTION BOXES SHALL BE COMPLETELY FILLED WITH AN APPROVED MATERIAL.
9. CONDUIT STUB-OUTS, WHEN INSTALLED, SHALL EXTEND A MINIMUM OF 6" PAST THE OUTSIDE OF THE JUNCTION BOX.

SPECIFICATION REFERENCE	A COPY OF THE ORIGINAL SEALED AND SIGNED DRAWING IS ON FILE IN THE CENTRAL OFFICE.	VDOT ROAD AND BRIDGE STANDARDS
700 238	JUNCTION BOX FOR NON-DELIBERATE TRAFFIC USE VIRGINIA DEPARTMENT OF TRANSPORTATION	REVISION DATE 08/17 SHEET 1 OF 2 1317.20

JB-S1, S2, S3, S4

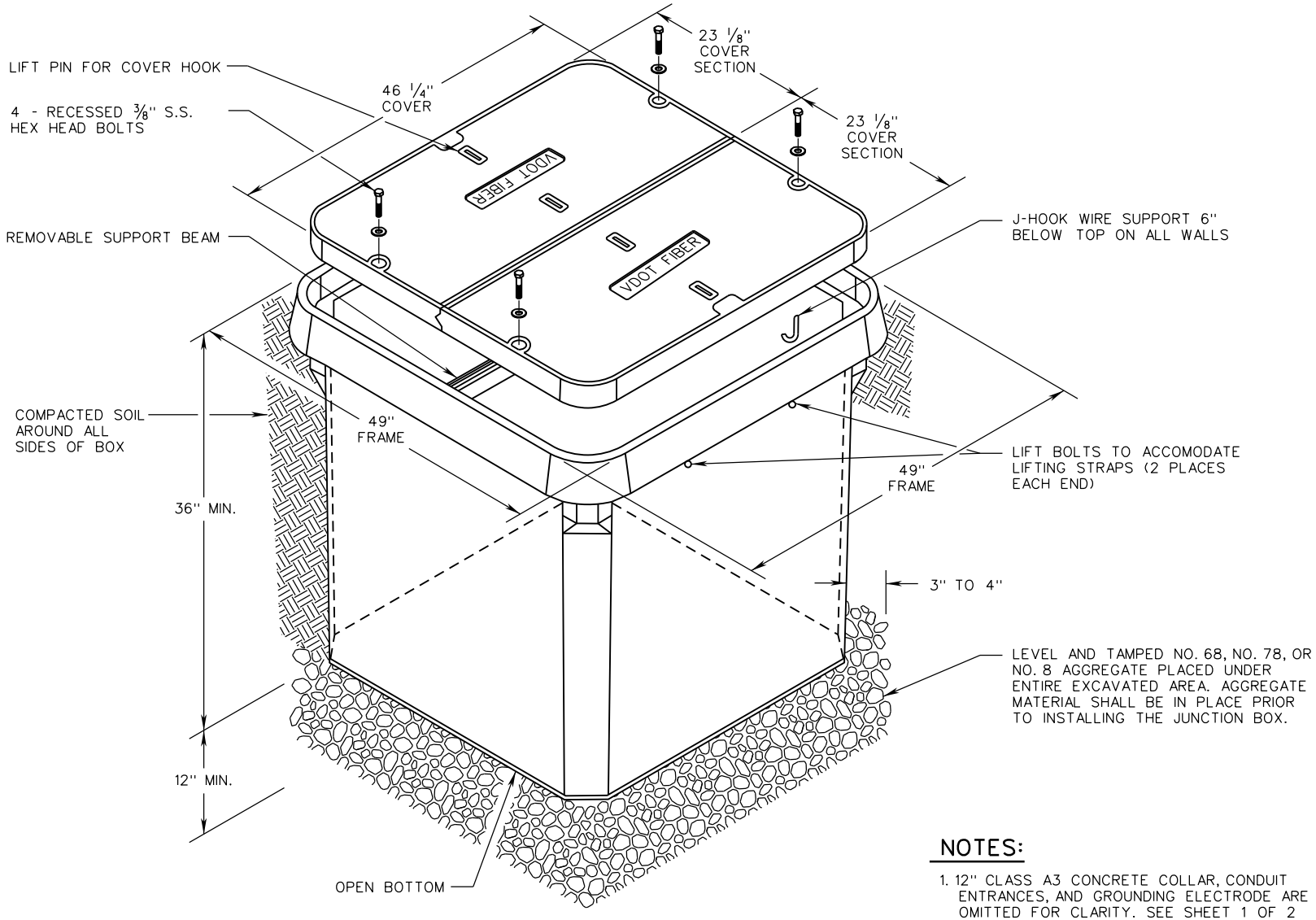

ISOMETRIC VIEW (JB-S4)

NOTES:

1. 12" CLASS A3 CONCRETE COLLAR, CONDUIT ENTRANCES, AND GROUNDING ELECTRODE ARE OMITTED FOR CLARITY. SEE SHEET 1 OF 2 FOR DETAILS.
2. SEE SHEET 1 OF 2 FOR NOTES.

VDOT ROAD AND BRIDGE STANDARDS	A COPY OF THE ORIGINAL SEALED AND SIGNED DRAWING IS ON FILE IN THE CENTRAL OFFICE.	SPECIFICATION REFERENCE
SHEET 2 OF 2	JUNCTION BOX	700
1317.21	FOR NON-DELIBERATE TRAFFIC USE	238
REVISION DATE NEW 08/17	VIRGINIA DEPARTMENT OF TRANSPORTATION	

STANDARD

THIS PAGE INTENTIONALLY LEFT BLANK

SPECIFICATION REFERENCE	TITLE VIRGINIA DEPARTMENT OF TRANSPORTATION	VDOT ROAD AND BRIDGE STANDARDS REVISION DATE	SHEET 1 OF 1 ____._

ECI-1

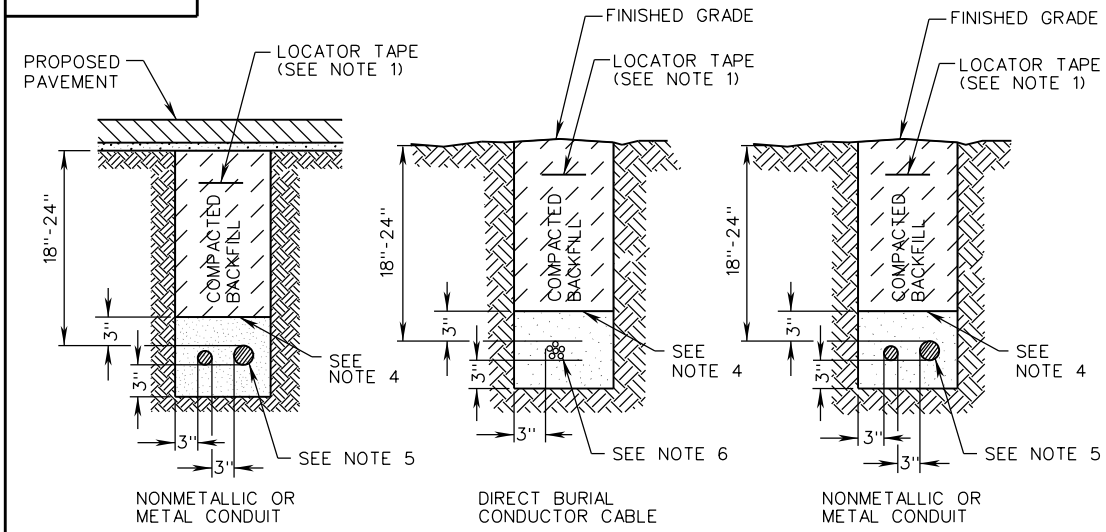

NON - PAVEMENT AND PROPOSED PAVEMENT AREA INSTALLATION

ECI-2

PAVEMENT SHALL BE RESTORED IN ACCORDANCE WITH THE CONTRACT DOCUMENTS.

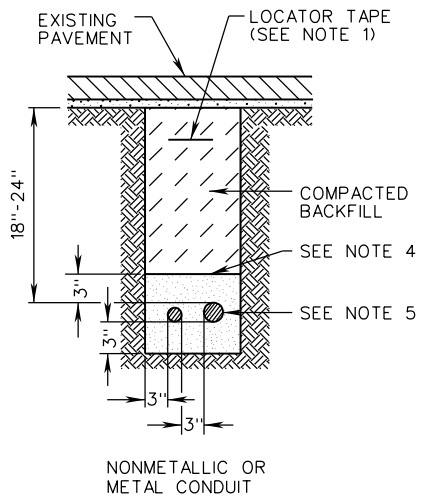

EXISTING PAVEMENT AREA INSTALLATION

NOTES:

1. CONTRACTOR SHALL INSTALL A 2" MINIMUM TO 6" MAXIMUM WIDE RED DETECTABLE LOCATOR TAPE BETWEEN 6" AND 8" BELOW FINISHED GRADE, AND DIRECTLY ABOVE BURIED CONDUIT OR DIRECT BURIAL CONDUCTOR CABLE.
2. CONDUIT INSTALLED UNDER EXISTING OR PROPOSED ROADWAYS OR SIDEWALK FOR DIRECT BURIED CABLES SHALL EXTEND 24" BEYOND THE PAVED SURFACE AND/OR SIDEWALK.
3. WHERE CONDUIT FOR POWER AND CONDUIT FOR COMMUNICATION ARE TO BE INSTALLED IN CLOSE PROXIMITY TO EACH OTHER, CONDUITS SHALL BE PLACED PARALLEL IN A COMMON TRENCH WITH NO LESS THAN 6" OF SEPARATION BETWEEN CONDUIT SYSTEMS.
4. BACKFILL MATERIAL BELOW THIS LEVEL SHALL BE SANDY FILL (FREE OF ANY STONES, CINDERS, WOOD, ROOTS, DEBRIS, ETC.).
5. ONE OR MORE CONDUITS AS REQUIRED.
6. ONE OR MORE CONDUCTOR CABLES AS REQUIRED.
7. OFFSETTING OF CONDUIT MAY BE USED FOR TYING INTO EXISTING CONDUIT SYSTEMS OR BYPASSING OBSTRUCTIONS AS DIRECTED BY THE ENGINEER.
8. WHEN OFFSETTING CONDUIT TO BYPASS AN OBSTRUCTION, THE CONDUIT SHALL MAINTAIN A MINIMUM CLEARANCE OF 12" FROM THE CLOSEST POINT OF THE OBSTRUCTION.

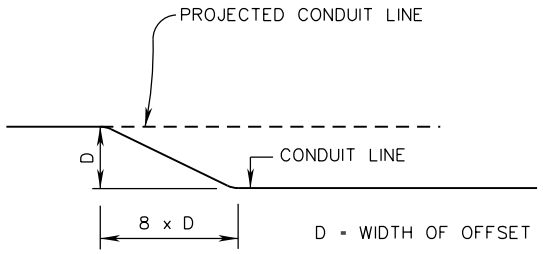

METHOD OF OFFSETTING CONDUIT

VDOT
ROAD AND BRIDGE STANDARDS

SHEET 1 OF 1
1318.10

REVISION DATE
09/18

A COPY OF THE ORIGINAL SEALED AND SIGNED DRAWING IS ON FILE IN THE CENTRAL OFFICE.

ELECTRICAL CONDUIT AND CONDUCTOR CABLE

UNDERGROUND INSTALLATION

VIRGINIA DEPARTMENT OF TRANSPORTATION

SPECIFICATION REFERENCE
700
302

PCS-1

PROCEDURE FOR USING TABLES FOR STANDARDS WSP-1 AND STP-1:

A_1 = AREA OF SIGN PANEL 1

A_2 = AREA OF SIGN PANEL 2

A_3 = AREA OF SIGN PANEL 3

H_1 = CENTROIDAL DISTANCE FROM SIGN PANEL 1 TO GROUND LINE THROUGH REFERENCE POINT

H_2 = CENTROIDAL DISTANCE FROM SIGN PANEL 2 TO GROUND LINE THROUGH REFERENCE POINT

H_3 = CENTROIDAL DISTANCE FROM SIGN PANEL 3 TO GROUND LINE THROUGH REFERENCE POINT

1. SELECT MINIMUM MOUNTING HEIGHT TO BE USED (5'-0" OR 7'-0").

2. DECIDE ON NUMBER OF POSTS TO BE USED (SINGLE, TWO OR THREE).

3. CALCULATE THE AREA OF EACH SIGN PANEL (A_1, A_2, A_3, . . . A_n).

4. CALCULATE THE CENTROIDAL DISTANCE FOR EACH SIGN PANEL (H_1, H_2, H_3, ..H_n).

   THE CENTROIDAL DISTANCE IS THE VERTICAL DISTANCE FROM THE REFERENCE POINT ON THE GROUND LINE TO THE CENTER OF EACH SIGN PANEL.

5. CALCULATE THE CENTROIDAL DISTANCE (H) FOR THE ENTIRE SIGN PANEL GROUP:

$$H = \frac{(A_1 \times H_1 + A_2 \times H_2 + A_3 \times H_3 + \ldots A_n \times H_h)}{(A_1 + A_2 + A_3 + \ldots A_n)}$$

6. ENTER THE APPROPRIATE TABLE BASED ON:

   THE MINIMUM MOUNTING HEIGHT SELECTED IN STEP 1

   PICK THE POST SIZE(S) TO BE REVIEWED, AND ENTERING WITH THE "H" VALUE CALCULATED IN STEP 5, READ THE MAXIMUM AREA UNDER THE SIZE OF POSTS SELECTED IN STEP 3. IF THE TOTAL AREA OF SIGN PANEL(S) TO BE SUPPORTED IS LESS THAN OR EQUAL TO THAT SHOWN IN THE TABLE(S), THE SIZE OF THE POST(S) WILL BE SATISFACTORY.

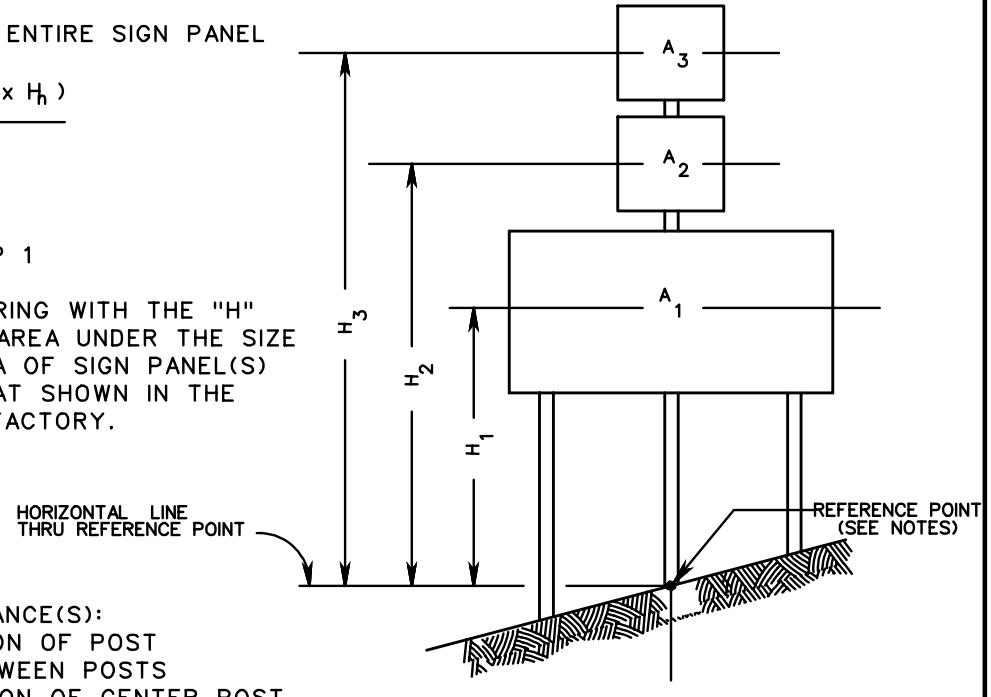

NOTES:

REFERENCE POINT FOR CALCULATING CENTROIDAL DISTANCE(S):
- FOR SINGLE POST: ON GROUND LINE AT INTERSECTION OF POST
- FOR TWO-POSTS: ON GROUND LINE, HALF-WAY BETWEEN POSTS
- FOR THREE POSTS: ON GROUND LINE AT INTERSECTION OF CENTER POST

SPECIFICATION REFERENCE	PROCEDURES FOR CALCULATING CENTROID AND TOTAL SQUARE FOOTAGE OF SIGN PANEL	VDOT ROAD AND BRIDGE STANDARDS
701	VIRGINIA DEPARTMENT OF TRANSPORTATION	REVISION DATE / SHEET 1 OF 1 / 1319.10

WSP-1

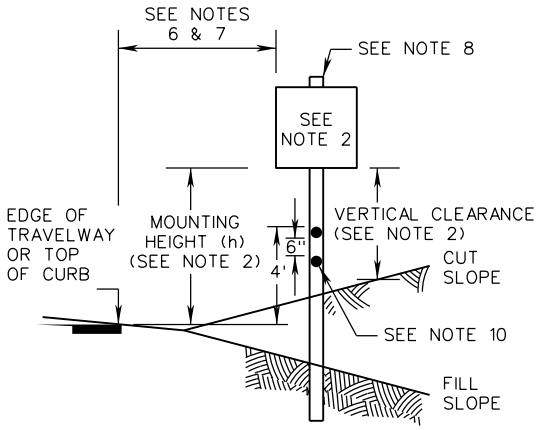

SINGLE POST INSTALLATIONS

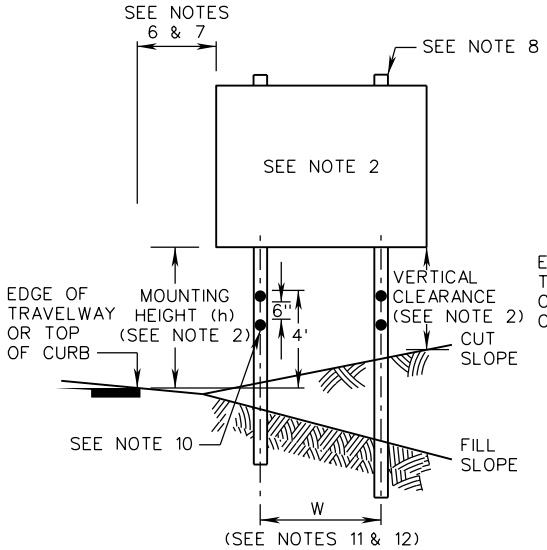

TWO POST INSTALLATIONS

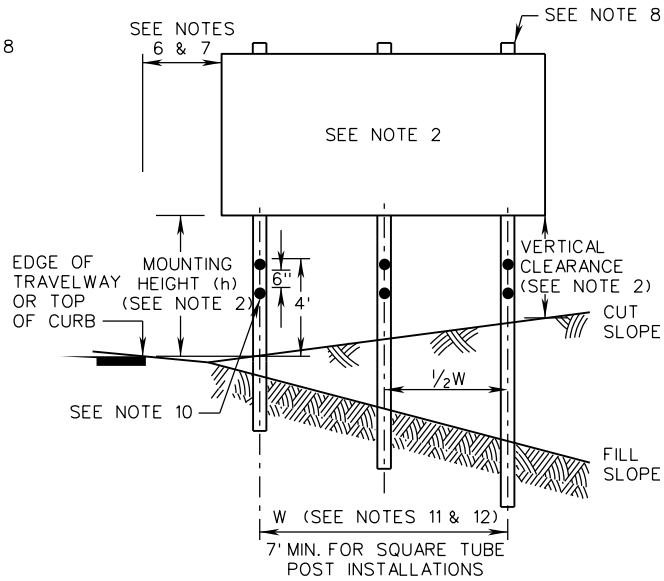

THREE POST INSTALLATIONS

GENERAL NOTES:

1. WSP STANDARDS SHALL ONLY BE USED FOR TEMPORARY SIGN INSTALLATIONS THAT WILL BE IN PLACE FOR A MAXIMUM OF 36 MONTHS.

2. FOR ALL SIGNS EXCEPT STREET NAME SIGNS:
   A. MINIMUM MOUNTING HEIGHT (h) SHALL BE 7 FEET FOR TEMPORARY SIGNS AND 6 FEET FOR SECONDARY SIGNS (SEE NOTE 4).
   B. MAXIMUM MOUNTING HEIGHT (h) FOR THE BOTTOM-MOST SIGN(S) SHALL BE 8 FEET, EXCEPT WHEN NECESSARY TO ACHIEVE MINIMUM VERTICAL CLEARANCE BENEATH SIGN AS PER NOTE 2C.
   C. MINIMUM VERTICAL CLEARANCE (DISTANCE BETWEEN BOTTOM OF SIGN AND FINISHED GRADE BENEATH THE SIGN) SHALL BE 7 FEET FOR ANY PORTION OF THE SIGN WITHIN THE CLEAR ZONE. THIS MINIMUM VERTICAL CLEARANCE MAY BE REDUCED TO 5 FEET FOR EITHER OF THE FOLLOWING CONDITIONS:
      - WHEN SIGNS OR PORTIONS OF SIGNS ARE LOCATED MORE THAN 10 FEET UP A CUT SLOPE GREATER THAN 3:1, OR
      - WHEN THE SIGN IS LOCATED AT LEAST THE MINIMUM DISTANCE BEHIND CURB, BARRIER, OR GUARDRAIL AS PER NOTES 6 AND 7.

3. MOUNTING HEIGHT (h) FOR STREET NAME SIGNS SHALL BE BETWEEN 8'-6" AND 9'-0".

4. A SECONDARY SIGN IS CONSIDERED TO BE A SIGN MOUNTED BELOW ANOTHER SIGN, EXCEPT A ROUTE MARKING ASSEMBLY (CONSISTING OF A ROUTE MARKER WITH AN AUXILIARY PLATE) IS CONSIDERED TO BE A SINGLE SIGN. A SECONDARY SIGN SHALL NOT BE MOUNTED LOWER THAN 7 FEET ABOVE A PEDESTRIAN SIDEWALK OR PATHWAY IF IT WILL PROJECT MORE THAN 4" INTO THE PEDESTRIAN FACILITY.

5. FOR SIGNS LOCATED IN AREAS WHERE PEDESTRIAN MOVEMENTS ARE LIKELY TO OCCUR OR ON-STREET PARKING IS PERMITTED, THE HEIGHT (h) FROM THE LOWEST PORTION OF THE SIGN TO THE FINISHED SURFACE SHALL HAVE A CLEARANCE OF 7 FEET.

6. THE LATERAL CLEARANCE TO THE SIGN EDGE SHALL BE A MINIMUM OF 2 FEET FROM THE FACE OF CURB OR 4 FEET FROM FACE OF PERMANENT CONCRETE BARRIER, IF PRESENT. THE EDGE OF SIGN SHALL BE OUTSIDE THE DEFLECTION ZONE FOR TRAFFIC BARRIER SERVICE.

7. UNLESS OTHERWISE APPROVED BY THE ENGINEER, SIGNS PLACED BEHIND GUARDRAIL SHALL BE LOCATED SUCH THAT THE NEAR SIDE EDGE OF THE SIGN PANEL IS OUTSIDE OF THE GUARDRAIL DEFLECTION DISTANCE.

8. THE TOP OF THE SIGN POST MAY EXTEND NO MORE THAN 2 FEET ABOVE THE TOP OF THE SIGN.

9. THE SIGN POST SHALL BE PLUMB AT INSTALLATION AND SHALL NOT LEAN OR TWIST DURING USE. IN THE EVENT THE POST LEANS OR TWISTS OUT OF POSITION THE CONTRACTOR SHALL TAKE IMMEDIATE CORRECTIVE ACTION.

10. ED-3 TYPE 2 DELINEATORS SHALL BE PLACED ON ALL POSTS DURING ALL TIMES THAT THE SIGN IS COVERED. THE COLOR OF THE ED-3 DELINEATORS SHALL MATCH THE COLOR OF THE ADJACENT EDGE LINE MARKING.

WOOD POST NOTES:

11. MINIMUM SPACING (CENTER TO CENTER) BETWEEN TWO 4" x 4" WOOD POSTS SHALL BE 3 FEET. MINIMUM SPACING (CENTER TO CENTER) BETWEEN TWO WOOD POSTS OF ANY OTHER SIZE SHALL BE 8 FEET.

SQUARE TUBE POST NOTES:

12. W = (0.60) X (SIGN WIDTH)

VDOT ROAD AND BRIDGE STANDARDS	A COPY OF THE ORIGINAL SEALED AND SIGNED DRAWING IS ON FILE IN THE CENTRAL OFFICE. TEMPORARY SIGNS (FOR CONSTRUCTION, MAINTENANCE, PERMIT AND UTILITY ACTIVITIES) WOOD POST AND SQUARE TUBE POST SIGN STRUCTURES VIRGINIA DEPARTMENT OF TRANSPORTATION		SPECIFICATION REFERENCE
SHEET 1 OF 7		REVISION DATE	512 700
1320.10		08/17	

WSP-1

INSTALLATION DETAILS

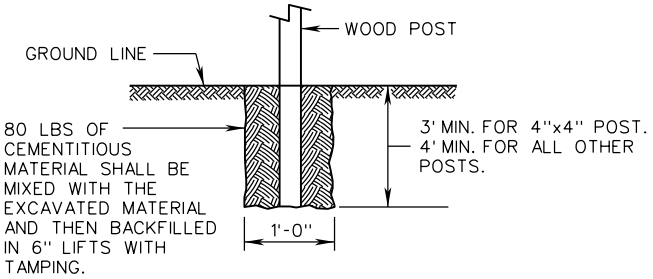

SET IN EARTH

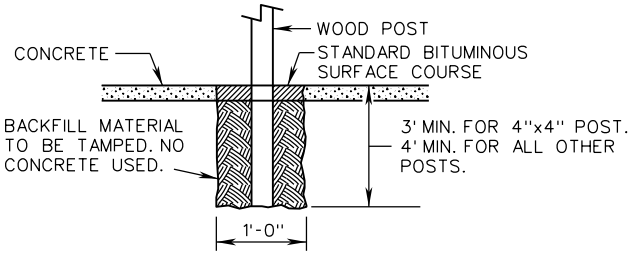

SET IN CONCRETE

METHOD OF POST DRILLING

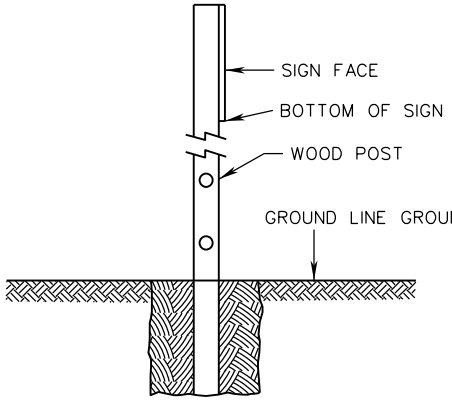

SIDE VIEW

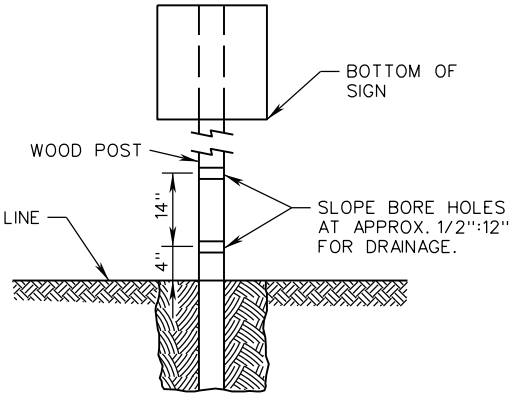

FRONT VIEW

NOTES:

1. 6" X 6" WOOD POST REQUIRES TWO 2" BORE HOLES.
2. 6" X 8" WOOD POST REQUIRES TWO 3" BORE HOLES.
3. POSTS LESS THAN 6" X 6" DO NOT REQUIRE BORE HOLES.

BRACING AND POST TOLERANCE DETAIL

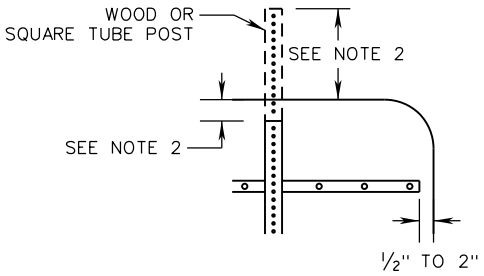

NOTES:

1. SIGN WIDTHS GREATER THAN 48" SHALL REQUIRE SIGN BRACING CONFORMING TO STANDARD STP-1.
2. THE TOP OF POST SHALL BE NO MORE THAN 2" BELOW AND NO MORE THAN 2 FEET ABOVE THE TOP OF THE SIGN.

A COPY OF THE ORIGINAL SEALED AND SIGNED DRAWING IS ON FILE IN THE CENTRAL OFFICE.

SPECIFICATION REFERENCE	TEMPORARY SIGNS (FOR CONSTRUCTION, MAINTENANCE, PERMIT AND UTILITY ACTIVITIES) WOOD OR SQUARE TUBE STEEL POST SIGN STRUCTURES VIRGINIA DEPARTMENT OF TRANSPORTATION	VDOT ROAD AND BRIDGE STANDARDS	
512 700		REVISION DATE 08/17	SHEET 2 OF 7 1320.11

WSP-1

DESIGN TABLE FOR WOOD POST

SIZE OF POST	CENTROID (FT)	MAXIMUM AREA (TOTAL OF SIGNS) (FT^2)			COMMENTS
		SINGLE-POST	TWO-POST	THREE-POST	
4" X 4"	8	7	13	20	SEE NOTE 1
	9	6	12	18	
	10	5	11	16	
	11	5	10	15	
	12	4	9	13	
4" X 6" (SEE NOTE 2)	8	18	37	55	
	9	16	33	49	
	10	15	29	44	
	11	13	27	40	
	12	12	25	37	
5" X 5"	8	15	31	46	
	9	14	27	41	
	10	12	24	37	
	11	11	22	33	
	12	10	20	31	
6" X 6"	8	29	58	87	
	9	26	51	77	
	10	23	46	69	
	11	21	42	63	
	12	19	39	58	
	13	18	36	53	
6" X 8" (SEE NOTE 2)	8	52	103	155	
	9	46	92	138	
	10	41	83	124	
	11	38	75	113	
	12	34	69	103	
	13	32	64	95	
	14	22	44	66	

NOTES:

1. FOR A SINGLE 4" X 4" POST THE MAXIMUM TOTAL SIGN CAN BE INCREASED TO 16 SQUARE FEET PROVIDED:

   A. THE MAXIMUM VERTICAL CLEARANCE BETWEEN THE GROUND LEVEL AND BOTTOM OF THE SIGN DOES NOT EXCEED 7'-6" WHILE MAINTAINING A 7'-0" MINIMUM MOUNTING HEIGHT (h) BETWEEN BOTTOM OF SIGN AND TOP OF ROADWAY SURFACE AT THE EDGE OF TRAVEL LANE.

   B. CONTRACTOR SUPPLIES DEPARTMENT WITH MATERIALS CERTIFICATION FOR WOOD POSTS TO ENSURE CONFORMANCE WITH SECTION 236 OF THE SPECIFICATIONS.

2. LARGER DIMENSION OF WOOD POST SHALL BE IN DIRECTION OF (PARALLEL TO) TRAFFIC.

3. CENTROID SHALL BE DETERMINED IN ACCORDANCE WITH STANDARD PCS-1.

A COPY OF THE ORIGINAL SEALED AND SIGNED DRAWING IS ON FILE IN THE CENTRAL OFFICE.

VDOT
ROAD AND BRIDGE STANDARDS

SHEET 3 OF 7
1320.12

REVISION DATE
08/17

TEMPORARY SIGNS
(FOR CONSTRUCTION, MAINTENANCE, PERMIT AND UTILITY ACTIVITIES)
WOOD POST SIGN STRUCTURES
VIRGINIA DEPARTMENT OF TRANSPORTATION

SPECIFICATION REFERENCE
512
700

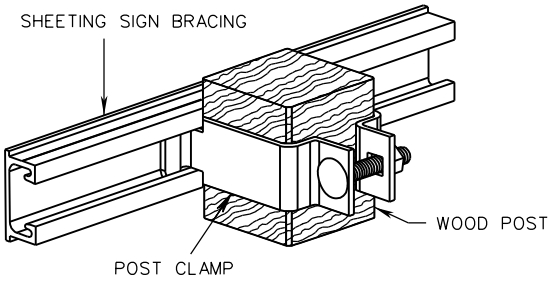

WOOD POST & BRACE
(CONNECTING JUNCTION)

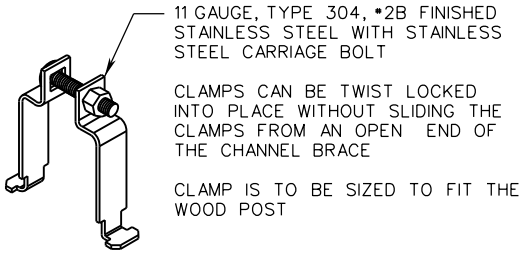

CLAMP DETAIL

NOTES:

1. NYLON WASHER SHALL BE 1/16" THICK MINIMUM WITH AN OUTSIDE DIAMETER OF 1" AND AN INSIDE DIAMETER OF 7/16".
2. DRIVE RIVET SHALL BE 3/16" OR 3/8" ALUMINUM FLAT HEAD RIVET WITH STEEL PINS AND NYLON OR RUBBER WASHER.
3. SIGN PANEL ATTACHMENTS TO SQUARE TUBE POSTS SHALL BE AS PER STANDARD STP-1.
4. THE HEADS OF ALL DRIVE RIVETS AND BOLTS PROTRUDING FROM TEMPORARY SIGNS MAY BE UNCOATED. IF POWDER COATED, THE HEADS SHALL MATCH THE COLOR OF THE SIGN SHEETING.
5. BOLTS, NUTS, AND LOCK WASHERS SHALL BE GALVANIZED OR STAINLESS STEEL.
6. DRIVE RIVET SHALL NOT BE USED FOR SIGNS WITHOUT BRACING

A COPY OF THE ORIGINAL SEALED AND SIGNED DRAWING IS ON FILE IN THE CENTRAL OFFICE.

SPECIFICATION REFERENCE	TEMPORARY SIGNS (FOR CONSTRUCTION, MAINTENANCE, PERMIT AND UTILITY ACTIVITIES) WOOD POST SIGN STRUCTURES - ATTACHMENT DETAILS VIRGINIA DEPARTMENT OF TRANSPORTATION	VDOT ROAD AND BRIDGE STANDARDS	
512 700		REVISION DATE 08/17	SHEET 4 OF 7 1320.13

WSP-1

WOOD POSTS NOT REQUIRING BRACING

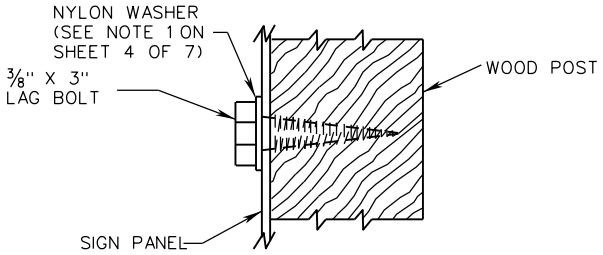

SINGLE SIGN PANEL DETAIL

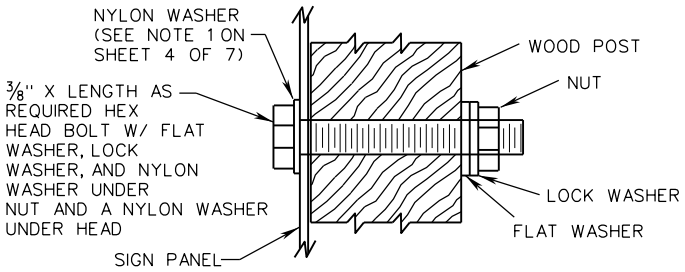

SINGLE SIGN PANEL ALTERNATE METHOD DETAIL

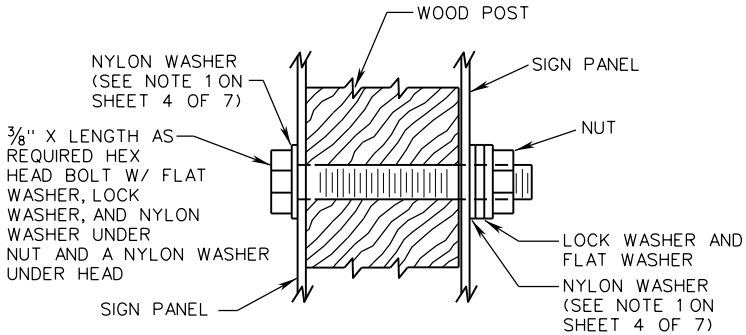

BACK-TO-BACK SIGN PANEL DETAIL

WOOD POSTS REQUIRING BRACING

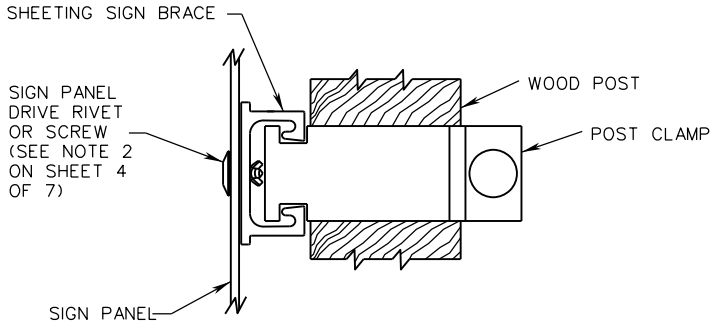

SIGN PANEL ATTACHMENT DETAIL

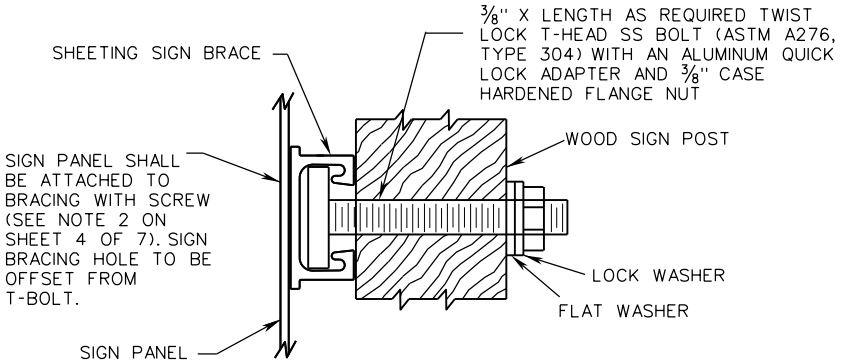

SINGLE SIGN PANEL ALTERNATE METHOD DETAIL

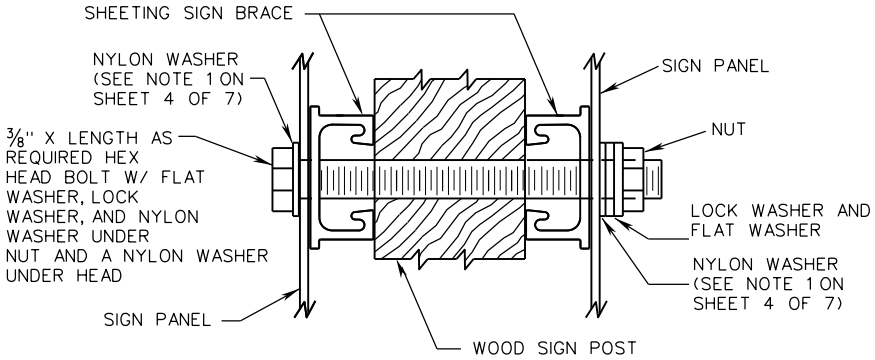

BACK-TO-BACK SIGN PANEL DETAIL

NOTES:

1. SEE SHEET 4 OF 7 FOR NOTES.

VDOT ROAD AND BRIDGE STANDARDS	A COPY OF THE ORIGINAL SEALED AND SIGNED DRAWING IS ON FILE IN THE CENTRAL OFFICE.		SPECIFICATION REFERENCE
SHEET 5 OF 7	TEMPORARY SIGNS (FOR CONSTRUCTION, MAINTENANCE, PERMIT AND UTILITY ACTIVITIES) WOOD POST SIGN STRUCTURES - ATTACHMENT DETAILS	REVISION DATE 08/17	512 700
1320.14	VIRGINIA DEPARTMENT OF TRANSPORTATION		

DESIGN TABLE FOR SQUARE TUBE POST

SIZE OF POST	CENTROID (FT)	MAXIMUM AREA (TOTAL OF SIGNS) (FT^2)			COMMENTS
		SINGLE-POST	TWO-POST	THREE-POST	
2 INCH 14 GA.	8	10.7	21.4		TYPE A, TYPE D, OR TYPE F FOUNDATION (SEE NOTE 4)
	9	9.5	19.0		
	10	8.5	17.0		
	11	7.7	15.4		
	12	7.1	14.2		
	13	6.5	13.0		
	14	6.1	12.2		
2½ INCH 12 GA.	8	21.5			TYPE A OR TYPE E FOUNDATION (SEE NOTE 4)
	9	19.1			
	10	17.2			
	11	15.6			
	12	14.3			
	13	13.2			
	14	12.3			
2½ INCH 10 GA.	8	24.8	49.6	74.4	TYPE B OR TYPE C FOUNDATION (SEE NOTE 4)
	9	22.0	44.0	66.0	
	10	19.8	39.6	59.4	
	11	18.0	36.0	54.0	
	12	16.5	33.0	49.5	
	13	15.2	30.4	45.6	
	14	14.1	28.2	42.3	
2½ INCH 10 GA. WITH 2 3/16 INCH 10 GA. INNER POST (SEE NOTE 1)	8	43.4	86.8	130.2	TYPE B OR TYPE C FOUNDATION (SEE NOTE 4)
	9	38.6	77.2	115.8	
	10	34.7	69.4	104.1	
	11	31.6	63.2	94.8	
	12	28.9	57.8	86.7	
	13	26.7	53.4	80.1	
	14	24.8	49.6	74.4	

NOTES:

1. THE INNER POST SHALL BE 6 FEET IN LENGTH.
2. CENTROID SHALL BE DETERMINED IN ACCORDANCE WITH PCS-1.
3. MINIMUM COLD FORMED YIELD STRENGTH SHALL BE:
   14 GA. AND 12 GA. = 60 KSI
   10 GA. = 55 KSI
4. TYPE A, B, C, D, E, AND F FOUNDATIONS SHALL BE IN ACCORDANCE WITH STANDARD STP-1.

A COPY OF THE ORIGINAL SEALED AND SIGNED DRAWING IS ON FILE IN THE CENTRAL OFFICE.

SPECIFICATION REFERENCE	TEMPORARY SIGNS	VDOT ROAD AND BRIDGE STANDARDS
512 700	(FOR CONSTRUCTION, MAINTENANCE, PERMIT AND UTILITY ACTIVITIES) SQUARE TUBE POST SIGN STRUCTURES VIRGINIA DEPARTMENT OF TRANSPORTATION	REVISION DATE 08/17 — SHEET 6 OF 7 — 1320.15

WSP-1

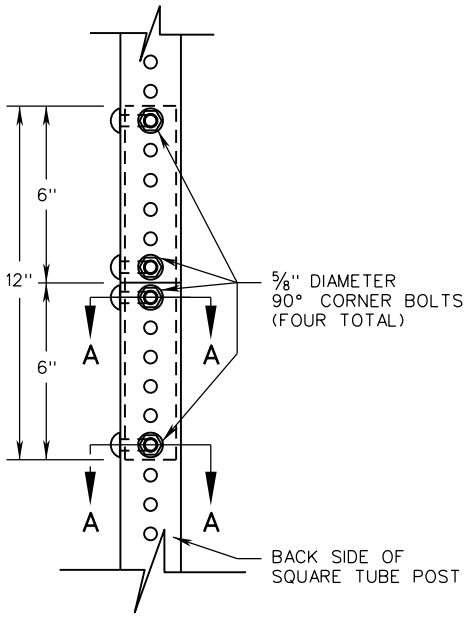

SPLICE DETAIL

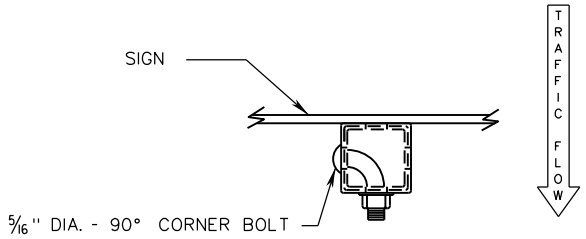

SECTION A-A
CORNER BOLT DETAIL

SPLICE SIZE TABLE	
POST SIZE	SPLICE POST SIZE
2 INCH, 14 GAUGE	1 3/4 INCH, 14 GAUGE
2 1/2 INCH, 12 GAUGE	2 1/4 INCH, 12 GAUGE
2 1/2 INCH, 10 GAUGE	2 3/16 INCH, 10 GAUGE

NOTES:

1. ONLY ONE SPLICE PER POST WILL BE ALLOWED.
2. SPLICES SHALL BE A MINIMUM OF 24" ABOVE GROUND LINE.
3. SPLICES SHALL ONLY BE PERMITTED FOR TEMPORARY INSTALLATIONS.
4. CORNER BOLTS SHALL BE INSTALLED SO THE BOLT HEADS ARE ON ONE SIDE OF THE SIGN POST. THE NUT SHALL BE ON THE BACK OF THE POST. SEE SPLICE DETAIL.

A COPY OF THE ORIGINAL SEALED AND SIGNED DRAWING IS ON FILE IN THE CENTRAL OFFICE.

VDOT
ROAD AND BRIDGE STANDARDS

SHEET 7 OF 7
1320.16

REVISION DATE
NEW 08/17

TEMPORARY SIGNS
(FOR CONSTRUCTION, MAINTENANCE, PERMIT AND UTILITY ACTIVITIES)
SQUARE TUBE POST SIGN STRUCTURES
VIRGINIA DEPARTMENT OF TRANSPORTATION

SPECIFICATION REFERENCE
512
700

STP-1

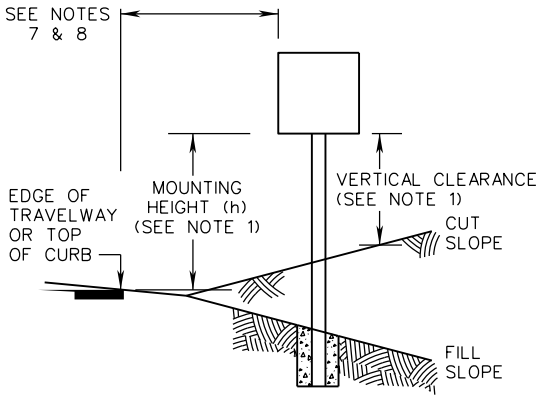

SINGLE POST INSTALLATIONS

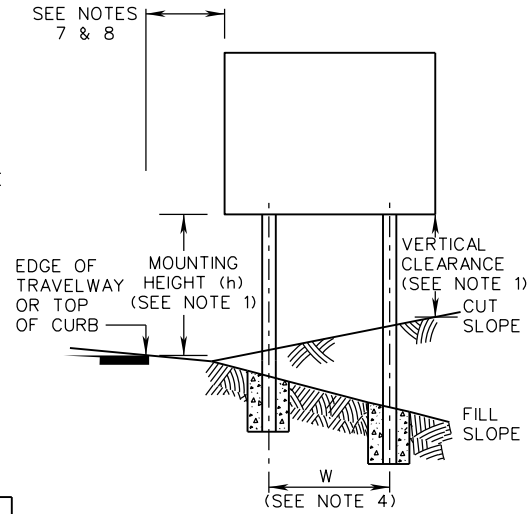

TWO POST INSTALLATIONS

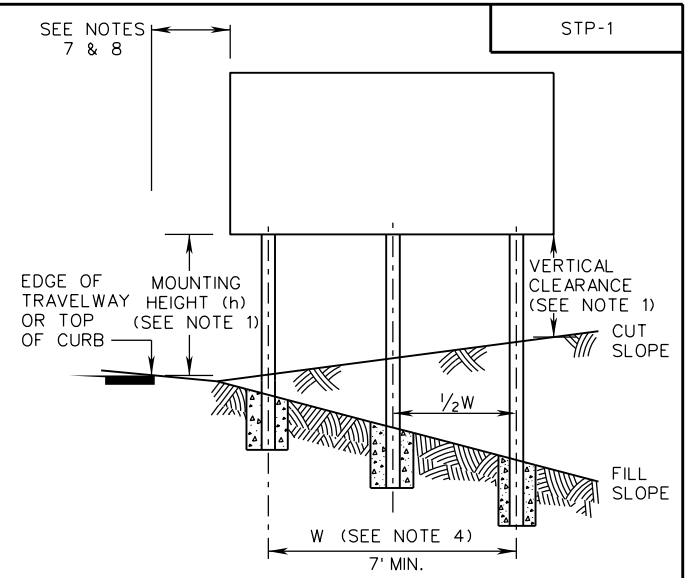

THREE POST INSTALLATIONS

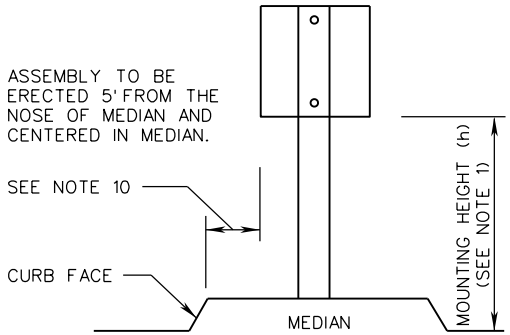

SINGLE POST MEDIAN INSTALLATIONS

MINIMUM MOUNTING HEIGHT (h) (SEE NOTE 1)

SIGN TYPES	FREEWAYS, EXPRESSWAYS, AND FULL CONTROL ACCESS HIGHWAYS	OTHER HIGHWAYS	
		RURAL AREAS	NON-RURAL AREAS
DIRECTIONAL SIGNS	7'	5'	7'
ROUTE MARKERS, WARNING AND REGULATORY SIGNS	7'	5'	7'
SECONDARY SIGNS (SEE NOTE 3)	5'	4'	7'

NOTES:

1. FOR ALL SIGNS EXCEPT STREET NAME SIGNS:
   A. MINIMUM MOUNTING HEIGHT (h) SHALL BE IN ACCORDANCE WITH THE "MINIMUM MOUNTING HEIGHT" TABLE ON THIS SHEET. MOUNTING HEIGHT IS MEASURED FROM THE ROADWAY ELEVATION AT THE EDGE OF THE TRAVEL WAY TO THE BOTTOM OF THE SIGN PANEL.
   B. MAXIMUM MOUNTING HEIGHT (h) FOR THE BOTTOM-MOST SIGN PANEL(S) SHALL BE 8 FEET, EXCEPT WHEN NECESSARY TO ACHIEVE MINIMUM VERTICAL CLEARANCE BENEATH SIGN PANEL AS PER NOTE 1C.
   C. MINIMUM VERTICAL CLEARANCE (DISTANCE BETWEEN BOTTOM OF SIGN PANEL AND FINISHED GRADE BENEATH THE PANEL) SHALL BE 7 FEET FOR ANY PORTION OF THE SIGN WITHIN THE CLEAR ZONE. THIS MINIMUM VERTICAL CLEARANCE MAY BE REDUCED TO 5 FEET FOR EITHER OF THE FOLLOWING CONDITIONS:
      - WHEN SIGNS OR PORTIONS OF SIGNS ARE LOCATED MORE THAN 10 FEET UP A CUT SLOPE GREATER THAN 3:1, OR
      - WHEN THE SIGN IS LOCATED AT LEAST THE MINIMUM DISTANCE BEHIND CURB, BARRIER, OR GUARDRAIL AS PER NOTES 7 AND 8.
2. MOUNTING HEIGHT (h) FOR STREET NAME SIGNS SHALL BE BETWEEN 8'-6" AND 9'-0".
3. A SECONDARY SIGN IS CONSIDERED TO BE A SIGN MOUNTED BELOW ANOTHER SIGN, EXCEPT A ROUTE MARKER WITH AN AUXILIARY PLATE IS CONSIDERED TO BE A SINGLE SIGN. A SECONDARY SIGN SHALL NOT BE MOUNTED LOWER THAN 7 FEET ABOVE A PEDESTRIAN SIDEWALK OR PATHWAY IF IT WILL PROJECT INTO THE PEDESTRIAN FACILITY.
4. W = (0.60) X (SIGN PANEL WIDTH)
5. SQUARE TUBE SIGN POSTS REQUIRING A BREAKAWAY SUPPORT SYSTEM SHALL BE AN FHWA APPROVED BREAKAWAY SUPPORT SYSTEM CONFORMING TO AASHTO'S STANDARD SPECIFICATIONS FOR STRUCTURAL SUPPORTS FOR HIGHWAY SIGNS, LUMINIARIES AND TRAFFIC SIGNALS.
6. FOR SIGNS LOCATED IN AREAS WHERE PEDESTRIAN MOVEMENTS ARE LIKELY TO OCCUR OR ON-STREET PARKING IS PERMITTED, THE HEIGHT FROM THE LOWEST PORTION OF THE SIGN PANEL TO THE FINISHED SURFACE SHALL HAVE A MINIMUM CLEARANCE OF 7 FEET.
7. THE LATERAL CLEARANCE TO THE SIGN PANEL SHALL BE A MINIMUM OF 2 FEET FROM THE FACE OF CURB OR 4 FEET FROM FACE OF BARRIER, IF PRESENT.
8. UNLESS OTHERWISE APPROVED BY THE ENGINEER, SIGNS PLACED BEHIND GUARDRAIL SHALL BE LOCATED SUCH THAT THE NEAR SIDE EDGE OF THE SIGN PANEL IS OUTSIDE OF THE GUARDRAIL DEFLECTION DISTANCE.
9. FOR SIGNS AT INTERCHANGE EXIT RAMPS, REFER TO STANDARD ISD-1.
10. 2' MINIMUM FOR MEDIANS OVER 10' IN WIDTH. 12" MINIMUM FOR MEDIANS 10' OR LESS IN WIDTH UNLESS SHOWN OTHERWISE IN THE CONTRACT DOCUMENTS.

SPECIFICATION REFERENCE	A COPY OF THE ORIGINAL SEALED AND SIGNED DRAWING IS ON FILE IN THE CENTRAL OFFICE.	VDOT ROAD AND BRIDGE STANDARDS
700	SQUARE TUBE SIGN POST VIRGINIA DEPARTMENT OF TRANSPORTATION	REVISION DATE 08/17 SHEET 1 OF 12 1321.10

STP-1

TABLE 1
FOR HAMPTON ROADS DISTRICT (SEE NOTE 5)

SIZE OF POST	CENTROID (FT)	MAXIMUM AREA (TOTAL OF SIGN PANELS) (FT^2)			COMMENTS
		SINGLE-POST	TWO-POST	THREE-POST	
2 INCH 14 GA.	8	5.8			TYPE A, TYPE D, OR TYPE F FOUNDATION AS SPECIFIED IN THE CONTRACT DOCUMENTS.
	9	5.1			
	10	4.6			
	11	4.2			
	12	3.8			
	13	3.5			
	14	3.3			
2½ INCH 12 GA.	8	11.8	23.6		SINGLE POST: TYPE A OR TYPE E FOUNDATION. MULTI-POST: TYPE B OR TYPE C FOUNDATION. AS SPECIFIED IN THE CONTRACT DOCUMENTS.
	9	10.5	21.0		
	10	9.4	18.8		
	11	8.6	17.2		
	12	7.8	15.6		
	13	7.2	14.5		
	14	6.7	13.5		
2½ INCH 10 GA.	8	13.6	27.2	40.8	TYPE B OR TYPE C FOUNDATION AS SPECIFIED IN THE CONTRACT DOCUMENTS.
	9	12.1	24.2	36.3	
	10	10.9	21.8	32.7	
	11	9.9	19.8	29.7	
	12	9.1	18.2	27.3	
	13	8.4	16.8	25.2	
	14	7.8	15.6	23.4	
2½ INCH 10 GA. WITH 2³⁄₁₆ INCH 10 GA. INNER POST (SEE NOTE 1)	8	23.9	47.8	71.7	TYPE B OR TYPE C FOUNDATION AS SPECIFIED IN THE CONTRACT DOCUMENTS.
	9	21.2	42.4	63.6	
	10	19.1	38.2	57.3	
	11	17.4	34.8	52.2	
	12	15.9	31.8	47.7	
	13	14.7	29.4	44.1	
	14	13.6	27.2	40.8	

NOTES:

1. THE INNER POST SHALL BE 6 FEET IN LENGTH.
2. CENTROID SHALL BE DETERMINED IN ACCORDANCE WITH PCS-1.
3. MINIMUM COLD FORMED YIELD STRENGTH SHALL BE:
   14 GA. AND 12 GA. = 60 KSI
   10 GA. = 55 KSI
4. FOLLOW SIGN BRACING DETAILS (SEE SHEET 11 OF 12) FOR MAXIMUM SIGN PANEL WIDTHS AND SIGN BRACING SPACING.
5. TABLE 1 SHALL BE USED FOR THE HAMPTON ROADS DISTRICT, EXCEPT THE CITY OF EMPORIA AND COUNTIES OF GREENSVILLE, SUSSEX, AND SOUTHAMPTON SHALL USE TABLE 2.

A COPY OF THE ORIGINAL SEALED AND SIGNED DRAWING IS ON FILE IN THE CENTRAL OFFICE.

SQUARE TUBE SIGN POST

VIRGINIA DEPARTMENT OF TRANSPORTATION

SPECIFICATION REFERENCE
700

2016 ROAD & BRIDGE STANDARDS

TABLE 2
FOR BRISTOL, SALEM, LYNCHBURG, RICHMOND, FREDERICKSBURG, CULPEPER, STAUNTON, AND NORTHERN VIRGINIA DISTRICTS (SEE NOTE 5)

SIZE OF POST	CENTROID (FT)	MAXIMUM AREA (TOTAL OF SIGN PANELS) (FT^2)			COMMENTS
		SINGLE-POST	TWO-POST	THREE-POST	
2 INCH 14 GA.	8	10.7	21.4		TYPE A, TYPE D, OR TYPE F FOUNDATION AS SPECIFIED IN THE CONTRACT DOCUMENTS.
	9	9.5	19.0		
	10	8.5	17.0		
	11	7.7	15.4		
	12	7.1	14.2		
	13	6.5	13.0		
	14	6.1	12.2		
2½ INCH 12 GA.	8	21.5			TYPE A OR TYPE E FOUNDATION.
	9	19.1			
	10	17.2			
	11	15.6			
	12	14.3			
	13	13.2			
	14	12.3			
2½ INCH 10 GA.	8	24.8	49.6	74.4	TYPE B OR TYPE C FOUNDATION AS SPECIFIED IN THE CONTRACT DOCUMENTS.
	9	22.0	44.0	66.0	
	10	19.8	39.6	59.4	
	11	18.0	36.0	54.0	
	12	16.5	33.0	49.5	
	13	15.2	30.4	45.6	
	14	14.1	28.2	42.3	
2½ INCH 10 GA. WITH 2 3/16 INCH 10 GA. INNER POST (SEE NOTE 1)	8	43.4	86.8	130.2	TYPE B OR TYPE C FOUNDATION AS SPECIFIED IN THE CONTRACT DOCUMENTS.
	9	38.6	77.2	115.8	
	10	34.7	69.4	104.1	
	11	31.6	63.2	94.8	
	12	28.9	57.8	86.7	
	13	26.7	53.4	80.1	
	14	24.8	49.6	74.4	

NOTES:

1. THE INNER POST SHALL BE 6 FEET IN LENGTH.
2. CENTROID SHALL BE DETERMINED IN ACCORDANCE WITH PCS-1.
3. MINIMUM COLD FORMED YIELD STRENGTH SHALL BE:
   14 GA. AND 12 GA. = 60 KSI
   10 GA. = 55 KSI
4. FOLLOW SIGN BRACING DETAILS (SEE SHEET 11 OF 12) FOR MAXIMUM SIGN PANEL WIDTHS AND SIGN BRACING SPACING.
5. TABLE 2 SHALL ALSO BE USED FOR THE CITY OF EMPORIA AND COUNTIES OF GREENSVILLE, SUSSEX, AND SOUTHAMPTON IN HAMPTON ROADS DISTRICT.

STP-1

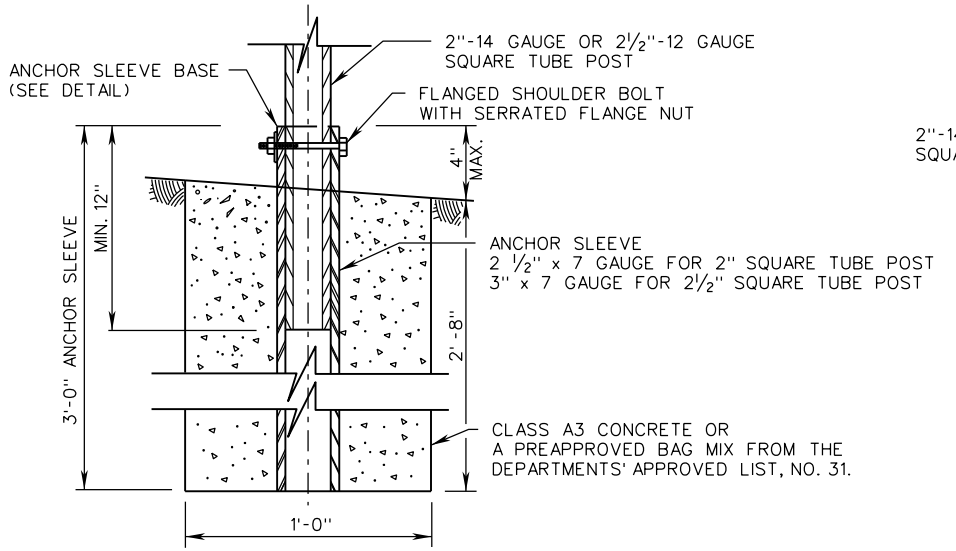

FOUNDATION TYPE A

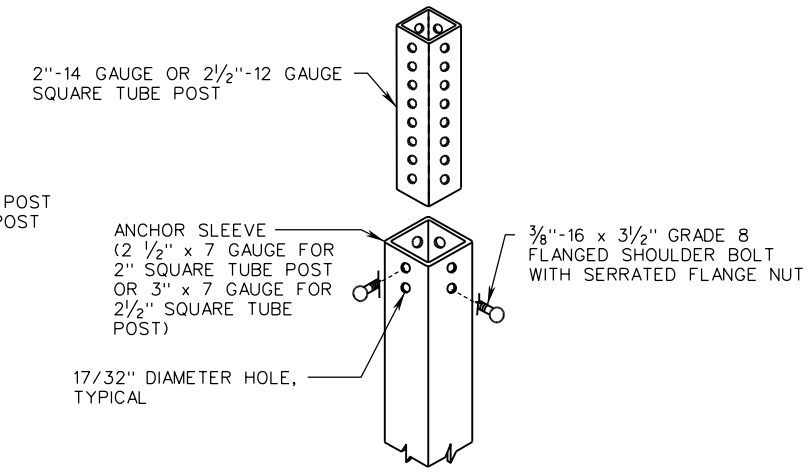

ANCHOR SLEEVE BASE DETAIL

VDOT ROAD AND BRIDGE STANDARDS	A COPY OF THE ORIGINAL SEALED AND SIGNED DRAWING IS ON FILE IN THE CENTRAL OFFICE.		SPECIFICATION REFERENCE
SHEET 4 OF 12	SQUARE TUBE SIGN POST		700
1321.13	FOUNDATION TYPE A DETAILS	REVISION DATE NEW 01/15	
	VIRGINIA DEPARTMENT OF TRANSPORTATION		

STP-1

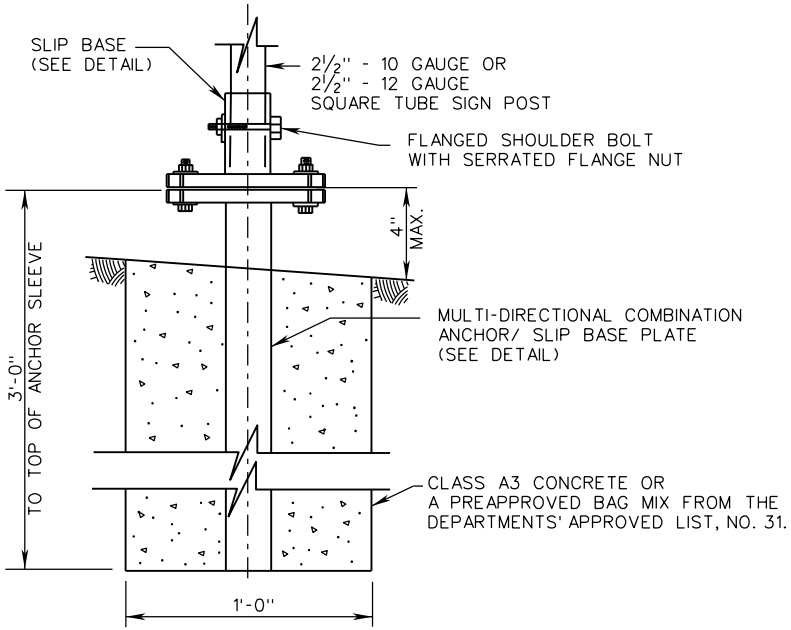

FOUNDATION TYPE B

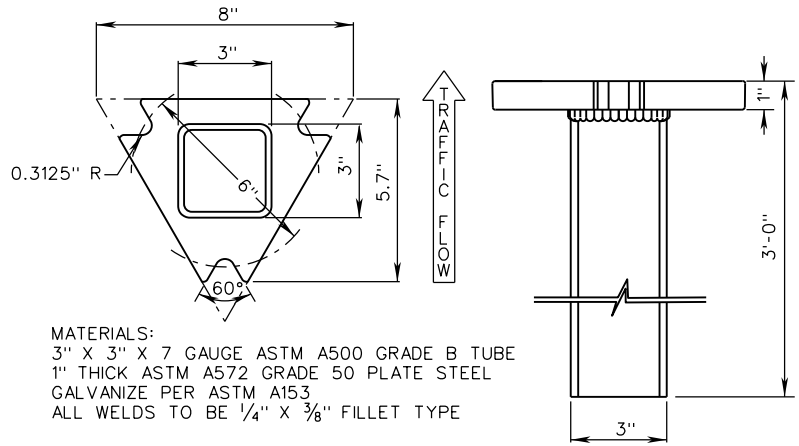

MATERIALS:
3" X 3" X 7 GAUGE ASTM A500 GRADE B TUBE
1" THICK ASTM A572 GRADE 50 PLATE STEEL
GALVANIZE PER ASTM A153
ALL WELDS TO BE ¼" X ⅜" FILLET TYPE

MULTI-DIRECTIONAL COMBINATION
ANCHOR/SLIP BASE PLATE

SPECIFICATION REFERENCE	A COPY OF THE ORIGINAL SEALED AND SIGNED DRAWING IS ON FILE IN THE CENTRAL OFFICE.	VDOT ROAD AND BRIDGE STANDARDS	
700	SQUARE TUBE SIGN POST FOUNDATION TYPE B DETAILS VIRGINIA DEPARTMENT OF TRANSPORTATION	REVISION DATE NEW 01/15	SHEET 5 OF 12 1321.14

STP-1

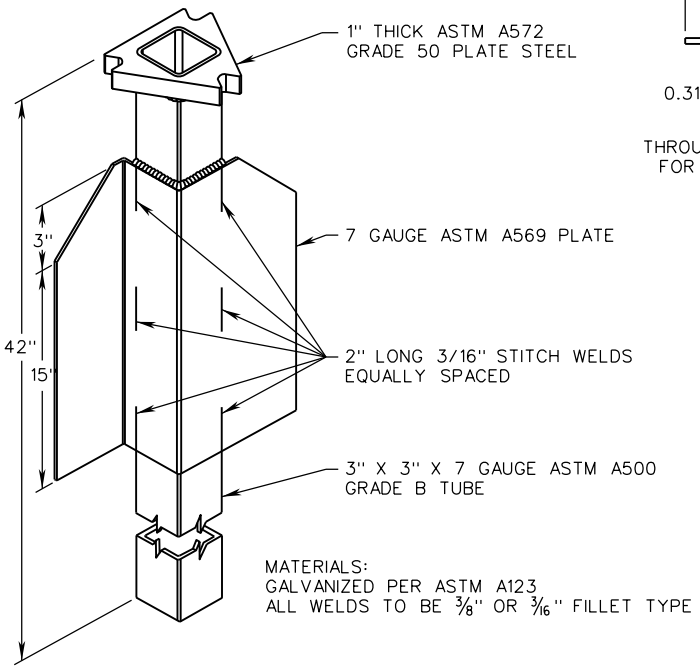

FOUNDATION TYPE C

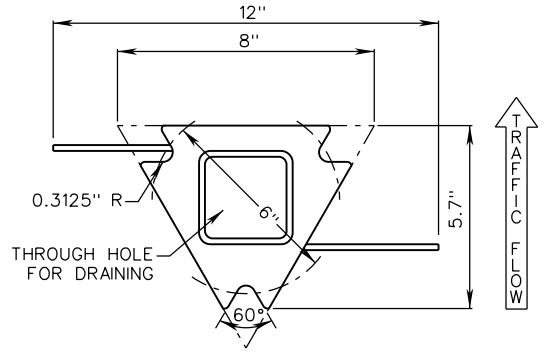

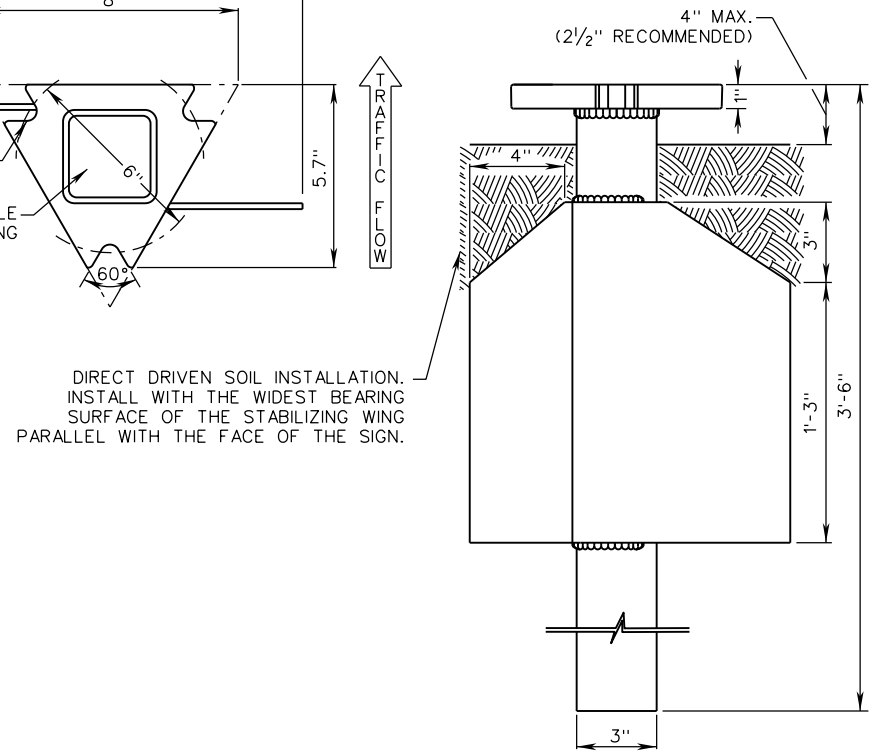

8" TRIANGULAR MULTI-DIRECTIONAL
COMBINATION ANCHOR/SLIP BASE PLATE - SOIL

VDOT ROAD AND BRIDGE STANDARDS		A COPY OF THE ORIGINAL SEALED AND SIGNED DRAWING IS ON FILE IN THE CENTRAL OFFICE.	SPECIFICATION REFERENCE
SHEET 6 OF 12	REVISION DATE	SQUARE TUBE SIGN POST	
1321.15	NEW 01/15	FOUNDATION TYPE C DETAILS	700
		VIRGINIA DEPARTMENT OF TRANSPORTATION	

STP-1

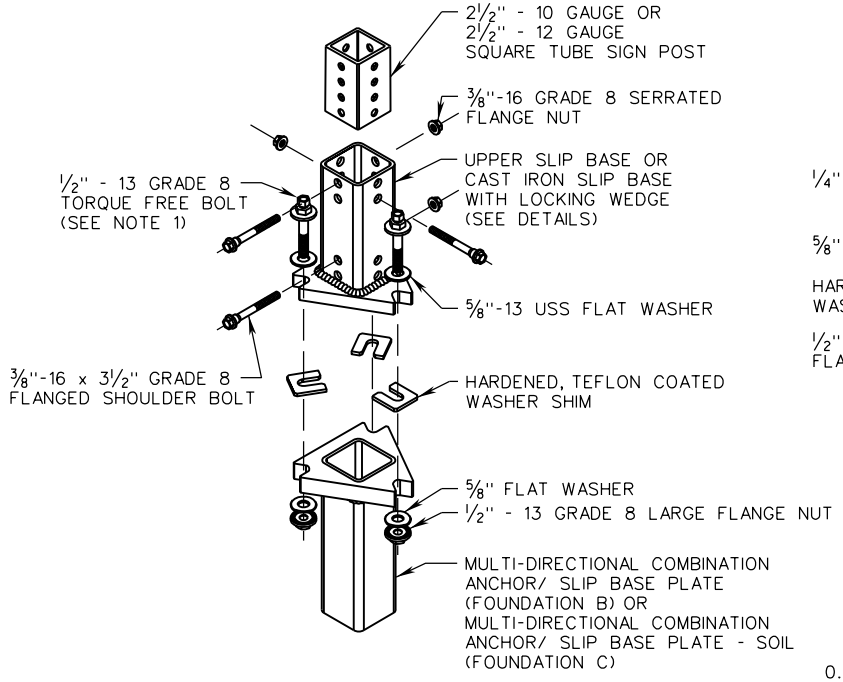

SLIP BASE BREAKAWAY DETAIL

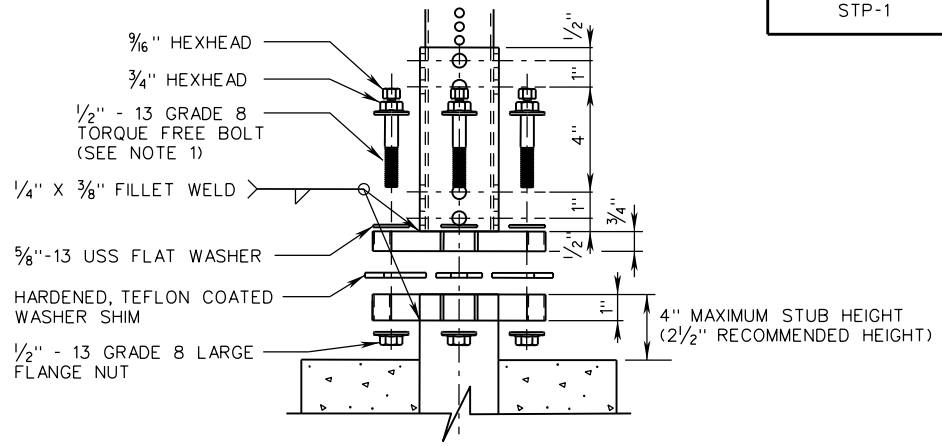

SLIP BASE BREAKAWAY PROFILE DETAIL

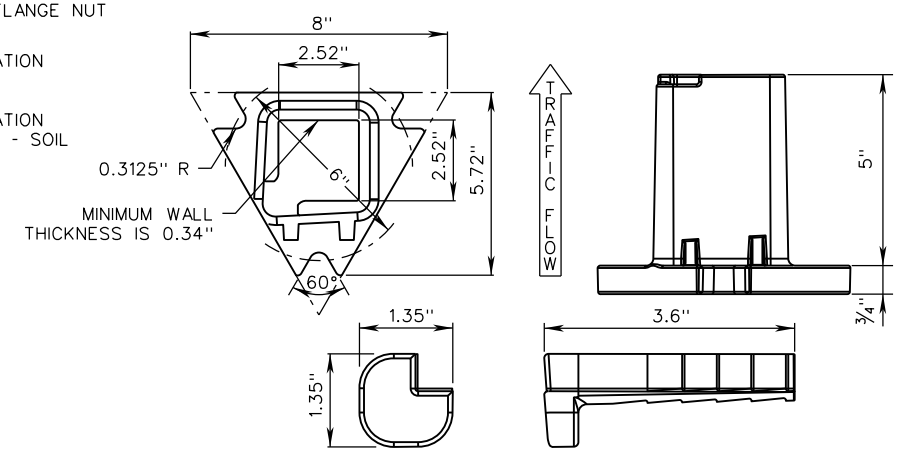

REDI-TORQUE MULTI-DIRECTIONAL BOLT ON SAE1035 STEEL FORGING SLIP BASE TOP FOR 2½" SQUARE POST WITH CAST IRON LOCKING WEDGE

MATERIALS:
TUBE RECEIVER -
3" x 3" x 7 GAUGE
ASTM A500
GRADE B TUBE
PLATE - ASTM
A572 GRADE 50

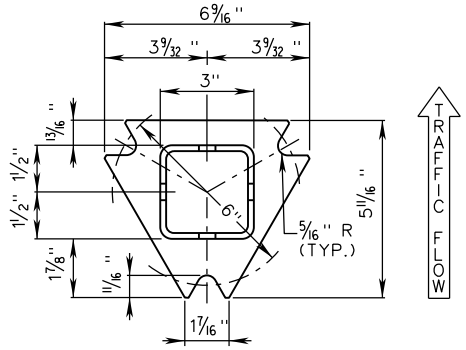

TOP POST RECEIVER/
FOR 2½" SQUARE POST

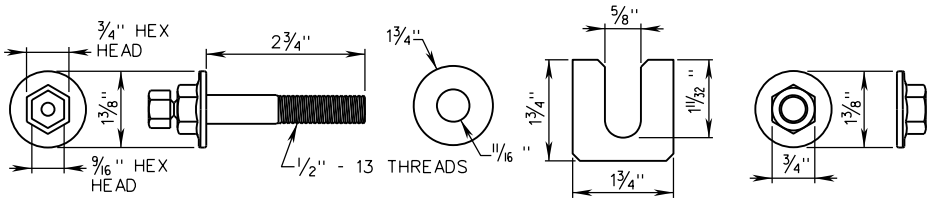

TORQUE FREE MATCH PLATE HARDWARE

NOTES:

1. TIGHTEN THE TORQUE FREE BOLT USING THE LARGER ¾" HEX HEAD, THEN LOOSEN THE BOLTS BY THREE COMPLETE TURNS USING THE ¾" HEX HEAD. RETIGHTEN EACH TORQUE BOLT USING THE SMALLER 9/16" HEX HEAD UNTIL THE 9/16" HEX HEAD TWISTS OFF.

SPECIFICATION REFERENCE	A COPY OF THE ORIGINAL SEALED AND SIGNED DRAWING IS ON FILE IN THE CENTRAL OFFICE.	VDOT ROAD AND BRIDGE STANDARDS	
700	SQUARE TUBE SIGN POST FOUNDATION TYPE B AND C DETAILS VIRGINIA DEPARTMENT OF TRANSPORTATION	REVISION DATE NEW 01/15	SHEET 7 OF 12 1321.16

STP-1

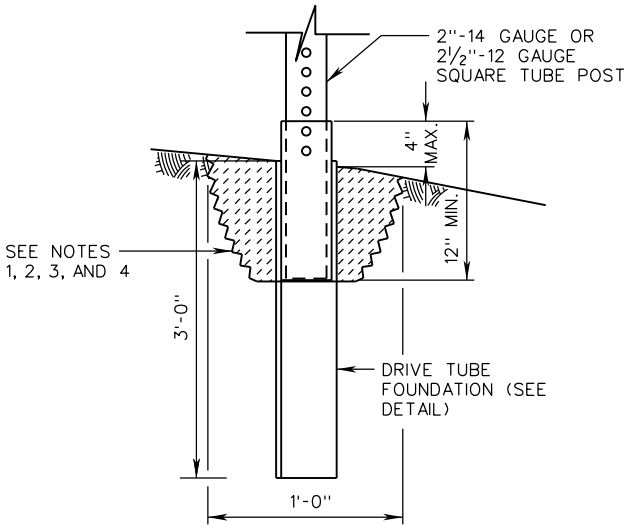

FOUNDATION TYPE D AND E

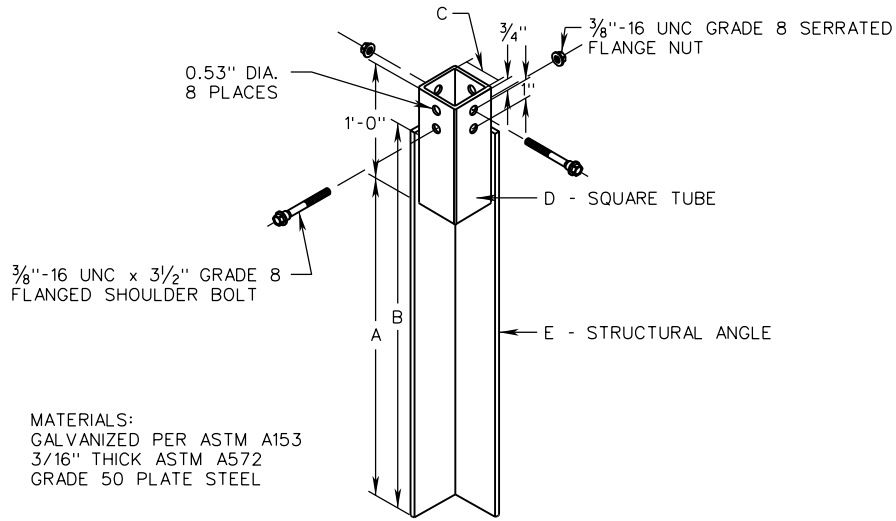

DRIVE TUBE FOUNDATION DETAIL

NOTES:

1. EXCAVATE TO A DEPTH OF NO LESS THAN 8" AND NO GREATER THAN 12" PRIOR TO INSTALLATION OF DRIVE TUBE FOUNDATION.
2. THE EXCAVATED AREA SHALL BE BACKFILLED WITH A CEMENTITIOUS MATERIAL AND SHALL BE TAPPED WITH EACH 6" LIFT.
3. THE SQUARE TUBE POST SHALL BE INSERTED INTO THE SLEEVE OF THE DRIVE TUBE FOUNDATION A MINIMUM OF 12".
4. DRIVE CAP SHALL BE UTILIZED FOR INSTALLATION OF DRIVE TUBE FOUNDATION. WHEN USING A POWER DRIVER, A SHANK SHALL ALSO BE REQUIRED.

DRIVE TUBE FOUNDATION TABLE

FOUNDATION TYPE	SIZE OF POST	DRIVE TUBE FOUNDATION DIMENSION	
TYPE D	2 INCH 14 GA.	A	27"
		B	36"
		C	2⅛"
		D	2½" X 2½" X 3/16" ASTM A500 GRADE B
		E	2½" X 2½" X 3/16" ASTM A36
TYPE E	2½ INCH 12 GA.	A	27"
		B	36"
		C	2⅝"
		D	3" X 3" X 3/16" ASTM A500 GRADE B
		E	3" X 3" X 3/16" ASTM A36

VDOT
ROAD AND BRIDGE STANDARDS

SHEET 8 OF 12
1321.17

REVISION DATE
08/17

A COPY OF THE ORIGINAL SEALED AND SIGNED DRAWING IS ON FILE IN THE CENTRAL OFFICE.

SQUARE TUBE SIGN POST

FOUNDATION TYPE D AND E DETAILS

VIRGINIA DEPARTMENT OF TRANSPORTATION

SPECIFICATION REFERENCE
700

STP-1

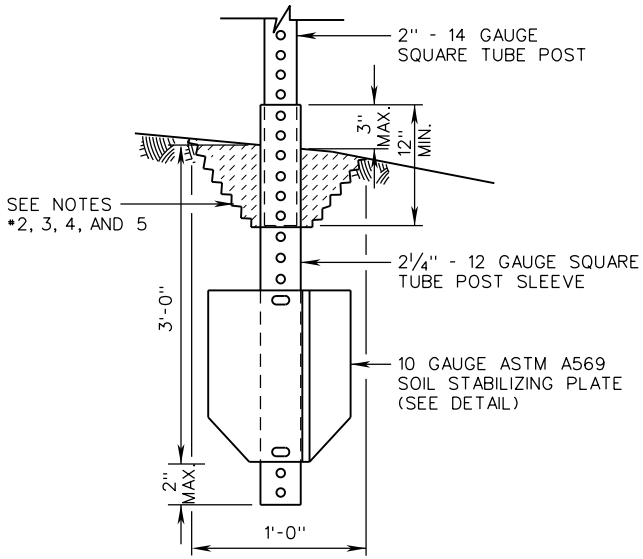

FOUNDATION TYPE F

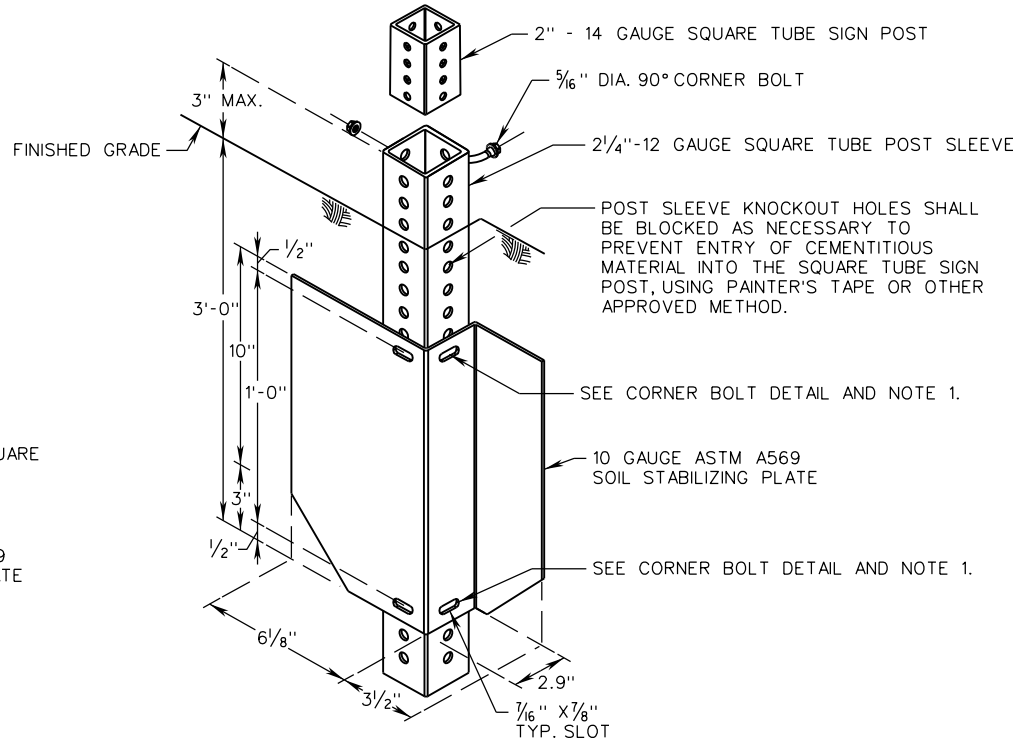

SOIL STABILIZING PLATE FOUNDATION DETAIL

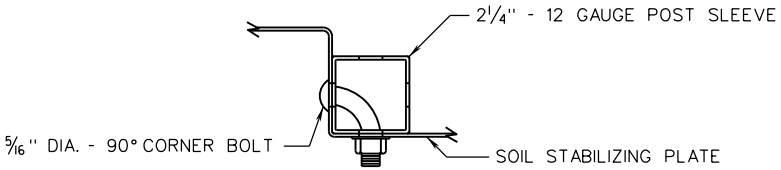

CORNER BOLT DETAIL

NOTES:

1. CORNER BOLTS SHALL BE 5/16" DIA. TRUSS HEAD BOLT WITH SERRATED FLANGE NUT. TWO CORNER BOLTS WILL BE REQUIRED TO CONNECT THE 2¼" POST SLEEVE TO THE SOIL STABILIZING PLATE.
2. EXCAVATE TO A DEPTH OF NO LESS THAN 8" AND NO GREATER THAN 12" PRIOR TO INSTALLATION OF SOIL STABILIZING PLATE FOUNDATION.
3. THE EXCAVATED AREA SHALL BE BACKFILLED WITH A CEMENTITIOUS MATERIAL AND SHALL BE TAPPED WITH EACH 6" LIFT.
4. THE 2" SQUARE TUBE POST SHALL BE INSERTED INTO THE 2¼" POST SLEEVE A MINIMUM OF 12".
5. DRIVE CAP SHALL BE UTILIZED FOR INSTALLATION OF DRIVE TUBE FOUNDATION. WHEN USING A POWER DRIVER, A SHANK SHALL ALSO BE REQUIRED.

SPECIFICATION REFERENCE	A COPY OF THE ORIGINAL SEALED AND SIGNED DRAWING IS ON FILE IN THE CENTRAL OFFICE.	VDOT ROAD AND BRIDGE STANDARDS	
700	SQUARE TUBE SIGN POST FOUNDATION TYPE F DETAILS VIRGINIA DEPARTMENT OF TRANSPORTATION	REVISION DATE NEW 01/15	SHEET 9 OF 12 1321.18

STP-1

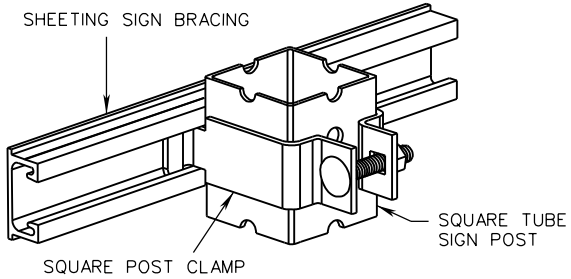

SQUARE POST CLAMP & BRACE
(CONNECTING JUNCTION)

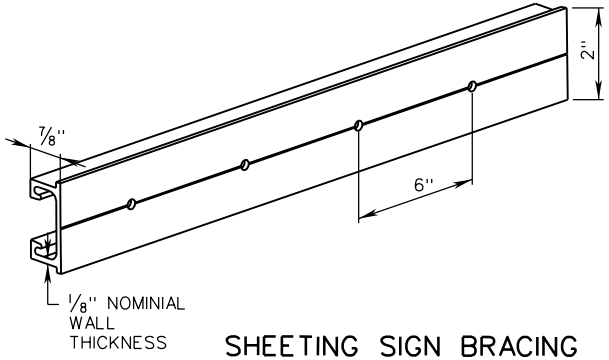

ALUMINUM SIGN BRACING 2" MOUNTING SURFACE x 7/8" DEPTH x 1/8" NOMINAL WALL THICKNESS

6061-T6 ALUMINUM ALLOY, PUNCHED WITH 3/16" DIAMETER HOLES ON 6" CENTERS FOR ATTCHMENT OF SIGN SUBSTRATE USING SIGN PANEL 3/16" DRIVE RIVETS, OR 3/8" DIAMETER HOLES ON 12" CENTERS WHEN USING 3/8" DRIVE RIVETS.

SHEETING SIGN BRACING

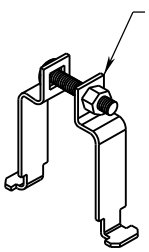

11 GAUGE, TYPE 304, #2B FINISHED STAINLESS STEEL WITH STAINLESS STEEL CARRIAGE BOLT

CLAMPS CAN BE TWIST LOCKED INTO PLACE WITHOUT SLIDING THE CLAMPS FROM AN OPEN END OF THE CHANNEL BRACE

CLAMP IS TO BE SIZED TO FIT THE SQUARE TUBE POST, 2" OR 2 1/2"

SQUARE POST CLAMP DETAIL

NOTES:

1. SEE SHEET 12 OF 12 FOR SIGN PANEL ATTACHMENT DETAILS.

A COPY OF THE ORIGINAL SEALED AND SIGNED DRAWING IS ON FILE IN THE CENTRAL OFFICE.

VDOT ROAD AND BRIDGE STANDARDS	SQUARE TUBE SIGN POST SIGN BRACING DETAILS VIRGINIA DEPARTMENT OF TRANSPORTATION	SPECIFICATION REFERENCE
SHEET 10 OF 12	REVISION DATE 08/17	700
1321.19		

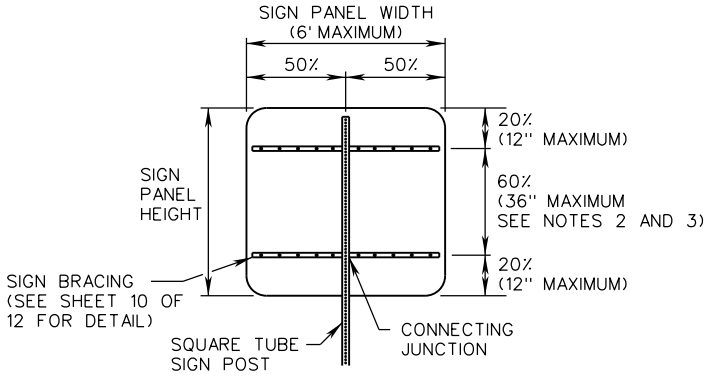

SINGLE POST - BRACING DIAGRAM
TYPICAL - TWO BRACE

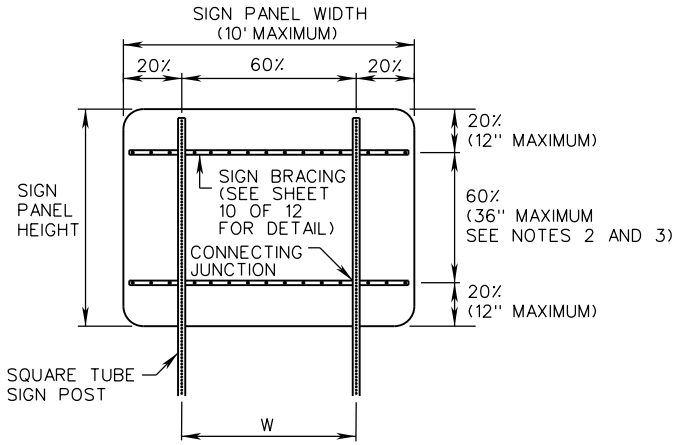

TWO POST - BRACING DIAGRAM
TYPICAL - TWO BRACE

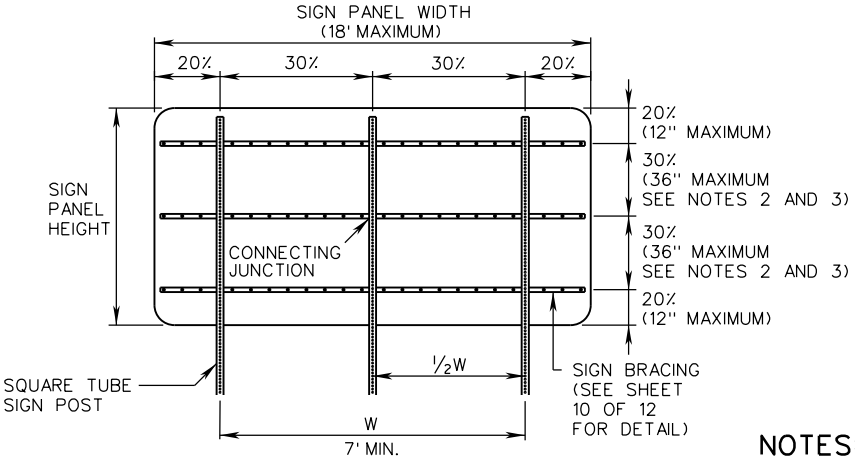

THREE POST - BRACING DIAGRAM
TYPICAL - THREE BRACE

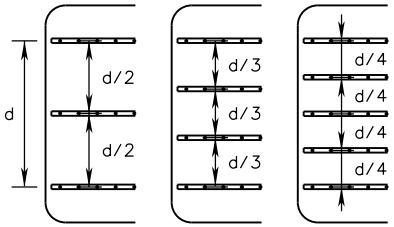

DETAIL A - SPACING OF MULTIPLE BRACING

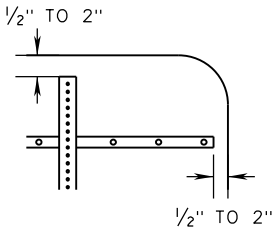

DETAIL B - INSTALLATION TOLERANCES

NOTES:

1. SIGN PANEL WIDTHS 36" OR GREATER SHALL REQUIRE SIGN BRACING.
2. VERTICAL SPACING OF SIGN BRACING SHALL NOT EXCEED 12" FROM THE TOP OR BOTTOM EDGE OF SIGN PANEL TO FIRST BRACE AND 36" BETWEEN BRACES. IF THE SPACING BETWEEN BRACES EXCEEDS 36" THEN ADDITIONAL SIGN BRACING SHALL BE ADDED. ALL SIGN BRACING SHALL BE EQUALLY SPACED BETWEEN THE TOP AND BOTTOM BRACE. SEE DETAIL A.
3. MAXIMUM SIGN PANEL AREA PER POST TO BRACE JUNCTION SHALL BE 10 SQ. FT. ADDITIONAL SIGN BRACING SHALL BE INSTALLED IF 10 SQ. FT PER POST TO BRACE JUNCTION IS EXCEEDED.
4. ONE SPLICE PER BRACE WILL BE PERMITTED. BRACE SPLICE SHALL BE IN ACCORDANCE WITH THE MANUFACTURER'S RECOMMENDATIONS. BRACING SHALL NOT BE SPLICED WITHIN 6" OF A BRACE TO POST JUNCTION. SPLICES SHALL NOT BE IN VERTICAL ALIGNMENT BUT SHALL BE OFFSET NO LESS THAN 12" FROM EACH OTHER.
5. TOP OF SIGN PANEL SHALL BE MOUNTED ½" TO 2" WITH THE TOP OF THE POST AND ½" TO 2" WITH THE SIDE OF THE SIGN BRACING. SEE DETAIL B.
6. SIGN PANEL WIDTHS SHALL NOT EXCEED MAXIMUM SPECIFIED.

SPECIFICATION REFERENCE	A COPY OF THE ORIGINAL SEALED AND SIGNED DRAWING IS ON FILE IN THE CENTRAL OFFICE.	VDOT ROAD AND BRIDGE STANDARDS	
700	SQUARE TUBE SIGN POST SIGN BRACING DETAILS VIRGINIA DEPARTMENT OF TRANSPORTATION	REVISION DATE 08/17	SHEET 11 OF 12 1321.20

STP-1

SIGN POSTS NOT REQUIRING BRACING

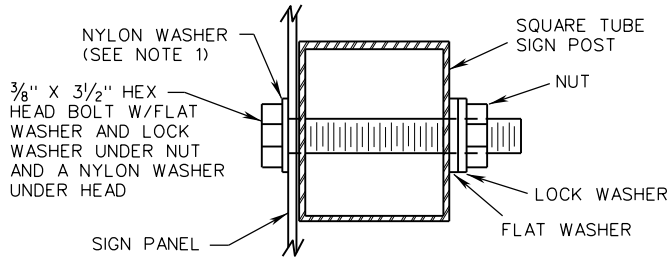

SINGLE SIGN PANEL DETAIL

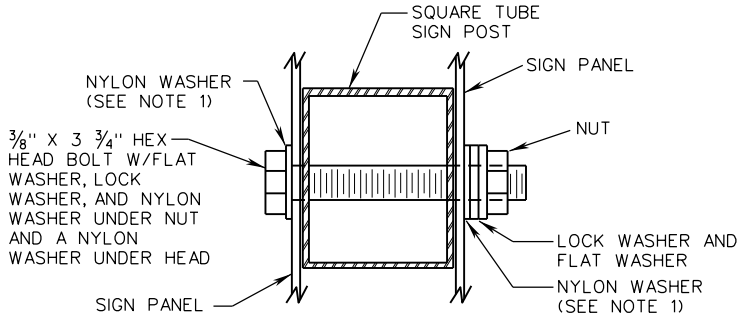

BACK-TO-BACK SIGN PANEL DETAIL

NOTES:

1. NYLON WASHER SHALL BE 1/16" THICK MINIMUM WITH AN OUTSIDE DIAMETER OF 1" AND AN INSIDE DIAMETER OF 7/16".
2. DRIVE RIVET SHALL BE 3/16" OR 3/8" ALUMINUM FLAT HEAD RIVET WITH STEEL PINS AND NYLON OR RUBBER WASHER.
3. THE HEADS OF ALL DRIVE RIVETS AND HEX HEAD BOLTS SHALL BE POWDER COATED TO MATCH THE COLOR OF THE SIGN SHEETING.
4. DRIVE RIVET SHALL NOT BE USED FOR SIGNS WITHOUT BRACING.

SIGN POSTS REQUIRING BRACING

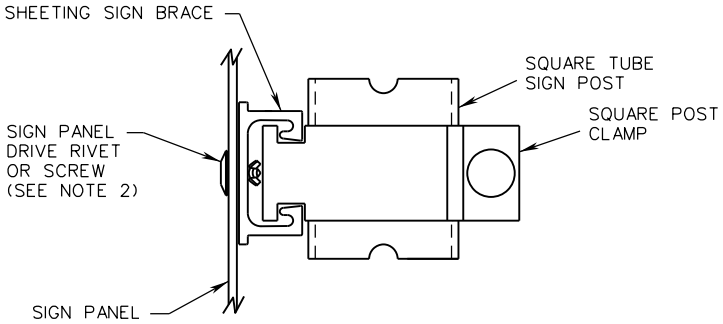

SINGLE SIGN PANEL DETAIL

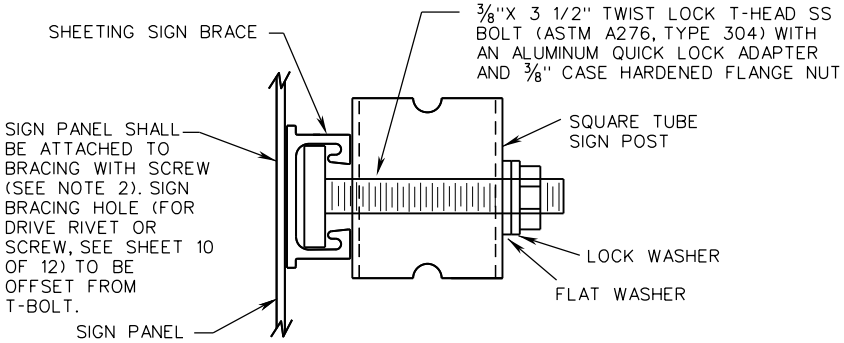

SINGLE SIGN PANEL ALTERNATE METHOD DETAIL

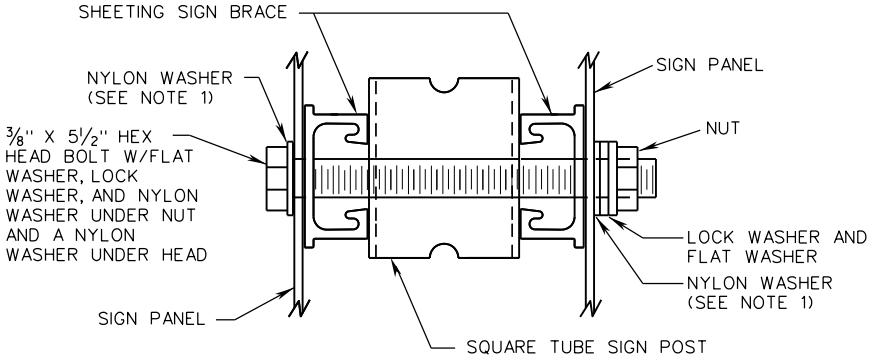

BACK-TO-BACK SIGN PANEL DETAIL

VDOT
ROAD AND BRIDGE STANDARDS

SHEET 12 OF 12
1321.21

REVISION DATE
08/17

A COPY OF THE ORIGINAL SEALED AND SIGNED DRAWING IS ON FILE IN THE CENTRAL OFFICE.

SQUARE TUBE SIGN POST

SIGN PANEL ATTACHMENT DETAILS

VIRGINIA DEPARTMENT OF TRANSPORTATION

SPECIFICATION REFERENCE
700

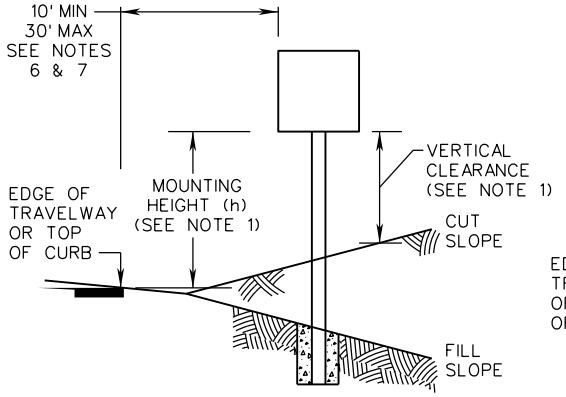

SINGLE POST
INSTALLATIONS

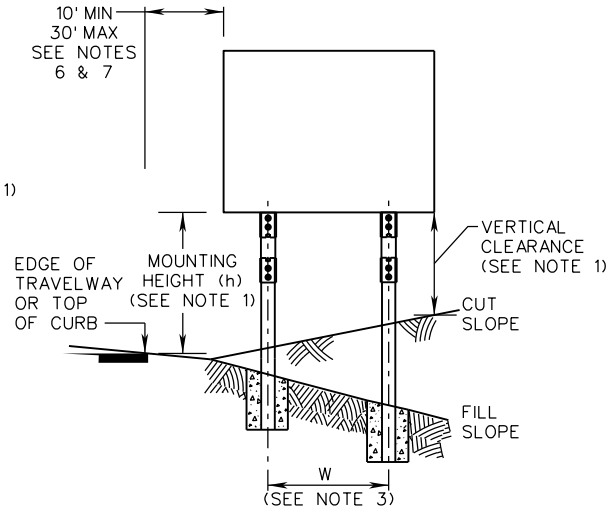

TWO POST
INSTALLATIONS
(SEE NOTE 10)

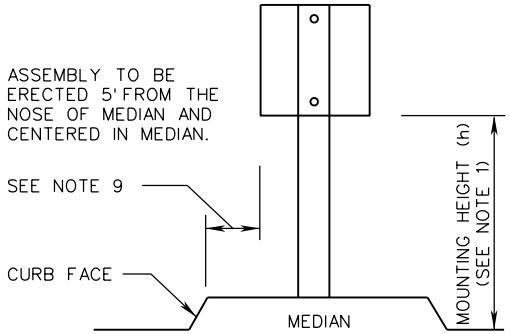

SINGLE POST
MEDIAN INSTALLATIONS

MINIMUM MOUNTING HEIGHT (h) (SEE NOTE 1)			
SIGN TYPES	FREEWAYS, EXPRESSWAYS, AND FULL CONTROL ACCESS HIGHWAYS	OTHER HIGHWAYS	
		RURAL AREAS	NON-RURAL AREAS
PRIMARY	7'	5'	7'
SECONDARY SIGNS (SEE NOTE 2)	5'	4'	7'

NOTES:

1. FOR ALL SIGNS:
   A. MINIMUM MOUNTING HEIGHT (h) SHALL BE IN ACCORDANCE WITH THE "MINIMUM MOUNTING HEIGHT" TABLE ON THIS SHEET. MOUNTING HEIGHT IS MEASURED FROM THE ROADWAY ELEVATION AT THE EDGE OF THE TRAVEL WAY TO THE BOTTOM OF THE SIGN PANEL.
   B. MAXIMUM MOUNTING HEIGHT (h) FOR THE BOTTOM-MOST SIGN PANEL(S) SHALL BE 8 FEET, EXCEPT WHEN NECESSARY TO ACHIEVE MINIMUM VERTICAL CLEARANCE BENEATH SIGN PANEL AS PER NOTE 1C.
   C. MINIMUM VERTICAL CLEARANCE (DISTANCE BETWEEN BOTTOM OF SIGN PANEL AND FINISHED GRADE BENEATH THE PANEL) SHALL BE 7 FEET FOR ANY PORTION OF THE SIGN WITHIN THE CLEAR ZONE. THIS MINIMUM VERTICAL CLEARANCE MAY BE REDUCED TO 5 FEET FOR EITHER OF THE FOLLOWING CONDITIONS:
      - WHEN SIGNS OR PORTIONS OF SIGNS ARE LOCATED MORE THAN 10 FEET UP A CUT SLOPE GREATER THAN 3:1, OR
      - WHEN THE SIGN IS LOCATED AT LEAST THE MINIMUM DISTANCE BEHIND CURB, BARRIER, OR GUARDRAIL AS PER NOTES 6 AND 7.

2. A SECONDARY SIGN IS CONSIDERED TO BE A SIGN MOUNTED BELOW ANOTHER SIGN, EXCEPT A ROUTE MARKER WITH AN AUXILIARY PLATE IS CONSIDERED TO BE A SINGLE SIGN. A SECONDARY SIGN SHALL NOT BE MOUNTED LOWER THAN 7 FEET ABOVE A PEDESTRIAN SIDEWALK OR PATHWAY IF IT WILL PROJECT INTO THE PEDESTRIAN FACILITY.

3. W = (0.60) X (SIGN PANEL WIDTH)

4. FOUR INCH SQUARE TUBE SIGN POST SHALL REQUIRE AN FHWA APPROVED BREAKAWAY SUPPORT SYSTEM CONFORMING TO MASH TESTING REQUIREMENTS FOR STRUCTURAL SUPPORTS FOR HIGHWAY SIGNS, LUMINIARIES AND TRAFFIC SIGNALS.

5. FOR SIGNS LOCATED IN AREAS WHERE PEDESTRIAN MOVEMENTS ARE LIKELY TO OCCUR OR ON-STREET PARKING IS PERMITTED, THE HEIGHT FROM THE LOWEST PORTION OF THE SIGN PANEL TO THE FINISHED SURFACE SHALL HAVE A MINIMUM CLEARANCE OF 7 FEET.

6. THE LATERAL CLEARANCE TO THE SIGN PANEL SHALL BE A MINIMUM OF 2 FEET FROM THE FACE OF CURB OR 4 FEET FROM FACE OF BARRIER, IF PRESENT.

7. UNLESS OTHERWISE APPROVED BY THE ENGINEER, SIGNS PLACED BEHIND GUARDRAIL SHALL BE LOCATED SUCH THAT THE NEAR SIDE EDGE OF THE SIGN PANEL IS OUTSIDE OF THE GUARDRAIL DEFLECTION DISTANCE.

8. FOR SIGNS AT INTERCHANGE EXIT RAMPS, REFER TO STANDARD ISD-1.

9. 2' MINIMUM FOR MEDIANS OVER 10' IN WIDTH. 12" MINIMUM FOR MEDIANS 10' OR LESS IN WIDTH UNLESS SHOWN OTHERWISE IN THE CONTRACT DOCUMENTS.

10. THE SIGN SHALL NOT BE INSTALLED UNTIL THE POST AND HINGE ASSEMBLY HAVE BEEN INSTALLED.

SPECIFICATION REFERENCE	A COPY OF THE ORIGINAL SEALED AND SIGNED DRAWING IS ON FILE IN THE CENTRAL OFFICE.	VDOT ROAD AND BRIDGE STANDARDS	
700	FOUR INCH SQUARE TUBE SIGN POST MASH APPROVED DESIGN VIRGINIA DEPARTMENT OF TRANSPORTATION	REVISION DATE NEW 08/19	SHEET 1 OF 12 1321.40

STP-2

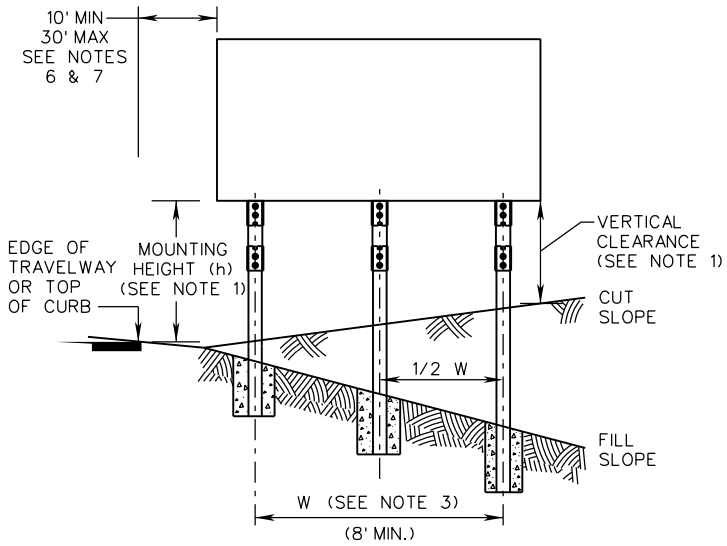

THREE POST INSTALLATIONS
(SEE NOTE 10)

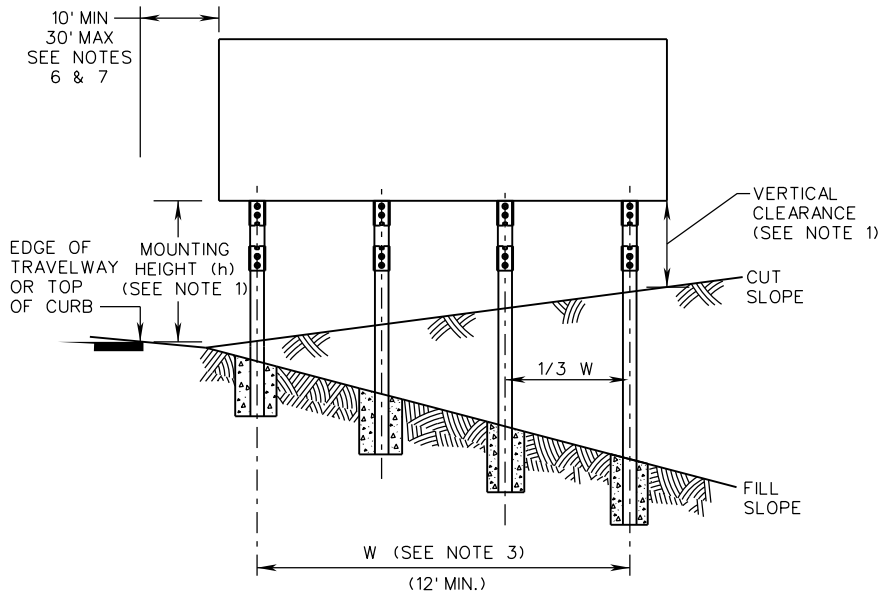

FOUR POST INSTALLATIONS
(SEE NOTE 10)

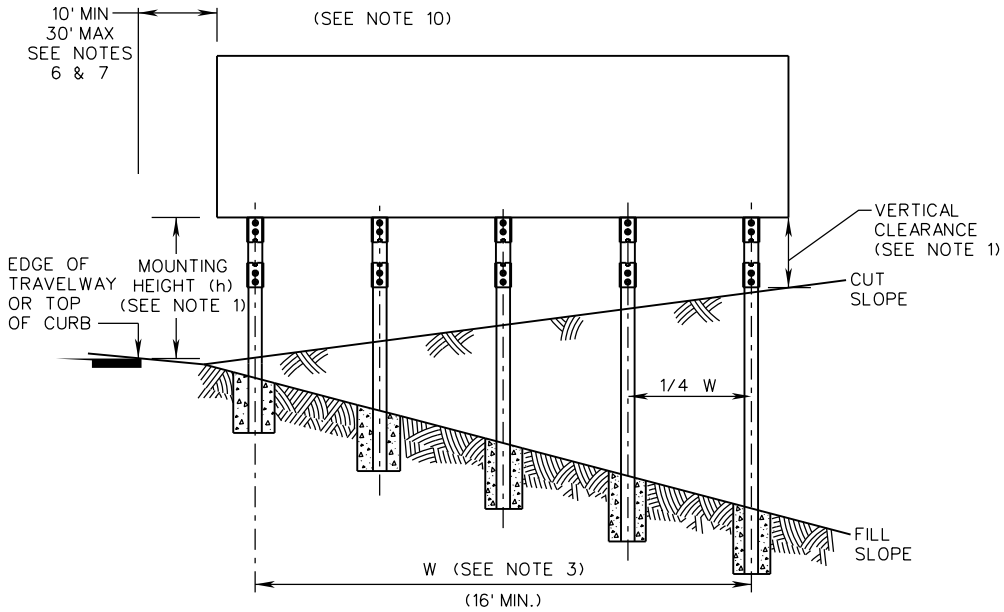

FIVE POST INSTALLATIONS
(SEE NOTE 10)

NOTES:

1. SEE SHEET 1321.40 (SHEET 1 OF 2) FOR ALL NOTES AND DETAILS NOT SHOWN.

VDOT
ROAD AND BRIDGE STANDARDS

SHEET 2 OF 12
1321.41

REVISION DATE
NEW 08/19

A COPY OF THE ORIGINAL SEALED AND SIGNED DRAWING IS ON FILE IN THE CENTRAL OFFICE.

FOUR INCH SQUARE TUBE SIGN POST

MASH APPROVED DESIGN

VIRGINIA DEPARTMENT OF TRANSPORTATION

SPECIFICATION REFERENCE
700

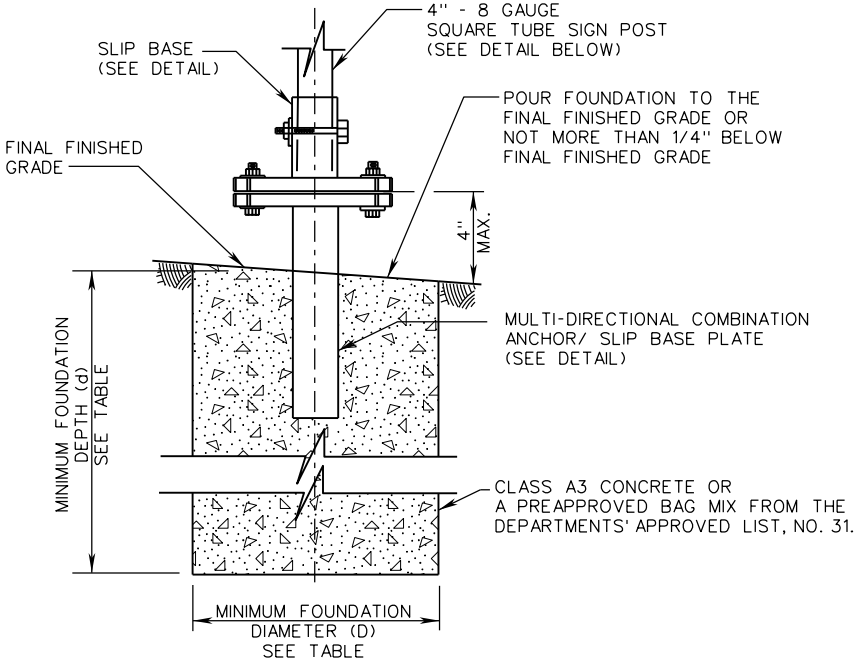

FOUNDATION

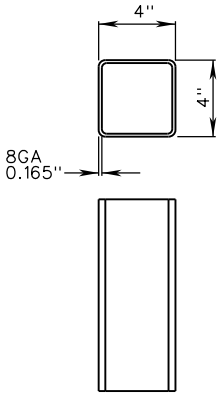

STEEL SHALL CONFORM TO ASTM A1011 GRADE 50 AND MUST BE WELDED AND SCARFED OUTSIDE AFTER WELDING AND THEN ZINC FLO-COAT GALVANIZED ON BOTH THE INTERIOR AND EXTERIOR AFTER SCARFING. STEEL SHALL BE COATED WITH A CROMATE CONVERSION COATING & CLEAR ORGANIC POLYMER TOPCOAT.

SIGN POST

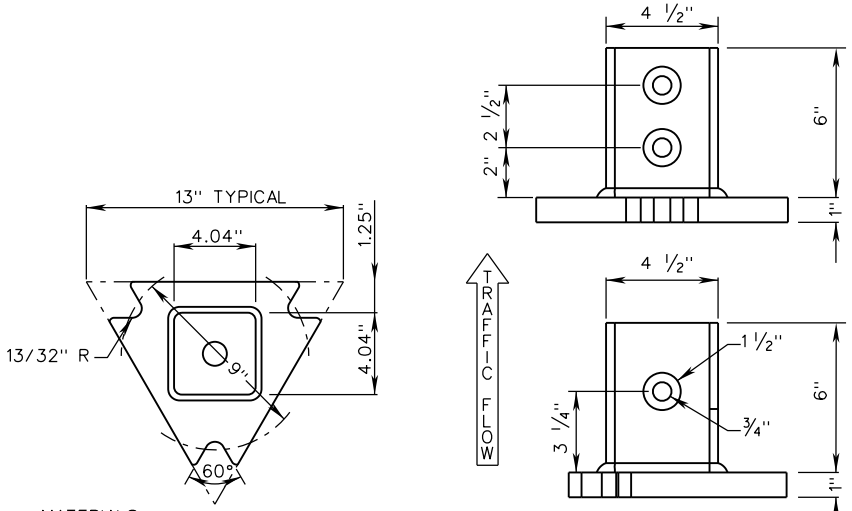

MATERIALS:
4 1/2" X 4 1/2" X 7 GAUGE ASTM A500 GRADE B TUBE
1" THICK ASTM A572 GRADE 50 PLATE STEEL
GALVANIZE PER ASTM A153
ALL WELDS TO BE 1/4" X 3/8" FILLET TYPE

MULTI-DIRECTIONAL COMBINATION SLIP BASE PLATE

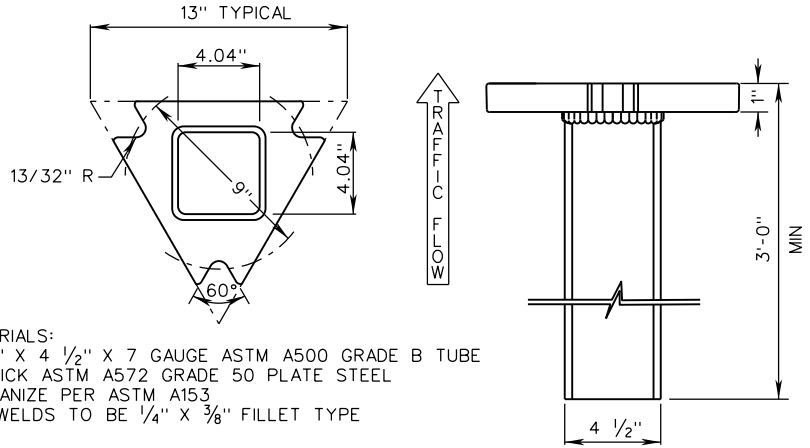

MATERIALS:
4 1/2" X 4 1/2" X 7 GAUGE ASTM A500 GRADE B TUBE
1" THICK ASTM A572 GRADE 50 PLATE STEEL
GALVANIZE PER ASTM A153
ALL WELDS TO BE 1/4" X 3/8" FILLET TYPE

MULTI-DIRECTIONAL COMBINATION ANCHOR BASE PLATE

SPECIFICATION REFERENCE	A COPY OF THE ORIGINAL SEALED AND SIGNED DRAWING IS ON FILE IN THE CENTRAL OFFICE.	VDOT ROAD AND BRIDGE STANDARDS	
700	FOUR INCH SQUARE TUBE SIGN POST POST AND FOUNDATION DETAILS VIRGINIA DEPARTMENT OF TRANSPORTATION	REVISION DATE NEW 08/19	SHEET 3 OF 12 1321.42

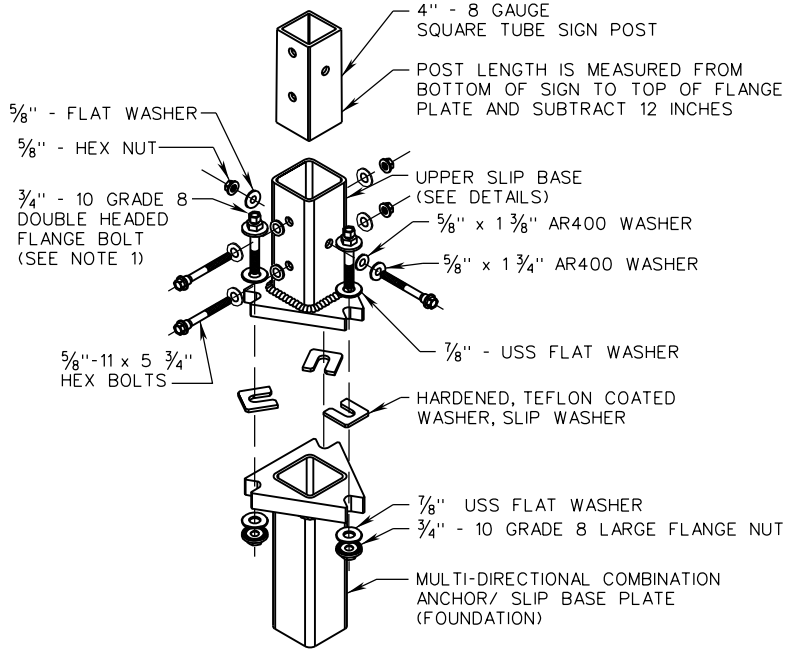

SLIP BASE BREAKAWAY DETAIL

NOTES:

1. INSTALL PER MANUFACTURERS INSTRUCTIONS.
2. POST BOLTS SHALL BE TORQUED TO 100 FT-LBS.

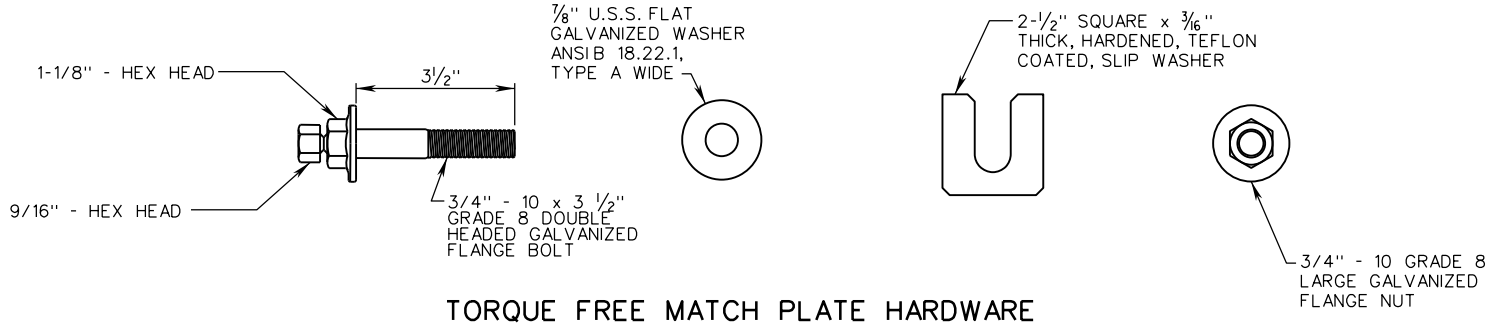

TORQUE FREE MATCH PLATE HARDWARE

VDOT ROAD AND BRIDGE STANDARDS	A COPY OF THE ORIGINAL SEALED AND SIGNED DRAWING IS ON FILE IN THE CENTRAL OFFICE. FOUR INCH SQUARE TUBE SIGN POST SLIP BASE DETAILS VIRGINIA DEPARTMENT OF TRANSPORTATION		SPECIFICATION REFERENCE
SHEET 4 OF 12		REVISION DATE	700
1321.43		NEW 08/19	

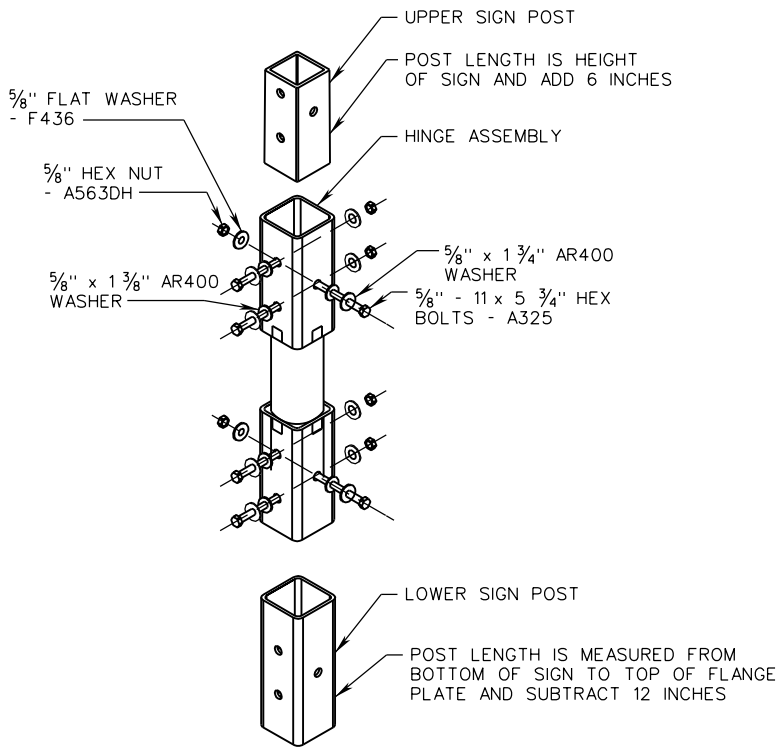

HINGE INSTALLATION DETAIL

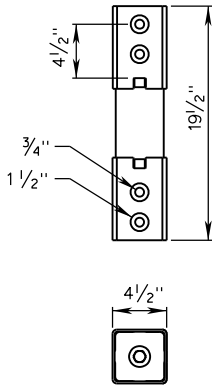

HINGE ASSEMBLY

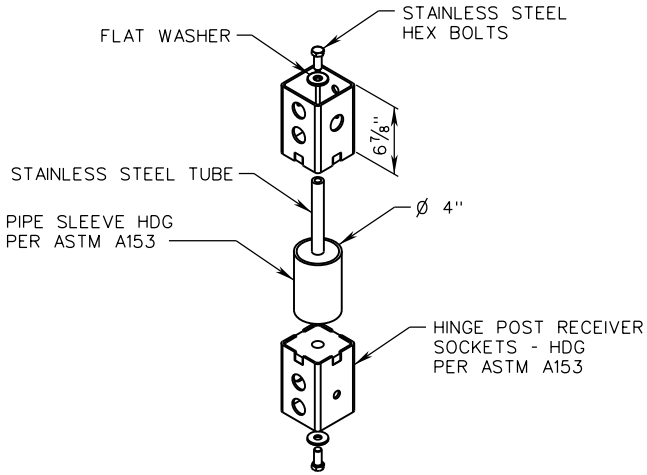

HINGE ASSEMBLY DETAIL

NOTES:

1. HINGE ASSEMBLY SHALL BE USED FOR MULTI-POST INSTALLATIONS ONLY.
2. HINGE ASSEMBLY BOLTS SHALL BE TORQUED TO 100 FT-LBS.
3. INSTALL PER MANUFACTURER'S INSTRUCTIONS.

SPECIFICATION REFERENCE	A COPY OF THE ORIGINAL SEALED AND SIGNED DRAWING IS ON FILE IN THE CENTRAL OFFICE.	VDOT ROAD AND BRIDGE STANDARDS	
700	FOUR INCH SQUARE TUBE SIGN POST HINGE ASSEMBLY DETAILS VIRGINIA DEPARTMENT OF TRANSPORTATION	REVISION DATE NEW 08/19	SHEET 5 OF 12 1321.44

STP-2

TABLE 1 - FOUNDATION AND MAXIMUM SIGN SIZES FOR HAMPTON ROADS DISTRICT

1 POST								
MAX CENTROID (FT)	SIGN AREA							
	20 SF	25 SF	30 SF	35 SF	40 SF	45 SF	50 SF	55 SF
10	2'-0"x7'-0"	2'-0"x7'-6"	2'-0"x7'-6"	2'-0"x8'-0"	2'-6"x9'-0"	2'-6"x9'-0"	2'-6"x9'-6"	2'-6"x9'-6"
11			2'-0"x8'-0"	2'-6"x8'-6"				SEE 2 POST TABLE
12				2'-6"x8'-6"				
13		2'-0"x8'-0"	2'-6"x8'-6"		2'-6"x9'-6"	2'-6"x9'-6"		
14	2'-0"x7'-6"							
15								
16								
17		2'-0"x8'-6"						
18								

2 POST								
MAX CENTROID (FT)	SIGN AREA							
	35 SF	40 SF	45 SF	50 SF	55 SF	60 SF	65 SF	70 SF
10	SEE 1 POST TABLE					2'-0"x7'-6"	2'-0"x8'-0"	2'-0"x8'-0"
11					2'-0"x8'-0"	2'-0"x8'-0"	2'-0"x8'-6"	2'-6"x8'-0"
12								
13				2'-0"x8'-0"	2'-6"x8'-0"	2'-6"x8'-0"	2'-6"x8'-6"	2'-6"x8'-6"
14			2'-0"x8'-0"					
15								
16		2'-0"x7'-6"				SEE 3 POST TABLE		
17	2'-0"x7'-6"		2'-0"x8'-6"	2'-0"x8'-6"	2'-6"x8'-6"			
18								

3 POST						
MAX CENTROID (FT)	SIGN AREA					
	60 SF	65 SF	70 SF	80 SF	90 SF	100 SF
10	SEE 2 POST TABLE			2'-0"x7'-6"	2'-0"x7'-6"	2'-0"x8'-0"
11				2'-0"x8'-0"	2'-0"x8'-0"	2'-0"x8'-6"
12						
13				2'-6"x8'-0"	2'-6"x8'-0"	2'-6"x8'-6"
14						
15						
16	2'-0"x7'-6"	2'-0"x8'-6"	2'-0"x8'-6"			
17				2'-6"x8'-6"	2'-6"x8'-6"	SEE 4 POST TABLE
18						

4 POST				
MAX CENTROID (FT)	SIGN AREA			
	100 SF	120 SF	125 SF	130 SF
10	SEE 3 POST TABLE	2'-0"x7'-6"	2'-0"x8'-0"	2'-0"x8'-0"
11		2'-0"x8'-0"	2'-0"x8'-6"	2'-0"x8'-6"
12				
13		2'-6"x8'-0"	2'-6"x8'-6"	2'-6"x8'-6"
14				
15				
16				
17	2'-0"x8'-6"	2'-6"x8'-6"	2'-6"x9'-0"	SEE 5 POST TABLE
18				

5 POST						
MAX CENTROID (FT)	SIGN AREA					
	125 SF	130 SF	140 SF	150 SF	160 SF	170 SF
10	SEE 4 POST TABLE		2'-0"x7'-6"	2'-0"x7'-6"	2'-0"x8'-0"	2'-0"x8'-0"
11			2'-0"x8'-0"	2'-0"x8'-0"	2'-0"x8'-6"	2'-0"x8'-6"
12						
13			2'-6"x8'-0"	2'-6"x8'-0"	2'-6"x8'-6"	2'-6"x8'-6"
14						
15						
16						
17		2'-6"x8'-6"	2'-6"x8'-6"	2'-6"x8'-6"	2'-6"x9'-0"	2'-6"x9'-0"
18	2'-0"x8'-6"					

NOTES:

1. CENTROID SHALL BE DETERMINED IN ACCORDANCE WITH PCS-1.
2. FOLLOW SIGN BRACING DETAILS (SEE SHEETS 10 & 11 OF 12) FOR MAXIMUM SIGN PANEL WIDTHS AND SIGN BRACING SPACING.
3. TABLE 1 SHALL BE USED FOR THE HAMPTON ROADS DISTRICT, EXCEPT THE CITY OF EMPORIA AND COUNTIES OF GREENSVILLE, SUSSEX, AND SOUTHAMPTON SHALL USE TABLE 2.
4. FOR FOUNDATION TYPES AND REINFORCEMENT SEE SHEET 8 OF 12.
5. FOUNDATION SIZES BASED ON TYPICAL SOILS AND L-PILE 2016 ANALYSIS.
6. SEE SHEETS 1 & 2 OF 12 FOR POST SPACING REQUIREMENTS.
7. DO NOT EXCEED MAX CENTROID HEIGHT OR CORRESPONDING SIGN AREA.

A COPY OF THE ORIGINAL SEALED AND SIGNED DRAWING IS ON FILE IN THE CENTRAL OFFICE.

FOUR INCH SQUARE TUBE SIGN POST

FOUNDATION SIZES

VIRGINIA DEPARTMENT OF TRANSPORTATION

SPECIFICATION REFERENCE

700

TABLE 2 - FOUNDATION AND MAXIMUM SIGN SIZES FOR BRISTOL, SALEM, LYNCHBURG, RICHMOND, FREDERICKSBURG, CULPEPER, STAUTON, AND NORTHERN VIRGINIA DISTRICTS

1 POST							
MAX CENTROID (FT)	SIGN AREA						
	35 SF	40 SF	45 SF	50 SF	60 SF	65 SF	70 SF
10	2'-0"x6'-0"	2'-6"x5'-6"	2'-6"x5'-6"	2'-6"x6'-6"	2'-6"x7'-0"	2'-6"x7'-0"	3'-0"x6'-0"
11	2'-0"x6'-0"	2'-6"x6'-6"	2'-6"x6'-6"				
12							
13							
14	2'-6"x6'-0"						
15							3'-0"x6'-6"
16				2'-6"x7'-0"		SEE 2 POST TABLE	
17	2'-6"x6'-6"						
18	2'-6"x7'-0"	2'-6"x7'-0"	2'-6"x7'-0"				

2 POST				
MAX CENTROID (FT)	SIGN AREA			
	65 SF	70 SF	80 SF	85 SF
10	SEE 1 POST TABLE		2'-6"x5'-6"	2'-6"x5'-6"
11			2'-6"x6'-6"	2'-6"x6'-6"
12				
13				
14				
15				
16	2'-6"x6'-0"	2'-6"x6'-0"		
17	2'-6"x6'-6"	2'-6"x6'-6"		
18	2'-6"x7'-0"	2'-6"x7'-0"	2'-6"x7'-0"	2'-6"x7'-0"

3 POST						
MAX CENTROID (FT)	SIGN AREA					
	90 SF	100 SF	110 SF	120 SF	130 SF	140 SF
10	2'-0"x6'-0"	2'-0"x6'-0"	2'-6"x5'-6"	2'-6"x5'-6"	2'-6"x5'-6"	2'-6"x6'-6"
11			2'-6"x6'-0"	2'-6"x6'-6"	2'-6"x6'-6"	
12						
13						
14	2'-6"x5'-6"	2'-6"x6'-0"				
15						
16						2'-6"x7'-0"
17	2'-6"x6'-6"	2'-6"x6'-6"	2'-6"x6'-6"			
18	3'-0"x6'-0"	2'-6"x7'-0"	2'-6"x7'-0"	2'-6"x7'-0"	2'-6"x7'-0"	

4 POST					
MAX CENTROID (FT)	SIGN AREA				
	150 SF	160 SF	170 SF	175 SF	185 SF
10	2'-6"x5'-6"	2'-6"x5'-6"	2'-6"x5'-6"	2'-6"x5'-6"	2'-6"x6'-6"
11	2'-6"x6'-6"	2'-6"x6'-6"	2'-6"x6'-6"	2'-6"x6'-6"	
12					
13					
14					
15					
16					2'-6"x7'-0"
17					
18	2'-6"x7'-0"	2'-6"x7'-0"	2'-6"x7'-0"	2'-6"x7'-0"	

5 POST			
MAX CENTROID (FT)	SIGN AREA		
	190 SF	195 SF	200 SF
10	2'-6"x5'-6"	2'-6"x5'-6"	2'-6"x5'-6"
11	2'-6"x6'-6"	2'-6"x6'-6"	2'-6"x6'-6"
12			
13			
14			
15			
16			
17			
18	2'-6"x7'-0"	2'-6"x7'-0"	2'-6"x7'-0"

NOTES:

1. CENTROID SHALL BE DETERMINED IN ACCORDANCE WITH PCS-1.
2. FOLLOW SIGN BRACING DETAILS (SEE SHEETS 10 & 11 OF 12) FOR MAXIMUM SIGN PANEL WIDTHS AND SIGN BRACING SPACING.
3. TABLE 2 SHALL ALSO BE USED FOR THE CITY OF EMPORIA AND COUNTIES OF GREENSVILLE, SUSSEX, AND SOUTHAMPTON IN HAMPTON ROADS DISTRICT.
4. FOR FOUNDATION TYPES AND REINFORCEMENT SEE SHEET 8 OF 12.
5. FOUNDATION SIZES BASED ON TYPICAL SOILS AND L-PILE 2016 ANALYSIS.
6. SEE SHEET 1 & 2 OF 12 FOR POST SPACING REQUIREMENTS.
7. DO NOT EXCEED MAX CENTROID HEIGHT OR CORRESPONDING SIGN AREA.

FOUNDATION TYPES

STP-2 FOUNDATION TYPE			OPTION A						OPTION B	
			BAR P			BAR H			WELDED WIRE MESH	
	DIA. (D)	DEPTH (d)	LENGTH	BAR SIZE	NO.	BAR SIZE	NO.	LENGTH	LENGTH	SQ. FT.
A	2'-0"	6'-0"	5'-6"	#5	8	#4	7	6'-0"	5'-6"	33
B	2'-0"	7'-0"	6'-6"	#6	8	#4	8	6'-0"	6'-6"	40
C	2'-0"	7'-6"	7'-0"	#7	8	#4	8	6'-0"	7'-0"	42
D	2'-0"	8'-0"	7'-6"	#7	8	#4	9	6'-0"	7'-6"	45
E	2'-0"	8'-6"	8'-0"	#7	8	#4	10	6'-0"	8'-0"	48
F	2'-6"	5'-6"	5'-0"	#5	8	#4	6	7'-7"	5-0"	37
G	2'-6"	6'-0"	5'-6"	#5	8	#4	7	7-7"	5'-6"	40
H	2'-6"	6'-6"	6'-0"	#6	8	#4	7	7'-7"	6'-0"	44
I	2'-6"	7'-0"	6'-6"	#6	8	#4	8	7'-7"	6'-6"	47
J	2'-6"	8'-0"	7'-6"	#6	8	#4	9	7'-7"	7'-6"	57
K	2'-6"	8'-6"	8'-0"	#7	8	#4	10	7'-7"	8'-0"	61
L	2'-6"	9'-0"	8'-6"	#7	8	#4	10	7'-7"	8'-6"	65
M	2'-6"	9'-6"	9'-0"	#7	8	#4	10	7'-7"	9'-0"	68
N	3'-0"	6'-0"	5'-6"	#5	8	#4	8	9'-0"	5'-6"	50
O	3'-0"	6'-6"	6'-0"	#6	8	#4	7	9'-0"	6'-0"	54

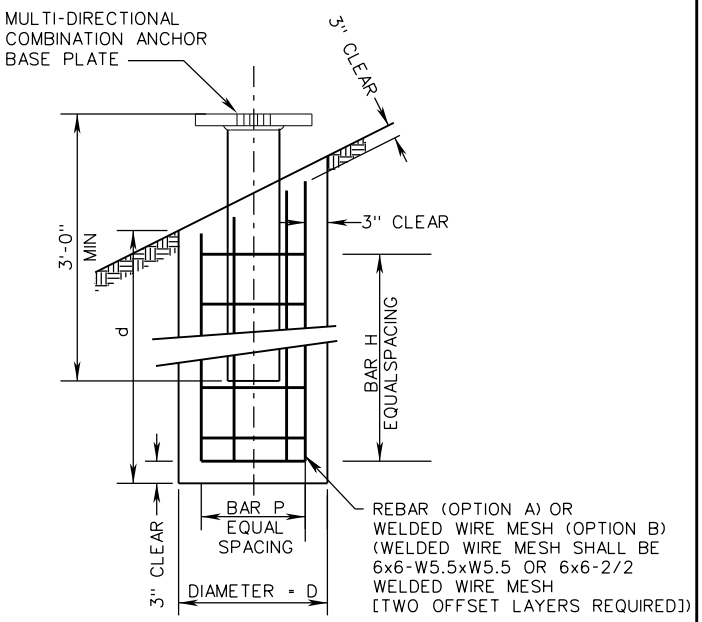

ELEVATION

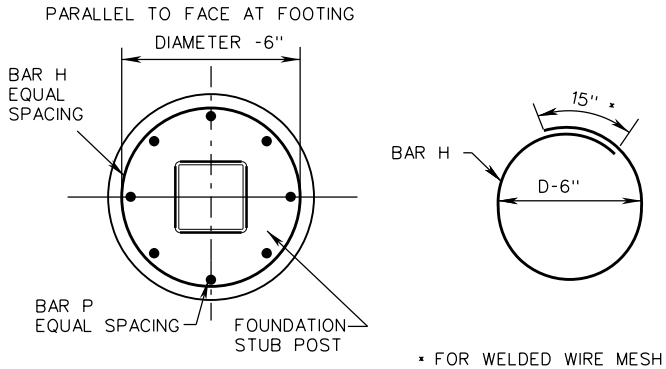

* FOR WELDED WIRE MESH
LAP SHALL BE 9"

PLAN

NOTES:

1. FOR FOUNDATION SIZES SEE TABLE 1 (SHEET 6 OF 12) AND TABLE 2 (SHEET 7 OF 12).

A COPY OF THE ORIGINAL SEALED AND SIGNED DRAWING IS ON FILE IN THE CENTRAL OFFICE.

FOUR INCH SQUARE TUBE SIGN POST

FOUNDATION TYPES AND REINFORCEMENT

VIRGINIA DEPARTMENT OF TRANSPORTATION

SPECIFICATION REFERENCE
700

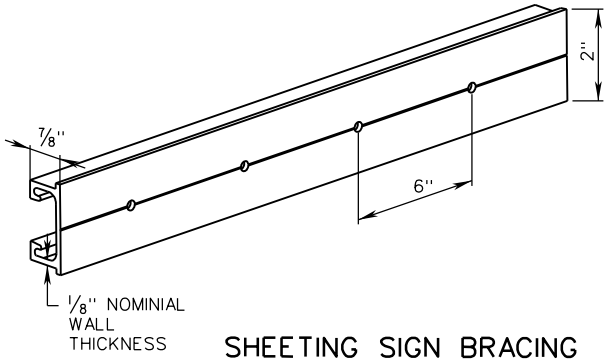

ALUMINUM SIGN BRACING 2" MOUNTING SURFACE x 7/8" DEPTH x 1/8" NOMINAL WALL THICKNESS

6061-T6 ALUMINUM ALLOY, PUNCHED WITH 3/16" DIAMETER HOLES ON 6" CENTERS FOR ATTACHMENT OF SIGN SUBSTRATE USING SIGN PANEL 3/16" DRIVE RIVETS, OR 3/8" DIAMETER HOLES ON 12" CENTERS WHEN USING 3/8" DRIVE RIVETS.

SHEETING SIGN BRACING

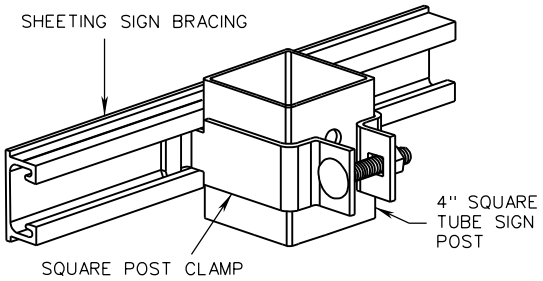

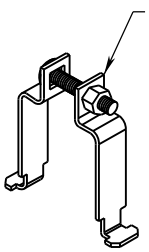

11 GAUGE, TYPE 304, #2B FINISHED STAINLESS STEEL WITH STAINLESS STEEL CARRIAGE BOLT

CLAMPS CAN BE TWIST LOCKED INTO PLACE WITHOUT SLIDING THE CLAMPS FROM AN OPEN END OF THE CHANNEL BRACE

CLAMP IS TO BE SIZED TO FIT THE 4" SQUARE TUBE POST

SQUARE POST CLAMP DETAIL (METHOD A)

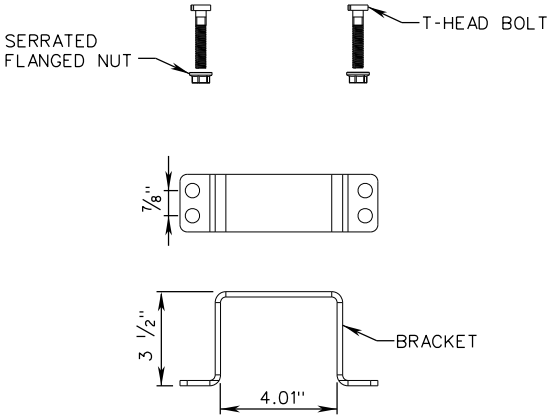

MATERIALS:

2" WIDE x 3/16" BRACKET. TYPE 304, #2B FINISHED STAINLESS STEEL BRACKET.

STAINLESS STEEL 3/4" - 16 x 2" T-HEAD BOLTS AND SERRATED FLANGE NUTS

ONE CLAMP REQUIRED FOR EACH BRACE TO POST JUNCTION.

SQUARE POST CLAMP DETAIL (METHOD B)

NOTES:

1. SEE SHEET 12 OF 12 FOR SIGN PANEL ATTACHMENT DETAILS.
2. ONE CLAMP REQUIRED FOR EACH BRACE-TO-POST JUNCTION.
3. STANDARD SPD-2 SIGNS WILL BE PERMITTED FOR STP-2 STRUCTURES.

SPECIFICATION REFERENCE	A COPY OF THE ORIGINAL SEALED AND SIGNED DRAWING IS ON FILE IN THE CENTRAL OFFICE.	VDOT ROAD AND BRIDGE STANDARDS	
700	FOUR INCH SQUARE TUBE SIGN POST SIGN BRACING DETAILS VIRGINIA DEPARTMENT OF TRANSPORTATION	REVISION DATE NEW 08/19	SHEET 9 OF 12 1321.48

STP-2

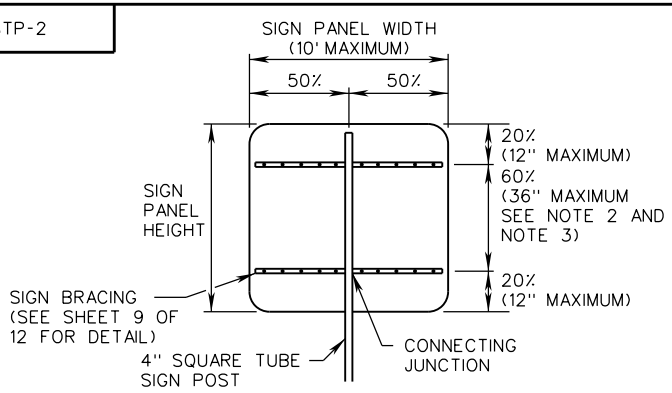

SINGLE POST - BRACING DIAGRAM
TYPICAL - TWO BRACE

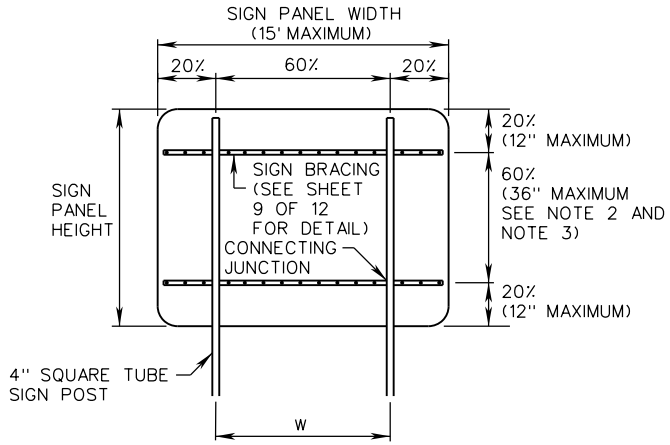

TWO POST - BRACING DIAGRAM
TYPICAL - TWO BRACE

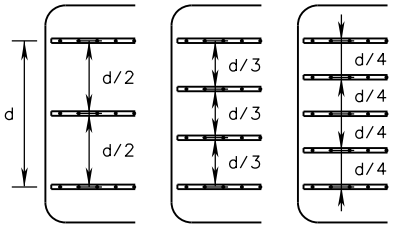

DETAIL A - SPACING OF MULTIPLE BRACING

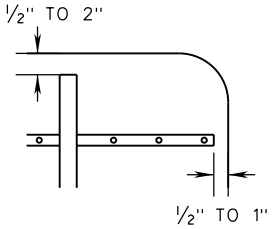

DETAIL B - INSTALLATION TOLERANCES

NOTES:

1. SIGN PANEL WIDTHS 36" OR GREATER SHALL REQUIRE SIGN BRACING.
2. VERTICAL SPACING OF SIGN BRACING SHALL NOT EXCEED 12" FROM THE TOP OR BOTTOM EDGE OF SIGN PANEL TO FIRST BRACE AND 36" BETWEEN BRACES. IF THE SPACING BETWEEN BRACES EXCEEDS 36" THEN ADDITIONAL SIGN BRACING SHALL BE ADDED. ALL SIGN BRACING SHALL BE EQUALLY SPACED BETWEEN THE TOP AND BOTTOM BRACE. SEE DETAIL A.
3. MAXIMUM SIGN PANEL AREA PER POST TO BRACE JUNCTION SHALL BE 10 SQ. FT. ADDITIONAL SIGN BRACING SHALL BE INSTALLED IF 10 SQ. FT PER POST TO BRACE JUNCTION IS EXCEEDED.
4. ONE SPLICE PER BRACE WILL BE PERMITTED. BRACE SPLICE SHALL BE IN ACCORDANCE WITH THE MANUFACTURER'S RECOMMENDATIONS. BRACING SHALL NOT BE SPLICED WITHIN 6" OF A BRACE TO POST JUNCTION. SPLICES SHALL NOT BE IN VERTICAL ALIGNMENT BUT SHALL BE OFFSET NO LESS THAN 12" FROM EACH OTHER.
5. TOP OF SIGN PANEL SHALL BE MOUNTED ½" TO 2" WITH THE TOP OF THE POST AND ½" TO 1" WITH THE SIDE OF THE SIGN BRACING. SEE DETAIL B.
6. POST LENGTHS FOR MULTI-POST SIGNS SHALL BE SIGN PANEL HEIGHT PLUS 6".

A COPY OF THE ORIGINAL SEALED AND SIGNED DRAWING IS ON FILE IN THE CENTRAL OFFICE.

FOUR INCH SQUARE TUBE SIGN POST

SIGN BRACING AND SIGN PANEL ATTACHMENT DETAILS

VIRGINIA DEPARTMENT OF TRANSPORTATION

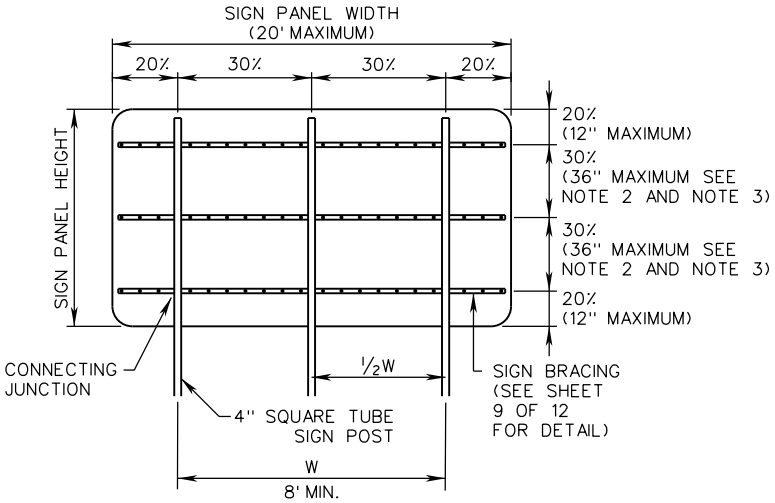

THREE POST - BRACING DIAGRAM
TYPICAL - THREE BRACE

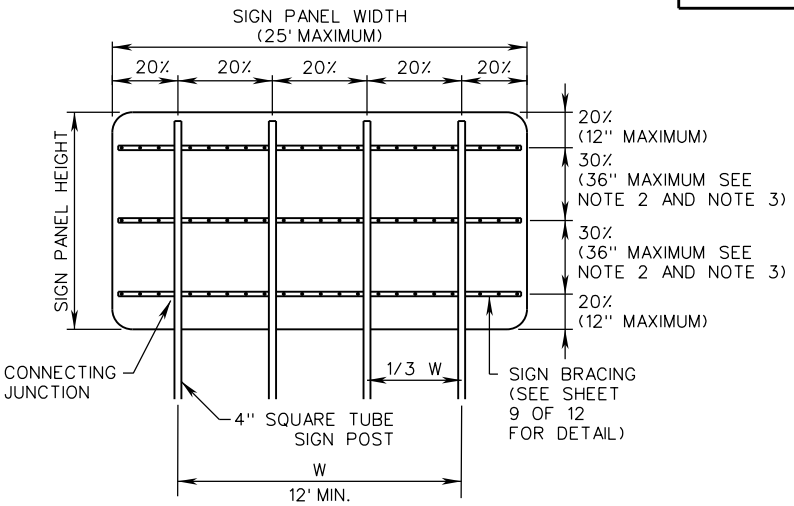

FOUR POST - BRACING DIAGRAM
TYPICAL - THREE BRACE

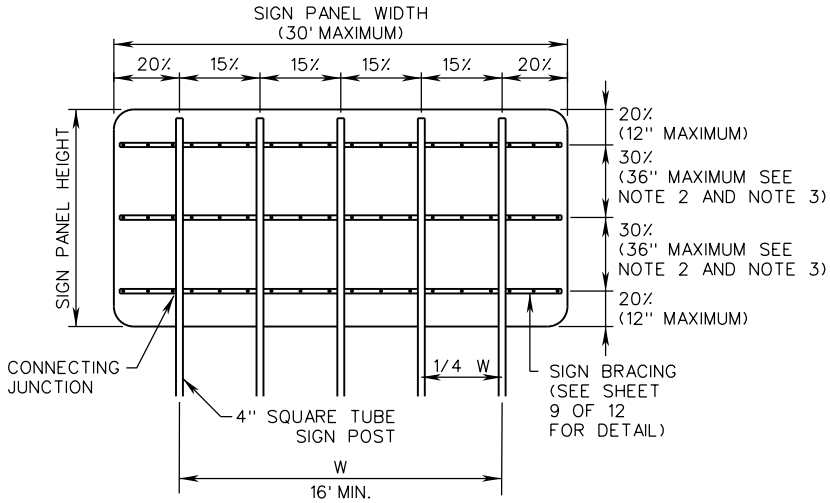

FIVE POST - BRACING DIAGRAM
TYPICAL - THREE BRACE

NOTES:

SEE SHEET 1321.49 FOR ALL NOTES AND DETAILS NOT SHOWN.

SPECIFICATION REFERENCE	A COPY OF THE ORIGINAL SEALED AND SIGNED DRAWING IS ON FILE IN THE CENTRAL OFFICE.	VDOT ROAD AND BRIDGE STANDARDS	
700	FOUR INCH SQUARE TUBE SIGN POST SIGN BRACING AND SIGN PANEL ATTACHMENT DETAILS VIRGINIA DEPARTMENT OF TRANSPORTATION	REVISION DATE NEW 08/19	SHEET 11 OF 12 1321.50

STP-2

SIGN POSTS REQUIRING BRACING

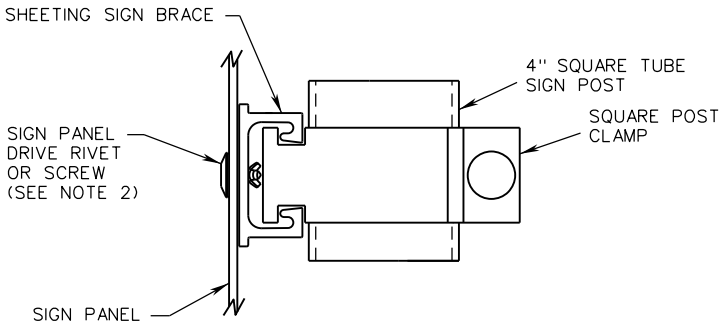

SINGLE SIGN PANEL DETAIL

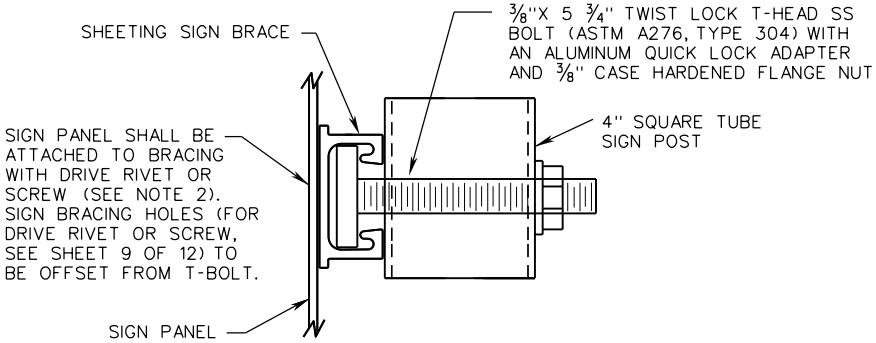

SINGLE SIGN PANEL ALTERNATE METHOD DETAIL

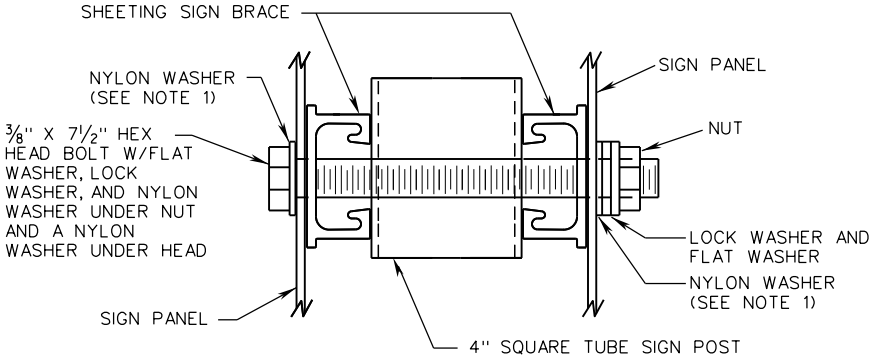

BACK-TO-BACK SIGN PANEL DETAIL

NOTES:

1. NYLON WASHER SHALL BE 1/16" THICK MINIMUM WITH AN OUTSIDE DIAMETER OF 1" AND AN INSIDE DIAMETER OF 7/16".
2. DRIVE RIVET SHALL BE 3/16" OR 3/8" ALUMINUM FLAT HEAD RIVET WITH STEEL PINS AND NYLON OR RUBBER WASHER.
3. DRIVE RIVET SHALL NOT BE USED FOR SIGNS WITHOUT BRACING.

A COPY OF THE ORIGINAL SEALED AND SIGNED DRAWING IS ON FILE IN THE CENTRAL OFFICE.

FOUR INCH SQUARE TUBE SIGN POST

SIGN BRACING AND SIGN PANEL ATTACHMENT DETAILS

VIRGINIA DEPARTMENT OF TRANSPORTATION

SPECIFICATION REFERENCE

700

STANDARD

THIS PAGE INTENTIONALLY LEFT BLANK

SPECIFICATION REFERENCE	TITLE VIRGINIA DEPARTMENT OF TRANSPORTATION	VDOT ROAD AND BRIDGE STANDARDS REVISION DATE	SHEET 1 OF 1 ____._

SSP-VA

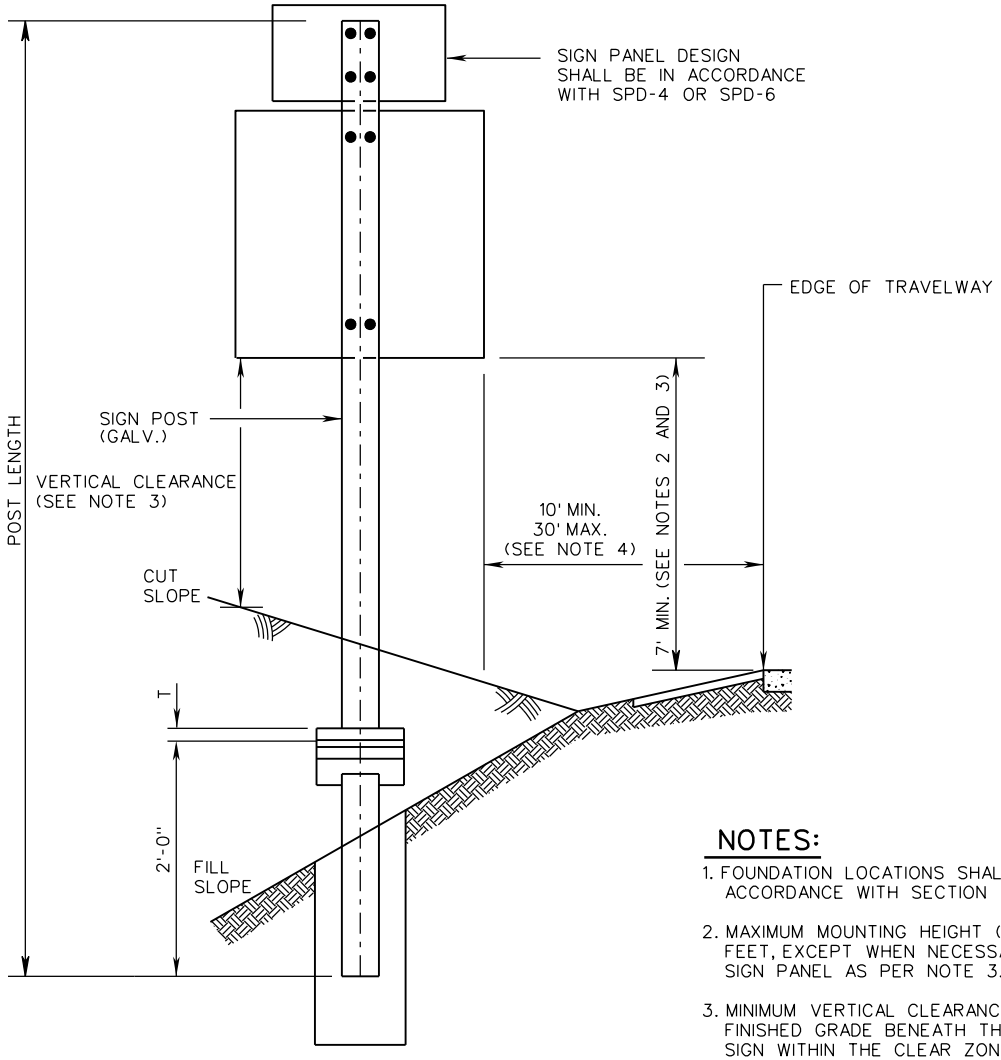

NOTES:

1. FOUNDATION LOCATIONS SHALL BE APPROVED BY ENGINEER PRIOR TO INSTALLATION IN ACCORDANCE WITH SECTION 700.

2. MAXIMUM MOUNTING HEIGHT (h) FOR THE BOTTOM-MOST SIGN PANEL(S) SHALL BE 8 FEET, EXCEPT WHEN NECESSARY TO ACHIEVE MINIMUM VERTICAL CLEARANCE BENEATH SIGN PANEL AS PER NOTE 3.

3. MINIMUM VERTICAL CLEARANCE (DISTANCE BETWEEN BOTTOM OF SIGN PANEL AND FINISHED GRADE BENEATH THE PANEL) SHALL BE 7 FEET FOR ANY PORTION OF THE SIGN WITHIN THE CLEAR ZONE. THIS MINIMUM VERTICAL CLEARANCE MAY BE REDUCED TO 5 FEET FOR EITHER OF THE FOLLOWING CONDITIONS:
   - WHEN SIGNS OR PORTIONS OF SIGNS ARE LOCATED MORE THAN 10 FEET UP A CUT SLOPE GREATER THAN 3:1, OR
   - WHEN THE SIGN IS LOCATED AT LEAST THE MINIMUM DISTANCE BEHIND CURB, BARRIER, OR GUARDRAIL AS PER NOTE 4.

4. THE LATERAL CLEARANCE TO THE SIGN PANEL SHALL BE A MINIMUM OF 2 FEET FROM THE FACE OF CURB OR 4 FEET FROM FACE OF BARRIER, IF PRESENT. UNLESS OTHERWISE APPROVED BY THE ENGINEER, SIGNS PLACED BEHIND GUARDRAIL SHALL BE LOCATED SUCH THAT THE NEAR SIDE EDGE OF THE SIGN PANEL IS OUTSIDE OF THE GUARDRAIL DEFLECTION DISTANCE.

VDOT ROAD AND BRIDGE STANDARDS	A COPY OF THE ORIGINAL SEALED AND SIGNED DRAWING IS ON FILE IN THE CENTRAL OFFICE.	SPECIFICATION REFERENCE
SHEET 1 OF 4	VA SIGN STRUCTURE INSTALLATION DETAILS	700
1322.10	REVISION DATE 01/15	VIRGINIA DEPARTMENT OF TRANSPORTATION

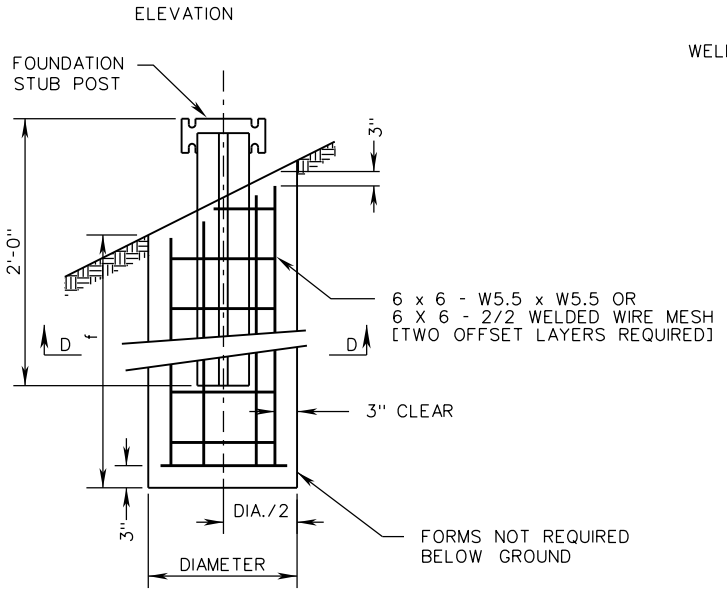

FOUNDATION

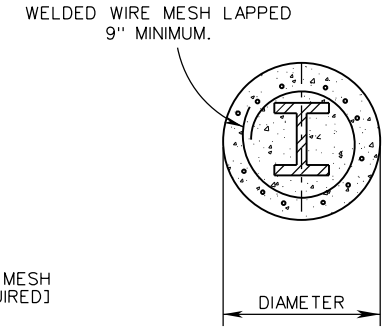

SECTION D-D

NOTES:

1. POST LENGTH IS FOR ESTIMATING PURPOSES ONLY. THE CONTRACTOR SHALL DETERMINE THE ACTUAL POST LENGTH AT THE FIELD LOCATION OF THE SIGN STRUCTURE BASED ON FINISHED GRADE ELEVATION.
2. TOTAL POST LENGTH QUANTITY = LENGTH OF POST ABOVE THE BOLT KEEPER PLATE + THE FOUNDATION STUB POST LENGTH (2'-0").

SIGN POST AND FOUNDATION DETAILS

STRUCTURE TYPE	SIGN PANEL DIMENSIONS		SIGN POST	POST LENGTH DIMENSIONS (SEE NOTES 1 & 2)	FOUNDATION DIMENSIONS		WELDED WIRE MESH		STEEL BASE PLATE
	W	H		SLOPE 3:1 TO 2:1	f	DIAMETER	LENGTH	SQ. FT.	T (THICKNESS)
VA-A	3'	3'	S3 x 5.7	12'-3"	3'-0"	1'-0"	2'-6"	5	½"
VA-B	4'	4'	W4 x 13	12'-3"	4'-6"	1'-9"	4'-4"	20	1"
VA-C	4'	5'		13'-3"					
VA-D	5'	3'		12'-9"					
VA-E	6'	5'		13'-9"					
VA-F	4'	-		13'-9"					
VA-G	5'	-		13'-0"					
VA-K	4'	5'		17'-3"					
VA-K	4'	4'		-					
VA-L	6'	6'		14'-6"					
VA-M	5'	5'		13'-9"					
VA-A2	6'	3'	W6 x 12	13'-9"					
VA-N	7'	7'	W6 x 12	15'-9"	6'-0"	2'-6"	5'-6"	40	1"
VA-O	13'	5'	W6 x 12	15'-9"	7'-0"	2'-6"	6'-6"	47	1"

SPECIFICATION REFERENCE	A COPY OF THE ORIGINAL SEALED AND SIGNED DRAWING IS ON FILE IN THE CENTRAL OFFICE.	VDOT ROAD AND BRIDGE STANDARDS
700	VA SIGN STRUCTURE INSTALLATION DETAILS VIRGINIA DEPARTMENT OF TRANSPORTATION	REVISION DATE 01/15 SHEET 2 OF 4 1322.11

SSP-VA

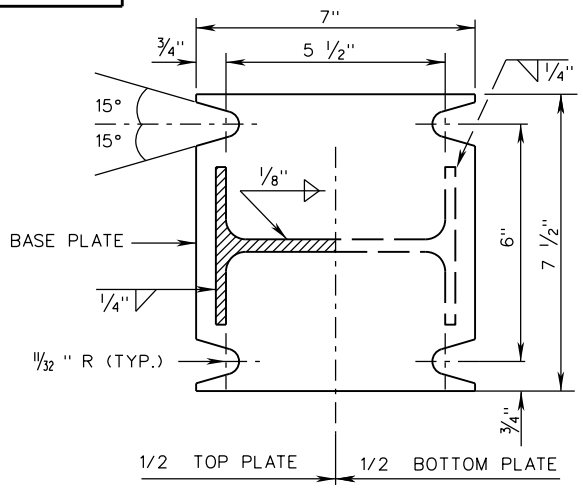

SECTION A-A
FOR W6 x 12 POST

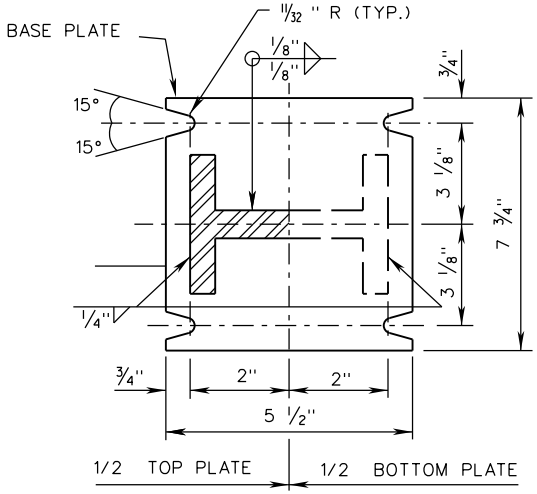

SECTION A-A
FOR W4 x 13 POST

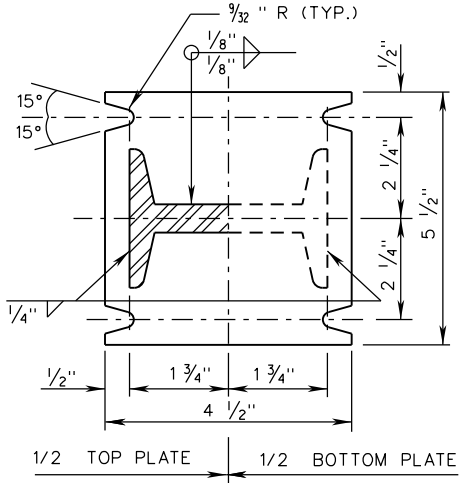

SECTION A-A
FOR S3 x 5.7 POST

STANDARD INSTALLATION

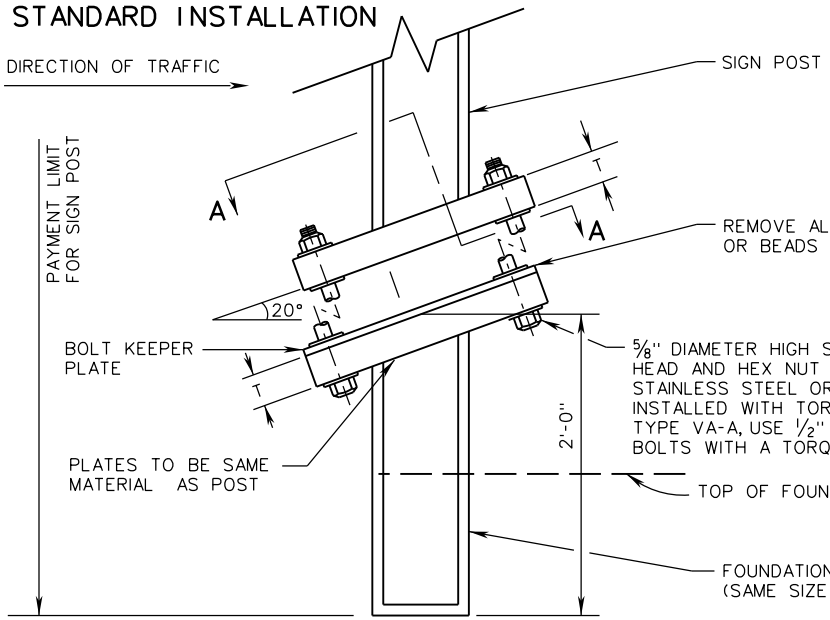

MEDIAN ONLY INSTALLATION

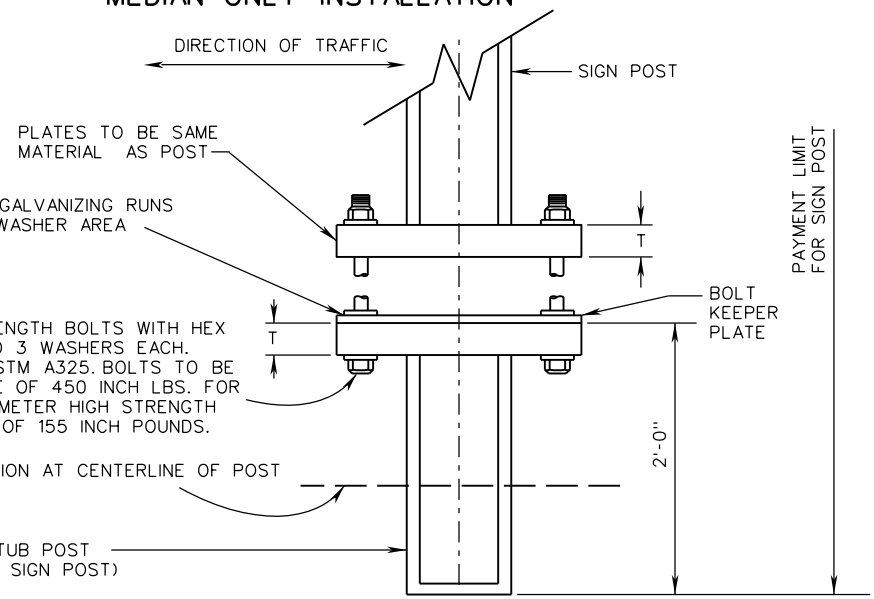

REMOVE ALL GALVANIZING RUNS OR BEADS IN WASHER AREA

5/8" DIAMETER HIGH STRENGTH BOLTS WITH HEX HEAD AND HEX NUT AND 3 WASHERS EACH. STAINLESS STEEL OR ASTM A325. BOLTS TO BE INSTALLED WITH TORQUE OF 450 INCH LBS. FOR TYPE VA-A, USE 1/2" DIAMETER HIGH STRENGTH BOLTS WITH A TORQUE OF 155 INCH POUNDS.

TOP OF FOUNDATION AT CENTERLINE OF POST

FOUNDATION STUB POST (SAME SIZE AS SIGN POST)

VDOT
ROAD AND BRIDGE STANDARDS

SHEET 3 OF 4
1322.12

REVISION DATE
01/15

A COPY OF THE ORIGINAL SEALED AND SIGNED DRAWING IS ON FILE IN THE CENTRAL OFFICE.

VA SIGN STRUCTURE

INSTALLATION DETAILS

VIRGINIA DEPARTMENT OF TRANSPORTATION

SPECIFICATION REFERENCE
700

NOTES:

1. 4" MAXIMUM PROJECTION WHEN MEASURED ABOVE A 60" CHORD ALIGNED RADIALLY TO THE CENTERLINE OF THE HIGHWAY AND CONNECTING ANY POINT, WITHIN THE LENGTH OF THE CHORD, ON THE GROUND SURFACE ON THE OTHER SIDE.
2. SEE STANDARD SSP-VIA FOR SHIM DETAIL.

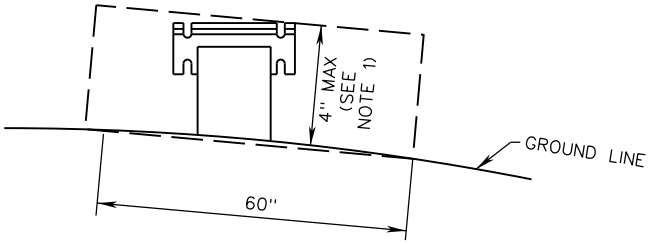

METHOD TO DETERMINE
MAXIMUM PROJECTION OF FOUNDATION STUB POST

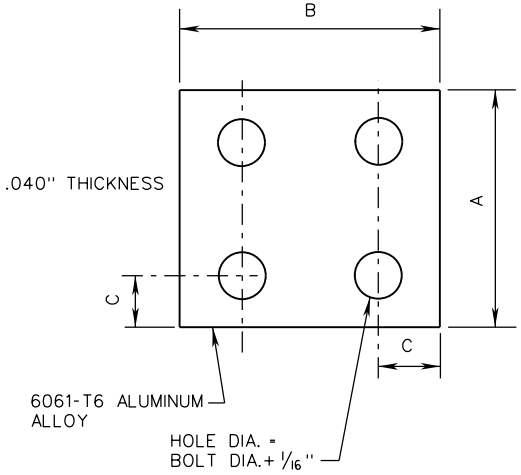

BOLT KEEPER PLATE

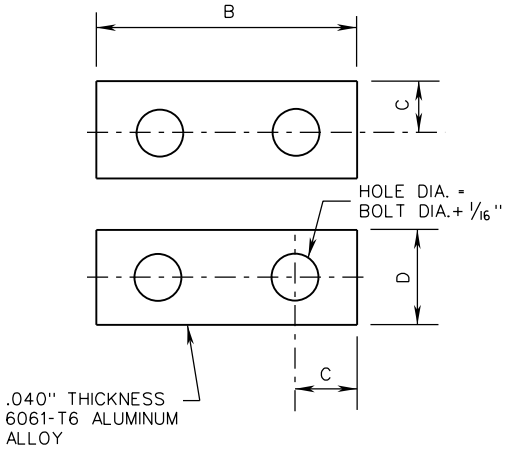

ALTERNATE BOLT KEEPER PLATE

BOLT KEEPER PLATE DATA

POST SHAPE	A	B	C	D
S3 x 5.7	5 1/2"	4 1/2"	1/2"	1"
W4 x 13	7 3/4"	5 1/2"	3/4"	1 1/2"
W6 x 12	7 1/2"	7"	3/4"	1 1/2"

SPECIFICATION REFERENCE	A COPY OF THE ORIGINAL SEALED AND SIGNED DRAWING IS ON FILE IN THE CENTRAL OFFICE.	VDOT ROAD AND BRIDGE STANDARDS	
700	VA SIGN STRUCTURE INSTALLATION DETAILS VIRGINIA DEPARTMENT OF TRANSPORTATION	REVISION DATE 01/15	SHEET 4 OF 4 1322.13

SSP-VIA

NOTES:

1. FOUNDATION LOCATIONS SHALL BE APPROVED BY ENGINEER PRIOR TO INSTALLATION IN ACCORDANCE WITH SECTION 700.

2. MINIMUM VERTICAL CLEARANCE (DISTANCE BETWEEN BOTTOM OF SIGN PANEL AND FINISHED GRADE BENEATH THE PANEL) SHALL BE 7 FEET FOR ANY PORTION OF THE SIGN WITHIN THE CLEAR ZONE. THIS MINIMUM VERTICAL CLEARANCE MAY BE REDUCED TO 5 FEET FOR EITHER OF THE FOLLOWING CONDITIONS:
   - WHEN SIGNS OR PORTIONS OF SIGNS ARE LOCATED MORE THAN 10 FEET UP A CUT SLOPE GREATER THAN 3:1, OR
   - WHEN THE SIGN IS LOCATED AT LEAST THE MINIMUM DISTANCE BEHIND CURB, BARRIER, OR GUARDRAIL AS PER NOTE 6.

3. SIGN PANEL SHALL BE DESIGNED IN ACCORDANCE WITH SPD-2, SPD-3 OR SPD-7.

4. THE VERTICAL T-BEAM SHALL BE 2"W X 2"D X ¼" THICK STRUCTURAL ALUMINUM ALLOY 6061-T6AT A MINIMUM LENGTH OF 6'-0" AND EXTENDED TO THE NEXT HORIZONTAL SUPPORT BAR ON THE SSP-VIA STRUCTURE.

5. THE T-BEAM SHALL BE ATTACHED TO THE SSP-VIA STRUCTURE BY THE FOLLOWING METHODS:
   - T-BEAM FOR THE SPD-2 SIGN PANEL SHALL BE ATTACHED BY USING A MINIMUM OF TWO POST CLIP BOLTS AT EACH CROSS MEMBER.
   - T-BEAM FOR THE SPD-3 SIGN PANEL SHALL BE ATTACHED BY USING TWO ASTM F593, ALLOY 304 STAINLESS STEEL ⅜" DIAMETER-16 UNC BOLT WITH STAINLESS STEEL NUT AND FLAT WASHER AT ZEE BAR CONNECTIONS AND TWO POST CLAMP AND BOLT AT EACH TEE-BAR CONNECTION.
   - T-BEAM FOR THE SPD-7 SIGN PANEL SHALL BE ATTACHED BY USING A MINIMUM OF TWO POST CLAMP AND POST CLAMP BOLTS AT EACH STIFFENER.

6. THE LATERAL CLEARANCE TO THE SIGN PANEL SHALL BE A MINIMUM OF 2 FEET FROM THE FACE OF CURB OR 4 FEET FROM FACE OF BARRIER, IF PRESENT. UNLESS OTHERWISE APPROVED BY THE ENGINEER, SIGNS PLACED BEHIND GUARDRAIL SHALL BE LOCATED SUCH THAT THE NEAR SIDE EDGE OF THE SIGN PANEL IS OUTSIDE OF THE GUARDRAIL DEFLECTION DISTANCE.

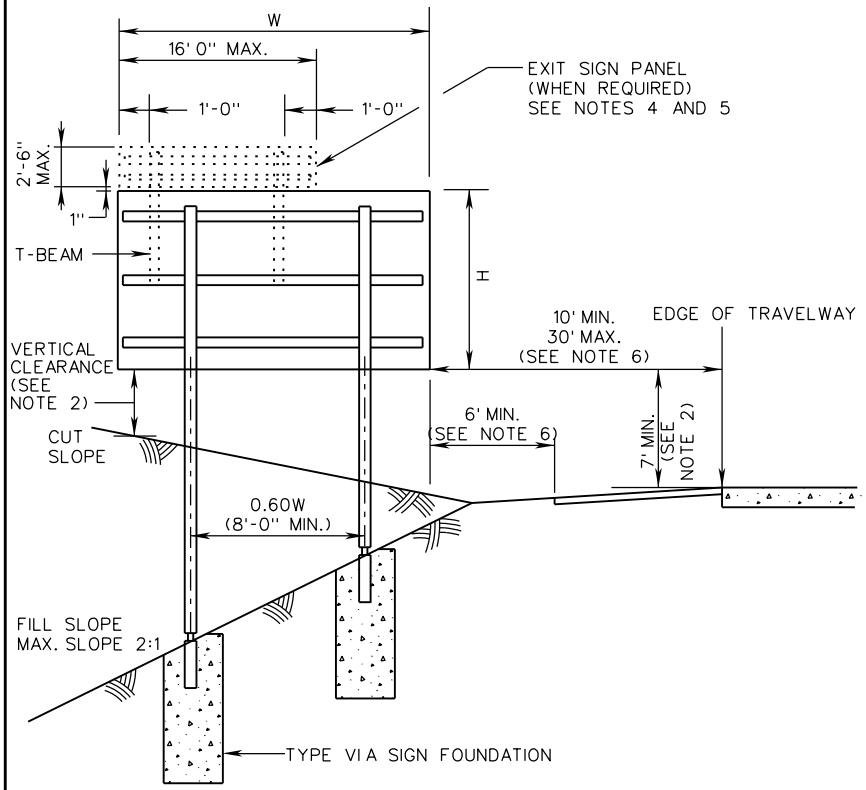

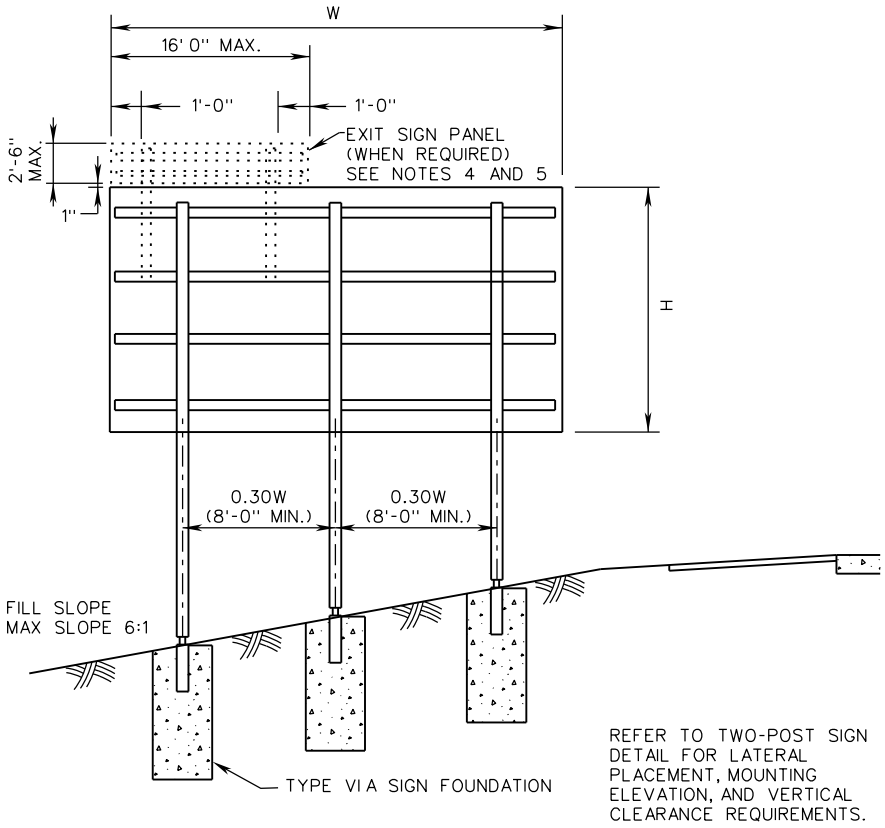

REFER TO TWO-POST SIGN DETAIL FOR LATERAL PLACEMENT, MOUNTING ELEVATION, AND VERTICAL CLEARANCE REQUIREMENTS.

VDOT ROAD AND BRIDGE STANDARDS	A COPY OF THE ORIGINAL SEALED AND SIGNED DRAWING IS ON FILE IN THE CENTRAL OFFICE. INTERSTATE SIGN STRUCTURE INSTALLATION DETAILS VIRGINIA DEPARTMENT OF TRANSPORTATION	SPECIFICATION REFERENCE
SHEET 1 OF 10 / 1323.10	REVISION DATE 01/15	700

SSP-VIA

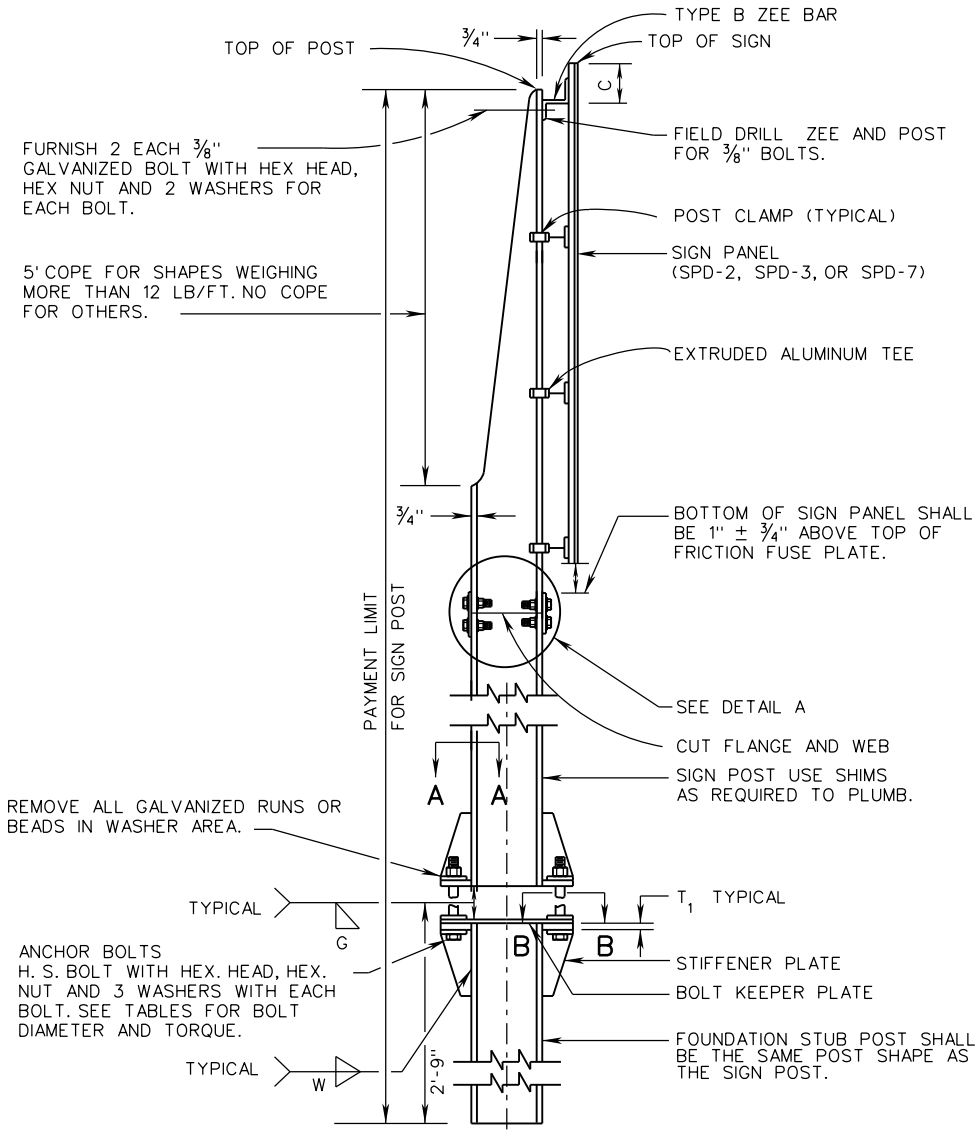

SIGN POST AND FOUNDATION STUB POST ELEVATION

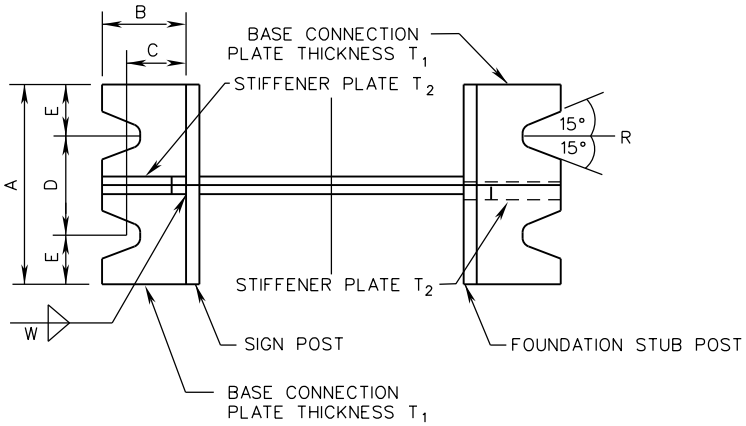

SECTION A-A SECTION B-B

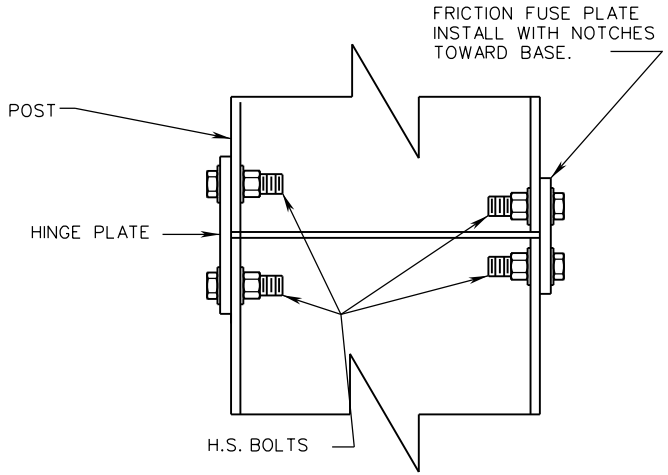

DETAIL A

DIRECTION OF TRAFFIC

NOTES:

1. ALL POST LENGTHS SHALL BE FIELD CHECKED BY CONTRACTOR PRIOR TO FABRICATION.

SPECIFICATION REFERENCE	A COPY OF THE ORIGINAL SEALED AND SIGNED DRAWING IS ON FILE IN THE CENTRAL OFFICE.	VDOT ROAD AND BRIDGE STANDARDS	
700	INTERSTATE SIGN STRUCTURE INSTALLATION DETAILS VIRGINIA DEPARTMENT OF TRANSPORTATION	REVISION DATE 01/15	SHEET 2 OF 10 1323.11

SSP-VIA

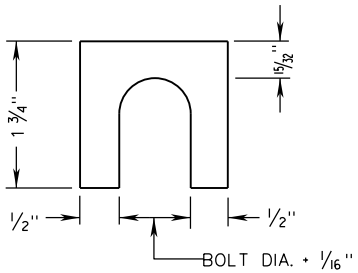

FURNISH 2 EACH .063"± AND 2 EACH .032"± THICK SHIMS PER POLE. SHIMS SHALL BE FABRICATED FROM BRASS CONFORMING TO ASTM B36 OR FROM STAINLESS STEEL WITH A MINIMUM CHROMIUM CONTENT OF 11.50% . NO MORE THAN 2 SHIMS SHALL BE USED PER BOLT WITH A MAXIMUM OF 4 SHIMS PER POST.

SHIM DETAIL

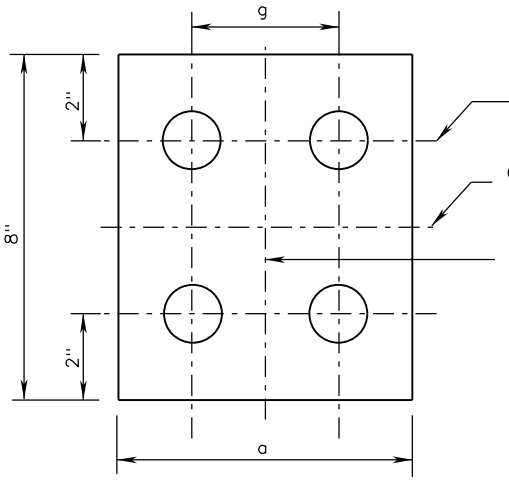

HINGE PLATE DETAIL

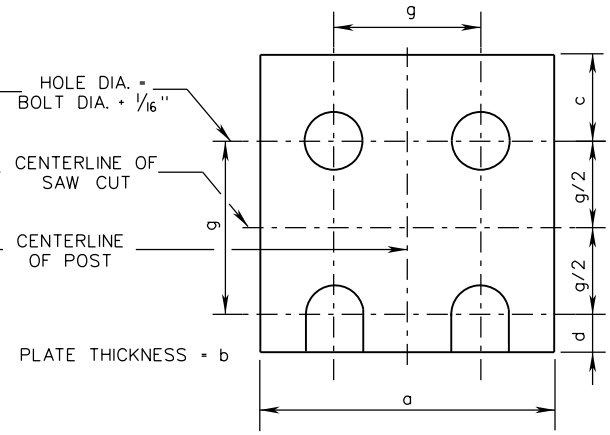

FUSE PLATE DETAIL

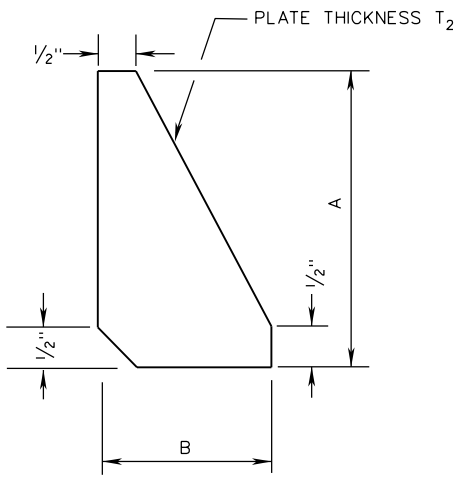

STIFFENER PLATE

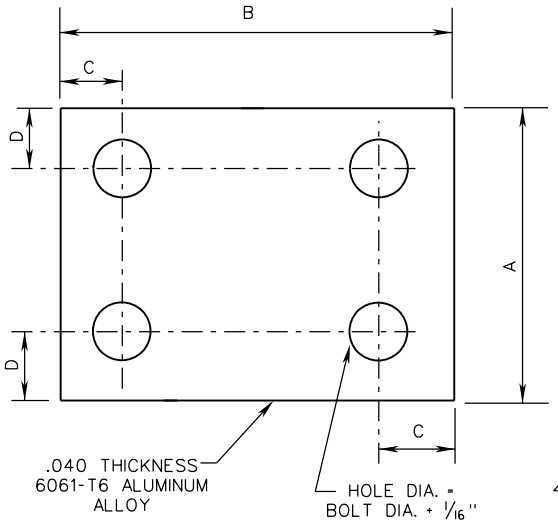

BOLT KEEPER PLATE

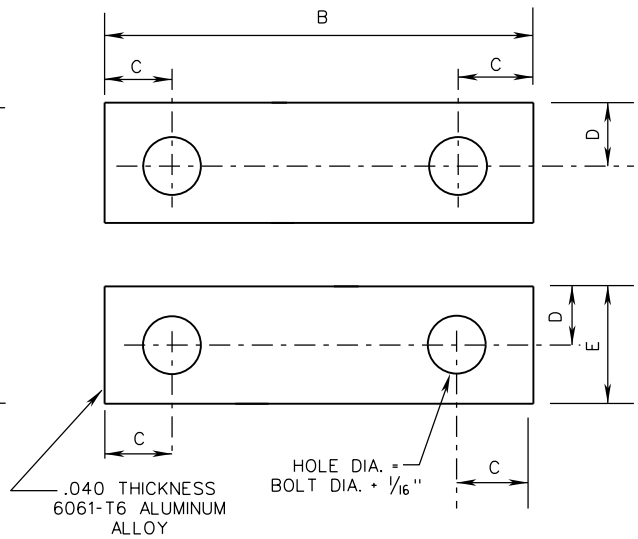

ALTERNATE BOLT KEEPER PLATE

VDOT ROAD AND BRIDGE STANDARDS	A COPY OF THE ORIGINAL SEALED AND SIGNED DRAWING IS ON FILE IN THE CENTRAL OFFICE.		SPECIFICATION REFERENCE
SHEET 3 OF 10	INTERSTATE SIGN STRUCTURE		700
1323.12	INSTALLATION DETAILS	REVISION DATE 01/15	
	VIRGINIA DEPARTMENT OF TRANSPORTATION		

SSP-VIA

TYPE VI A	FOOTING DIMENSIONS D	FOOTING DIMENSIONS d	BAR P LENGTH	BAR P BAR SIZE	BAR P NO.	BAR H BAR SIZE	BAR H NO.	BAR H LENGTH
A	2'-3"	4'-6"	4'-1"	# 4	8	# 4	5	6'-7"
B								
C								
D								
E								
F	3'-0"	7'-0"	6'-7"	# 6	8	# 4	8	9'-0"
G								
H								
J								
K								
L								
M	3'-6"	9'-0"	8'-7"	# 7	8	# 4	10	10'-7"
N								
O								
P								
Q	3'-0"	7'-0"	6'-7"	# 6	8	# 4	8	9'-0"
R								
S								
T								
U								
V								
W								
X	3'-0"	8'-0"	7'-7"	# 6	8	# 4	9	9'-0"
Y	3'-6"	9'-0"	8'-7"	# 7	8	# 4	10	10'-7"
Z								
AA								
BB								
CC	3'-0"	7'-0"	6'-7"	# 6	8	# 4	8	9'-0"
DD								
EE								
FF								
GG	3'-6"	9'-0"	8'-7"	# 7	8	# 4	10	10'-7"
HH								
JJ								
KK								
LL	3'-6"	10'-0"	9'-7"	# 8	8	# 4	11	10'-7"
MM								
NN								

TYPE VI A	FOOTING DIMENSIONS D	FOOTING DIMENSIONS d	BAR P LENGTH	BAR P BAR SIZE	BAR P NO.	BAR H BAR SIZE	BAR H NO.	BAR H LENGTH
OO	3'-0"	7'-0"	6'-7"	# 6	8	# 4	8	9'-0"
PP								
QQ								
RR								
SS								
TT	3'-0"	8'-0"	7'-7"	# 6	8	# 4	9	9'-0"
UU	3'-6"	9'-0"	8'-7"	# 7	8	# 4	10	10'-7"
VV								
WW								
XX								
YY	3'-6"	10'-0"	9'-7"	# 8	8	# 4	11	10'-7"
ZZ	3'-0"	7'-0"	6'-7"	# 6	8	# 4	8	9'-0"
AB	3'-0"	8'-0"	7'-7"	# 6	8	# 4	9	9'-0"
AC	3'-6"	9'-0"	8'-7"	# 7	8	# 4	10	10'-7"
AD								
AE								
AF	3'-6"	10'-0"	9'-7"	# 8	8	# 4	11	10'-7"
AG								
AH	4'-0"	12'-0"	11'-7"	# 9	8	# 4	13	12'-1"
AJ								
AK								
AL	4'-0"	9'-6"	9'-1"	# 7	8	# 4	10	12'-1"
AM								
AN								
AO								
AP	4'-0"	12'-0"	11'-7"	# 9	8	# 4	13	12'-1"
AQ								
AR								
AS								
AT								
AU	4'-0"	9'-6"	9'-1"	# 7	8	# 4	10	12'-1"
AV								
AW	4'-0"	12'-0"	11'-7"	# 9	8	# 4	13	12'-1"
AX								
AY								
AZ								
BC	4'-0"	13'-6"	13'-1"	# 10	8	# 4	14	12'-1"
BD								

PLAN

PARALLEL TO FACE AT FOOTING

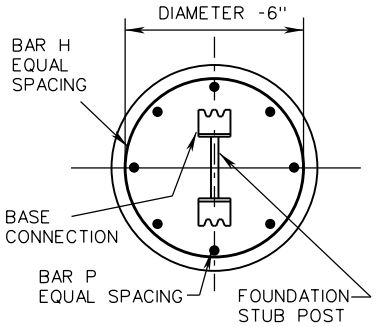

ELEVATION

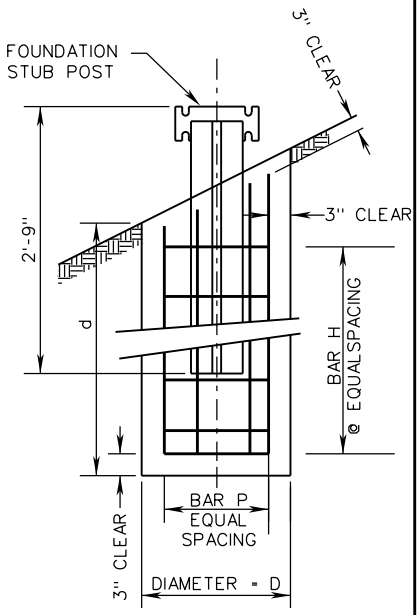

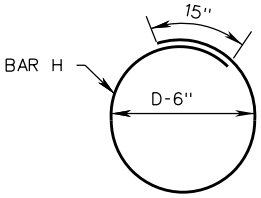

NOTES:

1. 4" MAXIMUM PROJECTION WHEN MEASURED ABOVE A 60" CHORD ALIGNED RADIALLY TO THE CENTERLINE OF THE HIGHWAY AND CONNECTING ANY POINT, WITHIN THE LENGTH OF THE CHORD, ON THE GROUND SURFACE ON THE OTHER SIDE.

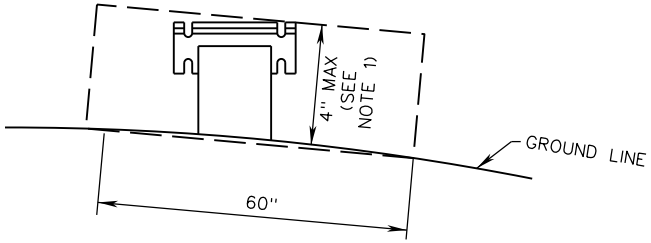

METHOD TO DETERMINE
MAXIMUM PROJECTION OF FOUNDATION STUB POST

SPECIFICATION REFERENCE
700

A COPY OF THE ORIGINAL SEALED AND SIGNED DRAWING IS ON FILE IN THE CENTRAL OFFICE.

INTERSTATE SIGN STRUCTURE

INSTALLATION DETAILS

VIRGINIA DEPARTMENT OF TRANSPORTATION

VDOT
ROAD AND BRIDGE STANDARDS

REVISION DATE	SHEET 4 OF 10
01/15	1323.13

SSP-VIA

SIGN STRUCTURE TYPE VIA	SIGN PANEL DIMENSIONS		POST SHAPE	POST LENGTH (SEE NOTE 1)			ANCHOR BOLTS	
	W	H		NO. 1	NO. 2	NO. 3	DIA.	TORQUE IN.-LBS.
A	---	---	---	---	---	---	---	---
B	12′	4′	W10X12	13′-1″	16′-5″	---	1/2″	200
C	11′	5′	W10X12	14′-1″	16′-7″	---	1/2″	200
D	---	---	---	---	---	---	---	---
E	10′	6′	W10X12	15′-0″	17′-9″	---	1/2″	200
F	12′	6′	W12X14	15′-5″	18′-5″	---	5/8″	600
G	14′	6′	W12X16	15′-9″	19′-1″	---	5/8″	600
H	16′	6′	W12X19	15′-8″	20′-2″	---	5/8″	600
J	18′	6′	W12X19	15′-11″	20′-11″	---	3/4″	900
K	20′	6′	W12X22	16′-2″	21′-8″	---	3/4″	900
L	22′	6′	W14X26	16′-4″	22′-6″	---	3/4″	900
M	24′	6′	W14X26	16′-7″	23′-3″	---	7/8″	1000
N	26′	6′	W14X26	16′-9″	24′-0″	---	7/8″	1000
O	28′	6′	W16X31	17′-1″	24′-10″	---	7/8″	1000
P	30′	6′	W16X31	17′-3″	25′-7″	---	7/8″	1000
Q	---	---	---	---	---	---	---	---
R	10′	8′	W12X14	16′-8″	19′-4″	---	5/8″	600
S	12′	8′	W12X16	16′-9″	20′-1″	---	5/8″	600
T	14′	8′	W12X19	17′-0″	20′-10″	---	3/4″	900
U	16′	8′	W12X22	17′-2″	21′-8″	---	3/4″	900
V	18′	8′	W14X22	17′-5″	22′-5″	---	3/4″	900
W	20′	8′	W14X26	17′-8″	23′-2″	---	7/8″	1000
X	22′	8′	W16X26	17′-10″	24′-0″	---	7/8″	1000
Y	24′	8′	W16X31	18′-1″	24′-9″	---	7/8″	1000
Z	26′	8′	W14X34	18′-4″	25′-6″	---	1″	1500

NOTES:

1. POST LENGTH IS FOR ESTIMATING PURPOSES ONLY. THE CONTRACTOR SHALL DETERMINE THE ACTUAL POST LENGTH AT THE FIELD LOCATION OF THE SIGN STRUCTURE BASED ON FINISHED GRADE ELEVATION.
2. TOTAL POST LENGTH QUANTITY = LENGTH OF POST ABOVE THE BOLT KEEPER PLATE + THE FOUNDATION STUB POST LENGTH (2′-9″).

VDOT
ROAD AND BRIDGE STANDARDS

SHEET 5 OF 10
1323.14

REVISION DATE
01/15

A COPY OF THE ORIGINAL SEALED AND SIGNED DRAWING IS ON FILE IN THE CENTRAL OFFICE.

INTERSTATE SIGN STRUCTURE

INSTALLATION DETAILS

VIRGINIA DEPARTMENT OF TRANSPORTATION

SPECIFICATION REFERENCE
700

SIGN STRUCTURE TYPE VIA	SIGN PANEL DIMENSIONS		POST SHAPE	POST LENGTH (SEE NOTE 1)			ANCHOR BOLTS	
	W	H		NO. 1	NO. 2	NO. 3	DIA.	TORQUE IN.-LBS.
AA	28′	8′	W18X35	18′-6″	26′-3″	---	1″	1500
BB	30′	8′	W18X40	18′-9″	27′-1″	---	1″	1500
CC	10′	10′	W12X19	18′-6″	21′-3″	---	5/8″	600
DD	12′	10′	W14X22	18′-9″	22′-1″	---	3/4″	900
EE	14′	10′	W14X22	19′-0″	22′-10″	---	3/4″	900
FF	16′	10′	W14X26	19′-2″	23′-8″	---	7/8″	1000
GG	18′	10′	W16X31	19′-5″	24′-5″	---	7/8″	1000
HH	20′	10′	W16X31	19′-8″	25′-2″	---	1″	1500
JJ	22′	10′	W18X35	19′-10″	26′-0″	---	1″	1500
KK	24′	10′	W18X40	20′-1″	26′-9″	---	1″	1500
LL	26′	10′	W21X44	20′-4″	27′-6″	---	1″	1500
MM	28′	10′	W21X44	20′-6″	28′-3″	---	1″	1500
NN	30′	10′	W21X44	21′-0″	28′-9″	---	1 1/8″	2540
OO	10′	9′	W12X16	17′-6″	20′-3″	---	5/8″	600
PP	12′	9′	W12X19	17′-9″	21′-1″	---	3/4″	900
QQ	14′	9′	W12X22	18′-0″	21′-10″	---	3/4″	900
RR	16′	9′	W14X26	18′-2″	22′-8″	---	3/4″	900
SS	18′	9′	W14X26	18′-5″	23′-5″	---	7/8″	1000
TT	20′	9′	W16X31	18′-8″	24′-2″	---	7/8″	1000
UU	22′	9′	W16X31	18′-10″	25′-0″	---	7/8″	1000
VV	24′	9′	W18X35	19′-1″	25′-9″	---	1″	1500
WW	26′	9′	W18X35	19′-4″	26′-6″	---	1″	1500
XX	28′	9′	W18X40	19′-10″	27′-0″	---	1″	1500
YY	30′	9′	W21X44	20′-4″	27′-6″	---	1″	1500
ZZ	12′	12′	W14X26	20′-9″	24′-1″	---	7/8″	1000

NOTES:

1. POST LENGTH IS FOR ESTIMATING PURPOSES ONLY. THE CONTRACTOR SHALL DETERMINE THE ACTUAL POST LENGTH AT THE FIELD LOCATION OF THE SIGN STRUCTURE BASED ON FINISHED GRADE ELEVATION.
2. TOTAL POST LENGTH QUANTITY = LENGTH OF POST ABOVE THE BOLT KEEPER PLATE + THE FOUNDATION STUB POST LENGTH (2′-9″).

SPECIFICATION REFERENCE

700

A COPY OF THE ORIGINAL SEALED AND SIGNED DRAWING IS ON FILE IN THE CENTRAL OFFICE.

INTERSTATE SIGN STRUCTURE

INSTALLATION DETAILS

VIRGINIA DEPARTMENT OF TRANSPORTATION

VDOT

ROAD AND BRIDGE STANDARDS

REVISION DATE 01/15

SHEET 6 OF 10

1323.15

SSP-VIA

SIGN STRUCTURE TYPE VIA	SIGN PANEL DIMENSIONS		POST SHAPE	POST LENGTH (SEE NOTE 1)			ANCHOR BOLTS	
	W	H		NO. 1	NO. 2	NO. 3	DIA.	TORQUE IN.-LBS.
AB	14′	12′	W16X26	21′-0″	24′-10″	---	7/8″	1000
AC	16′	12′	W16X31	21′-2″	25′-8″	---	7/8″	1000
AD	18′	12′	W14X34	21′-5″	26′-5″	---	1″	1500
AE	20′	12′	W16X40	21′-5″	26′-11″	---	1″	1500
AF	22′	12′	W18X40	21′-7″	27′-9″	---	1 1/8″	2540
AG	24′	12′	W21X44	21′-10″	28′-6″	---	1 1/8″	2540
AH	26′	12′	W18X35	19′-5″	20′-11″	22′-5″	1″	1500
AJ	28′	12′	W18X35	19′-6″	21′-2″	22′-9″	1″	1500
AK	30′	12′	W18X40	19′-6″	21′-3″	23′-0″	1″	1500
AL	14′	14′	W16X31	23′-0″	26′-10″	---	1″	1500
AM	16′	14′	W18X35	23′-2″	27′-8″	---	1″	1500
AN	18′	14′	W18X40	23′-5″	28′-5″	---	1″	1500
AO	20′	14′	W21X44	23′-8″	29′-2″	---	1 1/8″	2540
AP	22′	14′	W16X40	21′-4″	22′-8″	23′-11″	1″	1500
AQ	24′	14′	W18X35	21′-4″	22′-9″	24′-2″	1″	1500
AR	26′	14′	W18X40	21′-5″	22′-11″	24′-5″	1″	1500
AS	28′	14′	W21X44	21′-6″	23′-2″	24′-9″	1″	1500
AT	30′	14′	W21X44	21′-6″	23′-3″	25′-0″	1″	1500
AU	16′	16′	W18X40	25′-2″	29′-8″	---	1 1/8″	2540
AV	18′	16′	W21X44	25′-5	30′-5″	---	1 1/8″	2540
AW	20′	16′	W18X35	23′-1″	24′-4″	25′-7″	1″	1500
AX	22′	16′	W18X40	23′-4″	24′-8″	25′-11″	1″	1500
AY	24′	16′	W21X44	23′-6″	24′-10″	26′-2″	1″	1500
AZ	26′	16′	W21X44	23′-6″	25′-0″	26′-6″	1″	1500
BC	28′	16′	W21X44	23′-6″	25′-2″	26′-9″	1″	1500
BD	30′	16′	W21X44	23′-6″	25′-3″	27′-0″	1 1/8″	2540

NOTES:

1. POST LENGTH IS FOR ESTIMATING PURPOSES ONLY. THE CONTRACTOR SHALL DETERMINE THE ACTUAL POST LENGTH AT THE FIELD LOCATION OF THE SIGN STRUCTURE BASED ON FINISHED GRADE ELEVATION.
2. TOTAL POST LENGTH QUANTITY = LENGTH OF POST ABOVE THE BOLT KEEPER PLATE + THE FOUNDATION STUB POST LENGTH (2′-9″).

VDOT
ROAD AND BRIDGE STANDARDS

SHEET 7 OF 10
1323.16

REVISION DATE
01/15

A COPY OF THE ORIGINAL SEALED AND SIGNED DRAWING IS ON FILE IN THE CENTRAL OFFICE.

INTERSTATE SIGN STRUCTURE

INSTALLATION DETAILS

VIRGINIA DEPARTMENT OF TRANSPORTATION

SPECIFICATION REFERENCE
700

SIGN STRUCTURE TYPE VIA	SUPPORT																					
	BASE CONNECTION DATA TABLE									FUSE AND HINGE PLATE DATA TABLE							BOLT KEEPER PLATE DATA TABLE					
	A	B	C	D	E	T_1	T_2	W	R	BOLT DIA.	a	b	c	d	g	g/2	BOLT DIA.	A	B	C	D	E
A	---	---	---	---	---	---	---	---	---	---	---	---	---	---	---	---	---	---	---	---	---	---
B	5"	2"	1 1/4"	2 3/4"	1 1/8"	5/8"	1/2"	1/4"	9/32"	1/2"	4"	3/16"	11/16"	5/8"	2 1/4"	1 1/8"	1/2"	5"	13 7/8"	3/4"	1 1/8"	2 1/4"
C	5"	2"	1 1/4"	2 3/4"	1 1/8"	5/8"	1/2"	1/4"	9/32"	1/2"	4"	3/16"	11/16"	5/8"	2 1/4"	1 1/8"	1/2"	5"	13 7/8"	3/4"	1 1/8"	2 1/4"
D	---	---	---	---	---	---	---	---	---	---	---	---	---	---	---	---	---	---	---	---	---	---
E	5"	2"	1 1/4"	2 3/4"	1 1/8"	5/8"	1/2"	1/4"	9/32"	1/2"	4"	3/16"	11/16"	5/8"	2 1/4"	1 1/8"	1/2"	5"	13 7/8"	3/4"	1 1/8"	2 1/4"
F	5"	2"	1 1/4"	2 3/4"	1 1/8"	3/4"	1/2"	1/4"	11/32"	1/2"	4"	1/4"	11/16"	5/8"	2 1/4"	1 1/8"	5/8"	5"	15 7/8"	3/4"	1 1/8"	2 1/4"
G	5"	2"	1 1/4"	2 3/4"	1 1/8"	3/4"	1/2"	1/4"	11/32"	1/2"	4"	1/4"	11/16"	5/8"	2 1/4"	1 1/8"	5/8"	5"	16"	3/4"	1 1/8"	2 1/4"
H	6"	2 1/4"	1 3/8"	3 1/2"	1 1/4"	7/8"	5/8"	1/4"	11/32"	1/2"	4"	3/8"	11/16"	5/8"	2 1/4"	1 1/8"	5/8"	6"	16 5/8"	7/8"	1 1/4"	2 1/2"
J	6"	2 1/4"	1 3/8"	3 1/2"	1 1/4"	7/8"	5/8"	1/4"	13/32"	1/2"	4"	3/8"	11/16"	5/8"	2 1/4"	1 1/8"	3/4"	6"	16 5/8"	7/8"	1 1/4"	2 1/2"
K	6"	2 1/4"	1 3/8"	3 1/2"	1 1/4"	7/8"	5/8"	1/4"	13/32"	5/8"	4"	7/16"	7/8"	3/4"	2 1/4"	1 1/8"	3/4"	6"	16 3/4"	7/8"	1 1/4"	2 1/2"
L	7"	2 3/4"	2"	4"	1 1/2"	1"	3/4"	5/16"	13/32"	5/8"	5"	7/16"	7/8"	3/4"	2 3/4"	1 3/8"	3/4"	7"	19 3/8"	3/4"	1 1/2"	3"
M	7"	2 3/4"	2"	4"	1 1/2"	1"	3/4"	5/16"	15/32"	5/8"	5"	7/16"	7/8"	3/4"	2 3/4"	1 3/8"	7/8"	7"	19 3/8"	3/4"	1 1/2"	3"
N	7"	2 3/4"	2"	4"	1 1/2"	1"	3/4"	5/16"	15/32"	5/8"	5"	7/16"	7/8"	3/4"	2 3/4"	1 3/8"	7/8"	7"	19 3/8"	3/4"	1 1/2"	3"
O	7"	2 3/4"	2"	4"	1 1/2"	1 1/8"	3/4"	5/16"	15/32"	5/8"	5 1/2"	7/16"	7/8"	3/4"	2 3/4"	1 3/8"	7/8"	7"	21 3/8"	3/4"	1 1/2"	3"
P	7"	2 3/4"	2"	4"	1 1/2"	1 1/8"	3/4"	5/16"	15/32"	5/8"	5 1/2"	7/16"	7/8"	3/4"	2 3/4"	1 3/8"	7/8"	7"	21 3/8"	3/4"	1 1/2"	3"
Q	---	---	---	---	---	---	---	---	---	---	---	---	---	---	---	---	---	---	---	---	---	---
R	5"	2"	1 1/4"	2 3/4"	1 1/8"	3/4"	1/2"	1/4"	11/32"	1/2"	4"	1/4"	11/16"	5/8"	2 1/4"	1 1/8"	5/8"	5"	15 7/8"	3/4"	1 1/8"	2 1/4"
S	5"	2"	1 1/4"	2 3/4"	1 1/8"	3/4"	1/2"	1/4"	11/32"	1/2"	4"	1/4"	11/16"	5/8"	2 1/4"	1 1/8"	5/8"	5"	16"	7/8"	1 1/8"	2 1/4"
T	6"	2 1/4"	1 3/8"	3 1/2"	1 1/4"	7/8"	5/8"	1/4"	13/32"	5/8"	4"	3/8"	7/8"	3/4"	2 1/4"	1 1/8"	3/4"	6"	16 5/8"	7/8"	1 1/4"	2 1/2"
U	6"	2 1/4"	1 3/8"	3 1/2"	1 1/4"	7/8"	5/8"	1/4"	13/32"	3/4"	4"	7/16"	1 1/16"	7/8"	2 1/4"	1 1/8"	3/4"	6"	16 3/4"	7/8"	1 1/4"	2 1/2"
V	6"	2 1/4"	1 3/8"	3 1/2"	1 1/4"	7/8"	5/8"	1/4"	13/32"	3/4"	5"	5/16"	1 1/16"	7/8"	2 3/4"	1 3/8"	3/4"	6"	18 1/4"	3/4"	1 1/4"	2 1/2"
W	7"	2 3/4"	2"	4"	1 1/2"	1"	3/4"	5/16"	15/32"	3/4"	5"	7/16"	1 1/16"	7/8"	2 3/4"	1 3/8"	7/8"	7"	19 3/8"	3/4"	1 1/2"	3"
X	7"	2 3/4"	2"	4"	1 1/2"	1"	3/4"	5/16"	15/32"	3/4"	5 1/2"	3/8"	1 1/16"	7/8"	2 3/4"	1 3/8"	7/8"	7"	21 1/4"	3/4"	1 1/2"	3"
Y	7"	2 3/4"	2"	4"	1 1/2"	1 1/8"	3/4"	5/16"	15/32"	3/4"	5 1/2"	7/16"	1 1/16"	7/8"	2 3/4"	1 3/8"	7/8"	7"	21 3/8"	3/4"	1 1/2"	3"
Z	7"	2 3/4"	2"	4"	1 1/2"	1 1/8"	3/4"	5/16"	17/32"	3/4"	6 3/4"	7/16"	1 1/16"	7/8"	3 1/2"	1 3/4"	1"	7"	19 1/2"	3/4"	1 1/2"	3"

SPECIFICATION REFERENCE	INTERSTATE SIGN STRUCTURE	VDOT
700	INSTALLATION DETAILS	ROAD AND BRIDGE STANDARDS
	VIRGINIA DEPARTMENT OF TRANSPORTATION	REVISION DATE / SHEET 8 OF 10
		1323.17

SSP-VIA

SIGN STRUCTURE TYPE VIA	SUPPORT																					
	BASE CONNECTION DATA TABLE									FUSE AND HINGE PLATE DATA TABLE							BOLT KEEPER PLATE DATA TABLE					
	A	B	C	D	E	T_1	T_2	W	R	BOLT DIA.	a	b	c	d	g	g/2	BOLT DIA.	A	B	C	D	E
AA	7"	2 3/4"	2"	4"	1 1/2"	1 1/8"	3/4"	5/16"	17/32"	3/4"	6"	7/16"	1 1/16"	7/8"	3 1/2"	1 3/4"	1"	7"	23 1/4"	3/4"	1 1/2"	3"
BB	7"	2 3/4"	2"	4"	1 1/2"	1 1/8"	3/4"	5/16"	17/32"	3/4"	6"	1/2"	1 1/16"	7/8"	3 1/2"	1 3/4"	1"	7"	23 3/8"	7/8"	1 1/2"	3"
CC	6"	2 1/4"	1 3/8"	3 1/2"	1 1/4"	7/8"	5/8"	1/4"	11/32"	5/8"	4"	3/8"	7/8"	3/4"	2 1/4"	1 1/8"	5/8"	6"	16 5/8"	7/8"	1 1/4"	2 1/2"
DD	6"	2 1/4"	1 3/8"	3 1/2"	1 1/4"	7/8"	5/8"	1/4"	13/32"	3/4"	5"	5/16"	1 1/16"	7/8"	2 3/4"	1 3/8"	3/4"	6"	18 1/4"	7/8"	1 1/4"	2 1/2"
EE	6"	2 1/4"	1 3/8"	3 1/2"	1 1/4"	7/8"	5/8"	1/4"	13/32"	3/4"	5"	5/16"	1 1/16"	7/8"	2 3/4"	1 3/8"	3/4"	6"	18 1/4"	3/4"	1 1/4"	2 1/2"
FF	7"	2 3/4"	2"	4"	1 1/2"	1"	3/4"	5/16"	15/32"	3/4"	5"	7/16"	1 1/16"	7/8"	2 3/4"	1 3/8"	7/8"	7"	19 3/8"	3/4"	1 1/2"	3"
GG	7"	2 3/4"	2"	4"	1 1/2"	1 1/8"	3/4"	5/16"	15/32"	3/4"	5 1/2"	7/16"	1 1/16"	7/8"	2 3/4"	1 3/8"	7/8"	7"	21 3/8"	3/4"	1 1/2"	3"
HH	7"	2 3/4"	2"	4"	1 1/2"	1 1/8"	3/4"	5/16"	17/32"	7/8"	5 1/2"	7/16"	1 1/4"	1"	2 3/4"	1 3/8"	1"	7"	21 3/8"	3/4"	1 1/2"	3"
JJ	7"	2 3/4"	2"	4"	1 1/2"	1 1/8"	3/4"	5/16"	17/32"	7/8"	6"	7/16"	1 1/4"	1"	3 1/2"	1 3/4"	1"	7"	23 1/4"	3/4"	1 1/2"	3"
KK	7"	2 3/4"	2"	4"	1 1/2"	1 1/8"	3/4"	5/16"	17/32"	7/8"	6"	1/2"	1 1/4"	1"	3 1/2"	1 3/4"	1"	7"	23 3/8"	3/4"	1 1/2"	3"
LL	8"	3"	2 1/4"	4 1/2"	1 3/4"	1 1/4"	3/4"	3/8"	17/32"	7/8"	6 1/2"	7/16"	1 1/4"	1"	3 1/2"	1 3/4"	1"	8"	26 5/8"	3/4"	1 3/4"	3 1/2"
MM	8"	3"	2 1/4"	4 1/2"	1 3/4"	1 1/4"	3/4"	3/8"	17/32"	7/8"	6 1/2"	7/16"	1 1/4"	1"	3 1/2"	1 3/4"	1"	8"	26 5/8"	3/4"	1 3/4"	3 1/2"
NN	8"	3"	2 1/4"	4 1/2"	1 3/4"	1 1/4"	3/4"	3/8"	19/32"	7/8"	6 1/2"	7/16"	1 1/4"	1"	3 1/2"	1 3/4"	1 1/8"	8"	26 5/8"	3/4"	1 3/4"	3 1/2"
OO	5"	2"	1 1/4"	2 3/4"	1 1/8"	3/4"	1/2"	1/4"	11/32"	5/8"	4"	1/4"	7/8"	3/4"	2 1/4"	1 1/8"	5/8"	5"	16"	3/4"	1 1/8"	2 1/4"
PP	6"	2 1/4"	1 3/8"	3 1/2"	1 1/4"	7/8"	5/8"	1/4"	13/32"	3/4"	4"	3/8"	1 1/16"	7/8"	2 1/4"	1 1/8"	3/4"	6"	16 5/8"	7/8"	1 1/4"	2 1/2"
QQ	6"	2 1/4"	1 3/8"	3 1/2"	1 1/8"	7/8"	5/8"	1/4"	13/32"	3/4"	4"	7/16"	1 1/16"	7/8"	2 1/4"	1 1/8"	3/4"	6"	16 3/4"	7/8"	1 1/4"	2 1/2"
RR	7"	2 3/4"	2"	4"	1 1/2"	1"	3/4"	5/16"	13/32"	3/4"	5"	7/16"	1 1/16"	7/8"	2 3/4"	1 3/8"	3/4"	7"	19 3/8"	3/4"	1 1/2"	3"
SS	7"	2 3/4"	2"	4"	1 1/2"	1"	3/4"	5/16"	15/32"	3/4"	5"	7/16"	1 1/16"	7/8"	2 3/4"	1 3/8"	7/8"	7"	19 3/8"	3/4"	1 1/2"	3"
TT	7"	2 3/4"	2"	4"	1 1/2"	1 1/8"	3/4"	5/16"	15/32"	3/4"	5 1/2"	7/16"	1 1/16"	7/8"	2 3/4"	1 3/8"	7/8"	7"	21 3/8"	3/4"	1 1/2"	3"
UU	7"	2 3/4"	2"	4"	1 1/2"	1 1/8"	3/4"	5/16"	15/32"	3/4"	5 1/2"	7/16"	1 1/16"	7/8"	2 3/4"	1 3/8"	7/8"	7"	21 3/8"	3/4"	1 1/2"	3"
VV	7"	2 3/4"	2"	4"	1 1/2"	1 1/8"	3/4"	5/16"	17/32"	3/4"	6"	7/16"	1 1/16"	7/8"	3 1/2"	1 3/4"	1"	7"	23 1/4"	3/4"	1 1/2"	3"
WW	7"	2 3/4"	2"	4"	1 1/2"	1 1/8"	3/4"	5/16"	17/32"	3/4"	6"	7/16"	1 1/16"	7/8"	3 1/2"	1 3/4"	1"	7"	23 1/4"	3/4"	1 1/2"	3"
XX	7"	2 3/4"	2"	4"	1 1/2"	1 1/4"	3/4"	5/16"	17/32"	3/4"	6"	1/2"	1 1/16"	7/8"	3 1/2"	1 3/4"	1"	7"	23 3/8"	3/4"	1 1/2"	3"
YY	8"	3"	2 1/4"	4 1/2"	1 3/4"	1 1/4"	3/4"	3/8"	17/32"	3/4"	6 1/2"	7/16"	1 1/16"	7/8"	3 1/2"	1 3/4"	1"	8"	26 5/8"	3/4"	1 3/4"	3 1/2"
ZZ	7"	2 3/4"	2"	4"	1 1/2"	1"	3/4"	5/16"	15/32"	7/8"	6 1/2"	7/16"	1 1/4"	1"	2 3/4"	1 3/8"	7/8"	7"	19 3/8"	3/4"	1 1/2"	3"

VDOT
ROAD AND BRIDGE STANDARDS

SHEET 9 OF 10

REVISION DATE

1323.18

INTERSTATE SIGN STRUCTURE

INSTALLATION DETAILS

VIRGINIA DEPARTMENT OF TRANSPORTATION

SPECIFICATION REFERENCE

700

SSP-VIA

SIGN STRUCTURE TYPE VIA	SUPPORT																					
	BASE CONNECTION DATA TABLE									FUSE AND HINGE PLATE DATA TABLE							BOLT KEEPER PLATE DATA TABLE					
	A	B	C	D	E	T_1	T_2	W	R	BOLT DIA.	a	b	c	d	g	g/2	BOLT DIA.	A	B	C	D	E
AB	7"	2¾"	2"	4"	1½"	1"	¾"	5/16"	15/32"	⅞"	5½"	⅜"	1¼"	1"	2¾"	1⅜"	⅞"	7"	21¼"	¾"	1½"	3"
AC	7"	2¾"	2"	4"	1½"	1⅛"	¾"	5/16"	15/32"	⅞"	5½"	7/16"	1¼"	1"	2¾"	1⅜"	⅞"	7"	21⅜"	¾"	1½"	3"
AD	7"	2¾"	2"	4"	1½"	1⅛"	¾"	5/16"	17/32"	1"	6¾"	7/16"	1 7/16"	1⅛"	3½"	1¾"	1"	7"	19½"	¾"	1½"	3"
AE	7"	2¾"	2"	4"	1½"	1⅛"	¾"	5/16"	17/32"	1"	6¾"	½"	1 7/16"	1⅛"	3½"	1¾"	1"	7"	21½"	¾"	1½"	3"
AF	7"	2¾"	2"	4"	1½"	1¼"	¾"	5/16"	19/32"	1"	7"	½"	1 7/16"	1⅛"	3½"	1¾"	1⅛"	7"	23⅜"	¾"	1½"	3"
AG	8"	3"	2¼"	4½"	1¾"	1¼"	¾"	⅜"	19/32"	1"	6½"	7/16"	1 7/16"	1⅛"	3½"	1¾"	1⅛"	8"	26⅝"	¾"	1¾"	3½"
AH	7"	2¾"	2"	4"	1½"	1⅛"	¾"	5/16"	17/32"	⅞"	6"	7/16"	1¼"	1"	3½"	1¾"	1"	7"	23¼"	¾"	1½"	3"
AJ	7"	2¾"	2"	4"	1½"	1⅛"	¾"	5/16"	17/32"	⅞"	6"	7/16"	1¼"	1"	3½"	1¾"	1"	7"	23¼"	¾"	1½"	3"
AK	7"	2¾"	2"	4"	1½"	1¼"	¾"	5/16"	17/32"	⅞"	6"	½"	1¼"	1"	3½"	1¾"	1"	7"	23⅜"	¾"	1½"	3"
AL	7"	2¾"	2"	4"	1½"	1⅛"	¾"	5/16"	17/32"	⅞"	5½"	7/16"	1¼"	1"	2¾"	1⅜"	1"	7"	21⅜"	¾"	1½"	3"
AM	7"	2¾"	2"	4"	1½"	1⅛"	¾"	5/16"	17/32"	⅞"	6"	7/16"	1¼"	1"	3½"	1¾"	1"	7"	23¼"	¾"	1½"	3"
AN	7"	2¾"	2"	4"	1½"	1¼"	¾"	5/16"	17/32"	⅞"	6"	½"	1¼"	1"	3½"	1¾"	1"	7"	23⅜"	¾"	1½"	3"
AO	8"	3"	2¼"	4½"	1¾"	1¼"	¾"	⅜"	19/32"	1⅛"	6½"	7/16"	1⅝"	1¼"	3½"	1¾"	1⅛"	8"	26⅝"	¾"	1¾"	3½"
AP	7"	2¾"	2"	4"	1¾"	1⅛"	¾"	5/16"	17/32"	⅞"	7"	½"	1¼"	1"	3½"	1¾"	1"	7"	21½"	¾"	1½"	3"
AQ	7"	2¾"	2"	4"	1½"	1⅛"	¾"	5/16"	17/32"	⅞"	6"	7/16"	1¼"	1"	3½"	1¾"	1"	7"	23¼"	¾"	1½"	3"
AR	7"	2¾"	2"	4"	1½"	1¼"	¾"	5/16"	17/32"	1"	6"	½"	1 7/16"	1⅛"	3½"	1¾"	1"	7"	23⅜"	¾"	1½"	3"
AS	8"	3"	2¼"	4½"	1¾"	1¼"	¾"	⅜"	17/32"	1"	6½"	7/16"	1 7/16"	1⅛"	3½"	1¾"	1"	8"	26⅝"	¾"	1¾"	3½"
AT	8"	3"	2¼"	4½"	1¾"	1¼"	¾"	⅜"	17/32"	1"	6½"	7/16"	1 7/16"	1⅛"	3½"	1¾"	1"	8"	26⅝"	¾"	1¾"	3½"
AU	7"	2¾"	2"	4"	1½"	1¼"	¾"	5/16"	19/32"	1⅛"	6"	½"	1⅝"	1¼"	3½"	1¾"	1⅛"	7"	23⅜"	¾"	1½"	3"
AV	8"	3"	2¼"	4½"	1¾"	1¼"	¾"	⅜"	19/32"	1⅛"	6½"	7/16"	1⅝"	1¼"	3½"	1¾"	1⅛"	8"	26⅝"	¾"	1¾"	3½"
AW	7"	2¾"	2"	4"	1½"	1⅛"	¾"	5/16"	17/32"	1"	6"	7/16"	1 7/16"	1⅛"	3½"	1¾"	1"	7"	23¼"	¾"	1½"	3"
AX	7"	2¾"	2"	4"	1½"	1⅛"	¾"	5/16"	17/32"	1"	6"	½"	1 7/16"	1⅛"	3½"	1¾"	1"	7"	23⅜"	¾"	1½"	3"
AY	7"	2¾"	2"	4"	1½"	1⅛"	¾"	⅜"	17/32"	1"	6½"	7/16"	1 7/16"	1⅛"	3½"	1¾"	1"	7"	26⅝"	¾"	1½"	3"
AZ	8"	3"	2¼"	4½"	1¾"	1¼"	¾"	⅜"	17/32"	1"	6½"	7/16"	1 7/16"	1⅛"	3½"	1¾"	1"	8"	26⅝"	¾"	1¾"	3½"
BC	8"	3"	2¼"	4½"	1¾"	1¼"	¾"	⅜"	17/32"	1"	6½"	7/16"	1 7/16"	1⅛"	3½"	1¾"	1"	8"	26⅝"	¾"	1¾"	3½"
BD	8"	3"	2¼"	4½"	1¾"	1¼"	¾"	⅜"	19/32"	1⅛"	6½"	7/16"	1⅝"	1¼"	3½"	1¾"	1⅛"	8"	26⅝"	¾"	1¾"	3½"

SPECIFICATION REFERENCE	INTERSTATE SIGN STRUCTURE	VDOT ROAD AND BRIDGE STANDARDS
700	INSTALLATION DETAILS VIRGINIA DEPARTMENT OF TRANSPORTATION	REVISION DATE SHEET 10 OF 10 1323.19

OSS-1

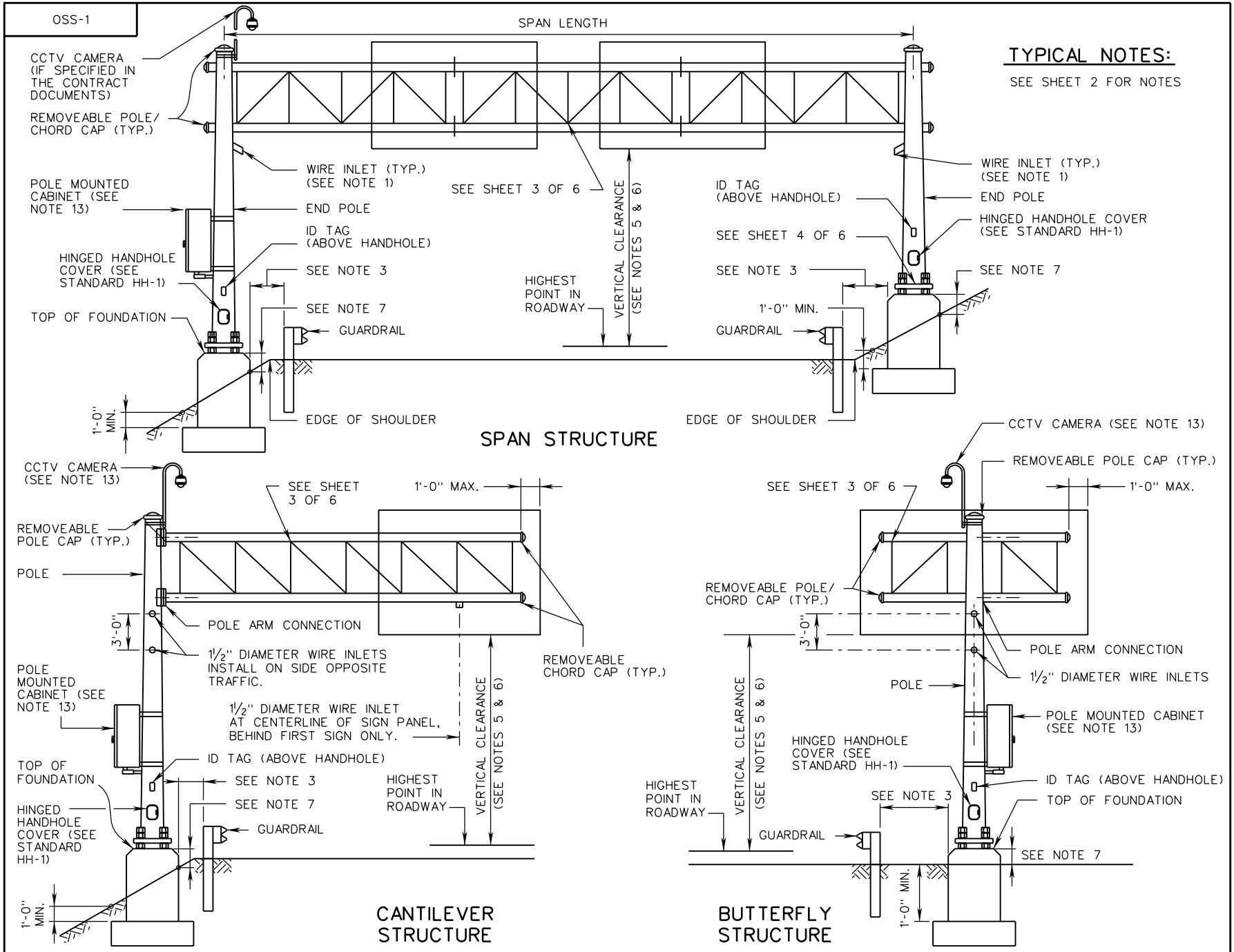

TYPICAL NOTES:

SEE SHEET 2 FOR NOTES

VDOT ROAD AND BRIDGE STANDARDS	A COPY OF THE ORIGINAL SEALED AND SIGNED DRAWING IS ON FILE IN THE CENTRAL OFFICE.	SPECIFICATION REFERENCE
SHEET 1 OF 7	# OVERHEAD SIGN STRUCTURE	700
1324.10	TYPICAL DETAILS	
REVISION DATE 04/19	VIRGINIA DEPARTMENT OF TRANSPORTATION	

OSS-1

TYPICAL NOTES:

SEE SHEET 1 FOR DETAILS

1. 1 ½" DIAMETER WIRE INLETS SHALL BE PROVIDED AT THE FOLLOWING LOCATIONS:
   A. ON SPAN STRUCTURES ON THE FRONT LEG OF END POLE 12" BELOW BOTTOM CHORD.
   B. ON CANTILEVER AND BUTTERFLY STRUCTURES ON POLE 12" BELOW BOTTOM CHORD.
   C. ON SPAN STRUCTURES ON THE UNDERSIDE OF THE BOTTOM CHORD AT CENTERLINE BEHIND FIRST SIGN PANEL FROM EACH END POLE.
   D. ON CANTILEVER AND BUTTERFLY STRUCTURES ON THE UNDERSIDE OF THE BOTTOM CHORD AT CENTERLINE BEHIND FIRST SIGN PANEL FROM POLE.
2. ALL UNUSED WIRE INLETS SHALL BE CAPPED WATER TIGHT.
3. OVERHEAD SIGN STRUCTURE POLES SHALL BE LOCATED SUCH THAT THE NEAR SIDE EDGE OF THE FOUNDATION IS OUTSIDE OF THE GUARDRAIL DEFLECTION DISTANCE.
4. NO MORTAR, GROUT, OR CONCRETE SHALL BE PLACED BETWEEN BOTTOM OF BASE PLATE AND TOP OF PEDESTAL.
5. VERTICAL CLEARANCE FOR OVERHEAD SIGN STRUCTURES SHALL BE AS FOLLOWS:
   A. CANTILEVER OR SPAN SIGN STRUCTURE:
      17'-6" FROM BOTTOM OF LOWEST LUMINAIRE ASSEMBLY (OR BOTTOM OF SIGN PANEL IF NO SIGN LIGHTING IS PRESENT) TO HIGHEST POINT OF THE TRAVEL LANES OR SHOULDER.
   B. BUTTERFLY SIGN STRUCTURE THAT OVERHANGS THE TRAVEL LANE, SHOULDER OR MEDIAN:
      17'-6" FROM BOTTOM OF LUMINAIRE ASSEMBLY (OR BOTTOM OF SIGN PANEL IF NO SIGN LIGHTING IS PRESENT) TO THE HIGHEST POINT OF THE PORTION OF THE ROAD SURFACE OR MEDIAN THAT IS UNDERNEATH THAT SIGN.
   C. BUTTERFLY SIGN STRUCTURE THAT DOES NOT OVERHANG THE TRAVEL LANE, SHOULDER OR MEDIAN:
      14'-6" FROM BOTTOM OF LUMINAIRE ASSEMBLY (OR BOTTOM OF SIGN PANEL IF NO SIGN LIGHTING IS PRESENT) TO THE HIGHEST POINT OF THE ROAD SURFACE FOR THE TRAVEL LANES OR SHOULDER IN THAT DIRECTION OF TRAVEL.
6. ALL SIGN PANELS SHALL BE A MAXIMUM OF 21'-0" FROM THE BOTTOM OF SIGN PANELS TO THE HIGHEST POINT OF THE TRAVEL LANE OR SHOULDER FOR THAT DIRECTION OF TRAVEL.
7. TOP OF FOUNDATIONS SHALL BE 2'-0" MINIMUM ABOVE FINISHED GRADE. FOR FOUNDATIONS ADJACENT OR WITHIN A SIDEWALK, TOP OF FOUNDATIONS SHALL BE A MINIMUM OF 3" ABOVE FINISHED GRADE.
8. FOUNDATIONS SHALL NOT BE LOCATED IN THE BASE OR SIDES OF DRAINAGE DITCHES.
9. EACH HORIZONTAL CHORD SHALL BE ATTACHED TO A POLE.
10. SEE STANDARD HH-1 FOR HANDHOLE DETAILS.
11. SEE STANDARD VS-1 FOR VARMINT SCREEN DETAILS.
12. A "J" HOOK FOR WIRE SUPPORT SHALL BE PLACED NEAR ALL HANDHOLES THAT ARE LOCATED MORE THAN 4 FEET UP THE STRUCTURE.
13. ALL SIGN STRUCTURES SHALL BE DESIGNED TO SUPPORT THE FUTURE ADDITION OF ONE CCTV CAMERA AT THE TOP CORNER OF ONE COLUMN, AND THE FUTURE ADDITION OF ONE 500-POUND POLE MOUNTED CABINET ATTACHED TO ONE COLUMN, UNLESS SUCH DEVICES ARE ALREADY REQUIRED IN THE CONTRACT DOCUMENTS. SEE STANDARD MP-3 FOR CCTV CAMERA DEAD LOAD AND SURFACE AREA REQUIREMENTS.

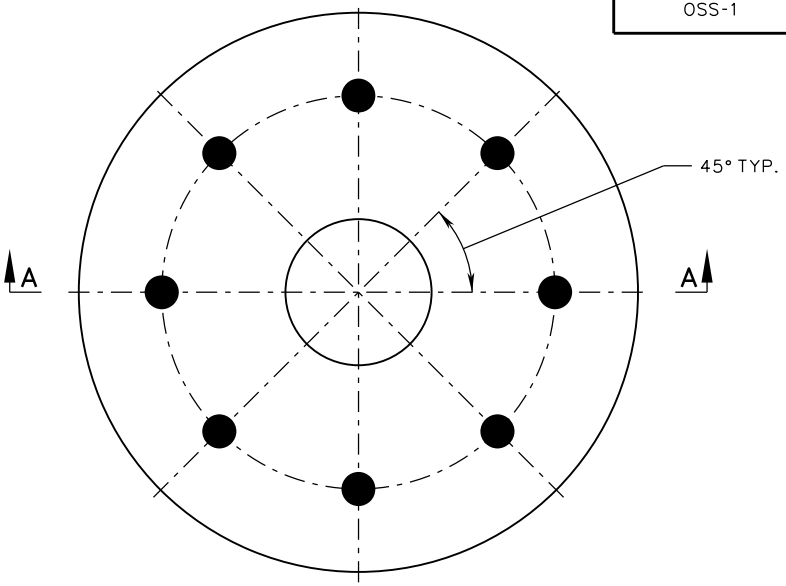

PLAN FOR SINGLE POLE SUPPORT

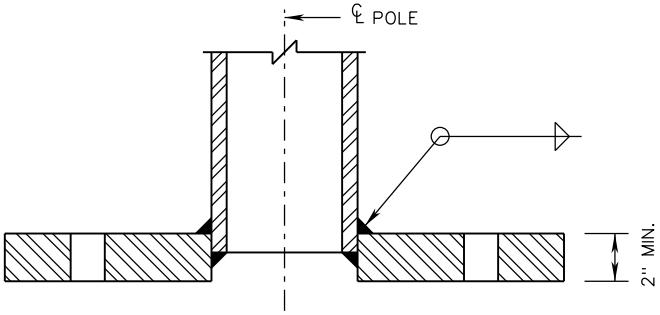

SECTION A-A

TYPICAL SOCKETED BASE PLATE CONNECTION

NOTES:

1. ALL OVERHEAD SIGN STRUCTURES HAVING A SINGLE POLE, OR A SINGLE POLE AT EACH END, SHALL HAVE A MINIMUM OF EIGHT (8) TWO-INCH DIAMETER (MINIMUM) ANCHOR BOLTS. STRUCTURES WITH MORE THAN ONE POLE AT EACH END SHALL HAVE A MINIMUM OF FOUR (4) TWO-INCH DIAMETER (MINIMUM) ANCHOR BOLTS PER POLE.
2. ALL END POLE COLUMNS SHALL BE JOINED TO THE BASE PLATE USING A SOCKETED CONNECTION OR FULL PENETRATION GROOVE WELD WITH A BACKING RING.
3. SEE STANDARD AB-1 FOR TYPICAL ANCHOR BOLT DETAILS.

SPECIFICATION REFERENCE	A COPY OF THE ORIGINAL SEALED AND SIGNED DRAWING IS ON FILE IN THE CENTRAL OFFICE.	VDOT ROAD AND BRIDGE STANDARDS	
700	OVERHEAD SIGN STRUCTURE TYPICAL NOTES AND SOCKETED BASE PLATE CONNECTION VIRGINIA DEPARTMENT OF TRANSPORTATION	REVISION DATE 04/19	SHEET 2 OF 7 1324.11

OSS-1

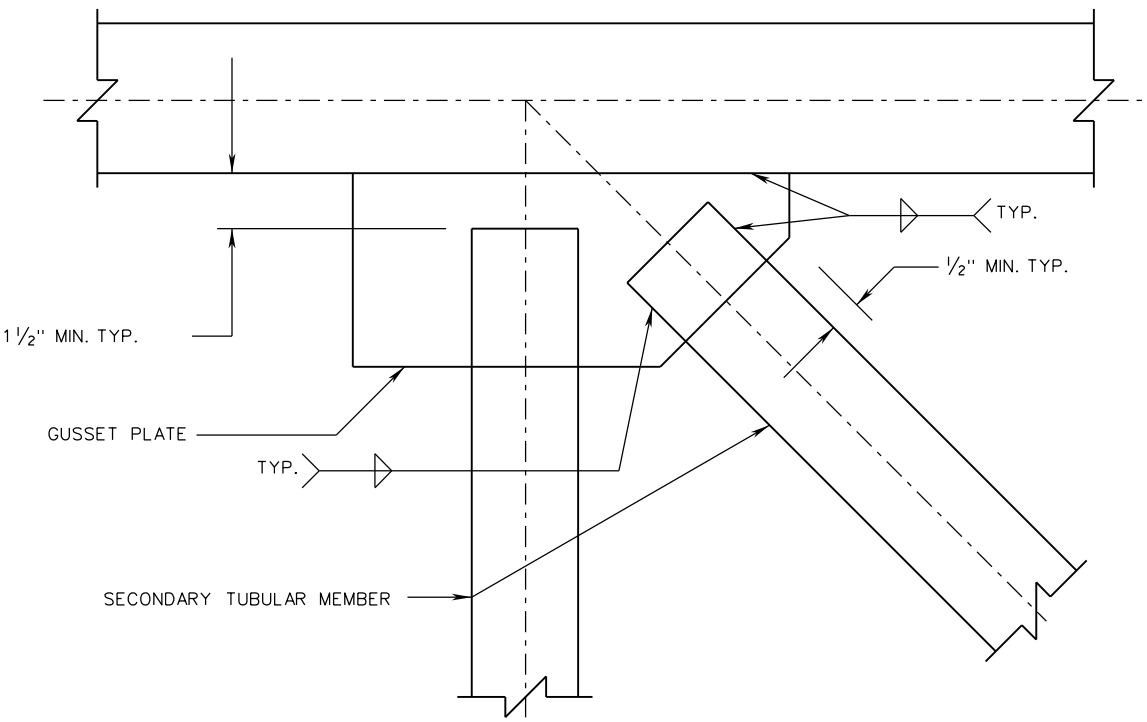

TYPICAL GUSSET PLATE CONNECTION

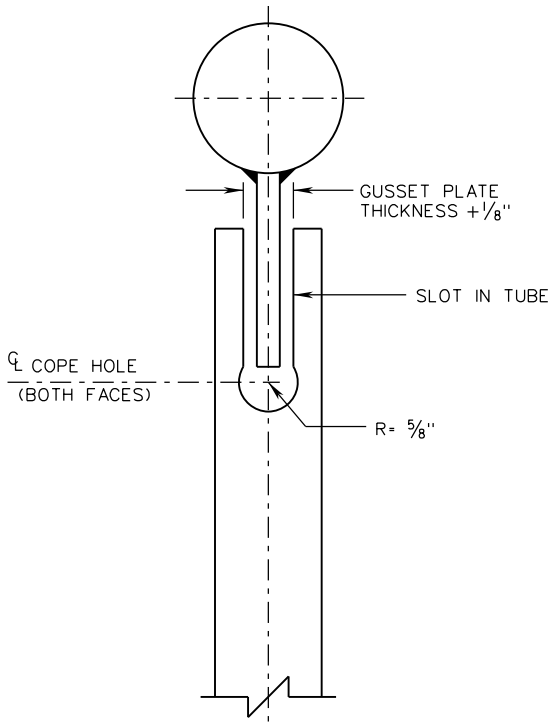

SECTION VIEW

NOTES:

1. ALL SECONDARY MEMBERS IN BOTH TUBULAR AND NON-TUBULAR STUCTURES IN THE OVERHEAD TRUSS AND THE END POLE SUPPORTS SHALL BEJOINED TO PRIMARY MEMBERS USING A GUSSET CONNECTION PLATE.
2. CONTRACTOR SHALL SPECIFY THE WIDTH, LENGTH, AND THICKNESS OF GUSSET PLATE.
3. CONTRACTOR SHALL SPECIFY THE MINIMUM WELD SIZE AND LENGTH OF WELD.
4. COPE HOLES TO BE PROVIDED AT BOTH ENDS AND BOTH FACES OF ALL SECONDARY MEMBER CONNECTIONS.

VDOT ROAD AND BRIDGE STANDARDS	A COPY OF THE ORIGINAL SEALED AND SIGNED DRAWING IS ON FILE IN THE CENTRAL OFFICE.		SPECIFICATION REFERENCE
SHEET 3 OF 7	OVERHEAD SIGN STRUCTURE	REVISION DATE 09/18	700
1324.12	GUSSET PLATE CONNECTION		
	VIRGINIA DEPARTMENT OF TRANSPORTATION		

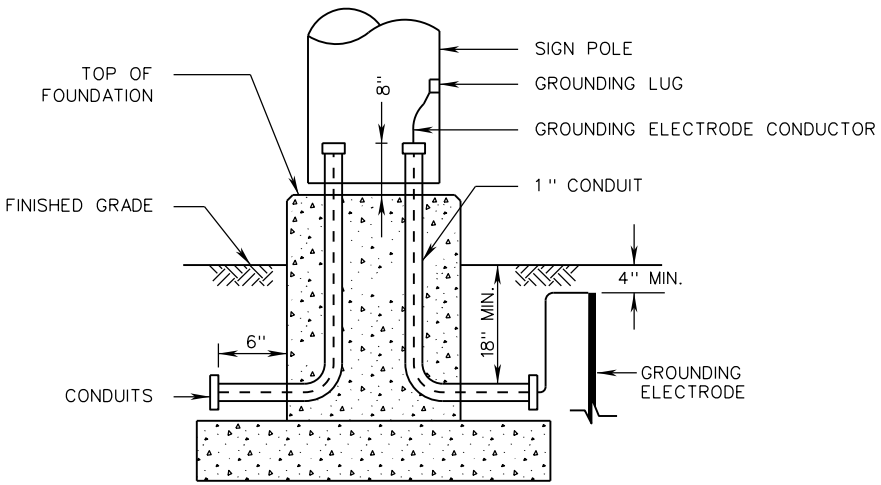

TYPICAL SIGN FOOTING DETAIL WITH CONDUIT

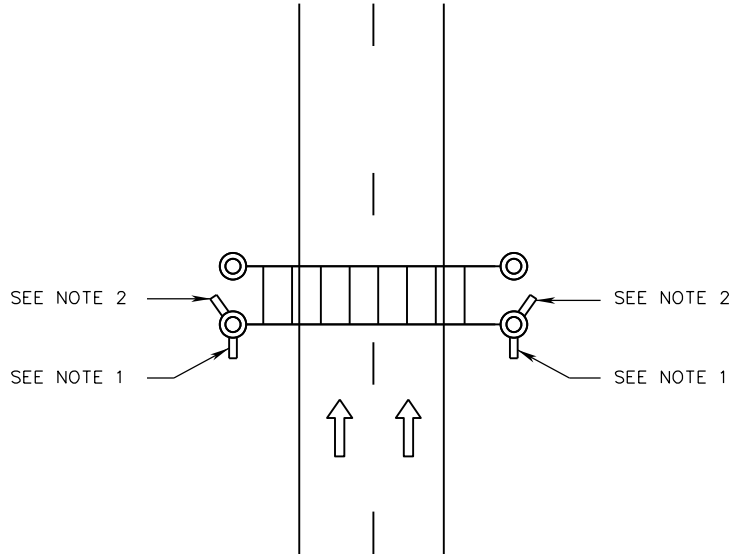

LOCATION OF FUTURE USE CONDUITS FOR DOUBLE END POLE STRUCTURES

NOTES:

1. FUTURE USE CONDUITS PLACED PARALLEL TO THE ROADWAY.
2. FUTURE USE CONDUITS PLACED AT AN ANGLE TO MISS THE BACK FOUNDATION OR ANCHOR BOLTS IN A SPREAD FOOTING FOUNDATION.
3. THE TYPE, SIZE, NUMBER AND ORIENTATION OF CONDUITS ENTERING AND EXITING FOOTINGS MAY VARY PER SIGN LOCATION.
4. IN ADDITION TO THE CONDUITS SPECIFIED ON THE PLANS, ONE - 1" CONDUIT REQUIRED FOR GROUND WIRE AND TWO - 2" PVC HEAVY WALL CONDUITS REQUIRED FOR FUTURE USE. FUTURE USE CONDUITS SHALL BE STUBBED OUT AND CAPPED. FUTURE USE CONDUITS SHALL BE ORIENTED TO RUN PARALLEL TO THE ROADWAY. FOR LOCATION OF FUTURE USE CONDUITS IN FOUNDATIONS FOR DOUBLE END POLE STRUCTURES, SEE DRAWING AT RIGHT.
5. EACH FOUNDATION SHALL BE PERMANENTLY MARKED TO INDICATE ALL SIDES FROM WHICH CONDUITS PASS. THIS MARK SHALL BE MADE WITH A TROWEL WHEN FINISHING THE CONCRETE AND SHALL BE 1/4" DEEP AND 4" TO 6" LONG. LOCATIONS OF EMPTY CONDUITS SHALL HAVE AN ADDITIONAL 2" LONG MARK MADE PERPENDICULAR TO AND CENTERED ON THIS MARK.
6. NO MORTAR, GROUT, OR CONCRETE SHALL BE PLACED BETWEEN BOTTOM OF BASE PLATE AND TOP OF FOUNDATION.

SPECIFICATION REFERENCE	A COPY OF THE ORIGINAL SEALED AND SIGNED DRAWING IS ON FILE IN THE CENTRAL OFFICE.	VDOT ROAD AND BRIDGE STANDARDS	
700	OVERHEAD SIGN STRUCTURE CONDUIT DETAILS VIRGINIA DEPARTMENT OF TRANSPORTATION	REVISION DATE 09/18	SHEET 4 OF 7 1324.13

OSS-1

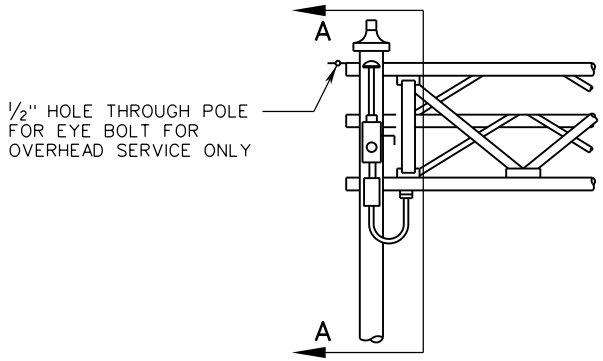

FRONT VIEW

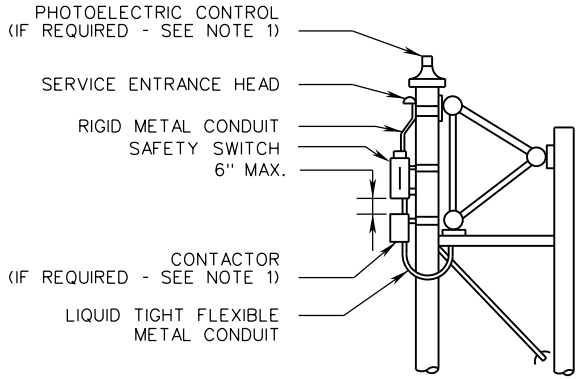

SECTION A-A

SPAN SIGN STRUCTURE

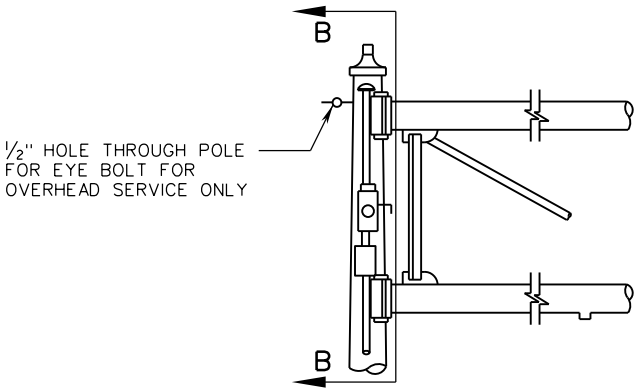

FRONT VIEW

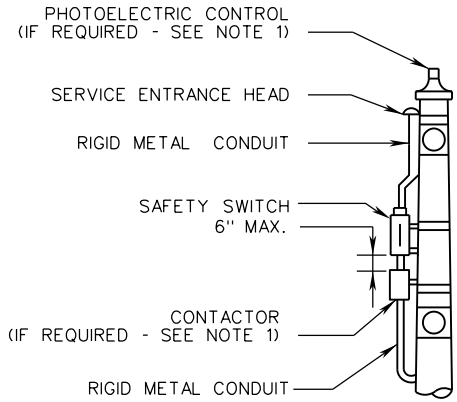

SECTION B-B

CANTILEVER SIGN STRUCTURE

NOTES:

1. A SAFETY SWITCH SHALL BE INSTALLED ON ALL SIGN STRUCTURES REQUIRING ELECTRICAL POWER. ELECTRICAL SERVICE FOR SIGN STRUCTURES NOT CONTROLLED BY A CONTROL CENTER SHALL HAVE A PHOTOCELL AND A PHOTOCELL CONTROLLED CONTACTOR TO CONTROL THE ELECTRICAL POWER TO LUMINAIRES. THE CONTACTOR SHALL BE IN A NEMA 3R ENCLOSURE.

2. ALL CONDUIT LOCATED IN OR ON OVERHEAD SIGN STRUCTURE SHALL BE ¾" MINIMUM.

VDOT ROAD AND BRIDGE STANDARDS		A COPY OF THE ORIGINAL SEALED AND SIGNED DRAWING IS ON FILE IN THE CENTRAL OFFICE.	SPECIFICATION REFERENCE
SHEET 5 OF 7	REVISION DATE	OVERHEAD SIGN STRUCTURE ELECTRICAL DETAILS FOR SIGN LIGHTING	700
1324.14	09/18	VIRGINIA DEPARTMENT OF TRANSPORTATION	

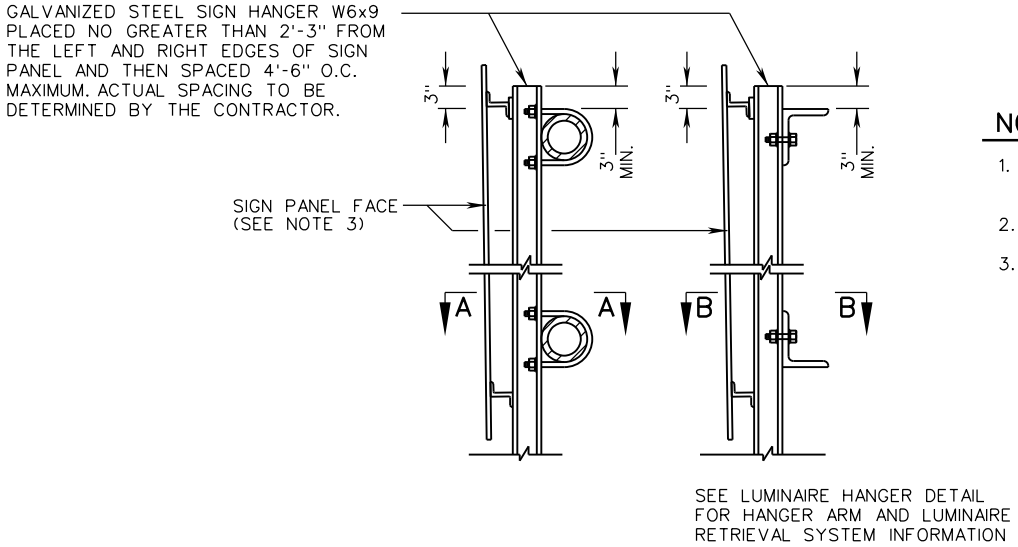

ROUND CHORD DETAIL

ANGLE CHORD DETAIL

NOTES:

1. ISOLATION WASHER OR GASKET SHALL BE PROVIDED BETWEEN ALUMINUM AND STEEL SURFACES.
2. SIGN PANELS SHALL BE STANDARD SPD-1 OR SPD-2.
3. TOP OF SIGN SHALL BE TILTED TOWARDS TRAFFIC USING SHIMS, WELDING A SHORT PIECE OF W6x9 OR WT3X4.5 TO THE VERTICAL SIGN HANGER, OR BY AN OTHER APPROVED METHOD SO THAT THE SIGN FACE IS APPROXIMATELY 3° FROM VERTICAL.

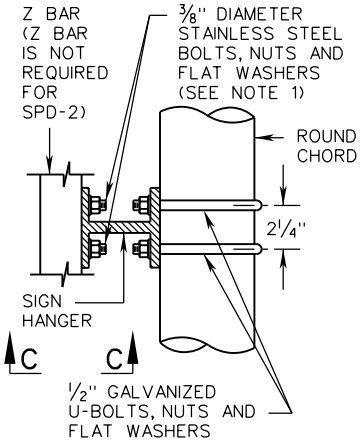

SECTION A-A
ROUND CHORD

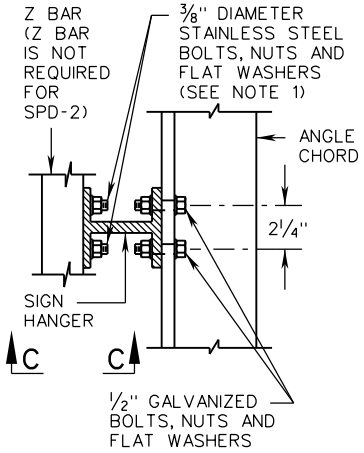

SECTION B-B
ANGLE CHORD

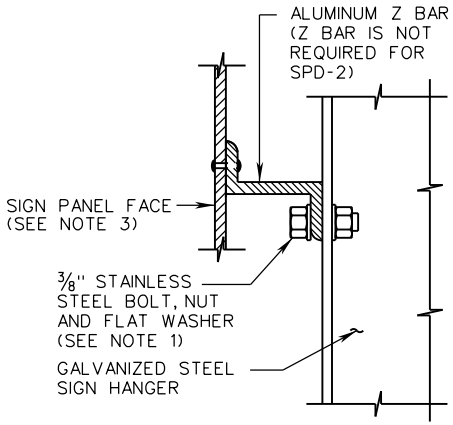

SECTION C-C

SPECIFICATION REFERENCE	A COPY OF THE ORIGINAL SEALED AND SIGNED DRAWING IS ON FILE IN THE CENTRAL OFFICE.	VDOT ROAD AND BRIDGE STANDARDS	
700	OVERHEAD SIGN STRUCTURE SIGN HANGER DETAILS VIRGINIA DEPARTMENT OF TRANSPORTATION	REVISION DATE 09/18	SHEET 6 OF 7 1324.15

OSS-1

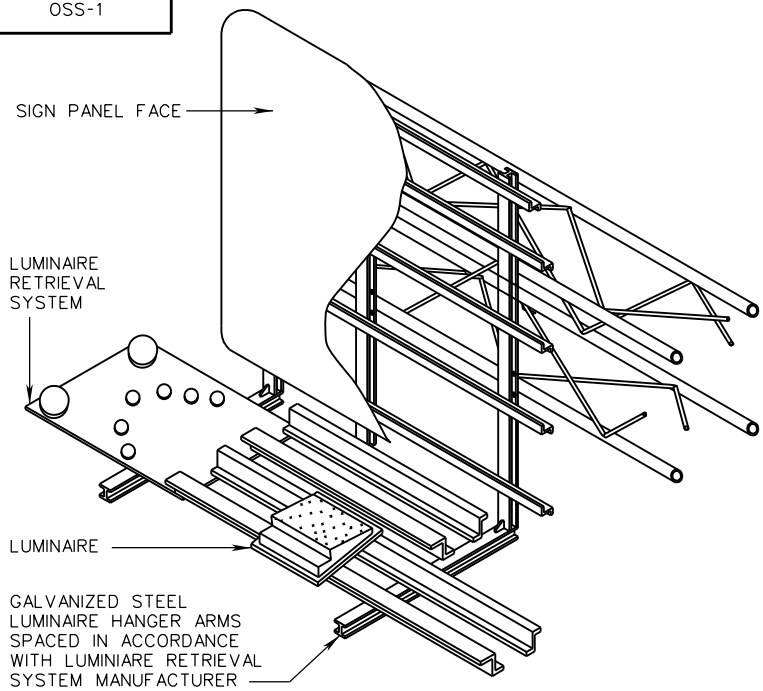

SIGN HANGER ERECTION DETAIL
(WITH LUMINAIRE RETRIEVAL SYSTEM)

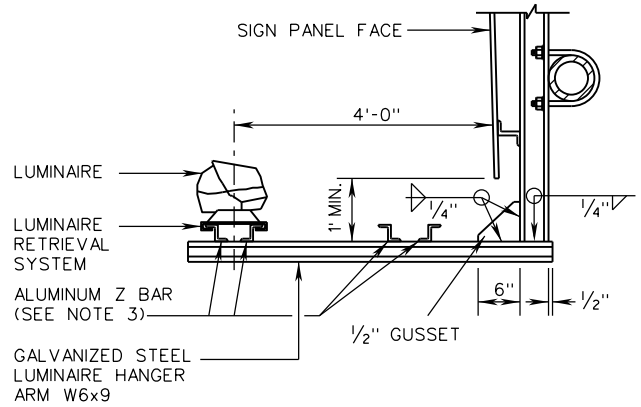

LUMINAIRE HANGER DETAIL
(WITH LUMINAIRE RETRIEVAL SYSTEM)

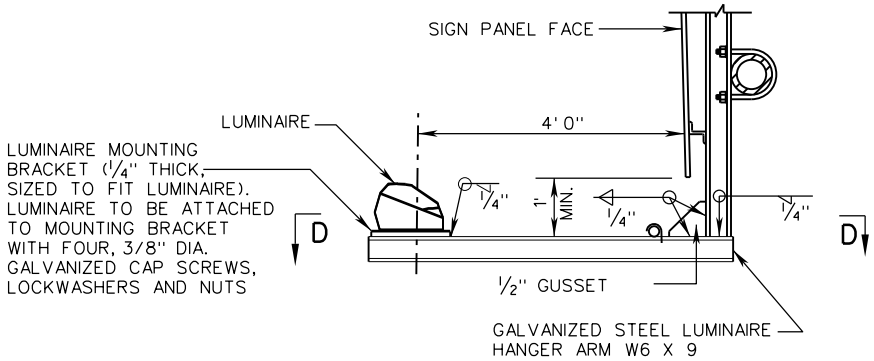

LUMINAIRE HANGER DETAIL
(WITHOUT LUMINAIRE RETRIEVAL SYSTEM)

NOTES:

1. LUMINAIRE RETRIEVAL SYSTEM, WHERE REQUIRED IN THE CONTRACT DOCUMENTS, SHALL BE DESIGNED FOR THE NUMBER OF LUMINAIRES INDICATED IN THE CONTRACT DOCUMENTS. SPACING OF HANGERS USED TO SUPPORT THE RETRIEVAL SYSTEM SHALL BE IN ACCORDANCE WITH MANUFACTURER'S RECOMMENDATIONS. TURNTABLE END SHALL BE OF SUFFICIENT LENGTH TO ALIGN WITH THE VERTICAL EDGE OF THE OUTSIDE PAVED SHOULDER (+6") OR SHALL BE EXTENDED 5 FEET BEYOND THE VERTICAL EDGE (+6") OF THE OUTERMOST SIGN LUMINAIRE, WHICHEVER IS GREATER. THE OPPOSITE END OF THE RETRIEVAL SYSTEM SHALL EXTEND A MINIMUM OF 6 INCHES PAST THE OUTERMOST VERTICAL EDGE OF THE SIGN HANGER ARM.
2. LUMINAIRES, WHERE REQUIRED IN THE CONTRACT DOCUMENTS, SHALL BE INSTALLED AND AIMED AS PER MANUFACTURER'S RECOMMENDATIONS.
3. ISOLATION WASHER OR GASKET SHALL BE PROVIDED BETWEEN ALUMINUM AND STEEL SURFACES.

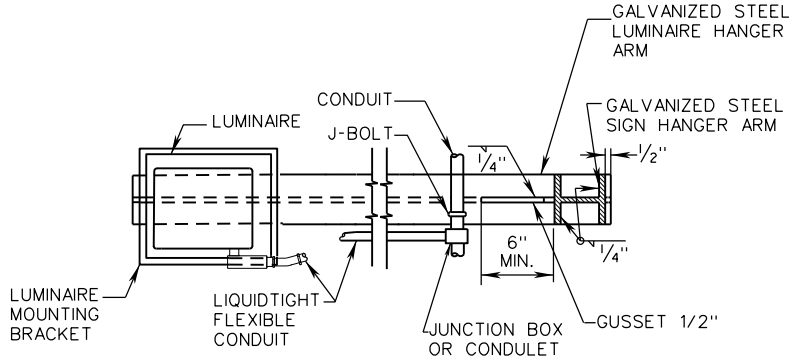

SECTION D-D

VDOT ROAD AND BRIDGE STANDARDS	A COPY OF THE ORIGINAL SEALED AND SIGNED DRAWING IS ON FILE IN THE CENTRAL OFFICE.		SPECIFICATION REFERENCE
SHEET 7 OF 7	OVERHEAD SIGN STRUCTURE		
1324.16	LUMINAIRE HANGER DETAILS	REVISION DATE 09/18	700
	VIRGINIA DEPARTMENT OF TRANSPORTATION		

SPD-1

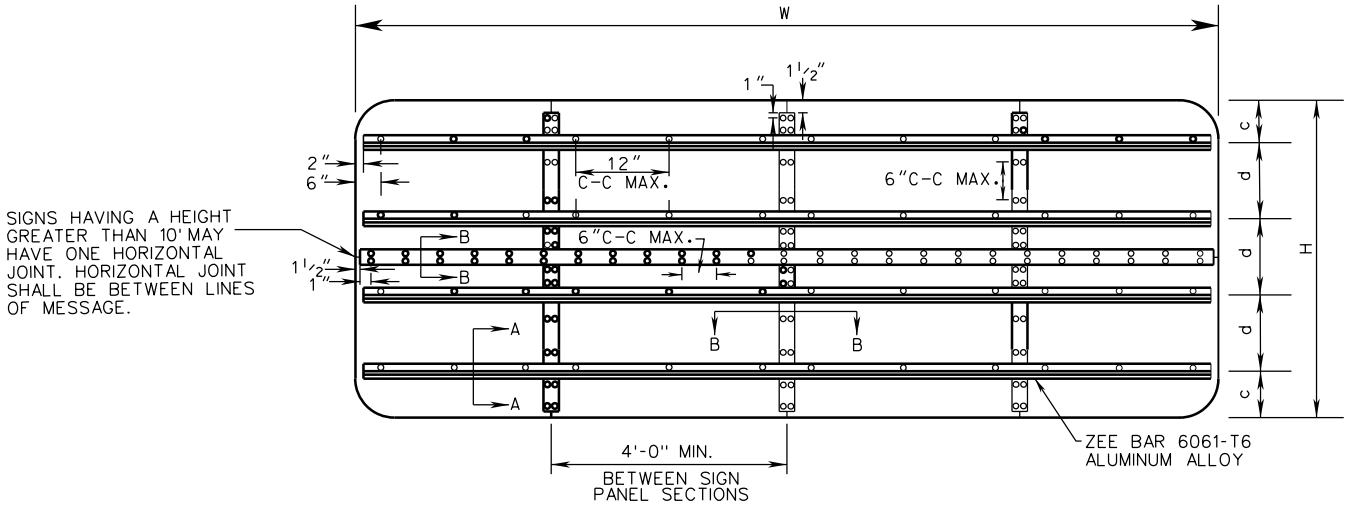

NOTE:
DIMENSIONS "C" AND "D" ARE MEASURED TO CENTER OF RIVET OR CARRIAGE BOLT

SECTION A-A

ALL INSTALLATIONS EXCEPT TOP AND BOTTOM ZEE BARS ON OVERHEAD SIGNS

3/16" DIAMETER RIVET - RIVETS SHALL BE DOME HEAD, BREAK MANDREL, BLIND RIVETS CONFORMING TO INDUSTRIAL FASTENERS INSTITUTE STANDARD IFI-114, STYLE 1, GRADES 10 OR 11 EXCEPT THAT THE MINIMUM ULTIMATE TENSILE STRENGTH SHALL BE 360 POUNDS. RIVETS SHALL HAVE A GRIP RANGE ACCOMMODATING THE COMBINED THICKNESS OF THE SIGN PANEL AND ZEE BAR AND SHALL BE INSTALLED IN ACCORDANCE WITH THE MANUFACTURER'S RECOMMENDATIONS.

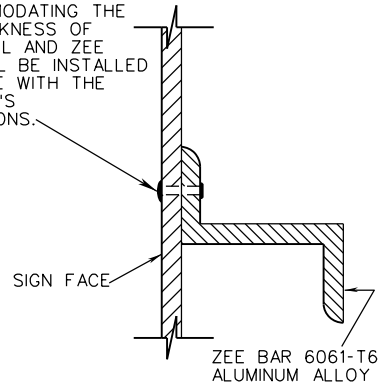

TOP AND BOTTOM ZEE BAR INSTALLATION ON OVERHEAD SIGNS

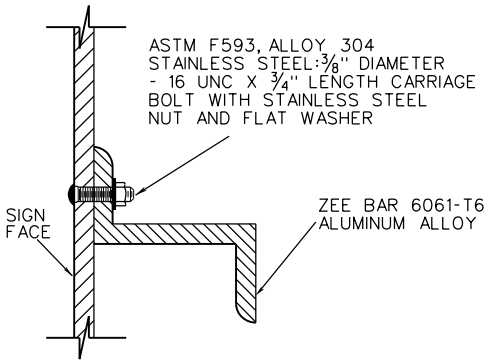

SECTION B-B

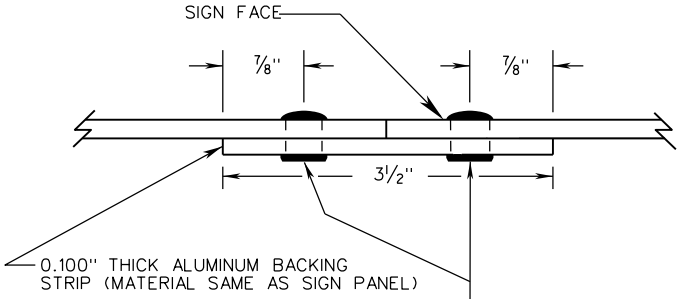

RIVET (SAME AS USED FOR CONNECTING SIGN TO ZEE BAR). IN LIEU OF USING RIVETS, TAPE EQUAL TO 3M'S VHB DOUBLE COATED ACRYLIC FOAM TAPE MAY BE USED EXCEPT ON HORIZONTAL BACKING STRIP. TAPE SHALL BE INSTALLED IN ACCORDANCE WITH THE MANUFACTURER'S RECOMMENDATIONS.

SPECIFICATION REFERENCE	A COPY OF THE ORIGINAL SEALED AND SIGNED DRAWING IS ON FILE IN THE CENTRAL OFFICE.	VDOT ROAD AND BRIDGE STANDARDS	
701	SIGN PANEL DESIGN VIRGINIA DEPARTMENT OF TRANSPORTATION	REVISION DATE 09/18	SHEET 1 OF 2 1325.10

SPD-1

SIGN PANEL DIMENSIONS				ZEE BAR
W	H	c ✳	d ✳	NO.
12′	4′	14″	20″	2
11′	5′	16″	28″	2
10′	6′	12″	4′-0″	2
12′	6′	12″	4′-0″	2
14′	6′	12″	4′-0″	2
16′	6′	12″	4′-0″	2
18′	6′	12″	4′-0″	2
20′	6′	12″	4′-0″	2
22′	6′	12″	4′-0″	2
24′	6′	12″	4′-0″	2
26′	6′	12″	4′-0″	2
28′	6′	12″	4′-0″	2
30′	6′	12″	4′-0″	2
10′	8′	12″	3′-0″	3
12′	8′	12″	3′-0″	3
14′	8′	12″	3′-0″	3
16′	8′	12″	3′-0″	3
18′	8′	12″	3′-0″	3
20′	8′	12″	3′-0″	3
22′	8′	12″	3′-0″	3
24′	8′	12″	3′-0″	3
26′	8′	12″	3′-0″	3
28′	8′	12″	3′-0″	3
30′	8′	12″	3′-0″	3
10′	10′	18″	3′-6″	3
12′	10′	18″	3′-6″	3
14′	10′	18″	3′-6″	3
16′	10′	18″	3′-6″	3
18′	10′	18″	3′-6″	3
20′	10′	18″	3′-6″	3
22′	10′	18″	3′-6″	3
24′	10′	18″	3′-6″	3

SIGN PANEL DIMENSIONS				ZEE BAR
W	H	c ✳	d ✳	NO.
26′	10′	18″	3′-6″	3
28′	10′	18″	3′-6″	3
30′	10′	18″	3′-6″	3
10′	9′	18″	3′-0″	3
12′	9′	18″	3′-0″	3
14′	9′	18″	3′-0″	3
16′	9′	18″	3′-0″	3
18′	9′	18″	3′-0″	3
20′	9′	18″	3′-0″	3
22′	9′	18″	3′-0″	3
24′	9′	18″	3′-0″	3
26′	9′	18″	3′-0″	3
28′	9′	18″	3′-0″	3
30′	9′	18″	3′-0″	3
12′	12′	18″	3′-0″	4
14′	12′	18″	3′-0″	4
16′	12′	18″	3′-0″	4
18′	12′	18″	3′-0″	4
20′	12′	21″	4′-3″	3
22′	12′	21″	4′-3″	3
24′	12′	21″	4′-3″	3
26′	12′	21″	4′-3″	3
28′	12′	21″	4′-3″	3
30′	12′	21″	4′-3″	3
14′	14′	18″	3′-8″	4
16′	14′	18″	3′-8″	4
18′	14′	18″	3′-8″	4
20′	14′	18″	3′-8″	4
22′	14′	18″	3′-8″	4
24′	14′	18″	3′-8″	4
26′	14′	18″	3′-8″	4
28′	14′	18″	3′-8″	4

SIGN PANEL DIMENSIONS				ZEE BAR
W	H	c ✳	d ✳	NO.
30′	14′	18″	3′-8″	4
16′	16′	18″	3′-3″	5
18′	16′	18″	3′-3″	5
20′	16′	18″	3′-3″	5
22′	16′	18″	3′-3″	5
24′	16′	18″	3′-3″	5
26′	16′	18″	3′-3″	5
28′	16′	18″	3′-3″	5
30′	16′	18″	3′-3″	5
VARIES	2′-6′	9″	12″	2

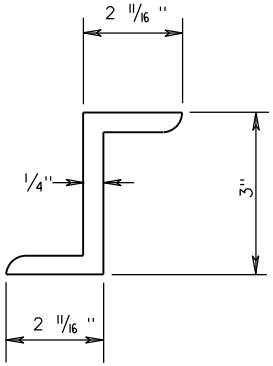

ZEE BAR

✳ DIMENSIONS "c" AND "d" ARE MEASURED TO CENTER OF RIVET OR CARRIAGE BOLT

VDOT
ROAD AND BRIDGE STANDARDS

SHEET 2 OF 2
1325.11

REVISION DATE
09/18

A COPY OF THE ORIGINAL SEALED AND SIGNED DRAWING IS ON FILE IN THE CENTRAL OFFICE.

SIGN PANEL DESIGN

VIRGINIA DEPARTMENT OF TRANSPORTATION

SPECIFICATION REFERENCE
701

SPD-2

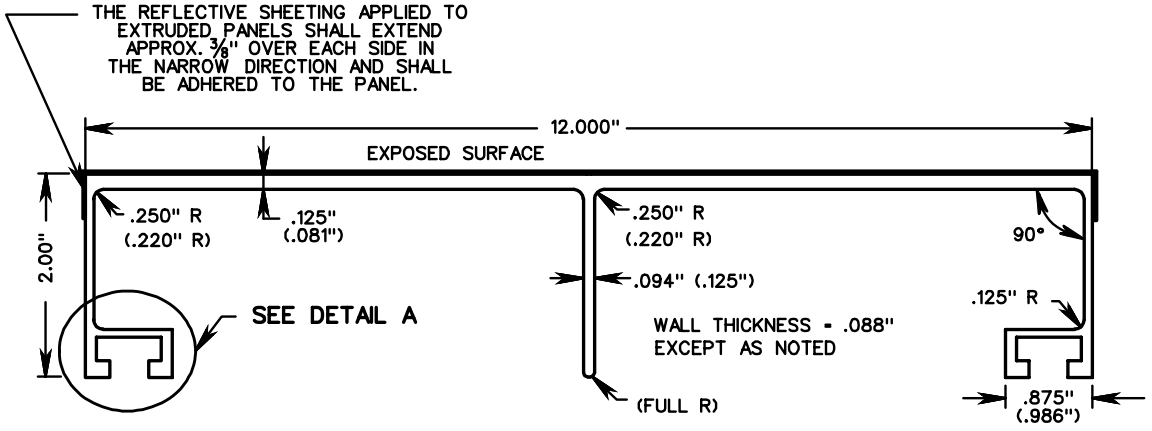

FULL PANEL

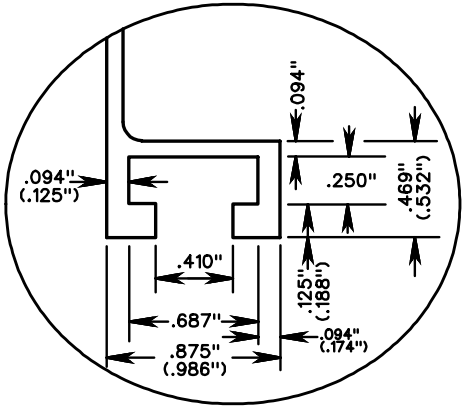

DETAIL A

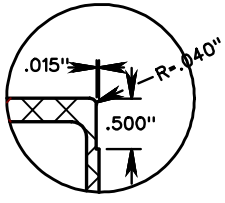

DETAIL B

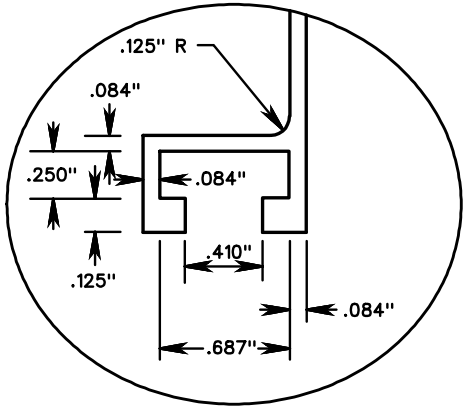

DETAIL C

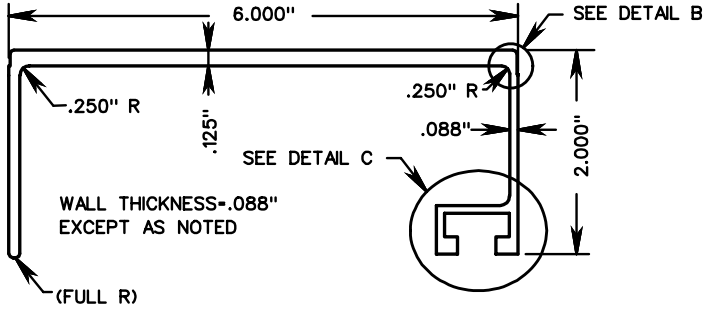

HALF PANEL

NOTES:

1. ALUMINUM PANELS MAY HAVE SQUARE CORNERS OR NOTCHED CORNERS AS SHOWN. NO OTHER TYPE CORNERS ARE ACCEPTABLE.
2. ALTERNATE DIMENSIONS INDICATED IN PARENTHESES ARE ACCEPTABLE.

SPECIFICATION REFERENCE	EXTRUDED SIGN PANEL DESIGN	VDOT ROAD AND BRIDGE STANDARDS
701	VIRGINIA DEPARTMENT OF TRANSPORTATION	REVISION DATE / SHEET 1 OF 2 / 1325.20

SPD-2

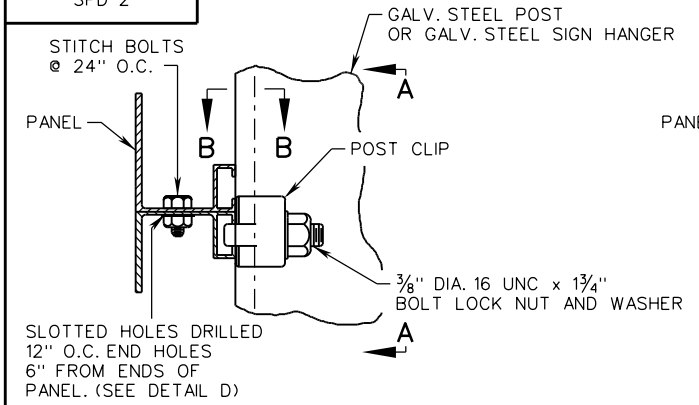

SIGN PANEL ASSEMBLY

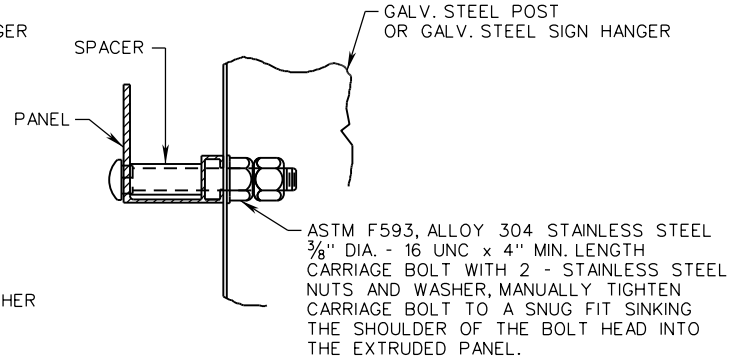

DETAIL E

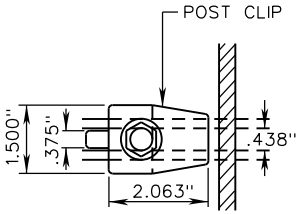

SECTION A-A

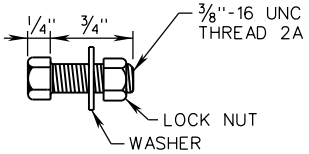

STITCH BOLT (TYP.)

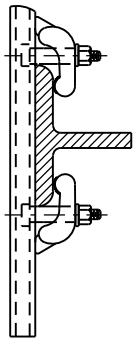

SECTION B-B

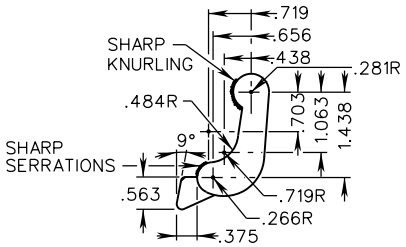

POST CLIP (TYP.)

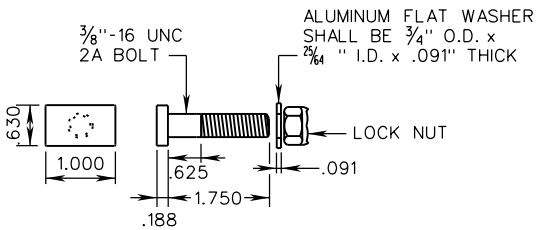

POST CLIP BOLT (TYP.)

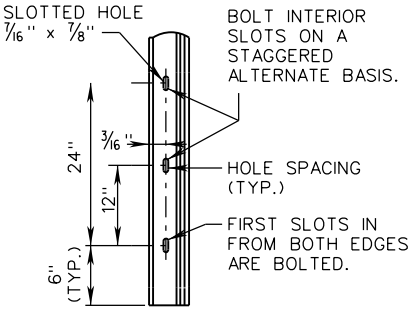

DETAIL D

NOTES:

1. DOUBLE POST CLIPS SHALL BE INSTALLED ON ALL SIGN HANGERS, EXCEPT ON OVERHEAD SIGN STRUCTURES WHERE CARRIAGE BOLTS ARE REQUIRED.

2. ALL SIGN PANELS INSTALLED ON OVERHEAD SIGN STRUCTURES SHALL BE BOLTED DIRECTLY TO THE SIGN HANGER MEMBERS AT THE BOTTOM AND TOP ROW IN ACCORDANCE WITH DETAIL E. POST CLIPS SHALL BE USED AT ALL OTHER MOUNTING POINTS.

A COPY OF THE ORIGINAL SEALED AND SIGNED DRAWING IS ON FILE IN THE CENTRAL OFFICE.

VDOT ROAD AND BRIDGE STANDARDS	EXTRUDED SIGN PANEL DESIGN	SPECIFICATION REFERENCE
SHEET 2 OF 2 / 1325.21 — REVISION DATE 07/16	VIRGINIA DEPARTMENT OF TRANSPORTATION	701

SPD-3

SIGN PANEL DIMENSIONS		SIGN PANEL ATTACHMENT DETAILS							
						ZEE BAR		TEE	CLAMPS
W	H	a	b	c	d	NO.	SIZE	NO.	NO.
12′	4′	2′-0″	8′-0″	14″	20″	2	B	0	0
11′	5′	1′-6″	8′-0″	16″	28″	2	B	0	0
10′	6′	1′-0″	8′-0″	12″	4′-0″	1	B	1	4
12′	6′	2′-0″	8′-0″	12″	4′-0″	1	B	1	4
14′	6′	3′-0″	8′-0″	12″	4′-0″	2	B	0	0
16′	6′	3′-6″	9′-0″	12″	4′-0″	2	C	0	0
18′	6′	4′-0″	10′-0″	12″	4′-0″	2	C	0	0
20′	6′	4′-6″	11′-0″	12″	4′-0″	2	D	0	0
22′	6′	4′-10″	12′-4″	12″	4′-0″	2	E	0	0
24′	6′	5′-4″	13′-4″	12″	4′-0″	2	E	0	0
26′	6′	5′-10″	14′-4″	12″	4′-0″	2	E	0	0
28′	6′	6′-3″	15′-6″	12″	4′-0″	2	E	0	0
30′	6′	6′-8″	16′-8″	12″	4′-0″	2	E	0	0
10′	8′	1′-0″	8′-0″	12″	3′-0″	1	B	2	8
12′	8′	2′-0″	8′-0″	12″	3′-0″	1	B	2	8
14′	8′	3′-0″	8′-0″	12″	3′-0″	1	B	2	8
16′	8′	3′-6	9′-0″	12″	3′-0″	3	B	0	0
18′	8′	4′-0″	10′-0″	12″	3′-0″	3	C	0	0
20′	8′	4′-6″	11′-0″	12″	3′-0″	3	C	0	0
22′	8′	4′-10″	12′-4″	12″	3′-0″	3	D	0	0
24′	8′	5′-4″	13′-4″	12″	3′-0″	3	D	0	0
26′	8′	5′-10″	14′-4″	12″	3′-0″	3	D	0	0
28′	8′	6′-3″	15′-6″	12″	3′-0″	3	E	0	0
30′	8′	6′-8″	16′-8″	12″	3′-0″	3	E	0	0
10′	10′	1′-0″	8′-0″	18″	3′-6″	1	B	2	8
12′	10′	2′-0″	8′-0″	18″	3′-6″	1	B	2	8
14′	10′	3′-0″	8′-0″	18″	3′-6″	1	B	2	8
16′	10′	3′-6″	9′-0″	18″	3′-6″	1	B	2	8
18′	10′	4′-0″	10′-0″	18″	3′-6″	3	C	0	0
20′	10′	4′-6″	11′-0″	18″	3′-6″	3	C	0	0
22′	10′	4′-10″	12′-4″	18″	3′-6″	3	C	0	0

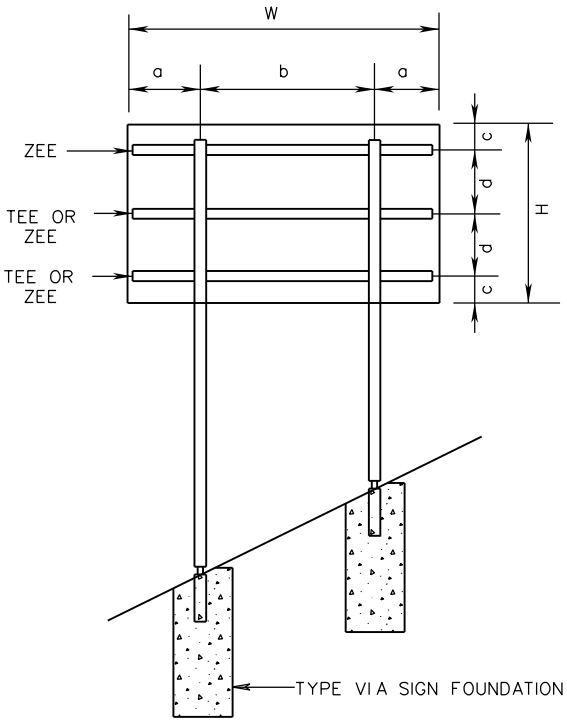

SPECIFICATION REFERENCE

701

SIGN PANEL DESIGN

VIRGINIA DEPARTMENT OF TRANSPORTATION

VDOT

ROAD AND BRIDGE STANDARDS

REVISION DATE

SHEET 1 OF 3

1325.30

SPD-3

SIGN PANEL DIMENSIONS		SIGN PANEL ATTACHMENT DETAILS							
						ZEE BAR		TEE	CLAMPS
W	H	a	b	c	d	NO.	SIZE	NO.	NO.
24′	10′	5′-4″	13′-4″	18″	3′-6″	3	D	0	0
26′	10′	5′-10″	14′-4″	18″	3′-6″	3	D	0	0
28′	10′	6′-3″	15′-6″	18″	3′-6″	3	D	0	0
30′	10′	7′-3″	15′-6″	18″	3′-6″	3	D	0	0
10′	9′	1′-0″	8′-0″	18″	3′-0″	1	B	2	8
12′	9′	2′-0″	8′-0″	18″	3′-0″	1	B	2	8
14′	9′	3′-0″	8′-0″	18″	3′-0″	1	B	2	8
16′	9′	3′-6″	9′-0″	18″	3′-0″	3	C	0	0
18′	9′	4′-0″	10′-0″	18″	3′-0″	3	C	0	0
20′	9′	4′-6″	11′-0″	18″	3′-0″	3	C	0	0
22′	9′	4′-10″	12′-4″	18″	3′-0″	3	D	0	0
24′	9′	5′-4″	13′-4″	18″	3′-0″	3	D	0	0
26′	9′	5′-10″	14′-4″	18″	3′-0″	3	D	0	0
28′	9′	6′-10″	14′-4″	18″	3′-0″	3	D	0	0
30′	9′	7′-10″	14′-4″	18″	3′-0″	3	D	0	0
12′	12′	2′-0″	8′-0″	18″	3′-0″	1	B	3	12
14′	12′	3′-0″	8′-0″	18″	3′-0″	1	B	3	12
16′	12′	3′-6″	9′-0″	18″	3′-0″	1	B	3	12
18′	12′	4′-0″	10′-0″	18″	3′-0″	1	B	3	12
20′	12′	4′-6″	11′-0″	21″	4′-3″	3	B	0	0
22′	12′	4′10″	12′-4″	21″	4′-3″	3	C	0	0
24′	12′	5′-4″	13′-4″	21″	4′-3″	3	C	0	0
26′	12′	3′-10″	9′-2″	21″	4′-3″	1	B	2	12
28′	12′	4′-2″	9′-10″	21″	4′-3″	1	B	2	12
30′	12′	4′-6″	10′-6″	21″	4′-3″	1	B	2	12
14′	14′	3′-0″	8′-0″	18″	3′-8″	1	B	3	12
16′	14′	3′-6″	9′-0″	18″	3′-8″	1	B	3	12
18′	14′	4′-0″	10′-0″	18″	3′-8″	1	B	3	12
20′	14′	4′-6″	11′-0″	18″	3′-8″	1	B	3	12
22′	14′	3′-0″	8′-0″	18″	3′-8″	1	B	3	18
24′	14′	3′-7″	8′-5″	18″	3′-8″	1	B	3	18
26′	14′	3′-10″	9′-2″	18″	3′-8″	1	B	3	18

SIGN PANEL DIMENSIONS		SIGN PANEL ATTACHMENT DETAILS							
						ZEE BAR		TEE	CLAMPS
W	H	a	b	c	d	NO.	SIZE	NO.	NO.
28′	14′	4′-2″	9′-10″	18″	3′-8″	1	B	3	18
30′	14′	4′-6″	10′-6″	18″	3′-8″	1	B	3	18
16′	16′	3′-6″	9′-0″	18″	3′-3″	1	B	4	16
18′	16′	4′-0″	10′-0″	18″	3′-3″	1	B	4	16
20′	16′	2′-0″	8′-0″	18″	3′-3″	1	B	4	24
22′	16′	3′-0″	8′-0″	18″	3′-3″	1	B	4	24
24′	16′	3′-7″	8′-5″	18″	3′-3″	1	B	4	24
26′	16′	3′-10″	9′-2″	18″	3′-3″	1	B	4	24
28′	16′	4′-2″	9′-10″	18″	3′-3″	1	B	4	24
30′	16′	4′-6″	10′-6″	18″	3′-3″	1	B	4	24
VARIES	2′-6″	-	-	9″	12″	2	B	-	-

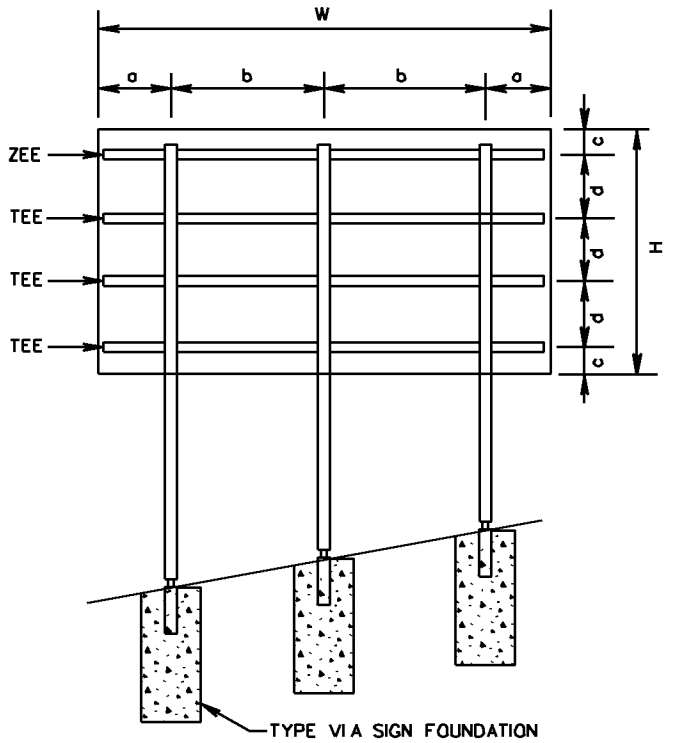

VDOT
ROAD AND BRIDGE STANDARDS

SHEET 2 OF 3

1325.31

REVISION DATE 4/09

SIGN PANEL DESIGN

VIRGINIA DEPARTMENT OF TRANSPORTATION

SPECIFICATION REFERENCE

701

SPD-3

ISOMETRIC VIEW

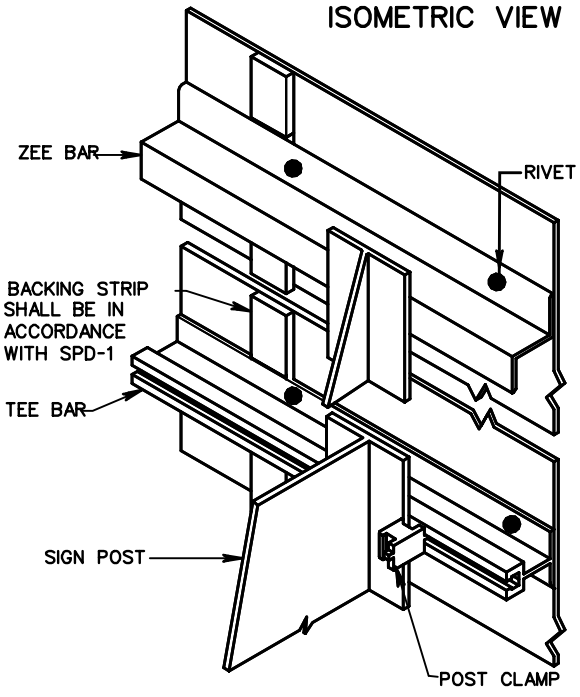

UNLESS OTHERWISE NOTED THE TOP OF THE SIGN PANEL SHALL NOT EXTEND ABOVE THE SIGN POST NO GREATER THAN THE DISTANCE OF 1/2 C.

POST CLAMP DETAIL

GALVANIZED GRAY - IRON OR ALUMINUM CASTING

CENTERLINE HOLE FOR 3/8" DIAMETER SQUARE HEAD STAINLESS STEEL BOLT X 2 1/4" LONG WITH SELF-LOCKING NUT AND ONE FLAT WASHER.

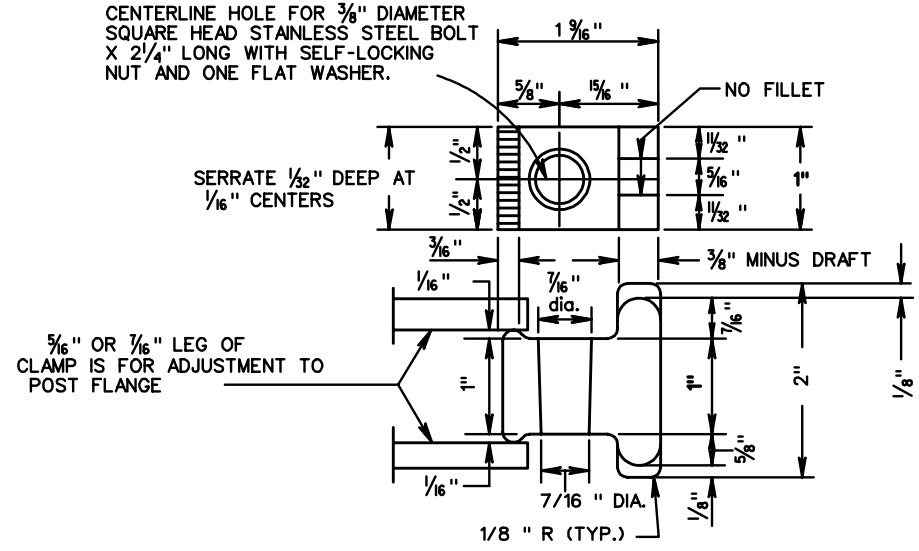

FASTENING

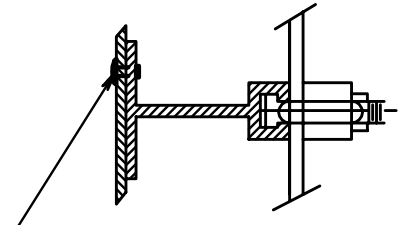

3/16" DIAMETER RIVET. -RIVETS SHALL BE DOME HEAD,BREAK MANDREL, BLIND RIVETS CONFORMING TO INDUSTRIAL FASTENERS INSTITUTE STANDARD IFI-114, STYLE 1, GRADES 10 OR 11 EXCEPT THAT THE MINIMUM ULTIMATE TENSILE STRENGTH SHALL BE 360 POUNDS. RIVETS SHALL HAVE A GRIP RANGE ACCOMMODATING THE COMBINED THICKNESS OF THE SIGN PANEL AND ZEE BAR AND SHALL BE INSTALLED IN ACCORDANCE WITH THE MANUFACTURER'S RECOMMENDATIONS.

TEE BAR

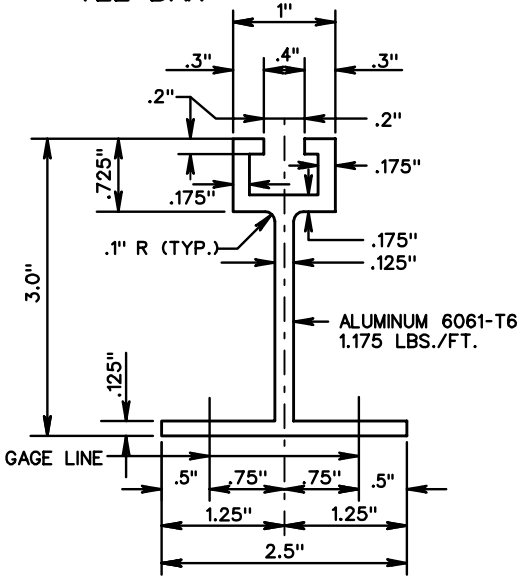

ZEE BARS		
TYPE	SIZE	WEIGHT
A	2 3/8" x 1 1/4" x 3/16"	1.00LBS./FT.
B	3" x 2 11/16" x 1/4"	2.40LBS./FT.
C	4" x 3 1/16" x 1/4"	2.93LBS./FT.
D	5" x 3 1/4" x 5/16"	4.13LBS./FT.
E	6" x 3 1/2" x 3/8"	5.58LBS./FT.

SPECIFICATION REFERENCE	SIGN PANEL DESIGN	VDOT ROAD AND BRIDGE STANDARDS
700 701	VIRGINIA DEPARTMENT OF TRANSPORTATION	REVISION DATE / SHEET 3 OF 3 / 1325.32

SPD-4

TYPE VA-A

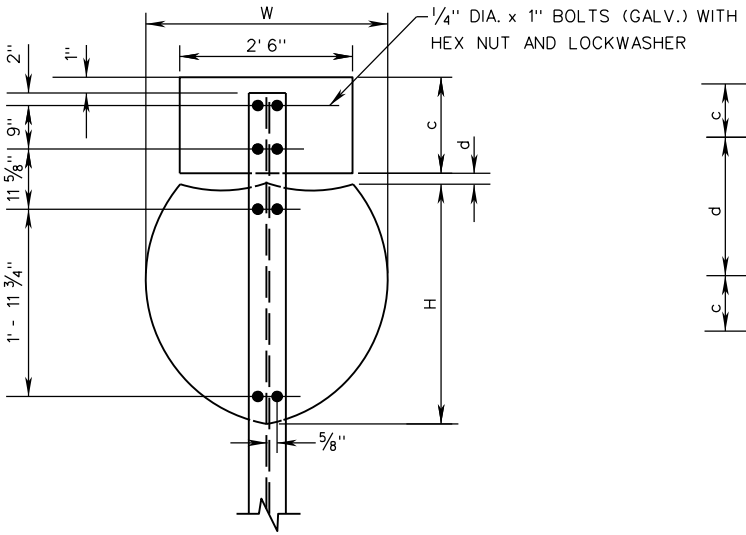

TYPES VA-B, VA-C, VA-D, VA-E, VA-L, VA-M, VA-N AND VA-O

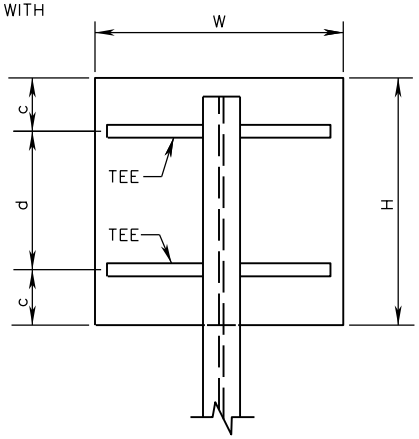

TYPE VA-F

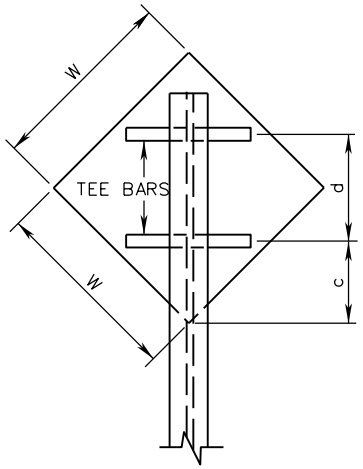

UNLESS OTHERWISE NOTED THE TOP OF THE SIGN PANEL SHALL NOT EXTEND ABOVE THE SIGN POST NO GREATER THAN THE DISTANCE OF 1/2 c.

TYPE VA-G

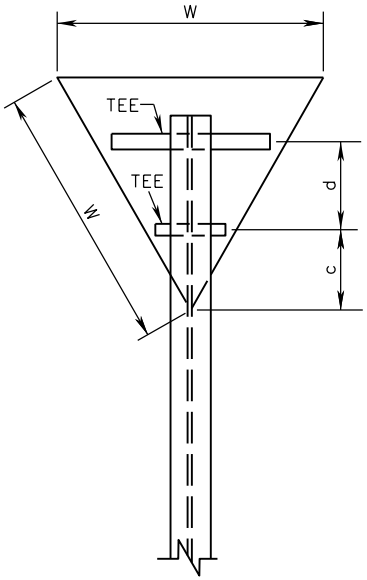

TYPE VA-K

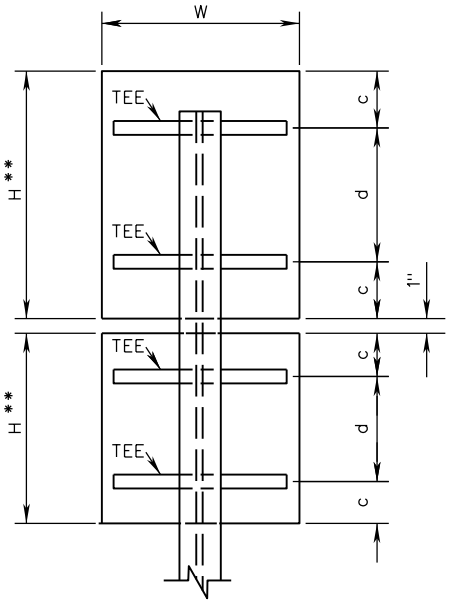

TYPE VA-A2

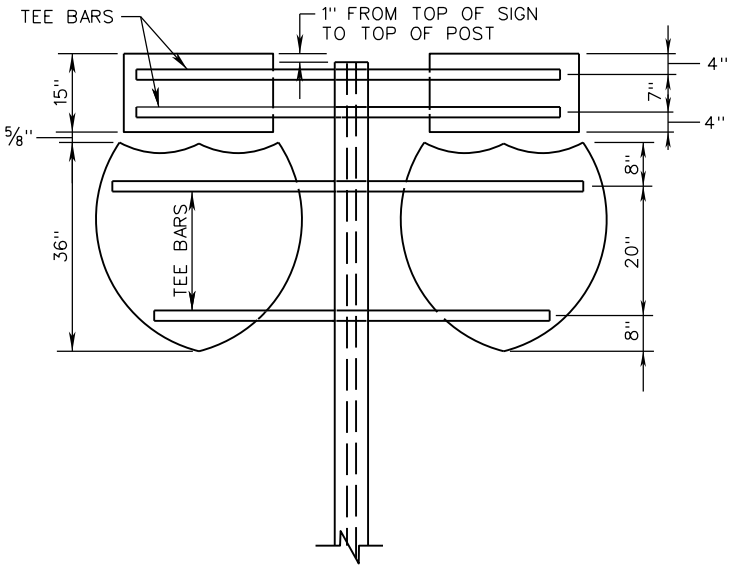

VDOT ROAD AND BRIDGE STANDARDS	A COPY OF THE ORIGINAL SEALED AND SIGNED DRAWING IS ON FILE IN THE CENTRAL OFFICE.		SPECIFICATION REFERENCE
SHEET 1 OF 2	SIGN PANEL DESIGN		701
1325.40	REVISION DATE 01/15	VIRGINIA DEPARTMENT OF TRANSPORTATION	

SPD-4

FASTENING

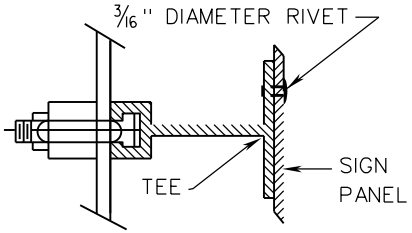

RIVETS SHALL BE DOME HEAD, BREAK MANDREL, BLIND RIVETS CONFORMING TO INDUSTRIAL FASTENERS INSTITUTE STANDARD IFI-114, STYLE 1, GRADES 10 OR 11 EXCEPT THAT THE MINIMUM ULTIMATE TENSILE STRENGTH SHALL BE 360 POUNDS. RIVETS SHALL HAVE A GRIP RANGE ACCOMMODATING THE COMBINED THICKNESS OF THE SIGN PANEL AND ZEE BAR AND SHALL BE INSTALLED IN ACCORDANCE WITH THE MANUFACTURER'S RECOMMENDATIONS.

POST CLAMP DETAIL

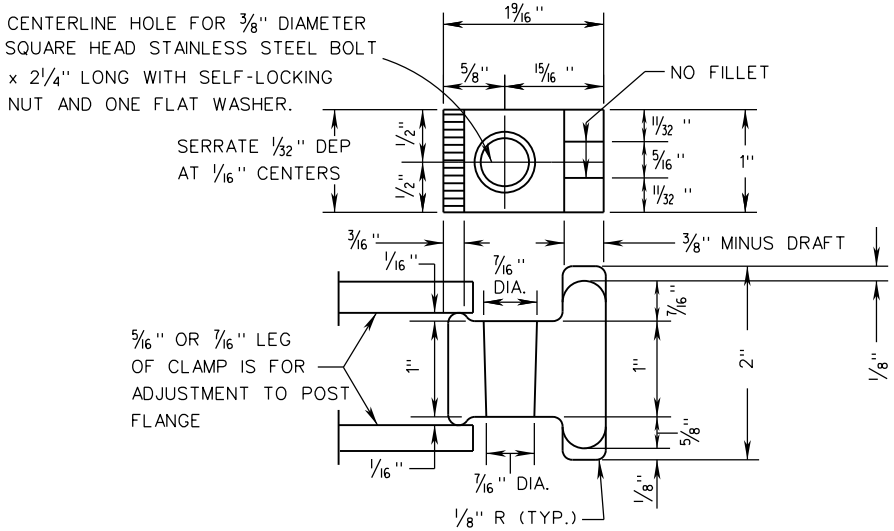

TEE CROSS SECTION

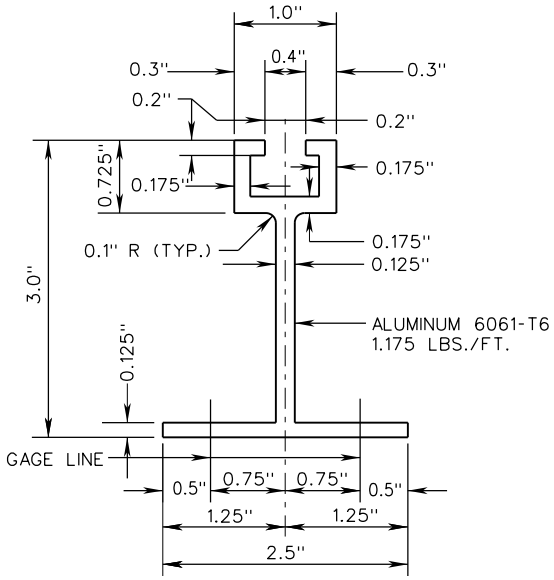

TEE BAR SPACING CHART

STRUCTURE TYPE	SIGN PANEL DIMENSIONS				TEE 6061-T6 2.5 x 3.0 @ 1.175 LB/FT.		
	W	H	c	d	NUMBER	LENGTH	CLAMP
VA-A	3'	3'	1'-3"	5/8"	-	-	-
VA-B	4'	4'	1'-2"	1'-8"	2	3'-0"	4
VA-C	4'	5'	1'-3"	2'-6"	2	3'-0"	4
VA-D	5'	3'	0'-8"	1'-8"	2	4'-0"	4
VA-E	6'	5'	1'-3"	2'-6"	2	5'-0"	4
VA-F	4'	-	1'-8"	2'-4"	2	2'-10"	4
VA-G	5'	-	1'-8"	-	1 EACH	2'-10" & 1'-4"	4
VA-K	4'	5'	1'-3"	2'-6"	2	3'-0"	4
VA-K	4'	4'	1'-2"	1'-8"	2	3'-0"	4
VA-L	6'	6'	1'-6"	3'-0"	2	5'-0"	4
VA-M	5'	5'	1'-3"	2'-6"	2	4'-0"	4
VA-A2	6'	3'	-	-	4	5'-0"	-
VA-N	7'	7'	1'-0"	2'-6"	3	6'-0"	6
VA-O	13'	5'	1'-3"	2'-6"	2	4'-0"	4

SPECIFICATION REFERENCE

701

A COPY OF THE ORIGINAL SEALED AND SIGNED DRAWING IS ON FILE IN THE CENTRAL OFFICE.

SIGN PANEL DESIGN

VIRGINIA DEPARTMENT OF TRANSPORTATION

VDOT

ROAD AND BRIDGE STANDARDS

REVISION DATE 01/15

SHEET 2 OF 2

1325.41

SPD-5

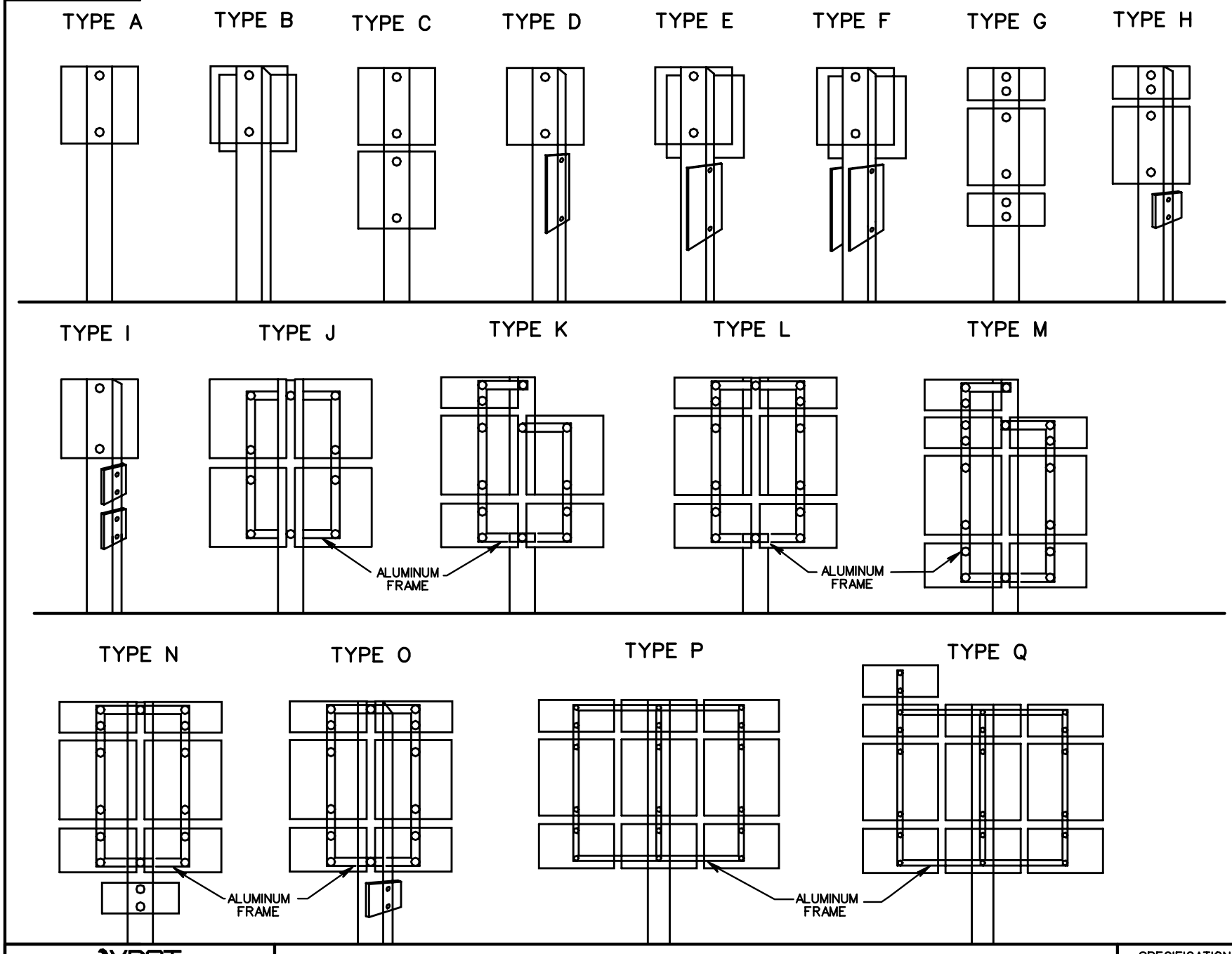

VDOT
ROAD AND BRIDGE STANDARDS

SHEET 1 OF 2

REVISION DATE

1325.50

SIGN PANEL DESIGN

VIRGINIA DEPARTMENT OF TRANSPORTATION

SPECIFICATION REFERENCE

701

SPD-5

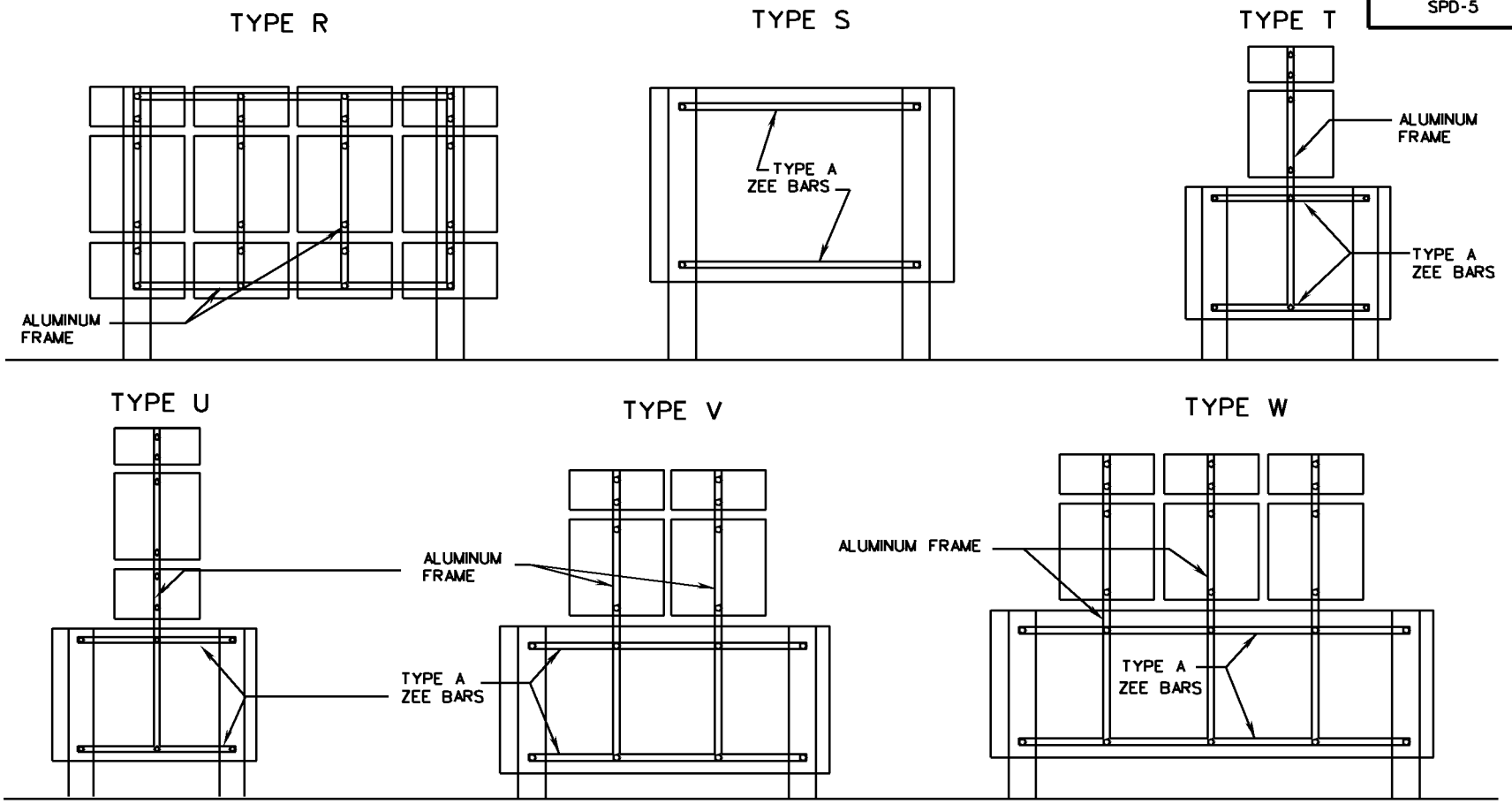

ALUMINUM FRAMING

SIGN PANEL ATTACHMENT DETAILS

(FOR SIGN PANEL ATTACHMENT TO Z BARS, SEE STANDARD SPD-1)

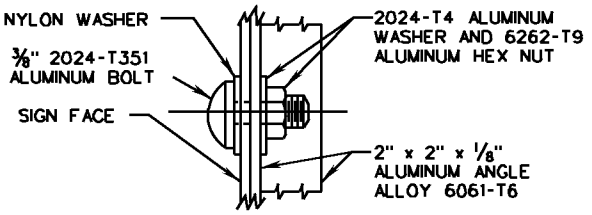

NOTES

NYLON WASHER SHALL BE 1/8" THICK MINIMUM WITH AN OUTSIDE DIAMETER OF 1" AND AN INSIDE DIAMETER OF 7/16".

TO OBTAIN A FLUSH MOUNTING SURFACE FOR SIGNS, ALL WOOD POST SHALL BE MORTISED WHERE NECESSARY TO RECESS THE FLANGE OF ALUMINUM ANGLE.

THE TYPE A ZEE BARS SHALL BE 2 3/8" X 1 1/4" X 3/16".

ALL VERTICAL AND HORIZONTAL SPACING BETWEEN SIGNS IN AN ASSEMBLY SHALL BE ONE INCH UNLESS SPECIFIED.

THESE ARE TYPICAL SIGN PANEL ASSEMBLIES; ALL ASSEMBLIES SHALL BE IN ACCORDANCE WITH PLAN DETAILS.

SPECIFICATION REFERENCE	SIGN PANEL DESIGN	VDOT ROAD AND BRIDGE STANDARDS	
701	VIRGINIA DEPARTMENT OF TRANSPORTATION	REVISION DATE 6-15-09	SHEET 2 OF 2
			1325.51

SPD-6

TYPES VA-B, VA-C, VA-D, VA-L AND VA-M

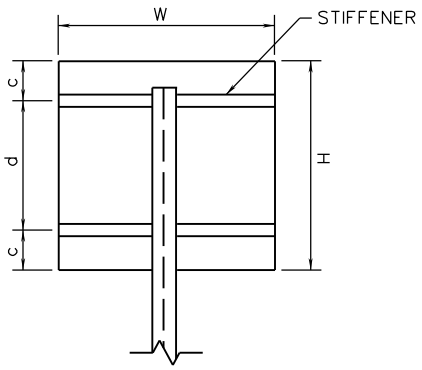

TYPES VA-E, VA-N AND VA-O

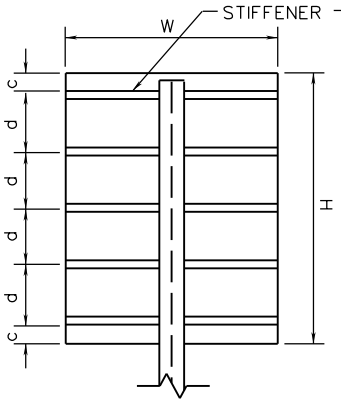

TYPES VA-F

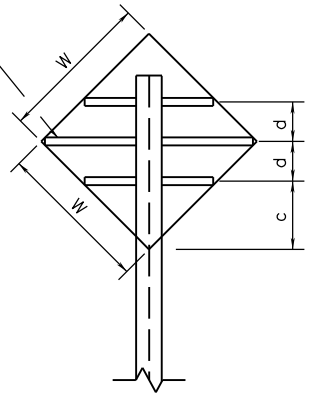

TYPES VA-G

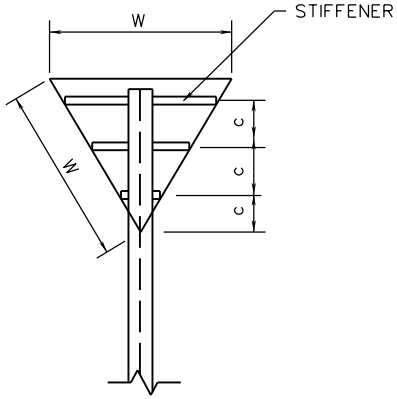

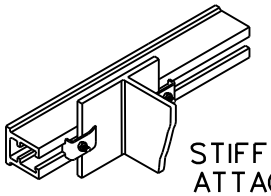

STIFFENER TO POST ATTACHMENT DETAIL

STRUCTURE TYPE	W	H	c	d	STIFFENERS NO.	STIFFENERS SIZE
VA-B	4'	4'	6½"	2'-11"	2	MEDIUM
VA-C	4'	5'	12½"	2'-11"	2	MEDIUM
VA-D	5'	3'	7"	1'-10"	2	MEDIUM
VA-E	6'	5'	0"	1'-3"	5	MEDIUM
VA-F	4'	——	8"	2'-2"	3	MEDIUM
VA-G	5'	——	1'-4"	——	3	MEDIUM
VA-K	4'	5'	12½"	2'-11"	2	MEDIUM
	4'	4'	6½"	2'-11"	2	MEDIUM
VA-L	6'	6'	6"	1'-3"	5	MEDIUM
VA-M	5'	5'	8"	1'-10"	3	MEDIUM
VA-N	7'	7'	5¼"	10½"	8	MEDIUM
VA-O	13'	5'	1½"	3"	20	MEDIUM

SEE STANDARD SPD-4 FOR POST CLAMP AND BOLT DETAILS.

UNLESS OTHERWISE NOTED THE TOP OF THE SIGN PANEL SHALL NOT EXTEND ABOVE THE SIGN POST NO GREATER THAN THE DISTANCE OF ½ c.

MEDIUM STIFFENER DETAIL

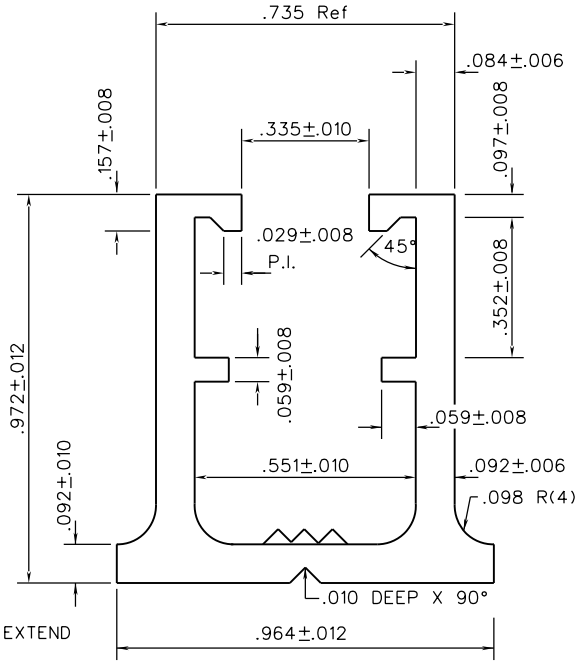

TYPES VA-K

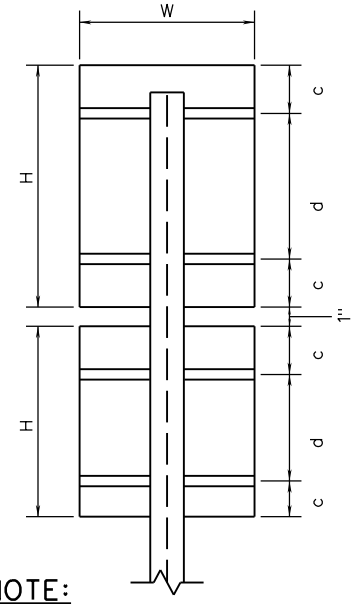

NOTE:

RIVETS SHALL BE USED FOR SECURING THE STIFFENERS TO THE SIGN UNLESS OTHERWISE SPECIFIED OR APPROVED, AND SHALL BE 3/16" MINIMUM DIAMETER BY ½" LONG ALUMINUM AND CAPABLE OF WITHSTANDING A MINIMUM SHEAR FORCE OF 460LBS. RIVET SPACING FOR ATTACHING THE STIFFENERS TO THE SIGN PANEL SHALL BE 6" MAXIMUM BEGINNING 1½" FROM THE ENDS OF THE SIGN PANEL.

VDOT
ROAD AND BRIDGE STANDARDS

SHEET 1 OF 1

1325.60

REVISION DATE 01/15

A COPY OF THE ORIGINAL SEALED AND SIGNED DRAWING IS ON FILE IN THE CENTRAL OFFICE.

SIGN PANEL DESIGN

VIRGINIA DEPARTMENT OF TRANSPORTATION

SPECIFICATION REFERENCE

701

SPD-7

SIGN PANEL DETAIL

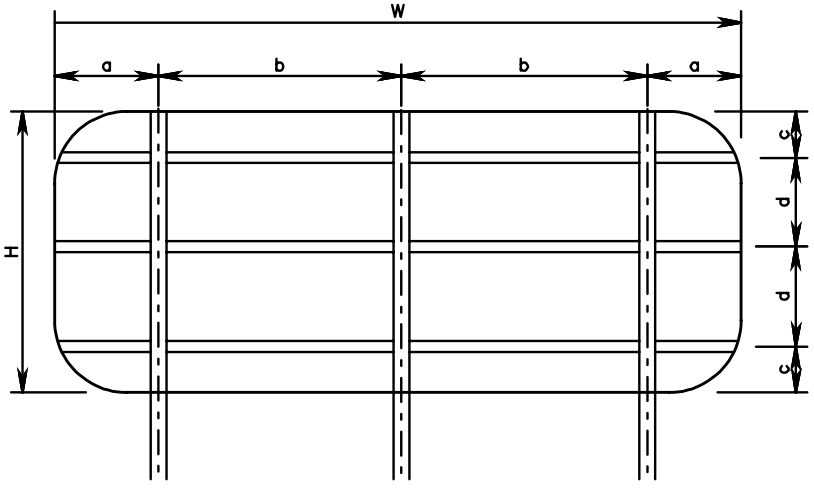

SIGN PANEL DETAIL

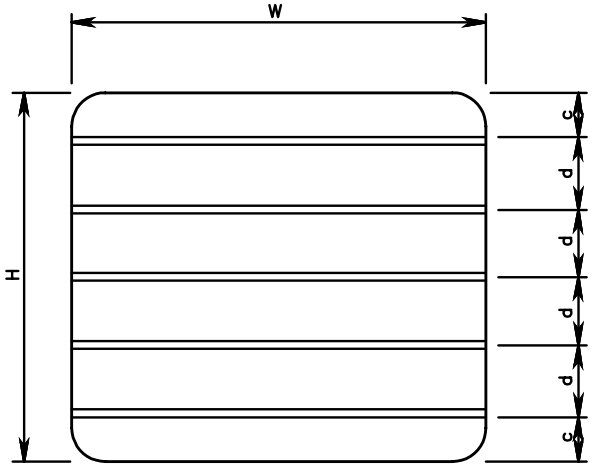

SIGN PANEL DETAIL

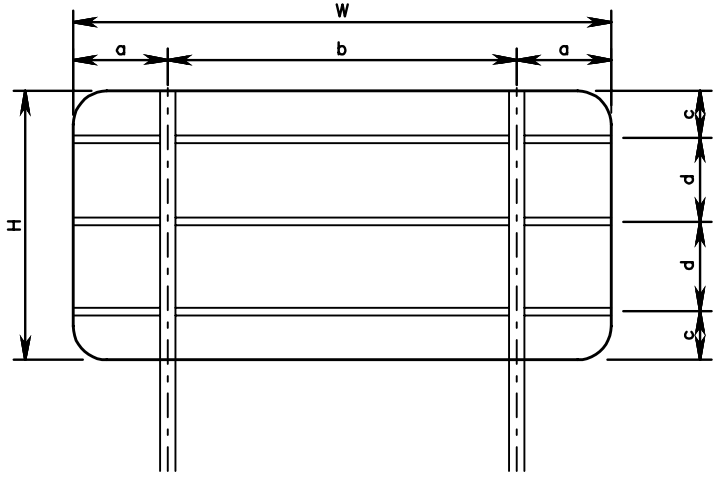

POST CLAMP BOLT (STAINLESS STEEL)

STIFFENER TO POST ATTACHMENT DETAIL

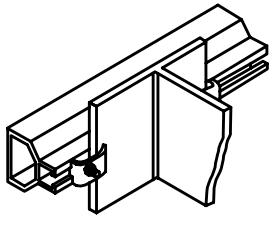

POST CLAMP (STAINLESS STEEL)

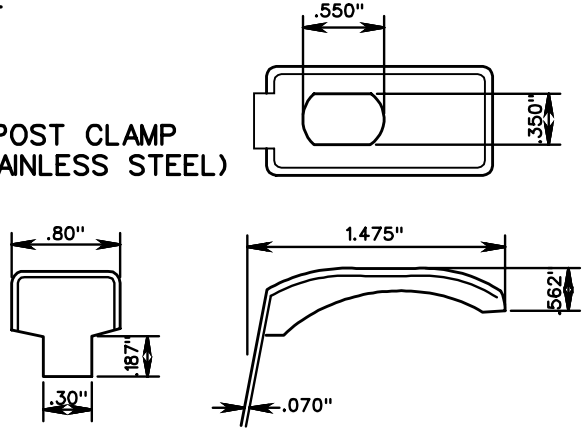

SPECIFICATION REFERENCE	SIGN PANEL DESIGN	VDOT ROAD AND BRIDGE STANDARDS
701	VIRGINIA DEPARTMENT OF TRANSPORTATION	REVISION DATE / SHEET 1 OF 3 / 1325.70

SPD-7

LARGE STIFFENER SPLICE

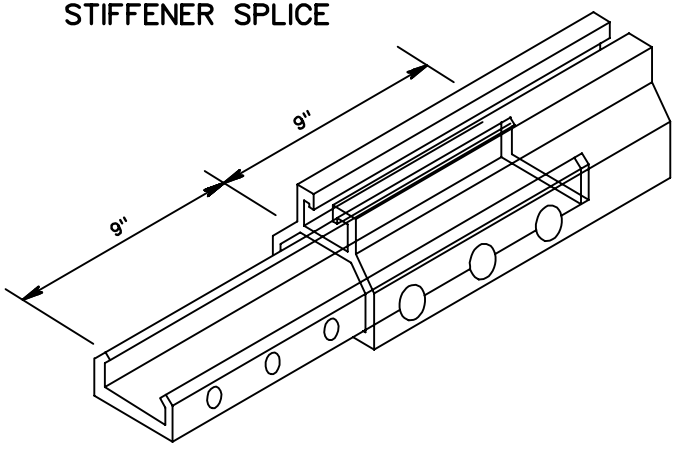

LARGE STIFFENER SPLICE BAR

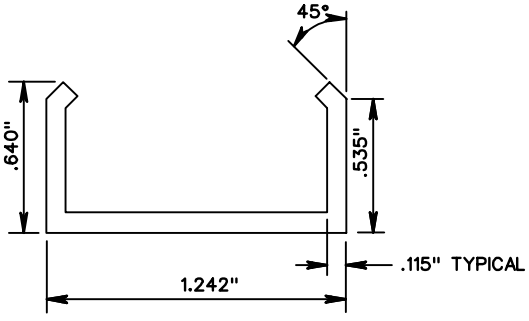

THE MAXIMUM NUMBER OF SPLICES IN A STIFFENER SHALL BE ONE PER STIFFENER LOCATION.

SPLICES SHALL NOT BE IN A VERTICAL ALIGNMENT BUT SHALL BE OFFSET 12" FROM EACH OTHER.

LARGE STIFFENER DETAIL

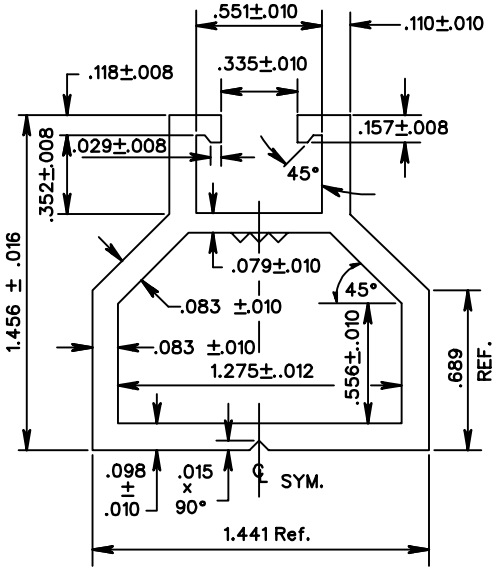

VDOT ROAD AND BRIDGE STANDARDS	SIGN PANEL DESIGN	SPECIFICATION REFERENCE	
SHEET 2 OF 3	REVISION DATE	VIRGINIA DEPARTMENT OF TRANSPORTATION	701
1325.71			

SPD-7

SIGN PANEL DIMENSIONS		SIGN PANEL ATTACHMENT DETAILS					
						STIFFENER	
W	H	a	b	c	d	NO.	SIZE
12'	4'	2'-0"	8'-0"	11 1/2"	2'-1"	2	LARGE
11'	5'	1'-6"	8'-0"	1 1/2"	2'-0"	3	LARGE
10'	6'	1'-0"	8'-0"	4"	1'-8"	4	LARGE
12'	6'	2'-0"	8'-0"	11"	1'-8"	4	LARGE
14'	6'	2'-10"	8'-5"	0	3'-0"	3	LARGE
16'	6'	3'-2"	9'-7"	0"	3'-0"	3	LARGE
18'	6'	3'-7"	10'-10"	6"	1'-8"	4	LARGE
20'	6'	4'-0"	12'-0"	4"	1'-4"	5	LARGE
22'	6'	4'-5"	13'-2"	1"	1'-2"	6	LARGE
24'	6'	4'-10	14'-5"	3"	11"	7	LARGE
26'	6'	5'-2"	15'-7"	0"	8"	10	LARGE
10'	8'	1'-0"	8'-0"	8"	1'-8"	5	LARGE
12'	8'	2'-0"	8'-0"	6"	2'-4"	4	LARGE
14'	8'	2'-10"	8'-5"	1'-0"	3'-0"	3	LARGE
16'	8'	3'-2"	9'-7"	6"	2'-4"	4	LARGE
18'	8'	3'-7"	10'-10"	3"	1'-6"	6	LARGE
20'	8'	4'-0"	12'-0"	3"	1'-6"	6	LARGE
22'	8'	4'-5"	13'-2"	6"	12"	8	LARGE
24'	8'	4'-10"	14'-5"	3"	9"	11	LARGE
26'	8'	5'-2"	15'-7"	0"	8"	13	LARGE
10'	8'	1'-0"	8'-0"	8"	1'-8"	5	LARGE
12'	8'	2'-0"	8'-0"	6"	2'-4"	4	LARGE
14'	8'	2'-10"	8'-5"	1'-0"	3'-0"	3	LARGE
16'	8'	3'-2"	9'-7"	6"	2'-4"	4	LARGE
18'	8'	3'-7"	10'-10"	3"	1'-6"	6	LARGE
18'	8'	3'-7"	10'-10"	3"	1'-6"	6	LARGE
20'	8'	4'-0"	12'-0"	3"	1'-6"	6	LARGE
22'	8'	4'-5"	13'-2"	6"	12"	8	LARGE
24'	8'	4'-10"	14'-5"	3"	9"	11	LARGE
26'	8'	5'-2"	15'-7"	0	8"	13	LARGE
10'	10'	1'-0"	8'-0"	0	2'-0"	6	LARGE

SIGN PANEL DIMENSIONS		SIGN PANEL ATTACHMENT DETAILS					
						STIFFENER	
W	H	a	b	c	d	NO.	SIZE
12'	10'	2'-0"	8'-0"	4"	2'-4"	5	LARGE
14'	10'	2'-10"	8'-5"	6"	3'-0"	4	LARGE
16'	10'	3'-2"	9'-7"	4"	2'-4"	5	LARGE
18'	10'	3'-7"	10'-10"	0	1'-8"	7	LARGE
20'	10'	4'-0"	12'-0"	4"	1'-4"	8	LARGE
22'	10'	4'-5"	13'-2"	4"	1'-2"	9	LARGE
24'	10'	4'-10"	14'-5"	5"	10"	12	LARGE
26'	10'	5'-2"	15'-7"	0	8"	16	LARGE
10'	9'	1'-0"	8'-0"	4"	1'-8"	6	LARGE
12'	9'	2'-0"	8'-0"	4"	2'-1"	5	LARGE
14'	9'	2'-10"	8'-5"	0	3'-0"	4	LARGE
16'	9'	3'-2"	9'-7"	1'-0"	2'-4"	4	LARGE
18'	9'	3'-7"	10'-10"	4"	1'-8"	6	LARGE
20'	9'	4'-0"	12'-0"	0	1'-6"	7	LARGE
22'	9'	4'-5"	13'-2"	5"	1'-2"	8	LARGE
22'	9'	4'-5"	13'-2"	5"	1'-2"	8	LARGE
24'	9'	4'-10"	14'-5"	4"	10"	11	LARGE
26'	9'	5'-2"	15'-7"	2"	8"	14	LARGE
12'	12'	2'-0"	8'-0"	2"	2'-1"	6	LARGE
14'	12'	2'-10"	8'-5"	0	3'-0"	5	LARGE
16'	12'	3'-2"	9'-7"	2"	2'-4"	6	LARGE
18'	12'	3'-7"	10'-10"	2"	1'-8"	8	LARGE
20'	12'	4'-0"	12'-0"	8"	1'-4"	9	LARGE
22'	12'	4'-5"	13'-2"	2"	1'-2"	11	LARGE
24'	12'	4'-10"	14'-5"	1/2"	11"	14	LARGE
14'	14'	2'-10"	8'-5"	1'-0"	3'-0"	5	LARGE
16'	14'	3'-2"	9'-7"	0	2'-4"	7	LARGE
18'	14'	3'-7"	10'-10"	4"	1'-8"	9	LARGE
20'	14'	4'-0"	12'-0"	4"	1'-4"	11	LARGE
16'	16'	3'-2"	9'-7"	1'-0"	2'-4"	7	LARGE
18'	16'	3'-7"	10'-10"	6"	1'-8"	10	LARGE
VARIES	2'- 6"	-	-	9"	12"	2	LARGE

SPECIFICATION REFERENCE

701

SIGN PANEL DESIGN

VIRGINIA DEPARTMENT OF TRANSPORTATION

VDOT

ROAD AND BRIDGE STANDARDS

REVISION DATE 4/09

SHEET 3 OF 3

1325.72

PRS-1

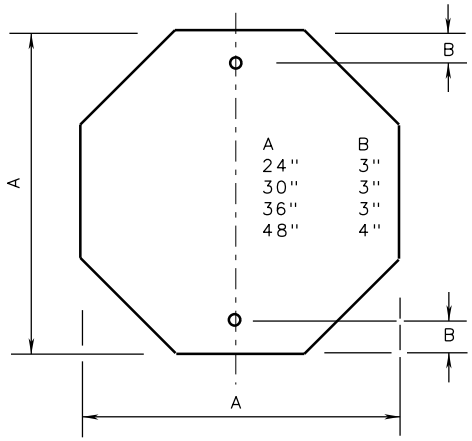

A	B
24"	3"
30"	3"
36"	3"
48"	4"

OCTAGON

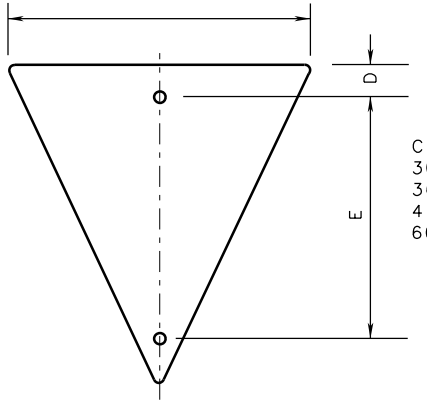

C	D	E
30"	3"	18"
36"	3"	21"
48"	6"	27"
60"	6"	34"

EQUILATERAL TRIANGLE

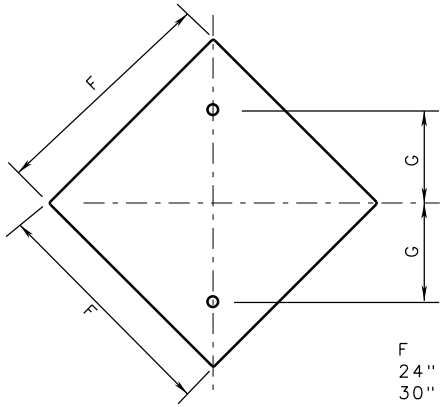

F	G
24"	12"
30"	15"
36"	18"
48"	24"
60"	30"

DIAMOND

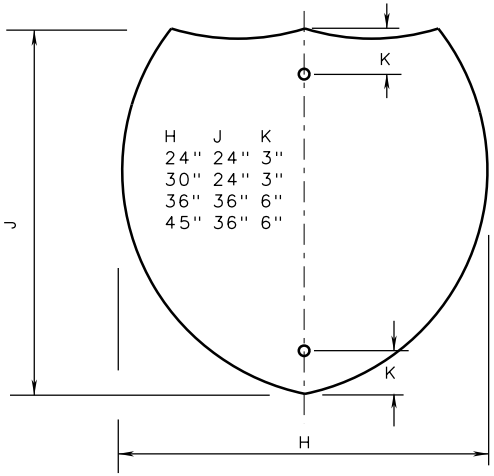

H	J	K
24"	24"	3"
30"	24"	3"
36"	36"	6"
45"	36"	6"

INTERSTATE SHIELD

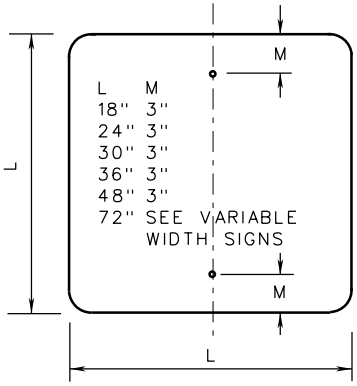

L	M
18"	3"
24"	3"
30"	3"
36"	3"
48"	3"
72"	SEE VARIABLE WIDTH SIGNS

SQUARE

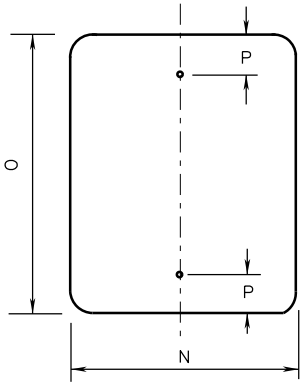

N	O	P
12"	18"	1½"
12"	72"	4"
18"	24"	3"
24"	30"	3"
30"	36"	3"
30"	60"	5"
36"	48"	3"
42"	48"	3"
48"	60"	5"

VERTICAL RECTANGLE

NOTE:

ALL HOLES SHALL BE 7/16" IN DIAMETER.

VDOT
ROAD AND BRIDGE STANDARDS

SHEET 1 OF 2 | REVISION DATE

1326.10

PUNCHING REQUIREMENTS FOR SIGN PANELS

SINGLE POST INSTALLATIONS

VIRGINIA DEPARTMENT OF TRANSPORTATION

SPECIFICATION REFERENCE

701

PRS-1

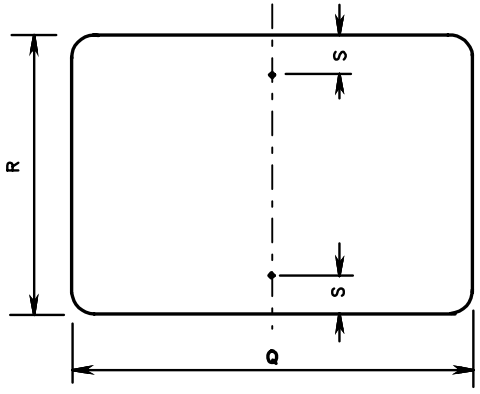

HORIZONTAL RECTANGLE

Q	R	S
18"	6"	1½"
18"	12"	1½"
20"	6"	1½"
21"	15"	1½"
24"	9"	1½"
24"	12"	1½"
24"	18"	3"
30"	15"	1½"
30"	24"	3"
36"	12"	1½"
36"	18"	2"
36"	24"	3"
42"	24"	3"
45"	36"	3"
48"	24"	3"
48"	36"	3"
48"	42"	4"
54"	24"	3"
54"	30"	3"

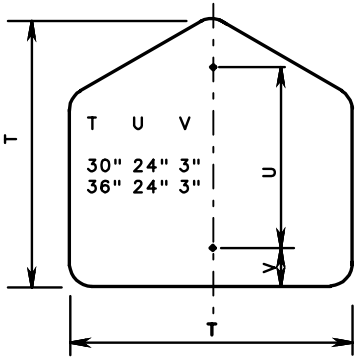

T	U	V
30"	24"	3"
36"	24"	3"

PENTAGON

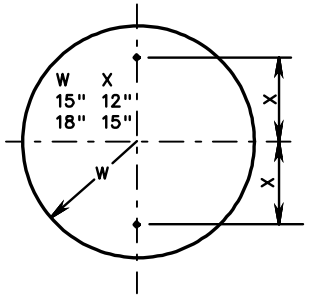

W	X
15"	12"
18"	15"

CIRCLE

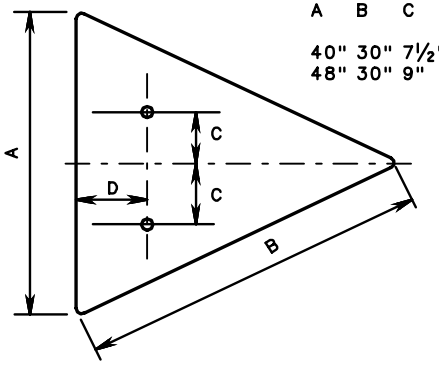

A	B	C	D
40"	30"	7½"	12"
48"	30"	9"	15"

ISOSCELES TRIANGLE

SPECIFICATION REFERENCE
701

PUNCHING REQUIREMENTS FOR SIGN PANELS

SINGLE POST INSTALLATIONS

VIRGINIA DEPARTMENT OF TRANSPORTATION

VDOT

ROAD AND BRIDGE STANDARDS

REVISION DATE

SHEET 2 OF 2

1326.11

ED-2

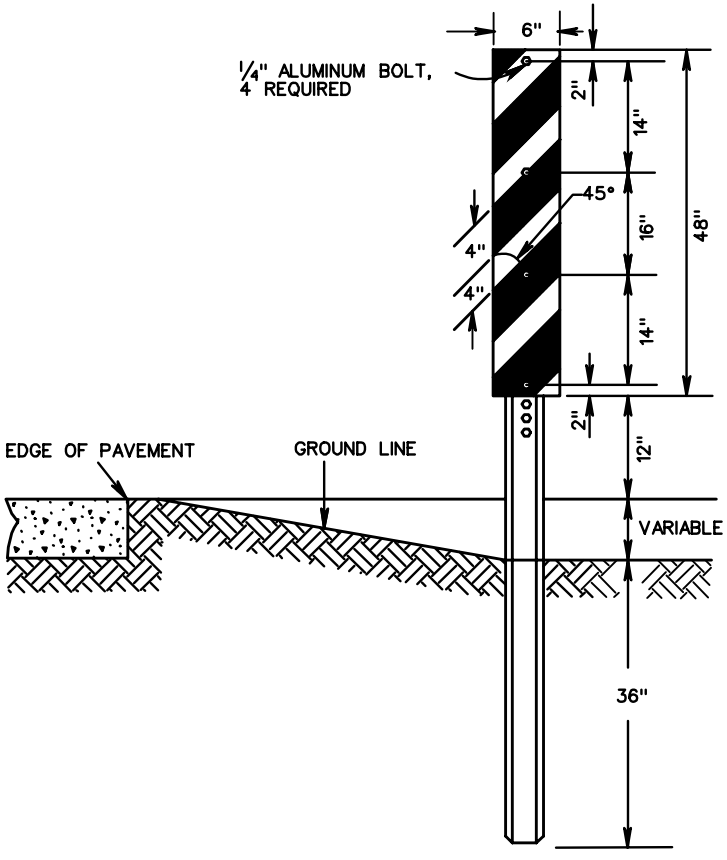

NOTES:

SPECIAL DELINEATORS ARE MADE FROM ALUMINUM ALLOY, NOT LESS THAN 0.080 THICK CONFORMING TO ASTM B209, ALLOY 6061-T6 OR 5052-H38.

DELINEATORS EXTEND 1" ABOVE THE TOP OF THE POST.

DELINEATORS ARE REFLECTORIZED, AND IN ALL CASES, THE COLOR SHALL CONFORM TO THE COLOR OF THE EDGELINES, ALTERNATING WITH A BLACK STRIPE.

THE STRIPES SHALL SLOPE DOWN TOWARD THE CENTER OF ROADWAY.

DELINEATORS SHALL BE MOUNTED ON U-TYPE POSTS FABRICATED FROM ROLLED-RAIL STEEL 1.33 LB./FT. MINIMUM.

THE BOTTOM OF THE DELINEATOR PANEL SHALL BE 12" ABOVE THE PAVEMENT EDGE ELEVATION.

VDOT ROAD AND BRIDGE STANDARDS	ROAD EDGE DELINEATOR TYPICAL DETAILS VIRGINIA DEPARTMENT OF TRANSPORTATION	SPECIFICATION REFERENCE
SHEET 1 OF 1 / REVISION DATE		702
1327.10		

ED-3

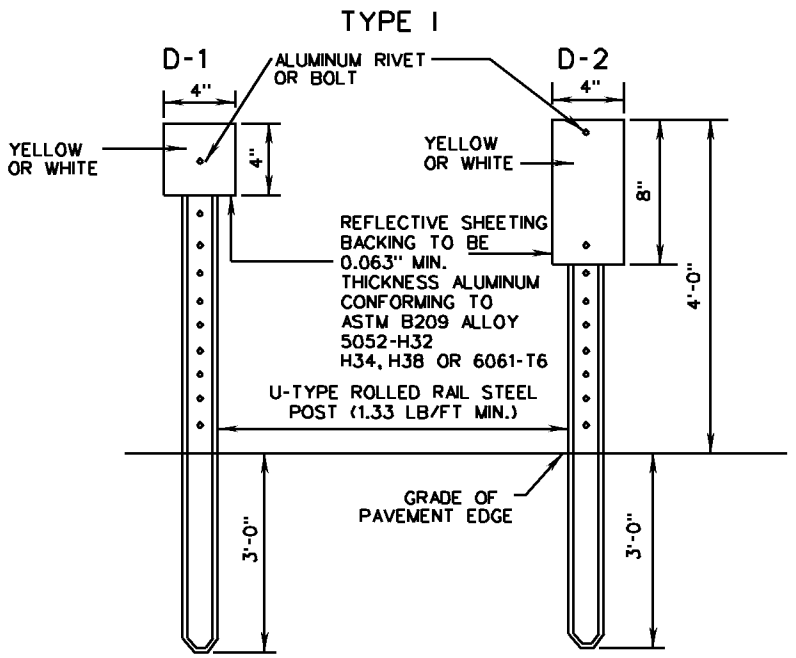

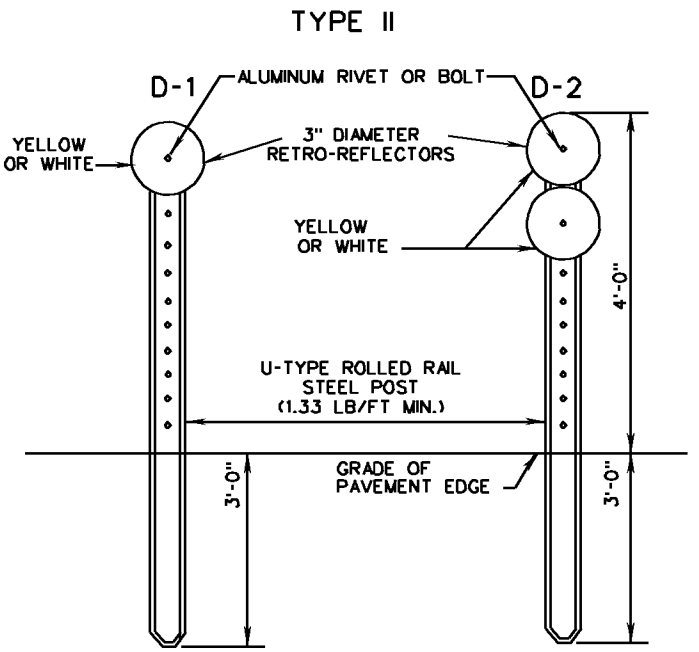

NOTES:

ROAD EDGE DELINEATORS ARE TO BE ERECTED TWO FEET BEYOND THE OUTER EDGE OF THE SHOULDER OR THE FACE OF UNMOUNTABLE CURB.

D-1 DELINEATORS SHALL BE PLACED ON THE RIGHT OF THROUGH ROADWAYS AT 528 FOOT SPACING WITH THE FOLLOWING EXCEPTIONS:

TANGENT ROADWAYS WHERE PAVEMENT MARKERS ARE INSTALLED WILL NOT REQUIRE THE INSTALLATION OF DELINEATORS.

LOCATIONS WHERE DELINEATORS ARE INSTALLED ON GUARDRAILS, PARAPETS OR BARRIERS ON THE RIGHT OF THE ROADWAY WILL NOT REQUIRE THE INSTALLATION OF ROAD EDGE DELINEATORS.

D-1 DELINEATORS SHALL BE PLACED ON AT LEAST ONE SIDE AND ON THE OUTSIDE CURVE OF INTERCHANGE RAMPS EXCEPT WHERE DELINEATORS ARE INSTALLED ON GUARDRAILS, PARAPETS OR BARRIERS. THE SPACING ALONG THE RAMPS SHALL BE AT 100' INTERVALS EXCEPT IN HORIZONTAL CURVES WHERE THE SPACING SHALL CONFORM TO THE CHART ON SPACING FOR HIGHWAY DELINEATORS.

D-2 DELINEATORS SHALL BE PLACED ON ACCELERATION AND DECELERATION LANES AT 100' SPACING.

THE COLOR OF DELINEATORS SHALL CONFORM TO THE COLOR OF THE ADJACENT EDGELINES.

SPACING FOR HIGHWAY DELINEATORS ON HORIZONTAL CURVES

DISTANCE IN FEET ROUNDED TO THE NEAREST 5'.

RADIUS OF CURVE IN FEET	SPACING ON CURVE IN FEET
50	20
150	30
200	35
250	40
300	50
400	55
500	65
600	70
700	75
800	80
900	85
1000	90

SPACING FOR SPECIFIC RADII NOT SHOWN MAY BE INTERPOLATED FROM TABLE. THE MINIMUM SPACING SHOULD BE 20'. THE SPACING ON CURVES SHOULD NOT EXCEED 300'. IN ADVANCE OF OR BEYOND A CURVE, AND PROCEEDING AWAY FROM THE END OF THE CURVE, THE SPACING OF THE FIRST DELINEATOR IS 2S, THE SECOND IS 3S AND THE THIRD IS 6S BUT NOT TO EXCEED 300'. S REFERS TO THE DELINEATOR SPACING, IN FEET, FOR SPECIFIC RADII COMPUTED FROM THE FORMULA $S = 3\sqrt{R-50}$

SPECIFICATION REFERENCE	INTERSTATE ROAD EDGE DELINEATORS	VDOT ROAD AND BRIDGE STANDARDS
702	TYPICAL DETAILS VIRGINIA DEPARTMENT OF TRANSPORTATION	REVISION DATE 6-15-09 SHEET 1 OF 1 1327.20

MM-1

MOUNTING DETAIL

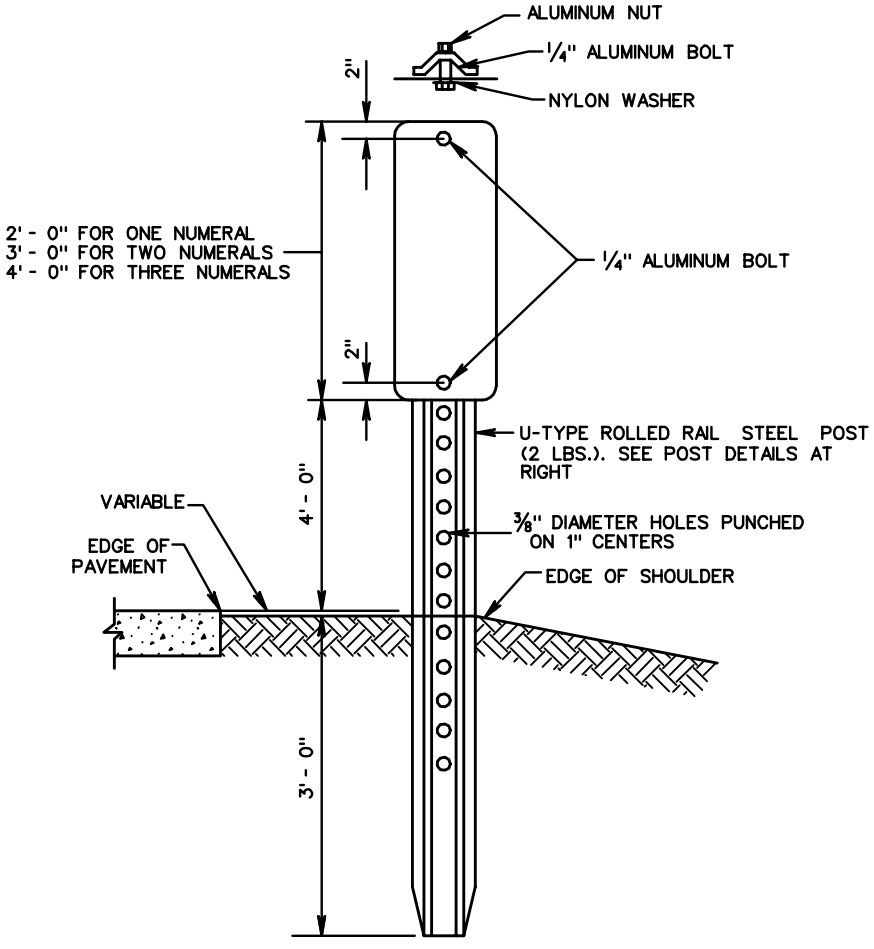

USP-1

SPLICING DETAIL

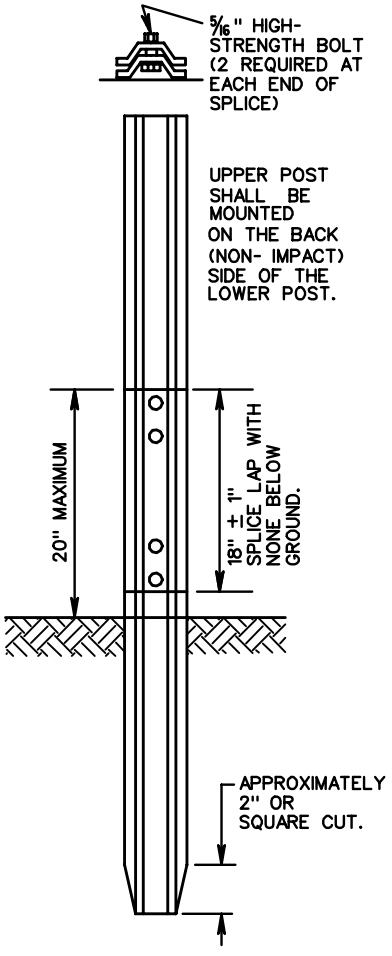

POST SECTION DIMENSIONS

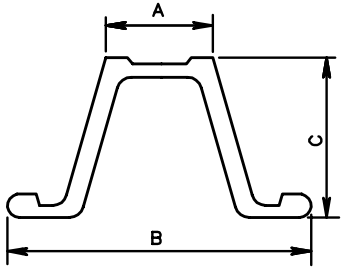

1.33 LB./LF

MINIMUM	MAXIMUM
A. 1/2"	1"
B. 2"	2 1/4"
C. 3/4"	1 1/4"

2.00 LB./LF

MINIMUM	MAXIMUM
A. 1 13/64 "	1 9/32 "
B. 3 1/16"	3 1/8"
C. 1 27/64 "	1 33/64 "

NOTES:

DRIVING CAP TO BE USED WHEN DRIVING POST.

PANEL TO BE FABRICATED OF ASTM B209 ALLOY 6061-T6 OR 5052-H38, 0.080 THICK.

TOP OF PANEL TO BE FLUSH WITH TOP OF POST.

ERECTION

MILEPOST MARKERS TO BE LOCATED IN LINE WITH DELINEATOR POSTS, EDGE OF SHOULDER OR BACK OF GUARDRAIL, IF PRESENT.

VDOT
ROAD AND BRIDGE STANDARDS

SHEET 1 OF 1 | REVISION DATE
1328.10

MILEPOST MARKERS & U-TYPE STEEL POST

TYPICAL STRUCTURE DETAILS

VIRGINIA DEPARTMENT OF TRANSPORTATION

SPECIFICATION REFERENCE
701
702

STANDARD

THIS PAGE INTENTIONALLY LEFT BLANK

SPECIFICATION REFERENCE	TITLE VIRGINIA DEPARTMENT OF TRANSPORTATION	VDOT ROAD AND BRIDGE STANDARDS REVISION DATE	SHEET 1 OF 1 ____._

ISD-1

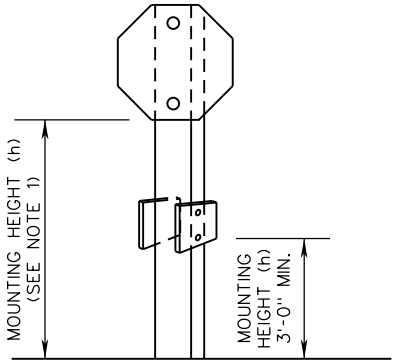

ONE WAY SIGNS
ON EXIT RAMPS
WITH STOP SIGN

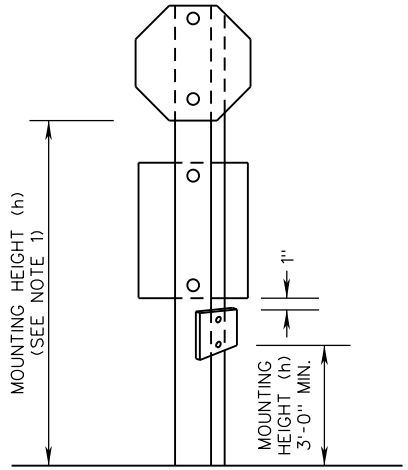

STOP OR YIELD SIGNS AND
DO NOT ENTER SIGN
(AT EXIT RAMPS ONLY)

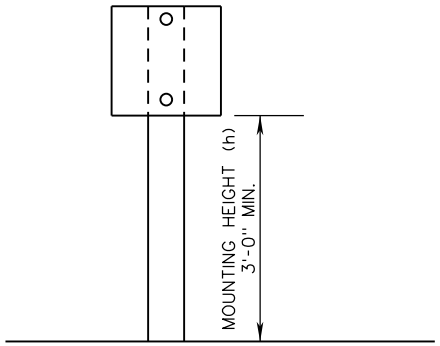

WRONG WAY SIGNS/
DO NOT ENTER SIGNS
(AT EXIT RAMPS ONLY)

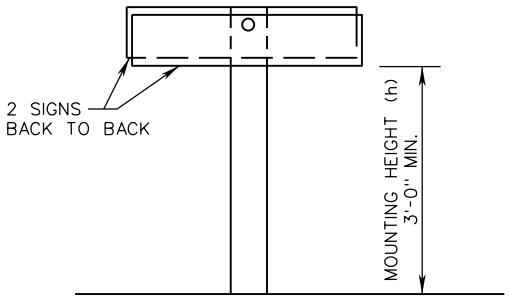

ONE WAY SIGNS
ON EXIT RAMPS

NOTES:

1. MOUNTING HEIGHT (h) SHALL BE IN ACCORDANCE WITH STP-1 SHEET 1 OF 12 EXCEPT AS NOTED ON THIS SHEET.
2. MOUNTING HEIGHTS (h) ARE MEASURED FROM BOTTOM OF SIGN PANEL TO ROADWAY ELEVATION AT EDGE OF TRAVELWAY OR TOP OF CURB.

A COPY OF THE ORIGINAL SEALED AND SIGNED DRAWING IS ON FILE IN THE CENTRAL OFFICE.

VDOT ROAD AND BRIDGE STANDARDS	INTERCHANGE EXIT RAMP SIGNING DETAILS MOUNTING HEIGHTS OF SIGN INSTALLATIONS VIRGINIA DEPARTMENT OF TRANSPORTATION	SPECIFICATION REFERENCE
SHEET 1 OF 1 / 1329.10	REVISION DATE NEW 08/17	700

PM-1

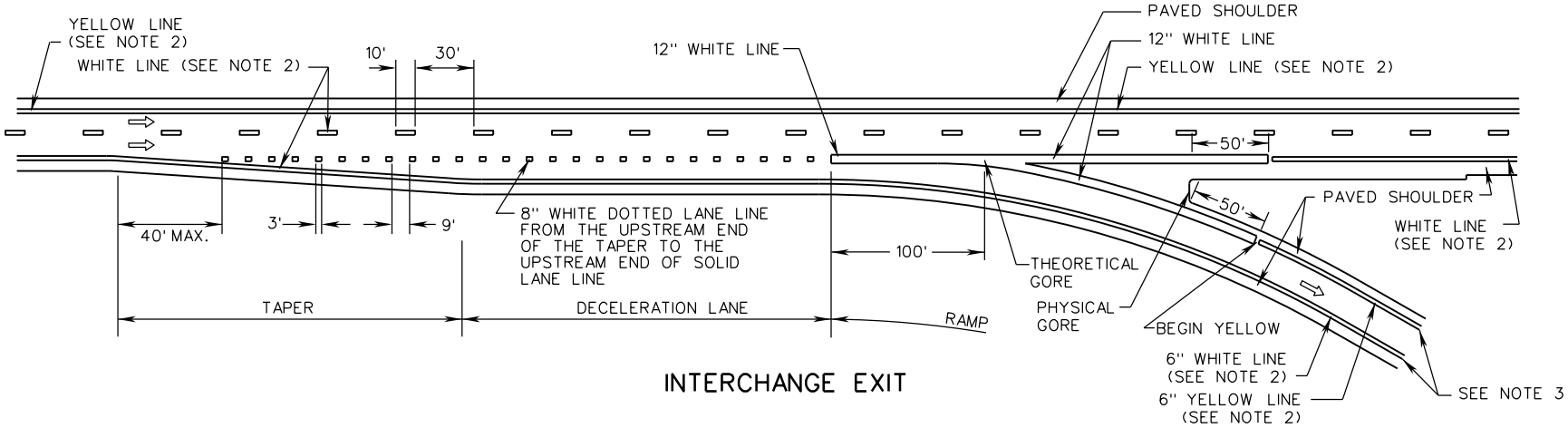

INTERCHANGE EXIT

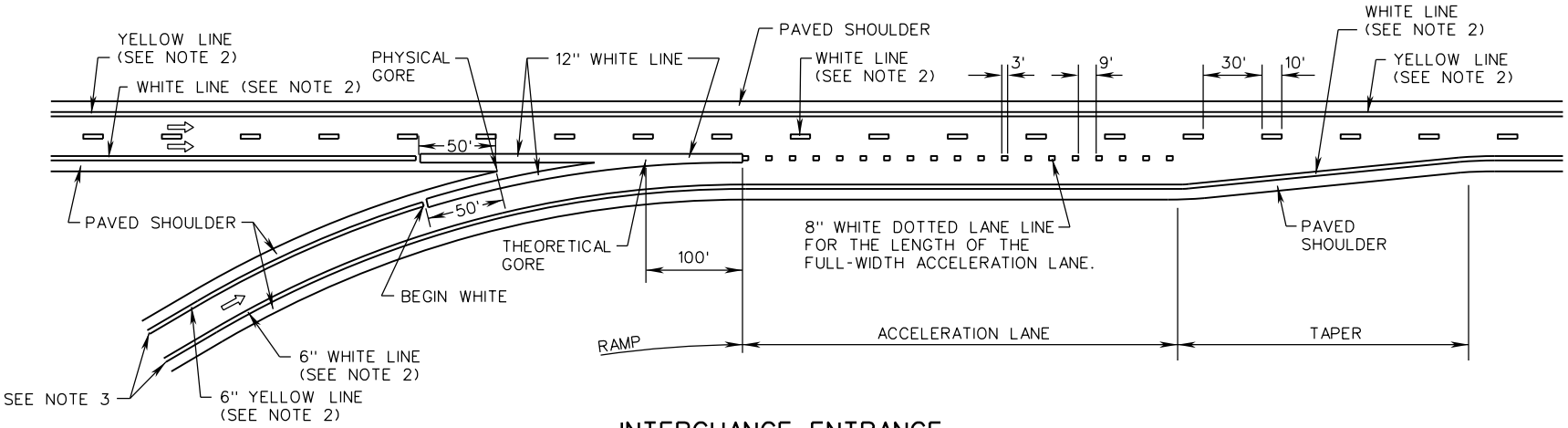

INTERCHANGE ENTRANCE

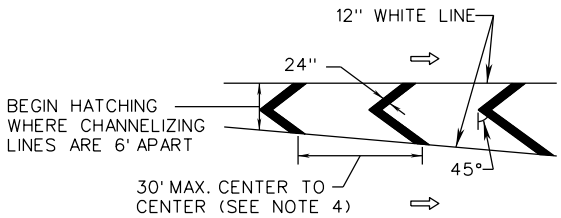

GORE AREA HATCHING (OPTIONAL)

⇨ INDICATES DIRECTION OF TRAVEL

NOTES:

1. ALL PAVEMENT MARKINGS SHALL BE INSTALLED IN ACCORDANCE WITH THESE STANDARDS, THE MUTCD, AND THE VIRGINIA SUPPLEMENT TO THE MUTCD, UNLESS OTHERWISE SPECIFIED IN THE CONTRACT DOCUMENTS.
2. THE PAVEMENT MARKING FOR THE LANE LINE AND EDGE LINE MARKINGS OF INTERSTATE AND OTHER LIMITED - ACCESS HIGHWAYS SHALL BE 6" WIDE, UNLESS OTHERWISE NOTED IN THE CONTRACT DOCUMENTS.
3. CONTINUE EDGELINE WIDTH TO THE TERMINATION POINT SPECIFIED IN THE CONTRACT DOCUMENTS.
4. IF GORE AREA HATCHING IS PROVIDED, THERE SHALL BE A MINIMUM OF THREE CHEVRONS. SPACING MAY BE REDUCED IN ORDER TO FIT THIS MINIMUM.

SPECIFICATION REFERENCE	A COPY OF THE ORIGINAL SEALED AND SIGNED DRAWING IS ON FILE IN THE CENTRAL OFFICE.	VDOT ROAD AND BRIDGE STANDARDS	
704	TYPICAL PAVEMENT MARKING INTERCHANGE VIRGINIA DEPARTMENT OF TRANSPORTATION	REVISION DATE 04/19	SHEET 1 OF 1 1330.10

PM-2

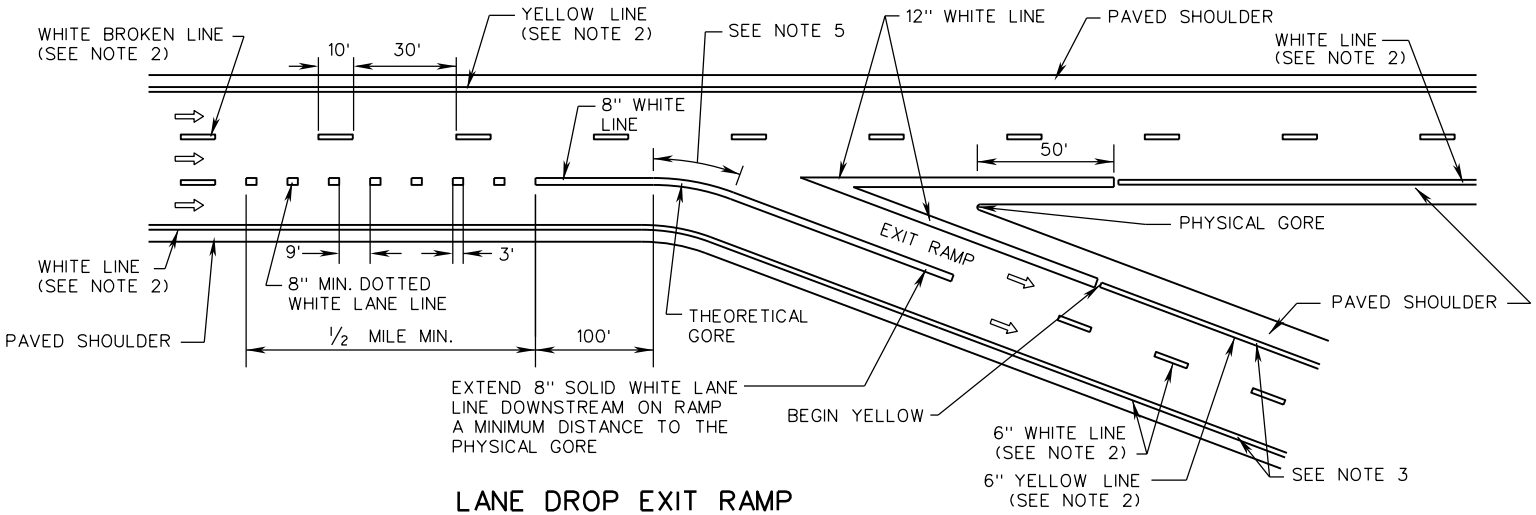

LANE DROP EXIT RAMP BESIDE OPTIONAL EXIT LANE

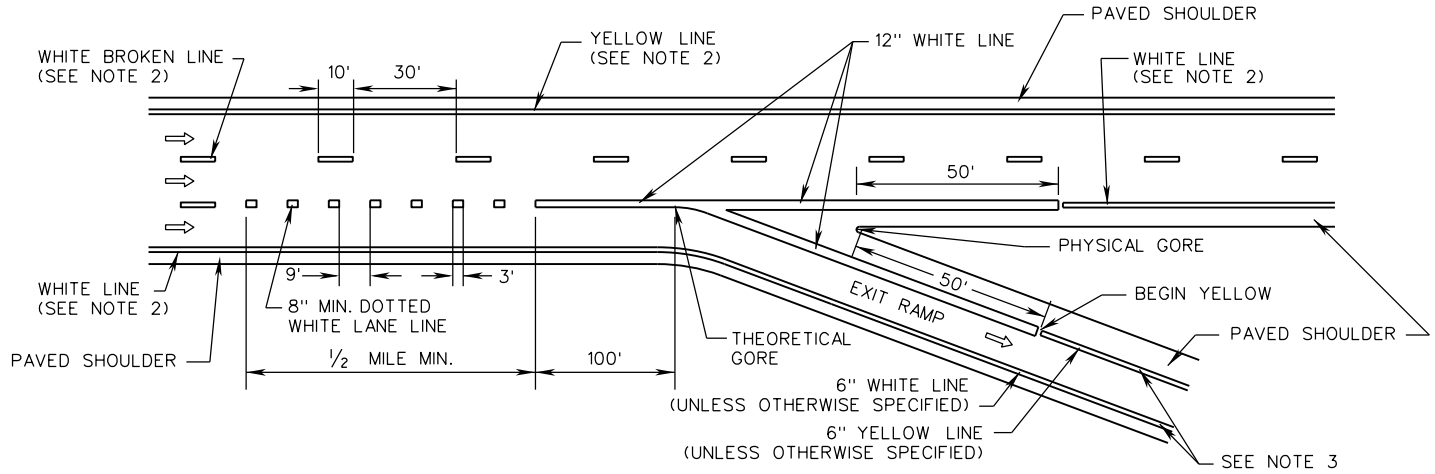

LANE DROP EXIT RAMP

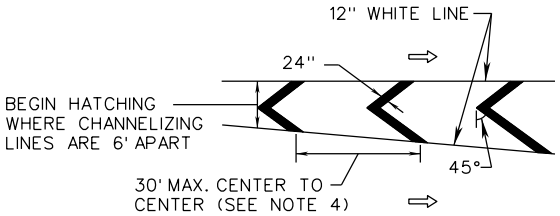

GORE AREA HATCHING (OPTIONAL)

⇨ INDICATES DIRECTION OF TRAVEL

NOTES:

1. ALL PAVEMENT MARKINGS SHALL BE INSTALLED IN ACCORDANCE WITH THESE STANDARDS, THE MUTCD AND THE VIRGINIA SUPPLEMENT TO THE MUTCD, UNLESS OTHERWISE SPECIFIED IN THE CONTRACT DOCUMENTS.
2. THE PAVEMENT MARKING FOR THE LANE LINE AND EDGE LINE MARKINGS OF INTERSTATE AND OTHER LIMITED - ACCESS HIGHWAYS SHALL BE 6" WIDE, UNLESS OTHERWISE NOTED IN THE CONTRACT DOCUMENTS.
3. CONTINUE EDGELINE WIDTH TO THE TERMINATION POINT SPECIFIED IN THE CONTRACT DOCUMENTS.
4. IF GORE AREA HATCHING IS PROVIDED, THERE SHALL BE A MINIMUM OF THREE CHEVRONS. SPACING MAY BE REDUCED IN ORDER TO FIT THIS MINIMUM.
5. SOLID LINE AT THEORETICAL GORE POINT OF A MULTILANE EXIT RAMP WITH OPTIONAL EXIT LANE SHALL BE CURVED TO MATCH RADIUS OF OFF RAMP (SHALL NOT BE SHARP CORNER).

VDOT ROAD AND BRIDGE STANDARDS	A COPY OF THE ORIGINAL SEALED AND SIGNED DRAWING IS ON FILE IN THE CENTRAL OFFICE.		SPECIFICATION REFERENCE
SHEET 1 OF 1	TYPICAL PAVEMENT MARKING INTERCHANGE LANE DROPS	REVISION DATE 04/19	704
1330.20	VIRGINIA DEPARTMENT OF TRANSPORTATION		

PATTERNS OF LONGITUDINAL LINES

THRU LANES: USE BROKEN LINE (10' LINE SEGMENTS / 30' GAPS).

TAPERS MORE THAN 100': USE DOTTED EXTENSION (2' LINE SEGMENTS / 6' GAPS).

TAPERS 100' OR LESS: DO NOT USE DOTTED EXTENSION UNLESS SPECIFIED IN THE CONTRACT DOCUMENTS.

NOTES:

1. STOP LINES SHALL BE 24 INCHES IN WIDTH.
2. ALL PAVEMENT MARKINGS SHALL BE INSTALLED IN ACCORDANCE WITH THESE STANDARDS, THE MUTCD, AND THE VIRGINIA SUPPLEMENT TO THE MUTCD, UNLESS OTHERWISE SPECIFIED IN THE CONTRACT DOCUMENTS.
3. THE LOCATION, WIDTH, AND TYPE OF THE PAVEMENT MARKINGS SHALL BE AS SPECIFIED IN THE CONTRACT DOCUMENTS.
4. TURN ARROWS SHALL BE IN ACCORDANCE WITH SHEET 3.
5. CROSSWALK MARKINGS, IF PROVIDED, SHALL BE IN ACCORDANCE WITH SHEET 4.
6. YELLOW EDGE LINES AT MEDIAN NOSES SHALL TERMINATE IN ACCORDANCE WITH SHEET 3.

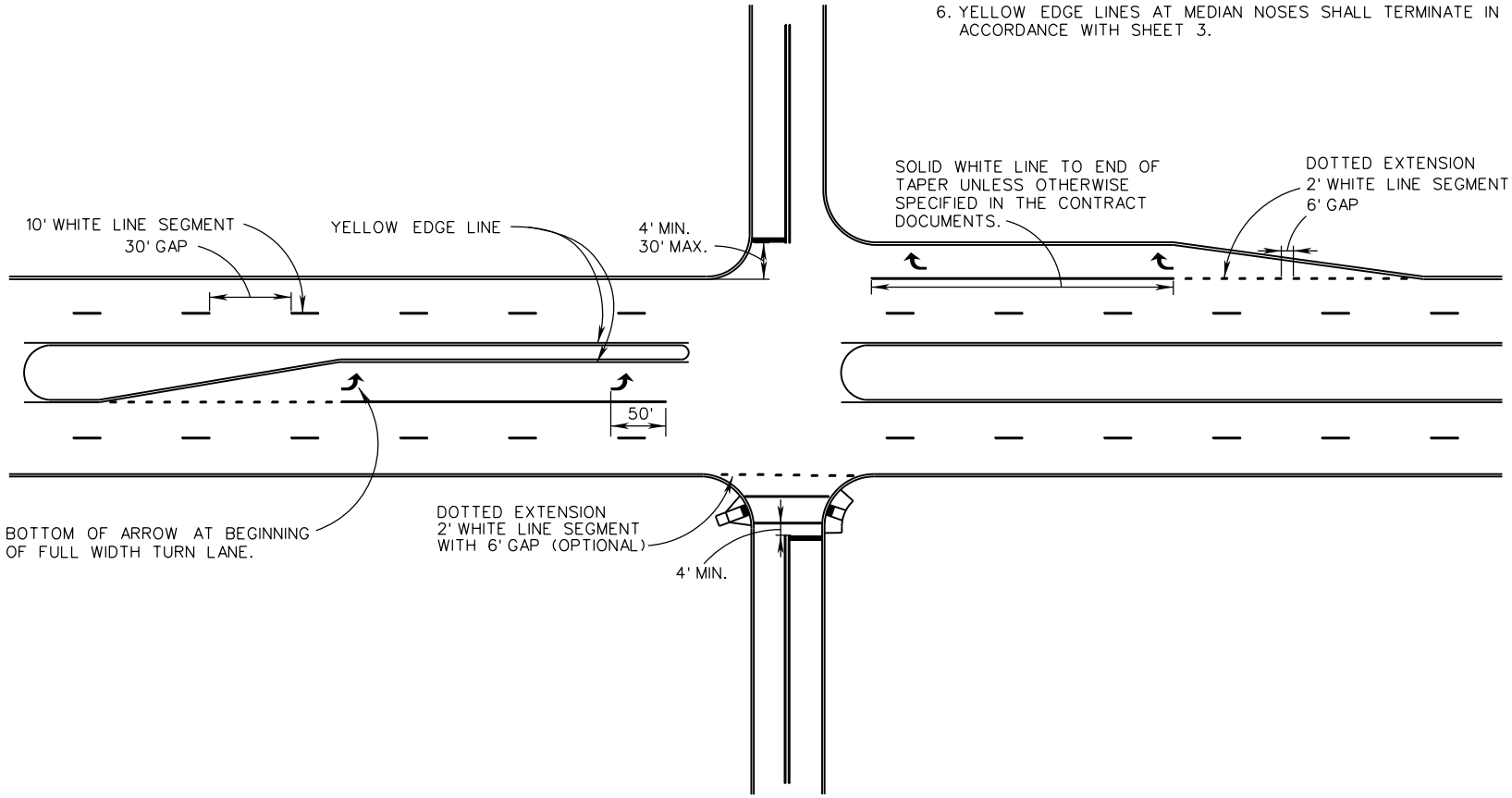

SPECIFICATION REFERENCE	A COPY OF THE ORIGINAL SEALED AND SIGNED DRAWING IS ON FILE IN THE CENTRAL OFFICE.	VDOT ROAD AND BRIDGE STANDARDS	
704	TYPICAL PAVEMENT MARKING UNSIGNALIZED INTERSECTIONS VIRGINIA DEPARTMENT OF TRANSPORTATION	REVISION DATE 04/19	SHEET 1 OF 4 1330.30

PM-3

NOTES:

1. STOP LINES SHALL BE 24 INCHES IN WIDTH.
2. ALL PAVEMENT MARKINGS SHALL BE INSTALLED IN ACCORDANCE WITH THESE STANDARDS, THE MUTCD, AND THE VIRGINIA SUPPLEMENT TO THE MUTCD, UNLESS OTHERWISE SPECIFIED IN THE CONTRACT DOCUMENTS.
3. THE LOCATION, WIDTH, AND TYPE OF THE PAVEMENT MARKINGS SHALL BE AS SPECIFIED IN THE CONTRACT DOCUMENTS.
4. TURN ARROWS SHALL BE IN ACCORDANCE WITH SHEET 3.
5. CROSSWALK MARKINGS, IF PROVIDED, SHALL BE IN ACCORDANCE WITH SHEET 4.
6. YELLOW EDGE LINES AT MEDIAN NOSES SHALL TERMINATE IN ACCORDANCE WITH SHEET 3.

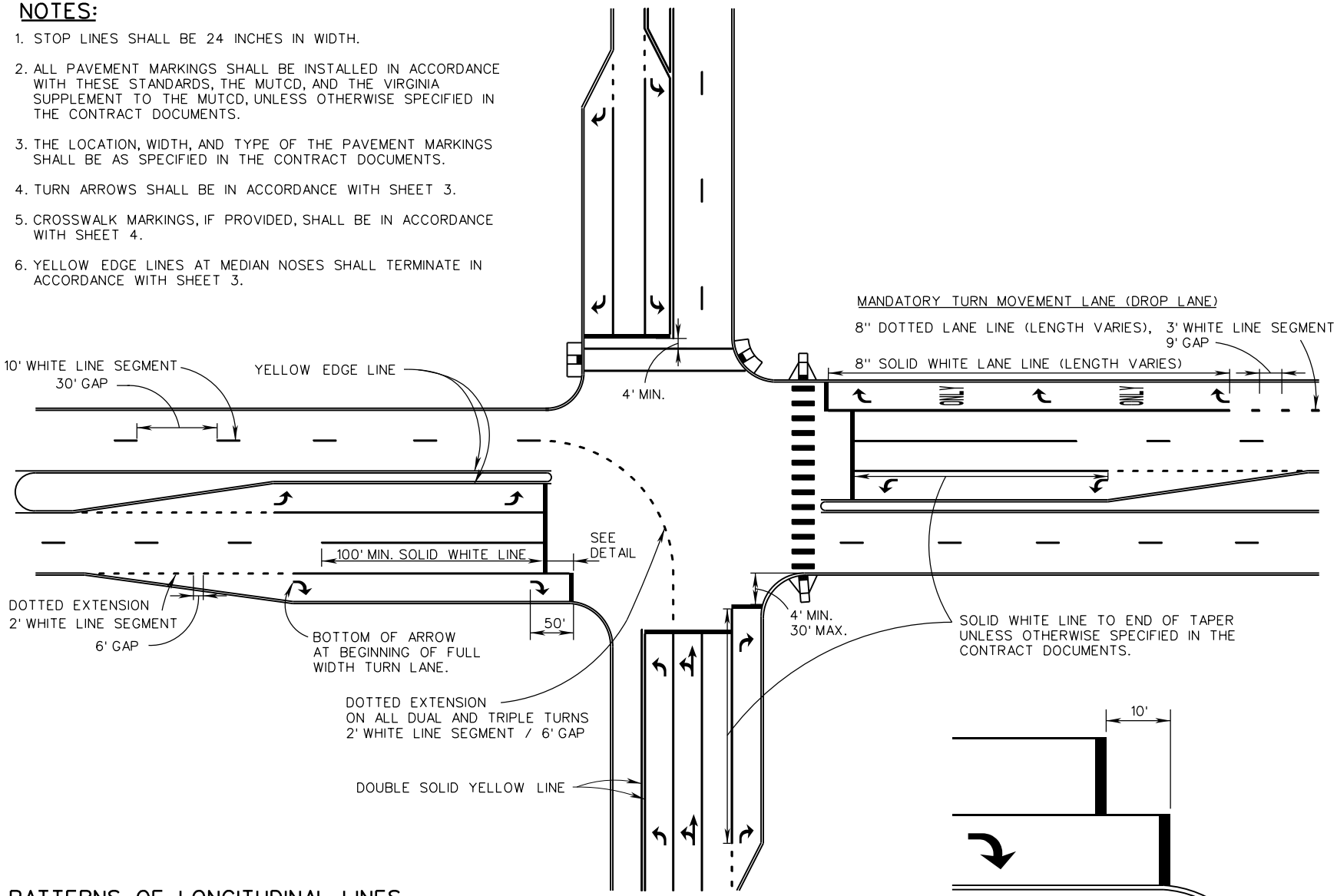

DETAIL FOR OPTIONAL STAGGERED STOP LINES (ON A LANE-BY-LANE BASIS)

PATTERNS OF LONGITUDINAL LINES

THRU LANES: USE BROKEN LINE (10' LINE SEGMENTS / 30' GAPS).

TAPERS MORE THAN 100': USE DOTTED EXTENSION (2' LINE SEGMENTS / 6' GAPS).

TAPERS 100' OR LESS: DO NOT USE DOTTED EXTENSION UNLESS SPECIFIED IN THE CONTRACT DOCUMENTS.

VDOT ROAD AND BRIDGE STANDARDS	A COPY OF THE ORIGINAL SEALED AND SIGNED DRAWING IS ON FILE IN THE CENTRAL OFFICE.		SPECIFICATION REFERENCE
SHEET 2 OF 4	TYPICAL PAVEMENT MARKING		704
1330.31	SIGNALIZED INTERSECTIONS	REVISION DATE 04/19	
	VIRGINIA DEPARTMENT OF TRANSPORTATION		

TURN ARROWS

TURN ARROWS REQUIRED IN ACCORDANCE WITH THE FOLLOWING, UNLESS OTHERWISE SPECIFIED IN THE CONTRACT DOCUMENTS.

TURN LANE LENGTH	NUMBER AND POSITION OF ARROWS
LESS THAN 100' (EXCLUSIVE OF TAPER): 1 ARROW	1 ARROW LOCATED AT THE BEGINNING OF THE SOLID LANE LINE.
100' TO 300' (EXCLUSIVE OF TAPER): 2 ARROWS	1 ARROW LOCATED AT BEGINNING OF FULL WIDTH TURN LANE. 1 ARROW LOCATED 50' BACK FROM STOP LINE OR END OF LANE LINE.
GREATER THAN 300' (EXCLUSIVE OF TAPER): 3 ARROWS	1 ARROW LOCATED AT BEGINNING OF FULL WIDTH TURN LANE. 1 ARROW LOCATED 50' BACK FROM STOP LINE OR END LANE LINE. 1 ARROW LOCATED AT MIDPOINT BETWEEN THE OTHER TWO ARROWS.

NOTES:

1. ALL PAVEMENT MARKINGS SHALL BE INSTALLED IN ACCORDANCE WITH THESE STANDARDS, THE MUTCD, AND THE VIRGINIA SUPPLEMENT TO THE MUTCD, UNLESS OTHERWISE SPECIFIED IN THE CONTRACT DOCUMENTS.
2. THE LOCATION, WIDTH, AND TYPE OF THE PAVEMENT MARKINGS SHALL BE AS SPECIFIED IN THE CONTRACT DOCUMENTS.
3. WHEN "ONLY" WORD MARKINGS ARE USED, THESE MARKINGS SHALL BE SPACED MIDWAY BETWEEN THE TURN ARROWS.
4. CROSSWALK MARKINGS, IF PROVIDED, SHALL BE IN ACCORDANCE WITH SHEET 4.

MANDATORY TURN MOVEMENT LANES (DROP LANE)

MARKINGS REQUIRED IN ACCORDANCE WITH THE FOLLOWING, UNLESS OTHERWISE SPECIFIED IN THE CONTRACT DOCUMENTS.

TURN ARROWS	1 ARROW LOCATED AT BEGINNING WIDE WHITE SOLID LANE LINE. 1 ARROW LOCATED 50' BACK FROM STOP LINE. 1 ARROW LOCATED AT MIDPOINT OF 8" WHITE SOLID LANE LINE.
ONLY WORD MARKINGS	SPACED MIDWAY BETWEEN ARROWS.

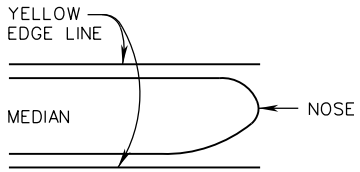

DETAIL FOR YELLOW EDGE LINES AT MEDIANS

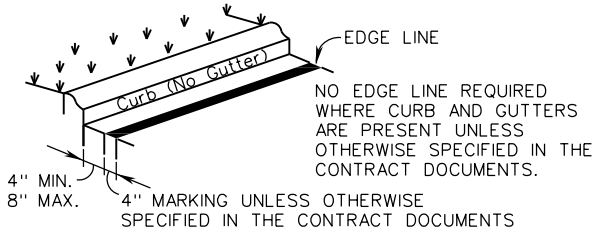

DETAIL FOR LOCATION OF EDGE LINES ON CURB SECTIONS OF ROADWAY (NO GUTTER)

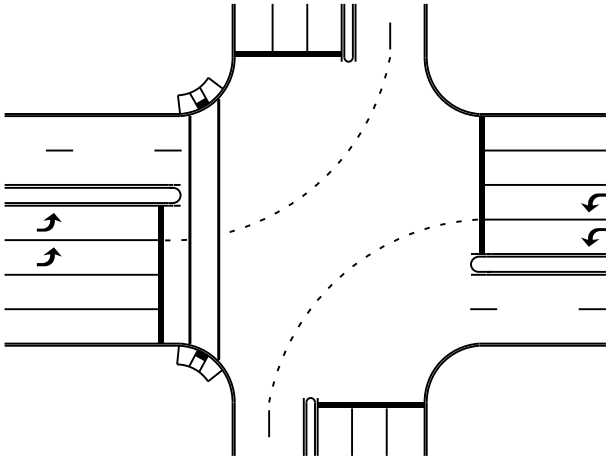

DETAIL FOR DOTTED EXTENSION THROUGH INTERSECTION AT DUAL TURN LANES

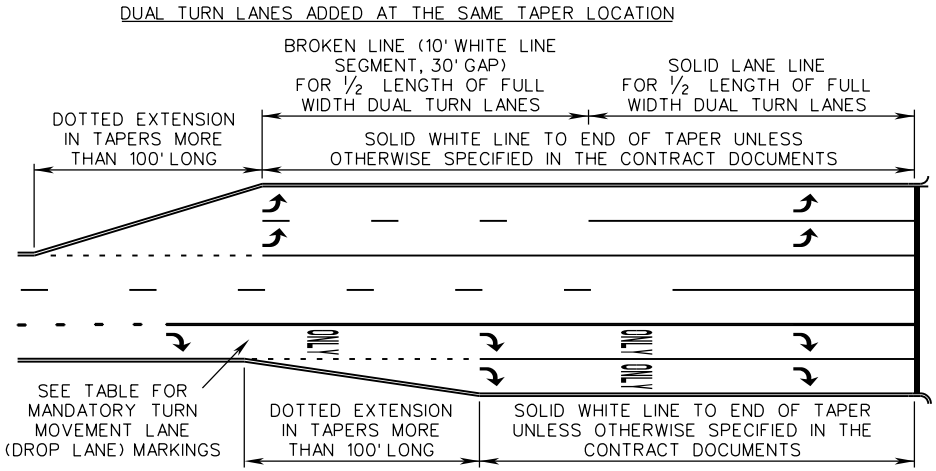

DETAIL FOR LANE LINE MARKINGS AT DUAL TURN LANES

SPECIFICATION REFERENCE	A COPY OF THE ORIGINAL SEALED AND SIGNED DRAWING IS ON FILE IN THE CENTRAL OFFICE.	VDOT ROAD AND BRIDGE STANDARDS
704	TYPICAL PAVEMENT MARKING INTERSECTION DETAILS VIRGINIA DEPARTMENT OF TRANSPORTATION	REVISION DATE 04/19 SHEET 3 OF 4 1330.32

PM-3

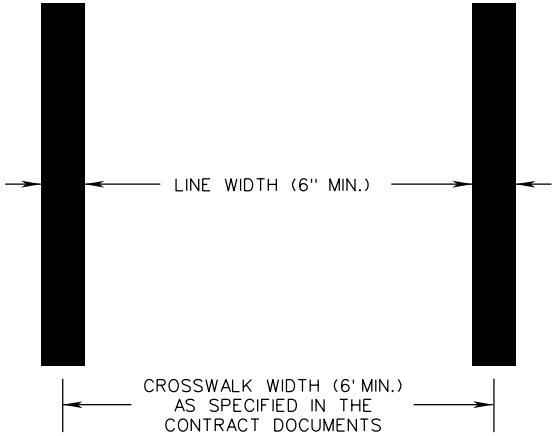

CROSSWALK WIDTH
(TRANSVERSE LINES)

NOTES:

1. ALL PAVEMENT MARKINGS SHALL BE INSTALLED IN ACCORDANCE WITH THESE STANDARDS, THE MUTCD AND THE VIRGINIA SUPPLEMENT TO THE MUTCD, UNLESS OTHERWISE SPECIFIED IN THE CONTRACT DOCUMENTS.
2. THE LOCATION, WIDTH, AND TYPE OF THE PAVEMENT MARKINGS SHALL BE AS SPECIFIED IN THE CONTRACT DOCUMENTS.
3. CROSSWALKS SHALL ALIGN WITH CURB RAMPS IN ACCORDANCE WITH STANDARD CG-12. THE CROSSWALK SHALL BE AT LEAST AS WIDE AS THE LEVEL LANDING AREA OF THE CURB RAMP.
4. WHEN LONGITUDINAL LINES ARE SPECIFIED FOR THE CROSSWALK, THE LONGITUDINAL LINES SHALL BE PARALLEL TO THE PATH OF THRU TRAFFIC.
5. GAPS BETWEEN LONGITUDINAL LINES SHALL BE BETWEEN 2 - 5 FEET. GAP SPACING MAY VARY IN ORDER TO ALIGN LINES SUCH THAT THEY ARE OUTSIDE THE WHEEL PATHS OF THRU TRAFFIC. THE FIRST AND LAST LINES SHALL BE 2' MAXIMUM FROM EDGE OF SHOULDER OR EDGE OF GUTTER PAN.

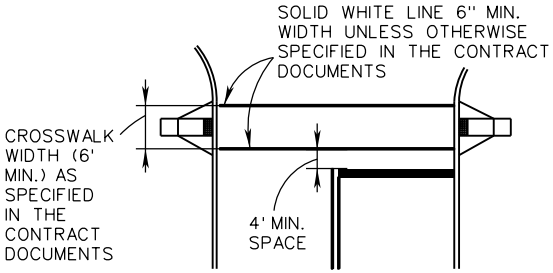

TRANSVERSE LINES

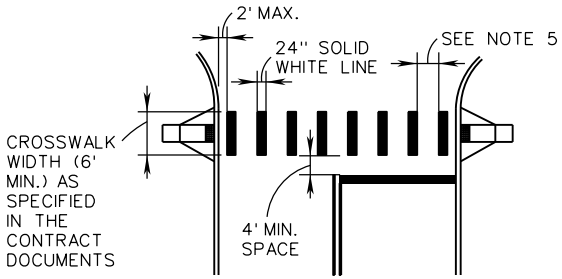

LONGITUDINAL LINES

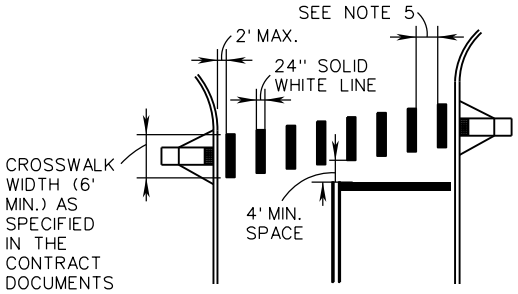

LONGITUDINAL LINES
AT SKEWED INTERSECTIONS
(SEE NOTE 4)

VDOT ROAD AND BRIDGE STANDARDS	A COPY OF THE ORIGINAL SEALED AND SIGNED DRAWING IS ON FILE IN THE CENTRAL OFFICE.		SPECIFICATION REFERENCE
SHEET 4 OF 4	TYPICAL PAVEMENT MARKING	REVISION DATE	
1330.33	CROSSWALK MARKINGS	NEW 01/15	704
	VIRGINIA DEPARTMENT OF TRANSPORTATION		

NOTES:

1. ALL PAVEMENT MARKINGS SHALL BE INSTALLED IN ACCORDANCE WITH THESE STANDARDS, THE MUTCD, AND THE VIRGINIA SUPPLEMENT TO THE MUTCD, UNLESS OTHERWISE SPECIFIED IN THE CONTRACT DOCUMENTS.
2. TAPER LENGTH SHALL BE PER THESE STANDARDS UNLESS OTHERWISE SPECIFIED IN THE CONTRACT DOCUMENTS.
3. TAPERS MORE THAN 100': USE DOTTED EXTENSION (2' LINE SEGMENTS / 6' GAPS).
   TAPERS 100' OR LESS: DO NOT USE DOTTED EXTENSION UNLESS SPECIFIED IN THE CONTRACT DOCUMENTS.
4. TURN ARROWS SHALL BE IN ACCORDANCE WITH PM-3.
5. LONGITUDINAL LINES SHALL BE 4" WIDE UNLESS OTHERWISE NOTED IN THE CONTRACT DOCUMENTS.

TAPER LENGTH (T) TABLE

		T		
SPEED	TAPER RATIO	10 FT TURN LANE WIDTH	11 FT TURN LANE WIDTH	12 FT TURN LANE WIDTH
≤ 30 MPH	8:1	80'	90'	100'
> 30 MPH	15:1	150'	175'	200'

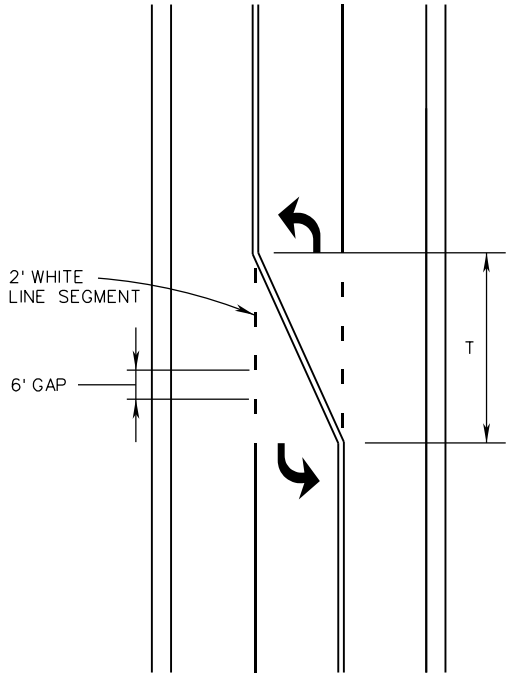

SPECIFICATION REFERENCE	A COPY OF THE ORIGINAL SEALED AND SIGNED DRAWING IS ON FILE IN THE CENTRAL OFFICE.	VDOT ROAD AND BRIDGE STANDARDS
704	TYPICAL PAVEMENT MARKING LEFT TURN PAVEMENT MARKED MEDIAN VIRGINIA DEPARTMENT OF TRANSPORTATION	REVISION DATE 04/19 SHEET 1 OF 2 1330.50

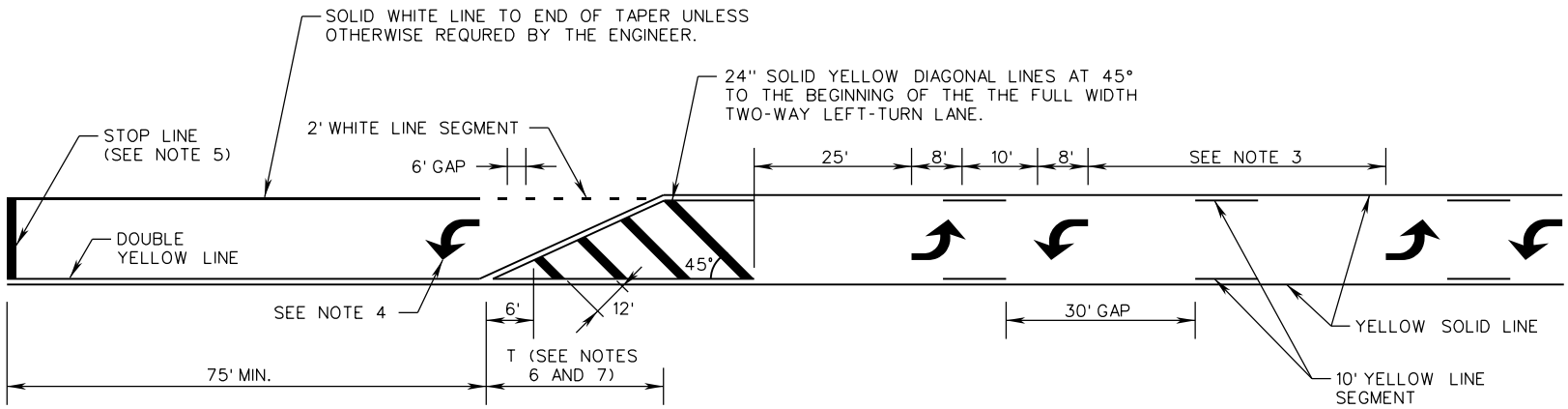

TYPE A

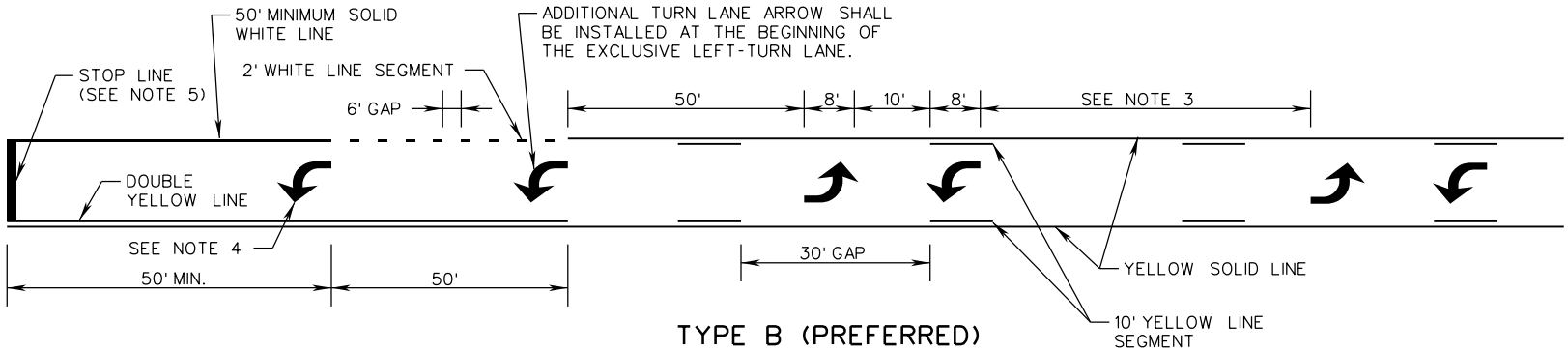

TYPE B (PREFERRED)

NOTES:

1. ALL PAVEMENT MARKINGS SHALL BE INSTALLED IN ACCORDANCE WITH THESE STANDARDS, THE MUTCD, AND THE VIRGINIA SUPPLEMENT TO THE MUTCD, UNLESS OTHERWISE SPECIFIED IN THE CONTRACT DOCUMENTS.
2. LONGITUDINAL LINES SHALL BE 4" WIDE UNLESS OTHERWISE NOTED IN THE CONTRACT DOCUMENTS.
3. TYPICAL SPACING BETWEEN OPPOSING TURN ARROWS SHALL BE 1000 FEET. SPACING CAN BE INCREASED OR DECREASED AS DETERMINED BY THE ENGINEER.
4. TURN ARROWS SHALL BE IN ACCORDANCE WITH PM-3.
5. STOP LINES SHALL BE 24 INCHES IN WIDTH. STOP LINES SHALL ONLY BE USED AT SIGNALIZED INTERSECTIONS OR ON STOP-CONTROLLED APPROACHES.
6. REFER TO THE TAPER LENGTH TABLE ON SHEET 1 FOR "T". TAPER LENGTH SHALL BE AS SPECIFIED IN THE CONTRACT DOCUMENTS.
7. TAPERS MORE THAN 100': USE DOTTED EXTENSION (2' LINE SEGMENTS / 6' GAPS). TAPERS 100' OR LESS: DO NOT USE DOTTED EXTENSION UNLESS SPECIFIED IN THE CONTRACT DOCUMENTS.

VDOT ROAD AND BRIDGE STANDARDS	A COPY OF THE ORIGINAL SEALED AND SIGNED DRAWING IS ON FILE IN THE CENTRAL OFFICE.		SPECIFICATION REFERENCE
SHEET 2 OF 2	TYPICAL PAVEMENT MARKING	REVISION DATE	704
1330.51	TWO-WAY LEFT-TURN LANE	04/19	
	VIRGINIA DEPARTMENT OF TRANSPORTATION		

STANDARD

THIS PAGE INTENTIONALLY LEFT BLANK

SPECIFICATION REFERENCE	TITLE VIRGINIA DEPARTMENT OF TRANSPORTATION	VDOT ROAD AND BRIDGE STANDARDS REVISION DATE	SHEET 1 OF 1 ____._

PM-6

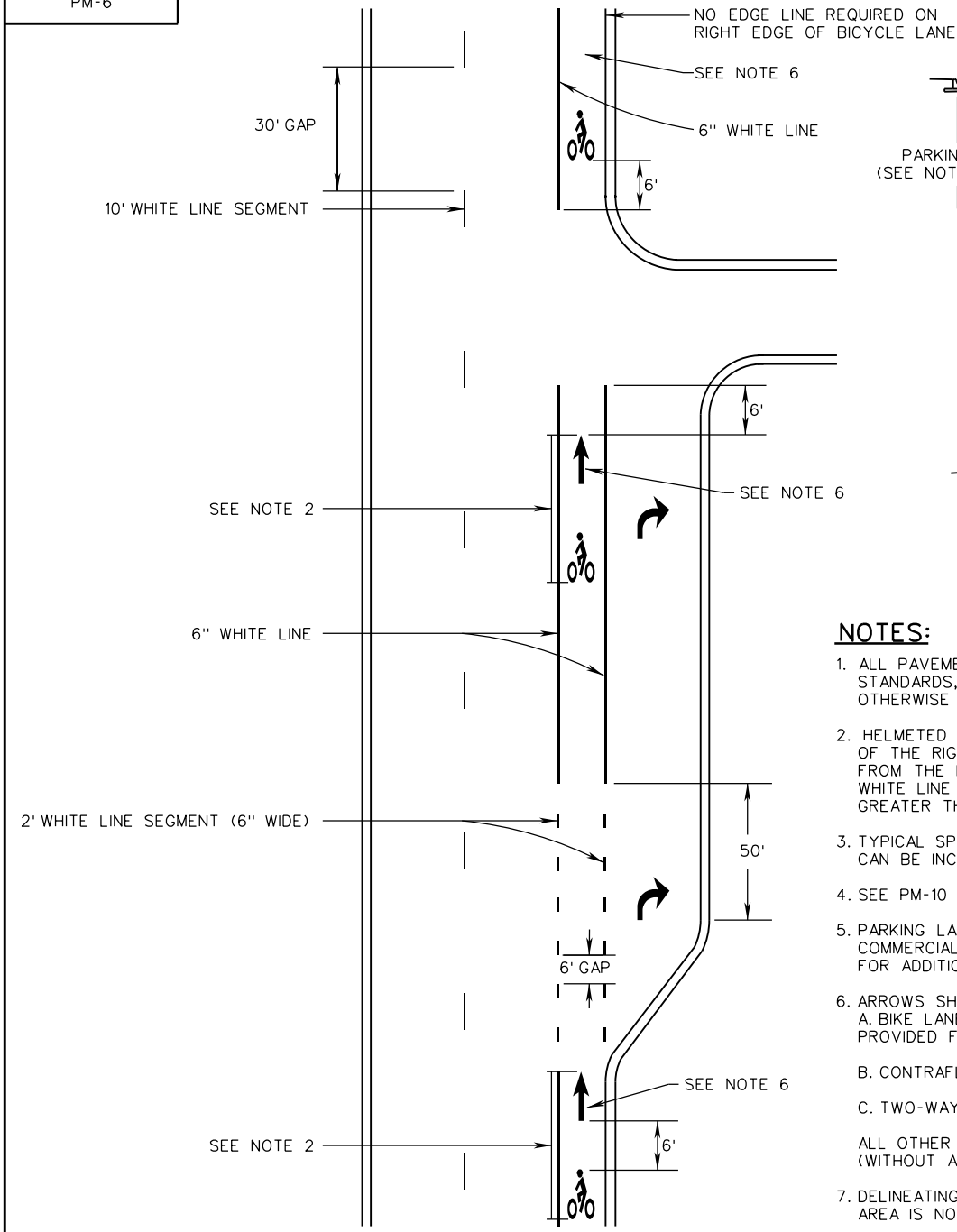

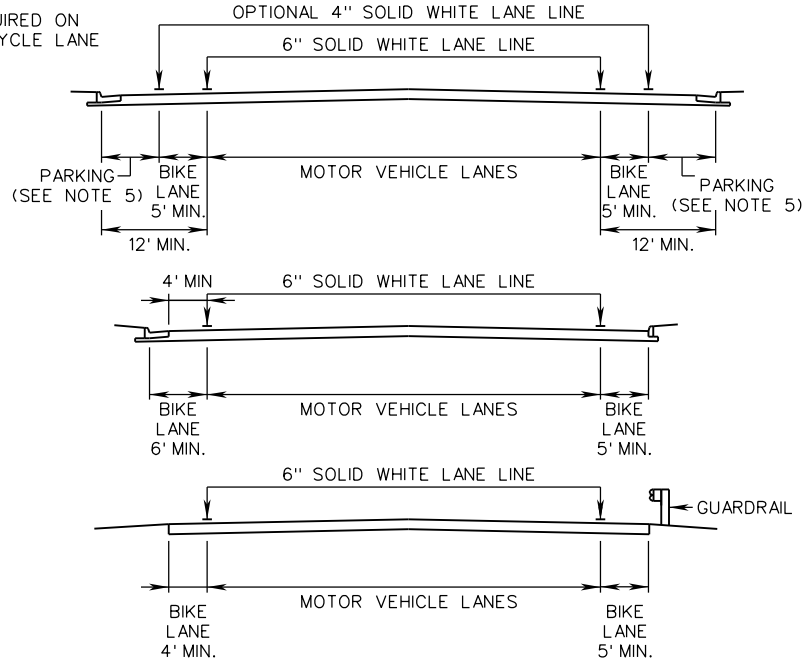

TYPICAL BIKE LANE CROSS SECTIONS

NOTES:

1. ALL PAVEMENT MARKINGS SHALL BE INSTALLED IN ACCORDANCE WITH THESE STANDARDS, THE MUTCD, AND THE VIRGINIA SUPPLEMENT TO THE MUTCD, UNLESS OTHERWISE SPECIFIED IN THE CONTRACT DOCUMENTS.

2. HELMETED BICYCLIST SYMBOL SHALL BE PLACED JUST PRIOR TO THE BEGINNING OF THE RIGHT TURN LANE TAPER AS SHOWN. THEY SHALL ALSO BE PLACED 6' FROM THE END OF THE SOLID WHITE LINE AT RIGHT TURN LANES IF THE SOLID WHITE LINE SEPARATING THE BICYCLE LANE FROM THE RIGHT TURN LANE IS GREATER THAN 100' IN LENGTH.

3. TYPICAL SPACING BETWEEN BICYCLE LANE SYMBOLS SHALL BE 500 FT. SPACING CAN BE INCREASED OR DECREASED AS DIRECTED BY THE ENGINEER.

4. SEE PM-10 FOR HELMETED BICYCLIST SYMBOL AND ARROW DETAILS.

5. PARKING LANE WIDTH SHALL BE 7' FOR RESIDENTIAL STREETS AND 8' FOR COMMERCIAL AND MIXED-USE STREETS. REFER TO THE VDOT ROAD DESIGN MANUAL FOR ADDITIONAL REQUIREMENTS.

6. ARROWS SHALL BE USED FOR:
   A. BIKE LANES ON UNDIVIDED TWO-WAY STREETS WHERE A BIKE LANE IS ONLY PROVIDED FOR ONE DIRECTION OF TRAVEL, OR

   B. CONTRAFLOW BIKE LANES, OR

   C. TWO-WAY CYCLE TRACKS

   ALL OTHER BIKE LANES SHALL JUST USE THE HELMETED CYCLIST SYMBOL (WITHOUT ARROW)

7. DELINEATING BICYCLE LANES WITH THE LIMITS OF A REQUIRED PAVED SHOULDER AREA IS NOT PERMITED.

VDOT ROAD AND BRIDGE STANDARDS	A COPY OF THE ORIGINAL SEALED AND SIGNED DRAWING IS ON FILE IN THE CENTRAL OFFICE.		SPECIFICATION REFERENCE
SHEET 1 OF 2	TYPICAL PAVEMENT MARKING	REVISION DATE 04/19	704
1330.60	BICYCLE LANE		
	VIRGINIA DEPARTMENT OF TRANSPORTATION		

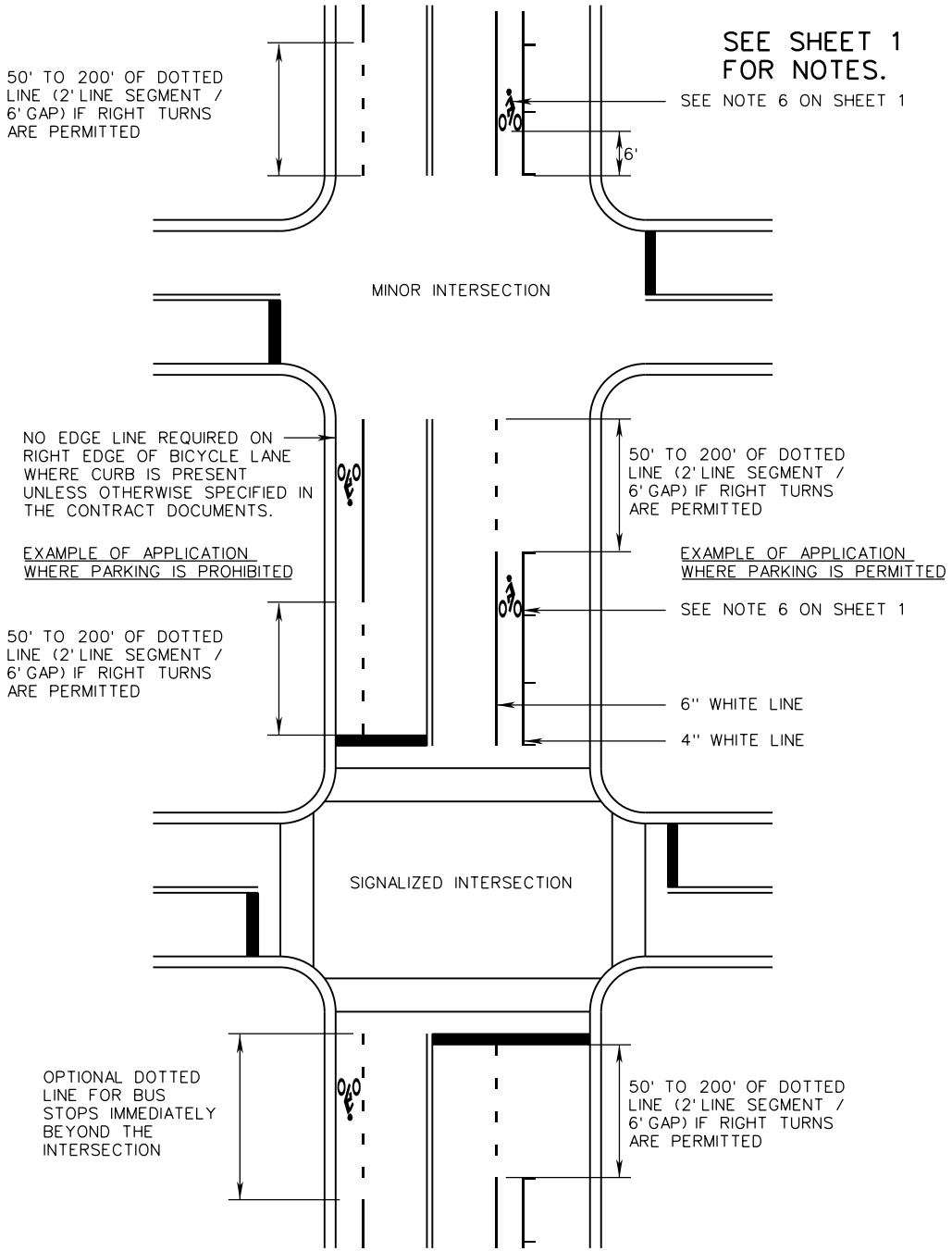

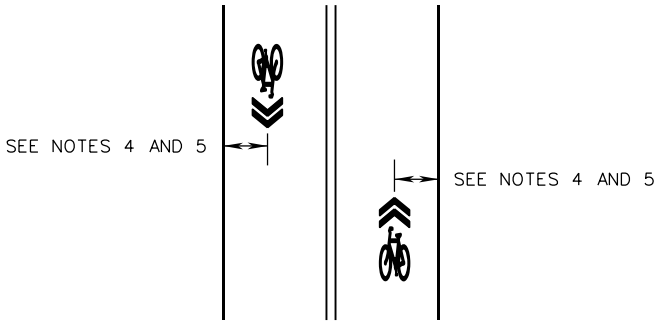

MARKED SHARED LANE

NOTES:

1. ALL PAVEMENT MARKINGS SHALL BE INSTALLED IN ACCORDANCE WITH THESE STANDARDS, THE MUTCD, AND THE VIRGINIA SUPPLEMENT TO THE MUTCD, UNLESS OTHERWISE SPECIFIED IN THE CONTRACT DOCUMENTS.
2. SHARED LANE MARKINGS SHALL NOT BE USED IN PAVED SHOULDERS, IN BICYCLE LANES, OR ON ROADWAYS THAT HAVE A SPEED LIMIT ABOVE 35 MPH.
3. SHARED LANE MARKINGS SHALL BE PLACED IMMEDIATELY AFTER AN INTERSECTION AND SPACED AT INTERVALS NOT GREATER THAN 1000 FEET.
4. IN SHARED LANES WITH ON-STREET PARALLEL PARKING, THE CENTER OF THE SHARED LANE MARKINGS SHALL BE AT LEAST 11' FROM THE FACE OF CURB, OR FROM THE EDGE OF PAVEMENT WHERE THERE IS NO CURB.
5. ON STREETS WITHOUT ON-STREET PARKING AND AN OUTSIDE TRAVEL LANE LESS THAN 14' WIDE, THE CENTER OF THE SHARED LANE MARKINGS SHALL BE AT LEAST 4' FROM THE FACE OF CURB, OR FROM THE EDGE OF PAVEMENT WHERE THERE IS NO CURB.
6. SEE PM-10 FOR SHARED LANE MARKING SYMBOL DETAILS.

SPECIFICATION REFERENCE	A COPY OF THE ORIGINAL SEALED AND SIGNED DRAWING IS ON FILE IN THE CENTRAL OFFICE.	VDOT ROAD AND BRIDGE STANDARDS	
704	TYPICAL PAVEMENT MARKING BICYCLE LANE AND MARKED SHARED LANE VIRGINIA DEPARTMENT OF TRANSPORTATION	REVISION DATE 04/19	SHEET 2 OF 2 1330.61

STANDARD

THIS PAGE INTENTIONALLY LEFT BLANK

VDOT
ROAD AND BRIDGE STANDARDS

SHEET 1 OF 1

REVISION DATE

TITLE

VIRGINIA DEPARTMENT OF TRANSPORTATION

SPECIFICATION REFERENCE

IN AN EFFORT TO SIMPLIFY THE FIGURE TO SHOW WARNING SIGN AND PAVEMENT MARKING PLACEMENT, NOT ALL REQUIRED TRAFFIC CONTROL DEVICES ARE SHOWN.

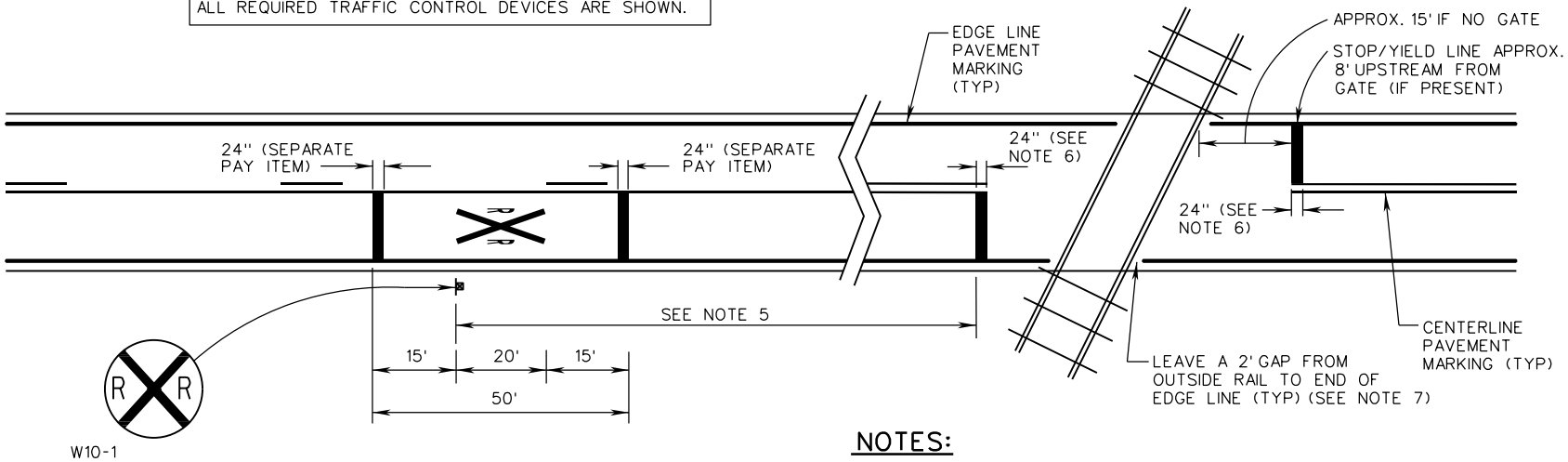

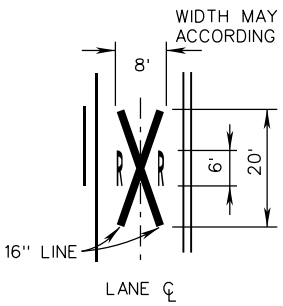

A PORTION OF THE PAVEMENT MARKING SYMBOL SHOULD BE DIRECTLY OPPOSITE THE ADVANCE WARNING SIGN (W10-1). IF NEEDED, SUPPLEMENTAL PAVEMENT MARKING SYMBOLS MAY BE PLACED BETWEEN THE ADVANCE WARNING SIGN AND THE CROSSING, BUT SHOULD BE AT LEAST 50' FROM THE STOP OR YIELD LINE.

NOTES:

1. ALL PAVEMENT MARKINGS SHALL BE INSTALLED IN ACCORDANCE WITH THESE STANDARDS, THE MUTCD, AND THE VIRGINIA SUPPLEMENT TO THE MUTCD, UNLESS OTHERWISE SPECIFIED IN THE CONTRACT DOCUMENTS.
2. ON MULTI-LANE ROADS THE TRANSVERSE BANDS SHALL EXTEND ACROSS ALL APPROACH LANES, AND INDIVIDUAL RAILROAD CROSSING (RXR) SYMBOLS SHALL BE USED IN EACH APPROACH LANE.
3. SEE PM-10 FOR RAILROAD CROSSING (RXR) SYMBOLS DETAILS.
4. REFER TO THE MUTCD FOR SIGNING REQUIREMENTS AT PASSIVE GRADE CROSSINGS (NO AUTOMATED TRAFFIC CONTROL DEVICES).
5. THE PLACEMENT OF THE GRADE CROSSING ADVANCE WARNING (W10-1) SIGN SHALL BE IN ACCORDANCE WITH SECTION 2C.05 AND TABLE 2C-4 (CONDITION B) OF THE MUTCD.
6. YIELD LINES MAY BE USED INSTEAD OF STOP LINES AT PASSIVE GRADE CROSSINGS WITH YIELD SIGNS INSTALLED.
7. ALL EDGE LINES SHALL EXTEND WITHIN TWO FEET OF THE OUTSIDE RAIL, EXCEPT LINES SHALL TERMINATE AT THE STOP OR YIELD LINE IF THE CROSSING IS SIGNED WITH A W10-5 HUMPED XING SIGN.
8. EXTEND RXR SYMBOL MARKINGS 6 INCHES FROM THE EDGE OF PAVEMENT TO 8 INCHES FROM THE CENTER LINE OF THE ROADWAY OR POSTION THE MARKINGS TO ACCOMODATE FUTURE PLACEMENT OF CENTER AND EDGE LINE PAVEMENT MARKINGS WHERE THESE MARKINGS DO NOT EXIST.

SPECIFICATION REFERENCE	A COPY OF THE ORIGINAL SEALED AND SIGNED DRAWING IS ON FILE IN THE CENTRAL OFFICE.	VDOT ROAD AND BRIDGE STANDARDS	
704	TYPICAL PAVEMENT MARKING RAILROAD - HIGHWAY GRADE CROSSING VIRGINIA DEPARTMENT OF TRANSPORTATION	REVISION DATE 04/19	SHEET 1 OF 1 1330.70

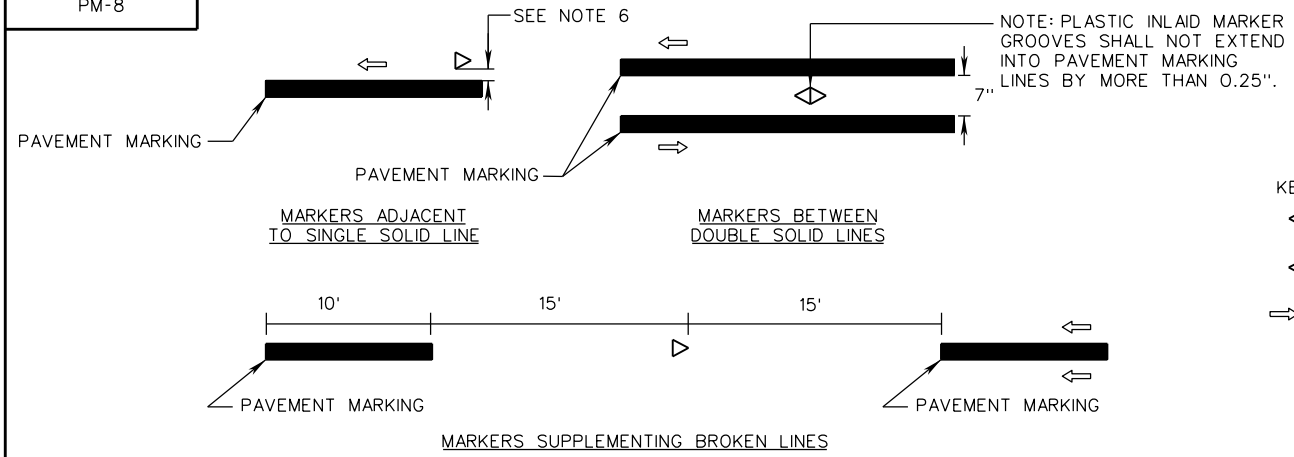

KEY:

- TWO WAY PAVEMENT MARKER, WITH POINTS INDICATING RETROREFLECTIVE FACE
- ONE WAY PAVEMENT MARKER, WITH POINT INDICATING RETROREFLECTIVE FACE
- INDICATES DIRECTION OF TRAVEL

GENERAL PLACEMENT

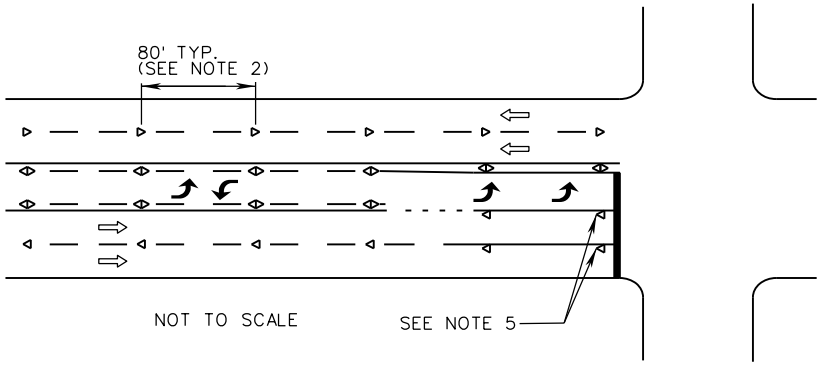

NOTES:

1. EXACT LOCATIONS OF THE MARKERS SHALL BE APPROVED BY THE ENGINEER PRIOR TO INSTALLATION.
2. TYPICAL SPACING SHALL BE 80' C-C. 40' C-C SPACING SHALL BE USED ON HORIZONTAL CURVES WITH A CURVE ADVISORY SPEED AT LEAST 10 MPH BELOW THE POSTED OR STATUTORY SPEED LIMIT, UNLESS OTHERWISE SHOWN IN THE CONTRACT DOCUMENTS OR AS DIRECTED BY THE ENGINEER. SEE SHEET 2 FOR SPECIFIC TYPICALS.
3. PAVEMENT MARKERS SHALL BE THE SAME COLOR AS THE ADJACENT PAVEMENT MARKING. THE COLOR OF THE BACKSIDE OF PAVEMENT MARKERS SHALL BE AS SHOWN IN THE TABLE BELOW.
4. INLAID PAVEMENT MARKERS SHALL BE OMITTED ON BRIDGE DECKS UNLESS OTHERWISE NOTED IN THE CONTRACT DOCUMENTS.
5. INLAID PAVEMENT MARKER GROOVES SHALL NOT ENCROACH INTO OR BEYOND THE STOP LINE.
6. PLASTIC INLAID MARKER GROOVES SHALL BE 1"- 2" FROM MARKING EDGE WHEN PLACED ADJACENT TO SINGLE SOLID LINE.

TWO-WAY LEFT TURN LANE AND CENTER LANE LEFT TURN

PAVEMENT MARKER COLOR

MARKER TYPE		BACKSIDE COLOR
ONE WAY TRAFFIC	WHITE INLAID	RED
	TEMPORARY	BLANK
	YELLOW INLAID	BLANK
TWO WAY TRAFFIC	ALL TYPES	MATCH ADJACENT PAVEMENT MARKING

A COPY OF THE ORIGINAL SEALED AND SIGNED DRAWING IS ON FILE IN THE CENTRAL OFFICE.

TYPICAL PAVEMENT MARKER

LOCATION DETAILS

VIRGINIA DEPARTMENT OF TRANSPORTATION

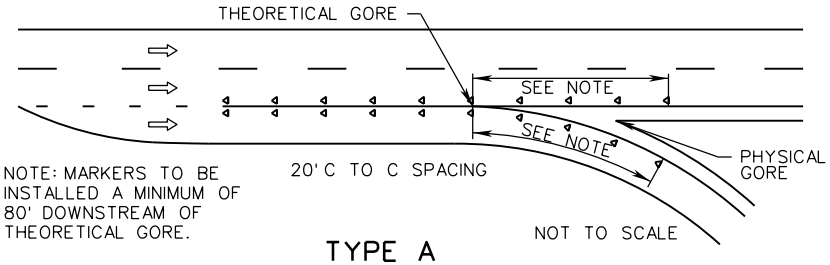

TYPE A

EXIT RAMP

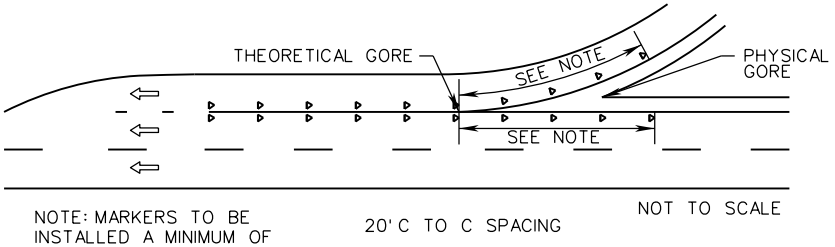

TYPE B

ENTRANCE RAMP

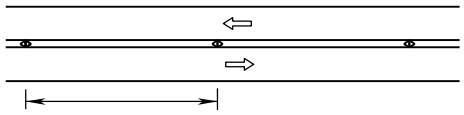

80' C-C ON TANGENTS
40' C-C WHERE ADVISORY CURVE SPEED IS AT LEAST 10 MPH BELOW THE SPEED LIMIT

TYPE C

TWO OR MULTI-LANE UNDIVIDED HIGHWAY

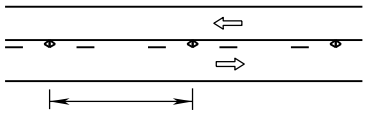

80' C-C ON TANGENTS
40' C-C WHERE ADVISORY CURVE SPEED IS AT LEAST 10 MPH BELOW THE SPEED LIMIT

TYPE D

ONE-WAY OR TWO-WAY PASSING ZONES

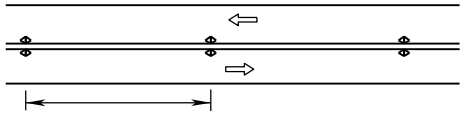

80' C-C ON TANGENTS
40' C-C WHERE ADVISORY CURVE SPEED IS AT LEAST 10 MPH BELOW THE SPEED LIMIT

NOTE: SHALL ONLY BE USED ON EXISTING PAVEMENT WHEN DIRECTED BY CONTRACT DOCUMENTS.

TYPE E

TWO OR MULTI-LANE UNDIVIDED HIGHWAY

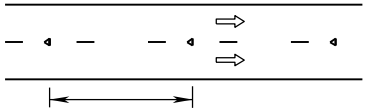

80' C-C ON TANGENTS
40' C-C WHERE ADVISORY CURVE SPEED IS AT LEAST 10 MPH BELOW THE SPEED LIMIT

TYPE F

MULTI-LANE HIGHWAY TANGENT

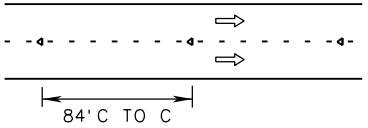

TYPE G

MULTI-LANE HIGHWAY LANE DROP OR AUXILIARY LANE

KEY:

- TWO WAY PAVEMENT MARKER, WITH POINTS INDICATING RETROREFLECTIVE FACE
- ONE WAY PAVEMENT MARKER, WITH POINT INDICATING WHITE RETROREFLECTIVE FACE. BACK SIDE RETROREFLECTIVE FACE SHALL BE RED
- INDICATES DIRECTION OF TRAVEL

SPECIFICATION REFERENCE	A COPY OF THE ORIGINAL SEALED AND SIGNED DRAWING IS ON FILE IN THE CENTRAL OFFICE.	VDOT ROAD AND BRIDGE STANDARDS	
704	TYPICAL PAVEMENT MARKER LOCATION DETAILS VIRGINIA DEPARTMENT OF TRANSPORTATION	REVISION DATE 10/19	SHEET 2 OF 3 1330.81

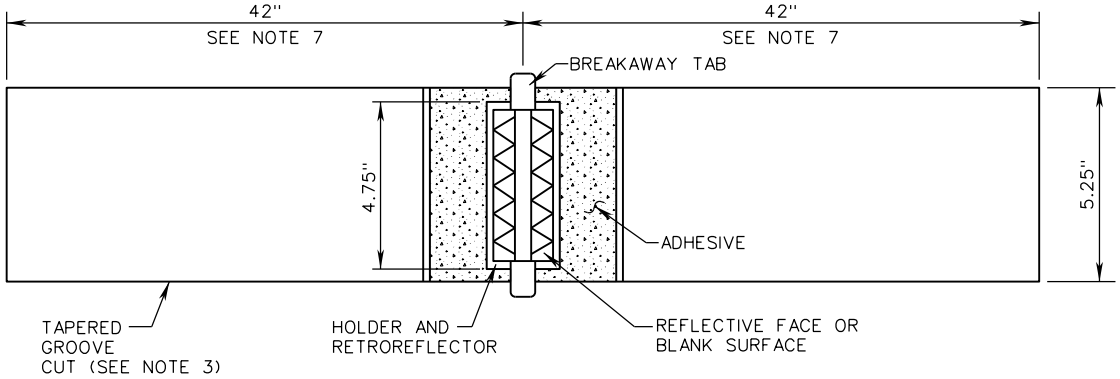

PLAN VIEW - TANGENT SECTIONS

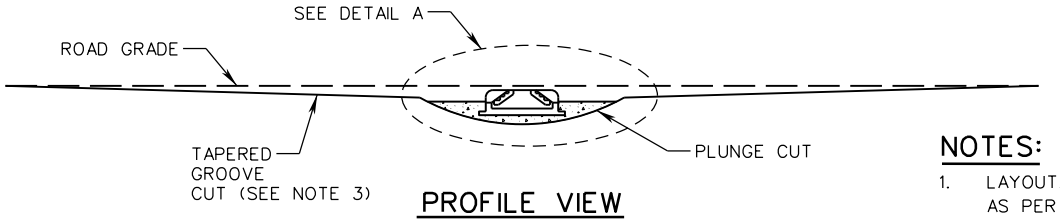

PROFILE VIEW

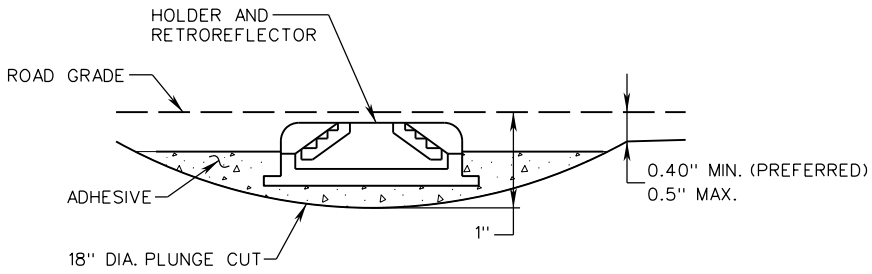

DETAIL A

NOTES:

1. LAYOUT, SPACING, AND COLOR OF INLAID PAVEMENT MARKERS SHALL BE AS PER SHEETS 1 AND 2 OF 3.
2. ALL GROOVE EDGES SHALL BE AT LEAST 2 INCHES FROM ANY SEAM OR PAVEMENT JOINT.
3. GROOVE CUTS MAY BE TAPERED OR BEVELED. TAPERED CUTS SHALL START AT ROAD LEVEL ON EACH END AND TAPER AT A FIXED RATE AS SHOWN ON THE PROFILE VIEW. BEVELED GROOVE CUTS SHALL BE 0.5" MAXIMUM DEPTH (0.4" PREFERRED), AND SHALL BE 0.4" MINIMUM DEPTH AT BOTH ENDS OF THE PLUNGE CUT.
4. GROOVE AND PLUNGE CUT SHALL BE CLEAN AND DRY PRIOR TO PLACEMENT OF ADHESIVE.
5. THE EPOXY ADHESIVE SHALL BE THOROUGHLY MIXED UNTIL IT IS UNIFORM IN COLOR, AND APPLIED IN ACCORDANCE WITH THE MANUFACTURER'S INSTALLATION INSTRUCTIONS.
6. MARKER SHALL BE INSTALLED AS PER MANUFACTURER'S INSTALLATION INSTRUCTIONS WITH THE BREAKAWAY TABS RESTING ON THE PAVEMENT SURFACE. THE EPOXY SHALL BE FILLED TO THE LEVEL OF THE TOP OF THE MARKER HOLDER. EPOXY SHALL NOT TOUCH THE RETROREFLECTOR.
7. TOTAL GROOVE LENGTH MAY BE SHORTENED TO 54" ON SHARP CURVES IF APPROVED BY THE ENGINEER.
8. GROOVES SHALL NOT OVERLAP WITH LOOP DETECTOR WIRES.

A COPY OF THE ORIGINAL SEALED AND SIGNED DRAWING IS ON FILE IN THE CENTRAL OFFICE.

INLAID PAVEMENT MARKER

DETAILS

VIRGINIA DEPARTMENT OF TRANSPORTATION

STANDARD

THIS PAGE INTENTIONALLY LEFT BLANK

SPECIFICATION REFERENCE	TITLE VIRGINIA DEPARTMENT OF TRANSPORTATION	VDOT ROAD AND BRIDGE STANDARDS REVISION DATE	SHEET 1 OF 1 ____._

PARALLEL SOLID LINE SPACING (NO PASSING ZONE)

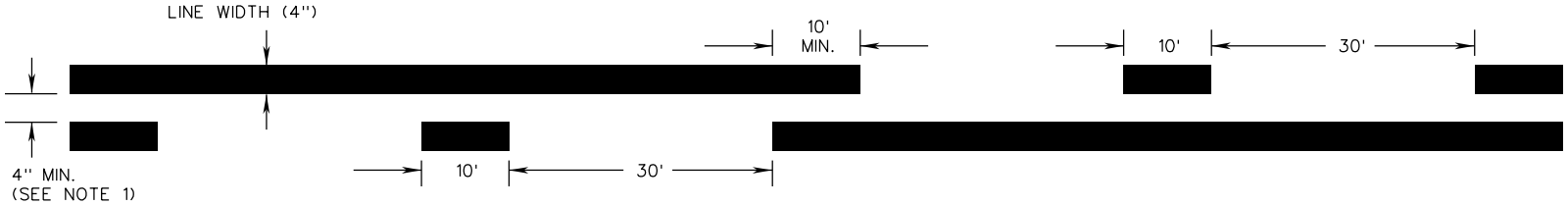

PARALLEL SOLID AND BROKEN LINES
(ONE-WAY PASSING ZONE)

NOTES:

1. THE SPACE BETWEEN TWO PARALLEL LINES SHALL BE 7" WIDE IF RAISED PAVEMENT MARKERS ARE PRESENT BETWEEN THE TWO PARALLEL LINES.

VDOT ROAD AND BRIDGE STANDARDS		A COPY OF THE ORIGINAL SEALED AND SIGNED DRAWING IS ON FILE IN THE CENTRAL OFFICE. PAVEMENT MARKING LOCATION DETAILS VIRGINIA DEPARTMENT OF TRANSPORTATION	SPECIFICATION REFERENCE
SHEET 1 OF 1	REVISION DATE		704
1330.90	10/19		

PM-10

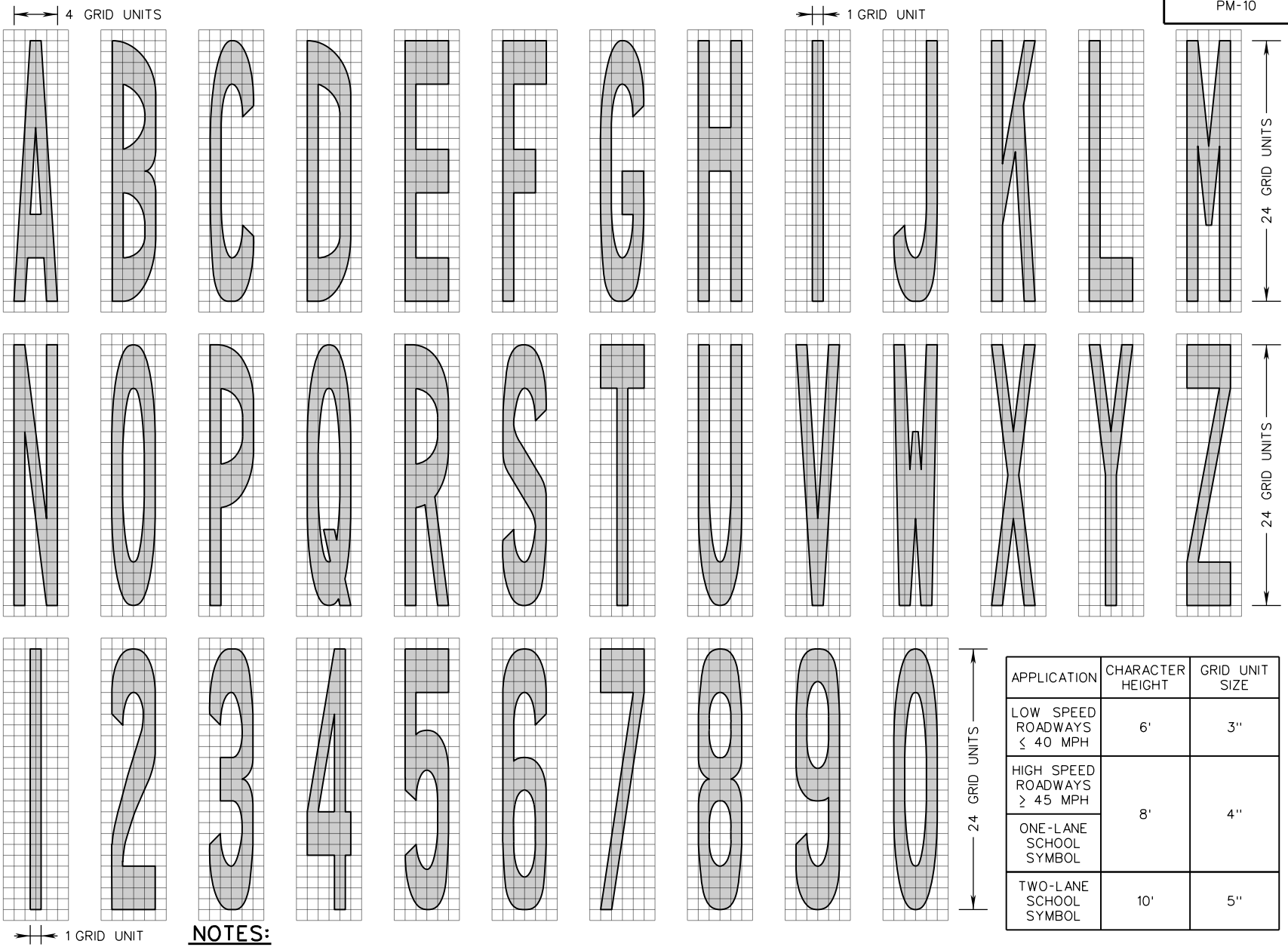

APPLICATION	CHARACTER HEIGHT	GRID UNIT SIZE
LOW SPEED ROADWAYS ≤ 40 MPH	6'	3"
HIGH SPEED ROADWAYS ≥ 45 MPH	8'	4"
ONE-LANE SCHOOL SYMBOL		
TWO-LANE SCHOOL SYMBOL	10'	5"

NOTES:

1. STANDARD CHARACTERS ARE 24 GRID UNITS HIGH AND 4 GRID UNITS WIDE (EXCEPT LETTER "I" AND THE NUMBER "1" WHICH ARE 1 GRID UNIT WIDE).
2. VERTICAL STROKES ARE 1 UNIT WIDE, HORIZONTAL STROKES ARE 4 UNITS HIGH.
3. SPACE 1 GRID UNIT MINIMUM BETWEEN CHARACTERS OR AS OTHERWISE SHOWN (OPTICAL SPACING MAY BE USED).

SPECIFICATION REFERENCE

704

A COPY OF THE ORIGINAL SEALED AND SIGNED DRAWING IS ON FILE IN THE CENTRAL OFFICE.

PAVEMENT WORD, SYMBOL, AND ARROW MARKINGS

LETTERS AND NUMERALS DETAILS

VIRGINIA DEPARTMENT OF TRANSPORTATION

VDOT

ROAD AND BRIDGE STANDARDS

REVISION DATE NEW 01/15

SHEET 1 OF 15

1340.10

PM-10

SQUARE FOOT AREAS OF PAVEMENT WORD MARKINGS

LEGEND	PAINT APPLICATION 6' HIGH	PAINT APPLICATION 8' HIGH	ERADICATION 6' HIGH	ERADICATION 8' HIGH
AHEAD	17.5	30.5	42.0	75.0
AREA	14.0	24.5	33.0	59.0
BIKE	13.0	23.0	28.5	51.0
BUMP	15.0	26.5	33.0	59.0
EAST	13.0	22.5	33.0	59.0
ENDS	15.0	27.0	33.0	59.0
FT	5.0	9.0	15.0	27.0
HUMP	14.5	25.5	33.0	59.0
LANE	13.5	23.5	33.0	59.0
LEFT	11.0	20.0	33.0	59.0
MERGE	19.0	34.0	42.0	75.0
MPH	11.0	19.5	24.0	43.0
NO	8.0	13.5	15.0	27.0
NORTH	17.5	30.5	42.0	75.0

SQUARE FOOT AREAS OF PAVEMENT WORD MARKINGS

LEGEND	PAINT APPLICATION 6' HIGH	PAINT APPLICATION 8' HIGH	ERADICATION 6' HIGH	ERADICATION 8' HIGH
ONLY	12.0	21.5	30.5	53.5
PED	11.0	19.0	24.0	43.0
RIGHT	14.5	26.0	37.5	67.0
SCHOOL	(SEE NOTES 1 AND 2)	34.5 (ONE LANE)	(SEE NOTES 1 AND 2)	91.0 (ONE LANE)
SIGNAL	15.5	28.0	46.5	83.0
SLOW	13.5	24.0	33.0	59.0
SOUTH	16.5	29.0	42.0	75.0
STOP	12.5	22.5	33.0	59.0
TO	6.0	10.5	15.0	27.0
TURN	13.5	24.0	33.0	59.0
US	7.0	12.5	15.0	27.0
WEST	14.0	24.5	33.0	59.0
XING	12.0	21.0	28.5	51.0
YIELD	13.5	24.0	37.5	67.0

NOTES:

1. ONE-LANE APPLICATION OF "SCHOOL" SYMBOL IS 8' HIGH. WHEN INSTALLED IN A SINGLE LANE WITH A WIDTH LESS THAN 10.5', THE LETTERS SHALL BE SEPARATED BY THREE INCHES. WHEN INSTALLED IN A SINGLE LANE WITH A WIDTH GREATER THAN 10.5', THE LETTERS SHALL BE SEPARATED BY FOUR INCHES.
2. TWO-LANE APPLICATION OF "SCHOOL" SYMBOL IS 10' HIGH WITH PAINT APPLICATION AREA OF 53.5 SQ.FT. AND ERADICATION AREA OF 193.0 SQ.FT.
3. NON-LINEAR ERADICATION AREA IS BASED ON A "THEORETICAL BOX" DEFINED BY THE OUTERMOST LIMITS OF THE NON-LINEAR PAVEMENT MARKING THAT INCLUDES BOTH THE PAINTED AND NON-PAINTED AREAS THAT ENCOMPASS THE TOTAL WORD MESSAGE OR SYMBOL. SEE EXAMPLE.
4. ON UNDIVIDED ROADWAYS, SYMBOL AND MESSAGE PAVEMENT MARKINGS SHALL NOT EXTEND BEYOND THE CENTERLINE INTO OPPOSING TRAVEL LANES.

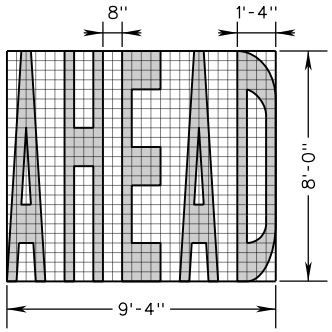

ERADICATION AREA = 8'-0" x 9'-4" ≈ 74.7 SQ.FT.

THEORETICAL BOX ERADICATION AREA EXAMPLE (8' LETTERS)

VDOT
ROAD AND BRIDGE STANDARDS

SHEET 2 OF 15
1340.11

REVISION DATE
NEW 01/15

A COPY OF THE ORIGINAL SEALED AND SIGNED DRAWING IS ON FILE IN THE CENTRAL OFFICE.

PAVEMENT WORD, SYMBOL, AND ARROW MARKINGS

WORDS DETAILS

VIRGINIA DEPARTMENT OF TRANSPORTATION

SPECIFICATION REFERENCE
704

SQUARE FOOT AREAS OF SYMBOLS AND ARROWS

SYMBOL	DESCRIPTION	PAINT APPLICATION	ERADICATION
	THRU ARROW	12.0	32.0
OR	SINGLE TURN ARROW (LEFT OR RIGHT)	17.5	51.0
OR	DOUBLE TURN ARROW (LEFT/THROUGH OR RIGHT/THROUGH)	28.5	96.0
	TRIPLE TURN ARROW (LEFT/THROUGH/RIGHT)	37.5	127.5
	DOUBLE TURN ARROW ARROW (LEFT/RIGHT)	27.0	80.0
OR	LANE-REDUCTION ARROW (LEFT OR RIGHT)	44.0	99.0
	WRONG-WAY ARROW	24.0	133.5
	FISH-HOOK LANE-USE ARROW FOR ROUNDABOUTS (LEFT)	20.5	81.0
	FISH-HOOK LANE-USE ARROW FOR ROUNDABOUTS (LEFT/THROUGH)	31.0	114.5
	FISH-HOOK LANE-USE ARROW FOR ROUNDABOUTS (LEFT/THROUGH/RIGHT)	39.5	195.0
	FISH-HOOK LANE-USE ARROW FOR ROUNDABOUTS (THROUGH/RIGHT)	31.5	142.0
	OPTIONAL OVAL FOR FISH-HOOK LANE-USE ARROW FOR ROUNDABOUTS	3.5	4.5
	HOV DIAMOND SYMBOL (ASPHALT SURFACE)	11.5	39.0
	HOV DIAMOND CONTRAST SYMBOL (CONCRETE SURFACE)	35.5	70.0
	YIELD LINE TRIANGLE (1' x 1.5')	0.75 (EACH)	1.5 (EACH)
	YIELD LINE TRIANGLE (2' x 3')	3.0 (EACH)	6.0 (EACH)

SQUARE FOOT AREAS OF SYMBOLS AND ARROWS

SYMBOL	DESCRIPTION	PAINT APPLICATION	ERADICATION
	BICYCLIST THRU ARROW	5.0	12.0
OR	BICYCLIST TURN ARROW (LEFT OR RIGHT)	9.5	29.0
	HELMETED BICYCLIST SYMBOL	6.5	20.0
	SHARED LANE MARKING SYMBOL	10.0	31.5
	SMALL YIELD AHEAD TRIANGLE	26.0	78.0
	LARGE YIELD AHEAD TRIANGLE	37.0	120.0
	RAILROAD CROSSING SYMBOL	60.0	160.0
	INTERNATIONAL SYMBOL OF ACCESSIBILITY - SPECIAL SIZED	22.0	22.5

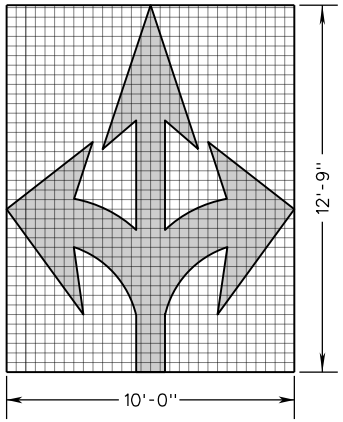

ERADICATION AREA = 12'-9" x 10'-0" ≈ 127.5 SQ.FT.

THEORETICAL BOX
ERADICATION AREA EXAMPLE (TRIPLE TURN ARROW)

SPECIFICATION REFERENCE	A COPY OF THE ORIGINAL SEALED AND SIGNED DRAWING IS ON FILE IN THE CENTRAL OFFICE.	VDOT ROAD AND BRIDGE STANDARDS
704	PAVEMENT WORD, SYMBOL, AND ARROW MARKINGS SQUARE FOOT AREAS OF SYMBOLS AND ARROWS VIRGINIA DEPARTMENT OF TRANSPORTATION	REVISION DATE 02/16 SHEET 3 OF 15 1340.12

PM-10

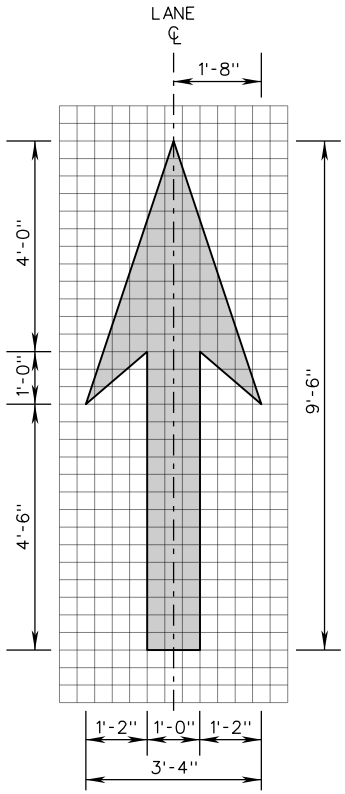

THRU ARROW

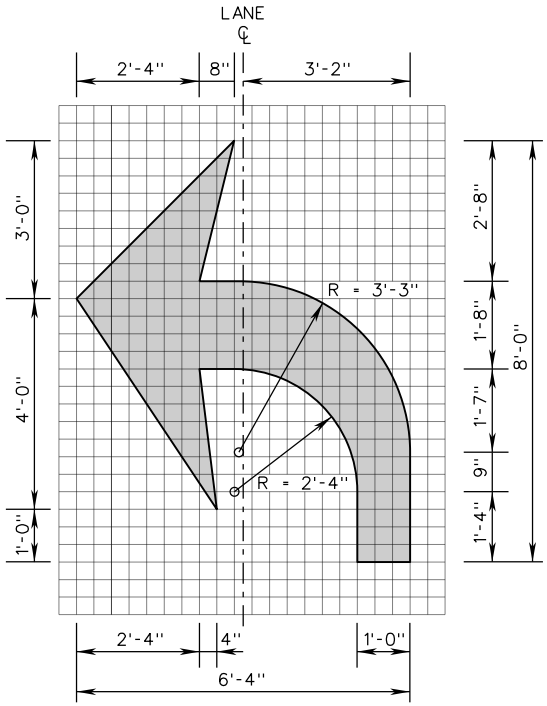

SINGLE TURN ARROW
(LEFT OR RIGHT)

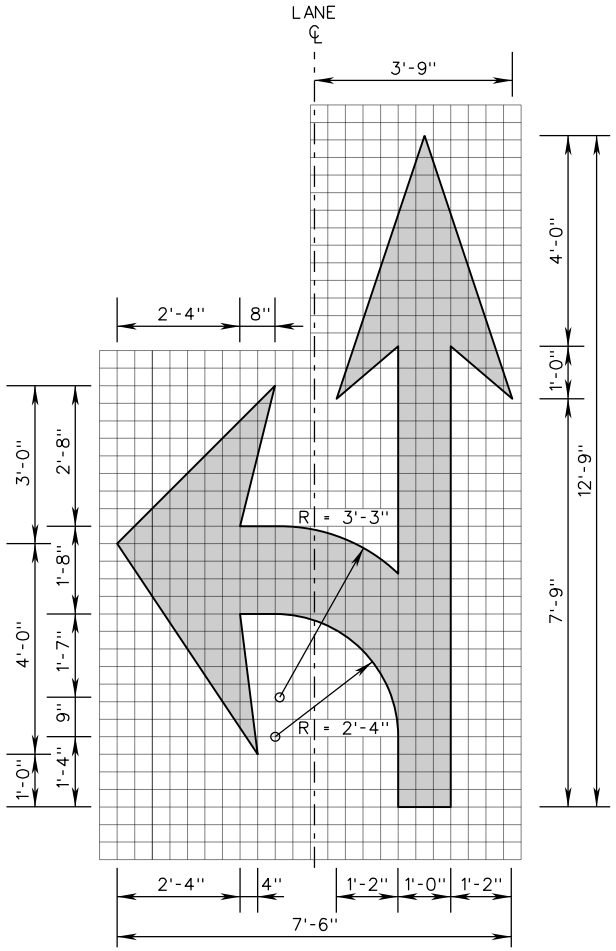

DOUBLE TURN ARROW
(LEFT/THRU OR
RIGHT/THRU)

NOTES:

1. 1 GRID UNIT = 4 INCHES
2. ALL SYMBOLS/LEGEND SHALL BE WHITE UNLESS OTHERWISE SPECIFIED IN THE CONTRACT DOCUMENTS.

VDOT ROAD AND BRIDGE STANDARDS	A COPY OF THE ORIGINAL SEALED AND SIGNED DRAWING IS ON FILE IN THE CENTRAL OFFICE.		SPECIFICATION REFERENCE
SHEET 4 OF 15	PAVEMENT WORD, SYMBOL, AND ARROW MARKINGS	REVISION DATE	
1340.13	ARROW DETAILS	NEW 01/15	704
	VIRGINIA DEPARTMENT OF TRANSPORTATION		

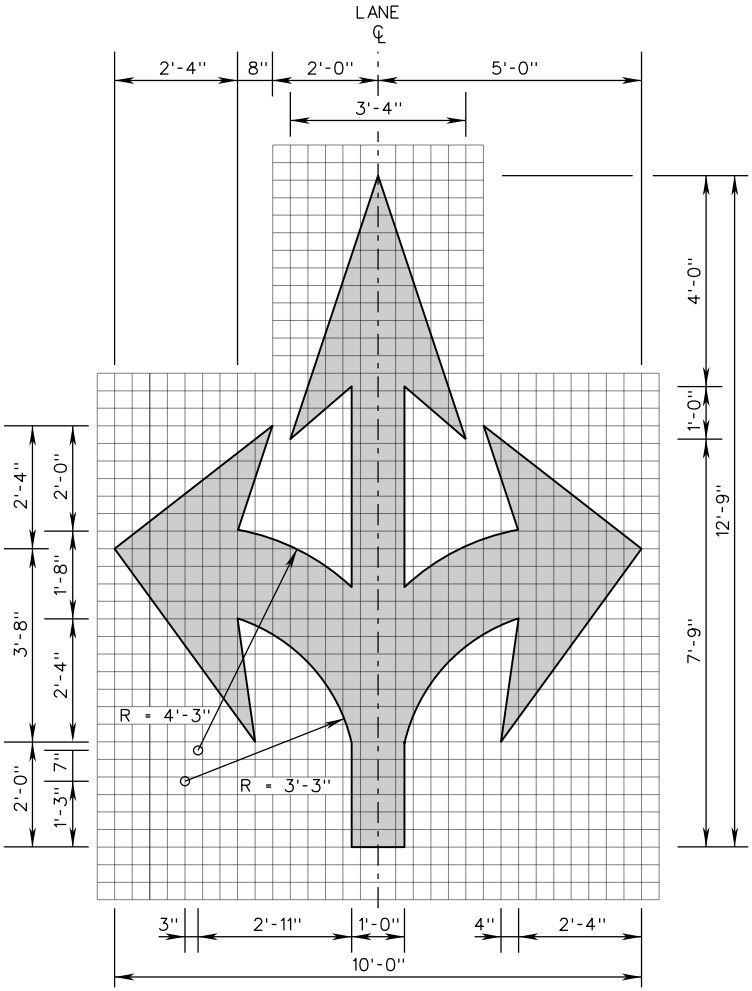

TURN TURN ARROW
(LEFT/THRU/RIGHT)

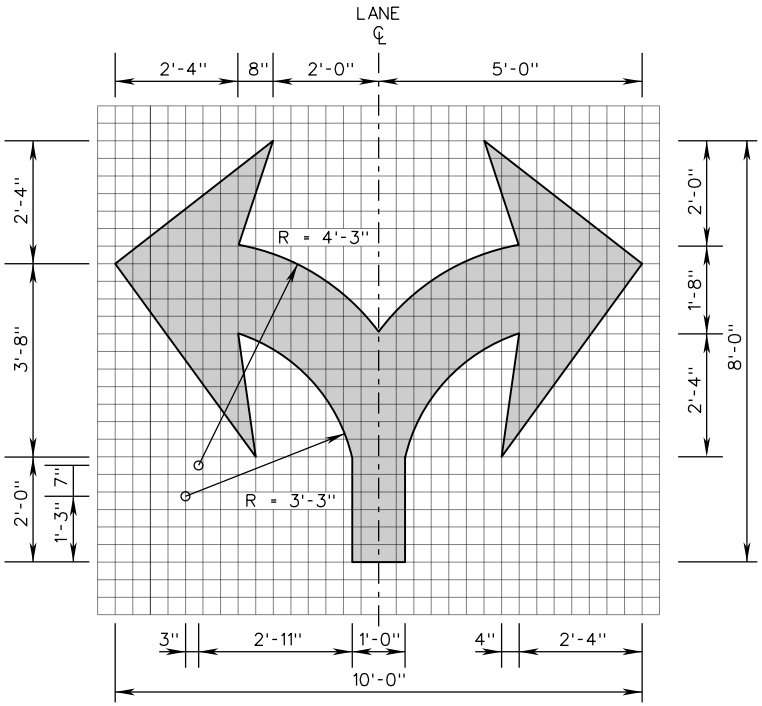

DOUBLE TURN ARROW
(LEFT/RIGHT)

NOTES:

1. 1 GRID UNIT = 4 INCHES
2. ALL SYMBOLS/LEGEND SHALL BE WHITE UNLESS OTHERWISE SPECIFIED IN THE CONTRACT DOCUMENTS.

SPECIFICATION REFERENCE	A COPY OF THE ORIGINAL SEALED AND SIGNED DRAWING IS ON FILE IN THE CENTRAL OFFICE.	VDOT ROAD AND BRIDGE STANDARDS
704	PAVEMENT WORD, SYMBOL, AND ARROW MARKINGS ARROW DETAILS VIRGINIA DEPARTMENT OF TRANSPORTATION	REVISION DATE NEW 01/15 SHEET 5 OF 15 1340.14

PM-10

NOTES:

1. 1 GRID UNIT = 6 INCHES
2. ALL SYMBOLS/LEGEND SHALL BE WHITE UNLESS OTHERWISE SPECIFIED IN THE CONTRACT DOCUMENTS.

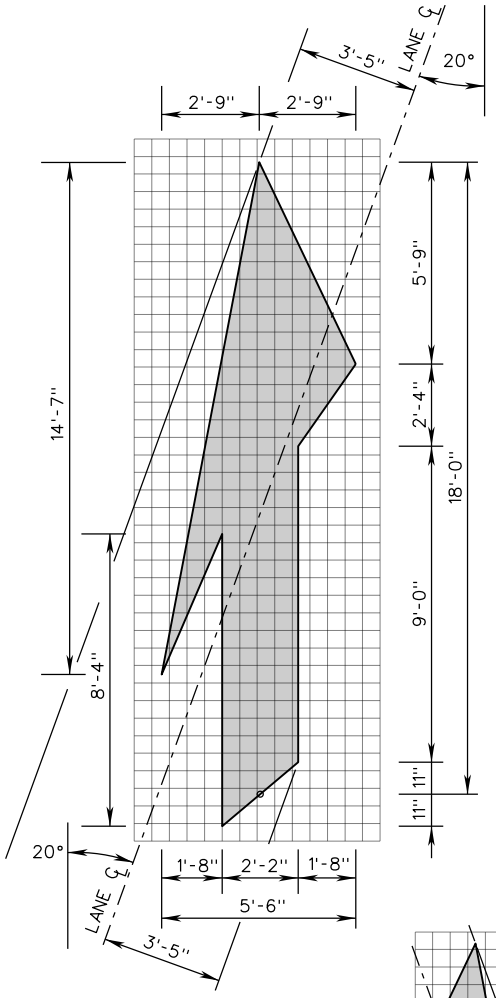

LANE REDUCTION ARROW (LEFT)

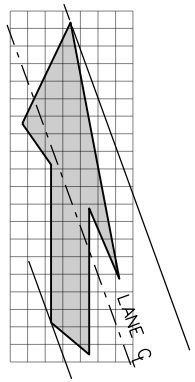

LANE REDUCTION ARROW (RIGHT)

SHOWN FOR CLARITY
1 GRID UNIT = 1 FOOT

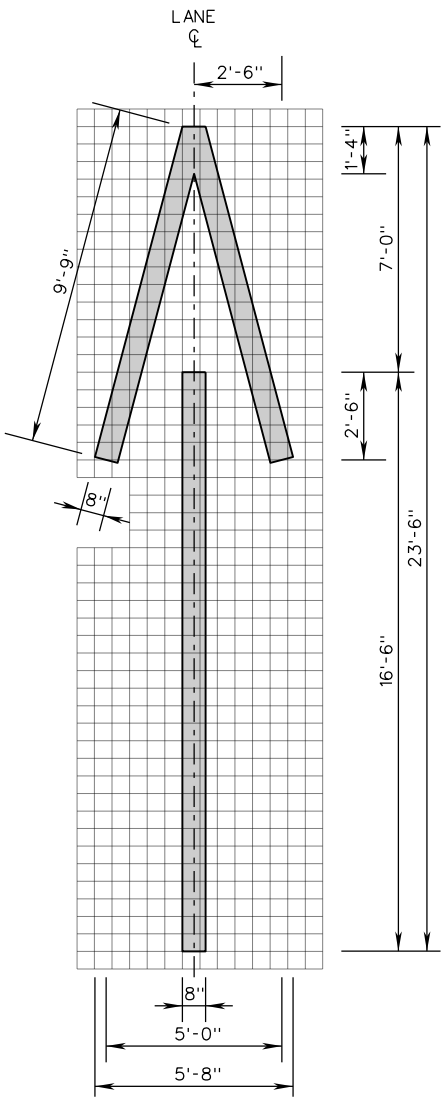

WRONG-WAY ARROW

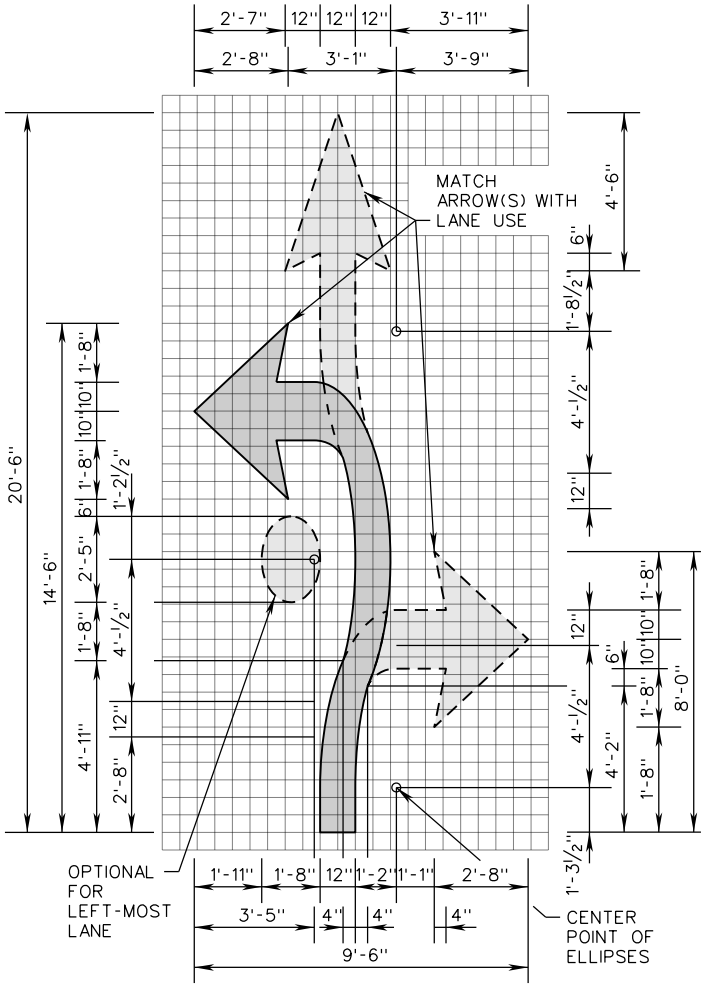

FISH-HOOK LANE-USE ARROW FOR ROUNDABOUTS

VDOT ROAD AND BRIDGE STANDARDS	A COPY OF THE ORIGINAL SEALED AND SIGNED DRAWING IS ON FILE IN THE CENTRAL OFFICE.	SPECIFICATION REFERENCE
SHEET 6 OF 15	PAVEMENT WORD, SYMBOL, AND ARROW MARKINGS	
1340.15	ARROW DETAILS	704
REVISION DATE 01/15	VIRGINIA DEPARTMENT OF TRANSPORTATION	

PM-10

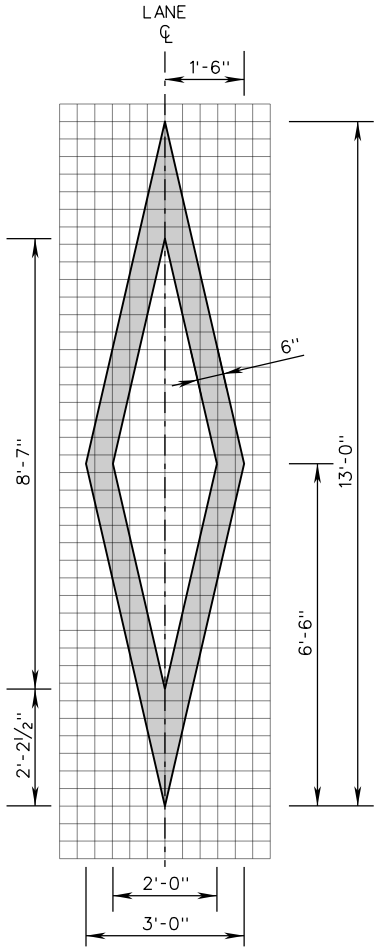

HOV DIAMOND SYMBOL
(ASPHALT SURFACE)

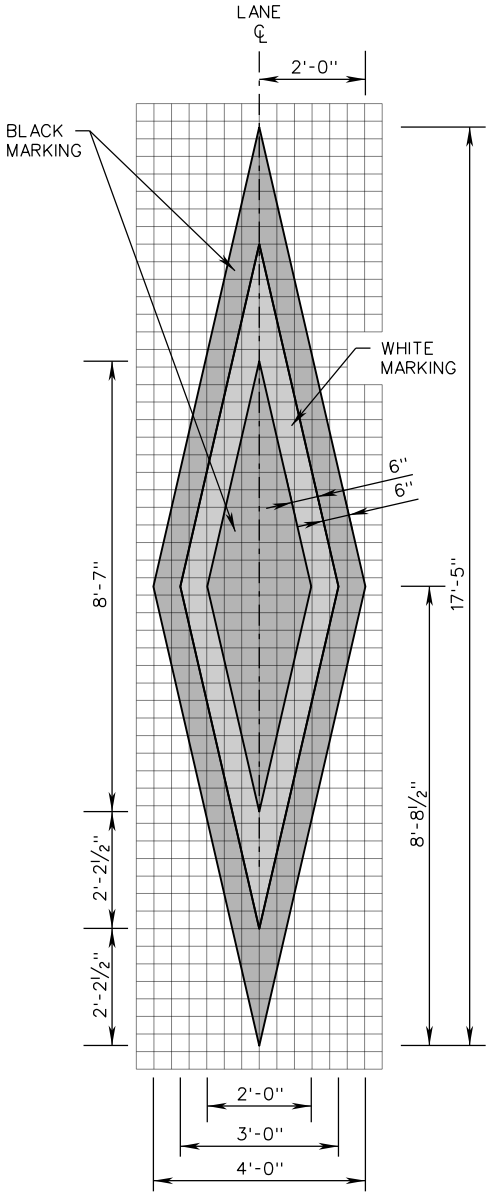

HOV DIAMOND
CONTRAST SYMBOL
(CONCRETE SURFACE)

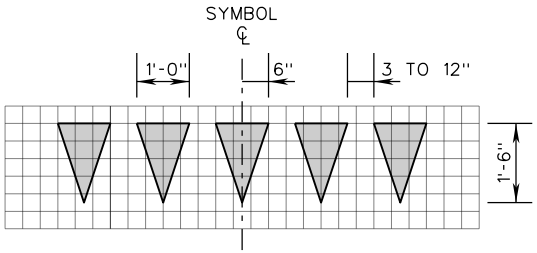

YIELD LINE TRIANGLE
(1' x 1.5' TRIANGLES)

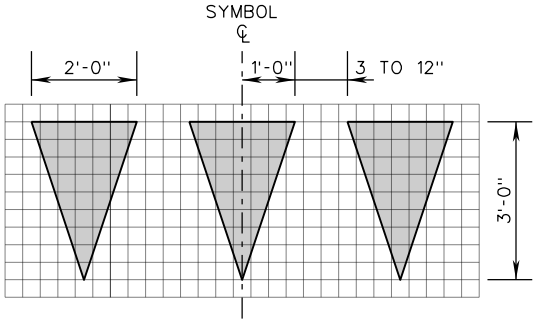

YIELD LINE TRIANGLE
(2' x 3' TRIANGLES)

NOTES:

1. 1 GRID UNIT = 4 INCHES
2. ALL SYMBOLS/LEGEND SHALL BE WHITE UNLESS OTHERWISE SPECIFIED IN THE CONTRACT DOCUMENTS.

SPECIFICATION REFERENCE	A COPY OF THE ORIGINAL SEALED AND SIGNED DRAWING IS ON FILE IN THE CENTRAL OFFICE.	VDOT ROAD AND BRIDGE STANDARDS
704	PAVEMENT WORD, SYMBOL, AND ARROW MARKINGS SYMBOL DETAILS VIRGINIA DEPARTMENT OF TRANSPORTATION	REVISION DATE 02/16 — SHEET 7 OF 15 — 1340.16

PM-10

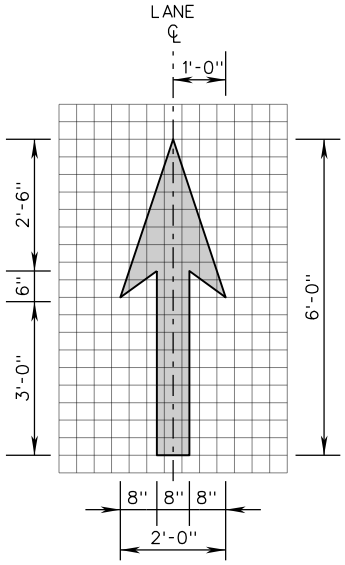

BICYCLIST THRU ARROW

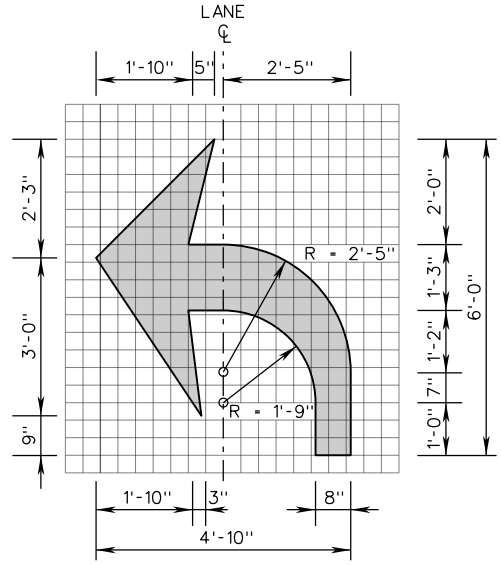

BICYCLIST THRU ARROW (LEFT OR RIGHT)

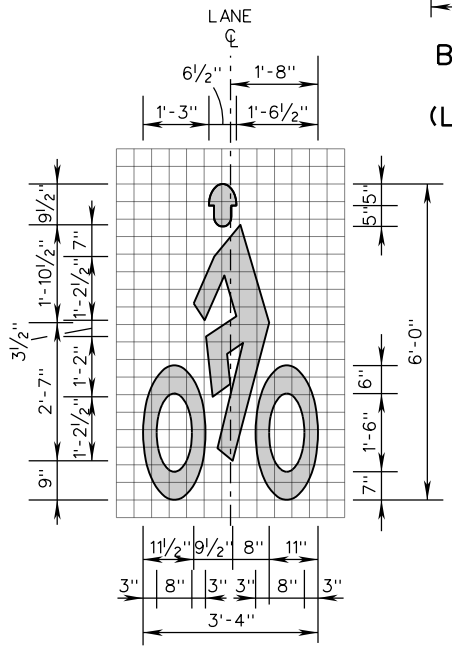

HELMETED BICYCLIST SYMBOL

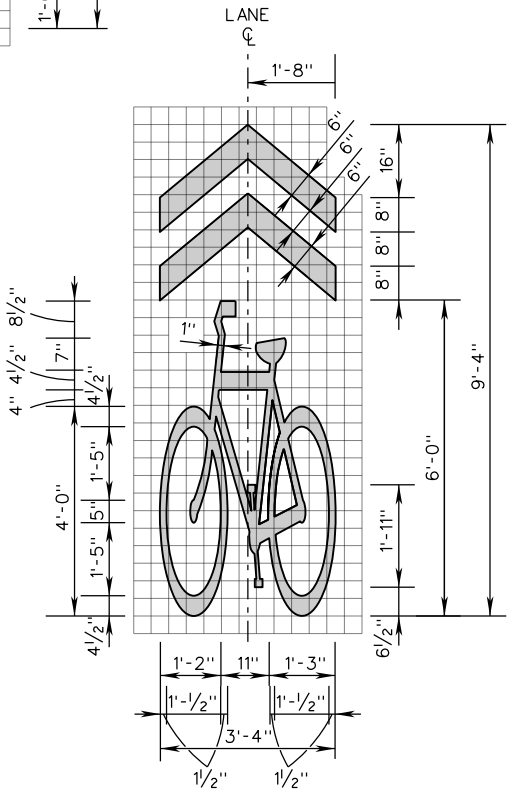

SHARED LANE MARKING SYMBOL

NOTES:

1. 1 GRID UNIT = 4 INCHES
2. ALL SYMBOLS/LEGEND SHALL BE WHITE UNLESS OTHERWISE SPECIFIED IN THE CONTRACT DOCUMENTS.

VDOT
ROAD AND BRIDGE STANDARDS

SHEET 8 OF 15
1340.17

REVISION DATE
NEW 01/15

A COPY OF THE ORIGINAL SEALED AND SIGNED DRAWING IS ON FILE IN THE CENTRAL OFFICE.

PAVEMENT WORD, SYMBOL, AND ARROW MARKINGS

SYMBOL DETAILS

VIRGINIA DEPARTMENT OF TRANSPORTATION

SPECIFICATION REFERENCE
704

NOTES:

1. 1 GRID UNIT = 6 INCHES
2. ALL SYMBOLS/LEGEND SHALL BE WHITE UNLESS OTHERWISE SPECIFIED IN THE CONTRACT DOCUMENTS.

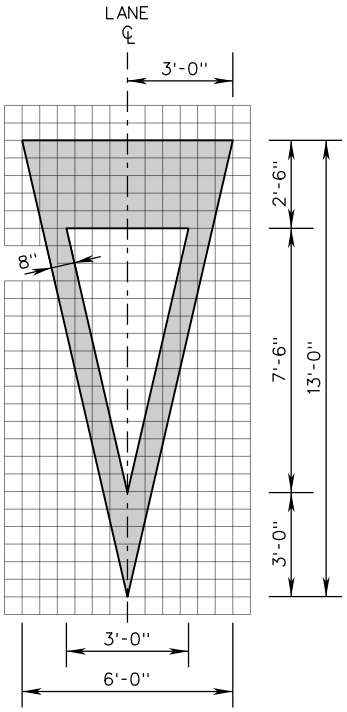

YIELD AHEAD
TRIANGLE - SMALL

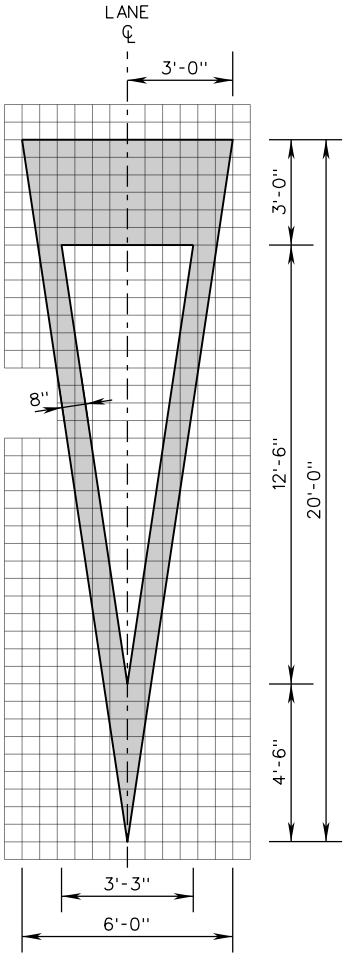

YIELD AHEAD
TRIANGLE - LARGE

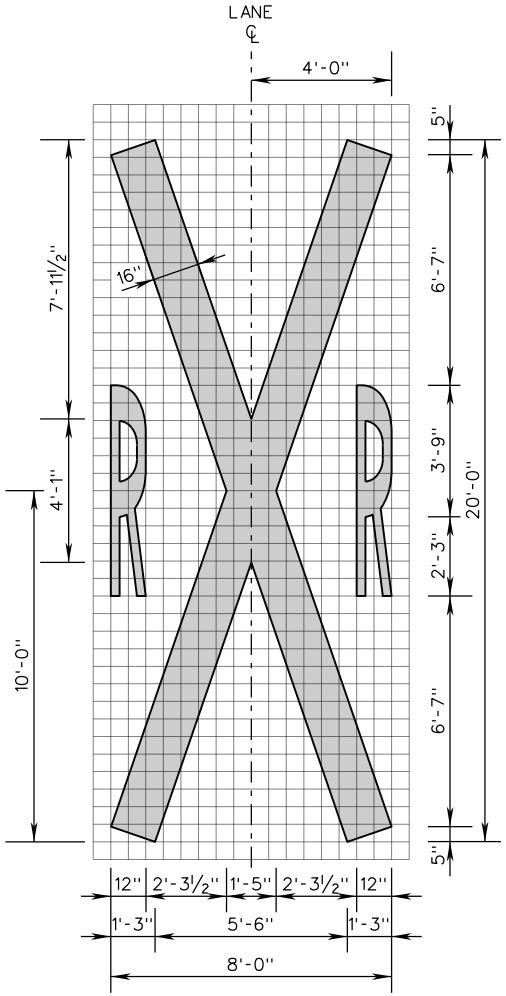

RAILROAD CROSSING
SYMBOL

SPECIFICATION REFERENCE	A COPY OF THE ORIGINAL SEALED AND SIGNED DRAWING IS ON FILE IN THE CENTRAL OFFICE.	VDOT ROAD AND BRIDGE STANDARDS
704	PAVEMENT WORD, SYMBOL, AND ARROW MARKINGS SYMBOL DETAILS VIRGINIA DEPARTMENT OF TRANSPORTATION	REVISION DATE NEW 01/15 SHEET 9 OF 15 1340.18

PM-10

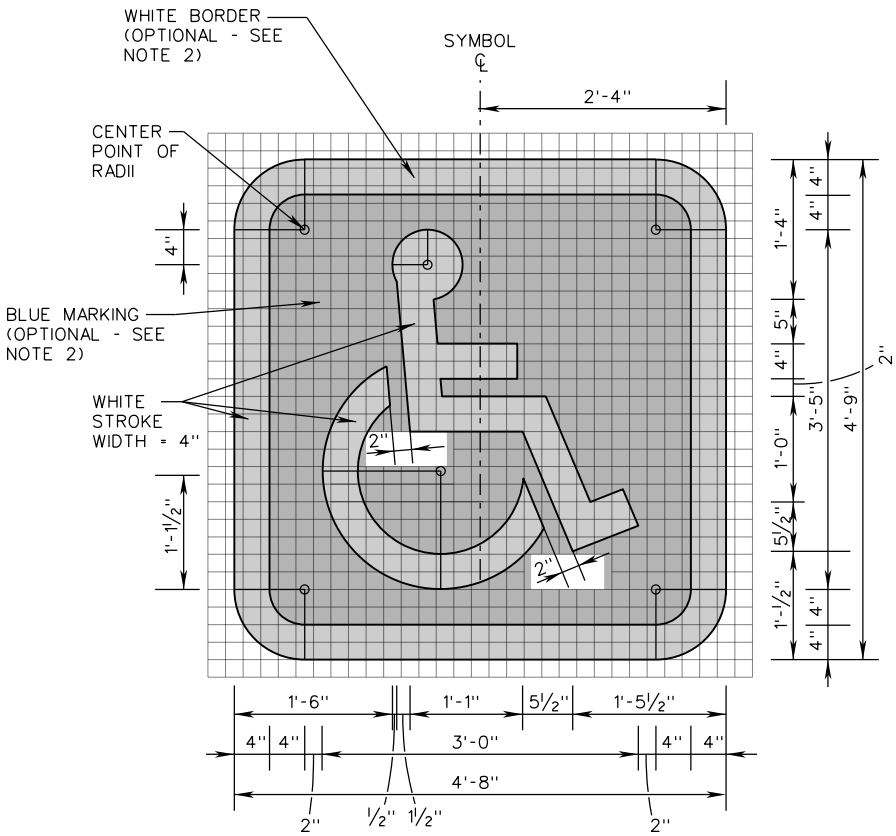

INTERNATIONAL SYMBOL OF ACCESSIBILITY - SPECIAL SIZED

NOTES:

1. 1 GRID UNIT = 2 INCHES
2. BLUE MARKING AND WHITE BORDER SHALL BE OMITTED EXCEPT WHERE SPECIFIED IN CONTRACT DOCUMENTS.

VDOT ROAD AND BRIDGE STANDARDS	A COPY OF THE ORIGINAL SEALED AND SIGNED DRAWING IS ON FILE IN THE CENTRAL OFFICE.		SPECIFICATION REFERENCE
SHEET 10 OF 15	PAVEMENT WORD, SYMBOL, AND ARROW MARKINGS		704
1340.19	SYMBOL DETAILS	REVISION DATE 04/19	
	VIRGINIA DEPARTMENT OF TRANSPORTATION		

SQUARE FOOT AREAS OF ROUTE SHIELD SYMBOLS

	DESCRIPTION	PAINT APPLICATION			ERADICATION		
	SYMBOL HEIGHT	15.0 FT	17.5 FT	20.0 FT	15.0 FT	17.5 FT	20.0 FT
95	2 DIGITS INTERSTATE SHIELD (ON LIGHT OR DARK PAVEMENT)	72.0	98.0	128.0	90.0	122.5	160.0
264	3 DIGITS INTERSTATE SHIELD (ON LIGHT OR DARK PAVEMENT)	90.0	122.5	160.0	112.5	153.5	200.0
50 50	1 OR 2 DIGITS U.S. ROUTE SHIELD						
	ON LIGHT PAVEMENT	27.5	37.5	49.0	90.0	122.5	160.0
	ON DARK PAVEMENT	90.0	122.5	160.0			
460 460	3 DIGITS U.S. ROUTE SHIELD						
	ON LIGHT PAVEMENT	37.5	50.5	66.0	112.5	153.5	200.0
	ON DARK PAVEMENT	112.5	153.5	200.0			
28 28	2 DIGITS VA PRIMARY RTE SHIELD						
	ON LIGHT PAVEMENT	27.5	37.0	48.5	90.0	122.5	160.0
	ON DARK PAVEMENT	90.0	122.5	160.0			
234 234	3 DIGITS VA PRIMARY RTE SHIELD						
	ON LIGHT PAVEMENT	37.0	50.5	65.5	112.5	153.5	200.0
	ON DARK PAVEMENT	112.5	153.5	200.0			
626 626	3 DIGITS VA SECONDARY RTE SHIELD						
	ON LIGHT PAVEMENT	30.0	41.0	53.5	90.0	122.5	160.0
	ON DARK PAVEMENT	90.0	122.5	160.0			
8900 8900	4 DIGITS VA SECONDARY RTE SHIELD						
	ON LIGHT PAVEMENT	31.0	42.0	55.0	112.5	153.5	200.0
	ON DARK PAVEMENT	112.5	153.5	200.0			

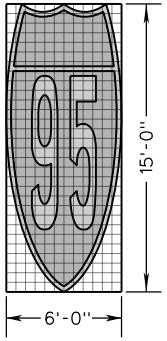

ERADICATION AREA = 15'-0" x 6'-0" ≈ 90.0 SQ.FT.

THEORETICAL BOX
ERADICATION AREA EXAMPLE
(15' SYMBOL HEIGHT)

SPECIFICATION REFERENCE	A COPY OF THE ORIGINAL SEALED AND SIGNED DRAWING IS ON FILE IN THE CENTRAL OFFICE.	VDOT ROAD AND BRIDGE STANDARDS	
704	PAVEMENT WORD, SYMBOL, AND ARROW MARKINGS SQUARE FOOT AREAS OF ROUTE SHIELD SYMBOLS VIRGINIA DEPARTMENT OF TRANSPORTATION	REVISION DATE NEW 01/15	SHEET 11 OF 15 1340.20

PM-10

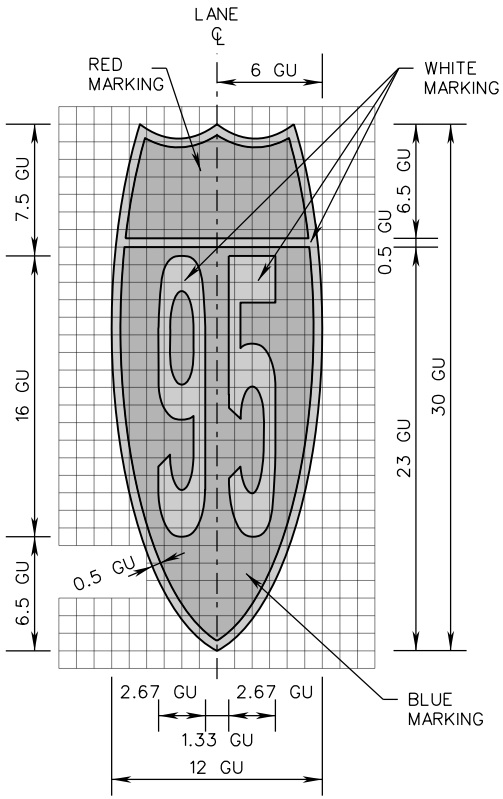

2 DIGITS INTERSTATE SHIELD ON DARK OR LIGHT PAVEMENT

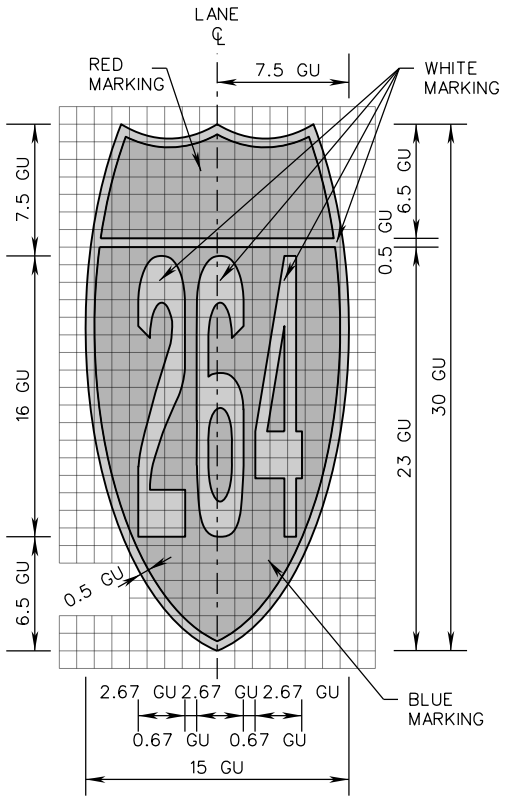

3 DIGITS INTERSTATE SHIELD ON DARK OR LIGHT PAVEMENT

NOTES:

1. SEE TABLE FOR GRID UNIT (GU) SIZE AND SHIELD AND NUMERIAL DIMENSIONS.
2. FOR THE NUMBER "1", DIVIDE NUMERAL WIDTH BY 4.

GRID UNIT (GU) SIZE	SHIELD HEIGHT	SHIELD WIDTH		NUMERAL DIMENSIONS	
		2 DIGITS	3 DIGITS	HEIGHT	WIDTH (SEE NOTE 2)
6"	15'-0"	6'-0"	7'-6"	8'-0"	1'-4"
7"	17'-6"	7'-0"	8'-9"	9'-4"	1'-6⅔"
8"	20'-0"	8'-0"	10'-0"	10'-8"	1'-9⅓"

VDOT
ROAD AND BRIDGE STANDARDS

SHEET 12 OF 15
1340.21

REVISION DATE
NEW 01/15

A COPY OF THE ORIGINAL SEALED AND SIGNED DRAWING IS ON FILE IN THE CENTRAL OFFICE.

PAVEMENT WORD, SYMBOL, AND ARROW MARKINGS

ROUTE SHIELD DETAILS

VIRGINIA DEPARTMENT OF TRANSPORTATION

SPECIFICATION REFERENCE
704

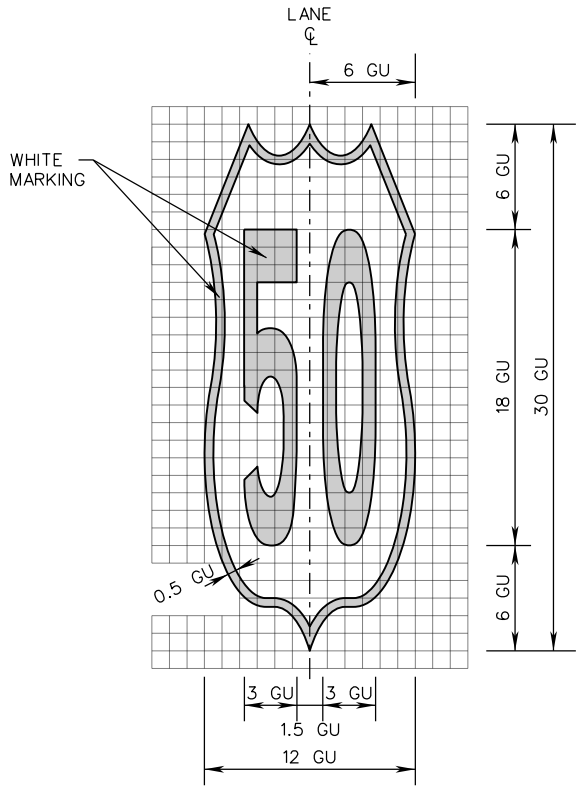

1 OR 2 DIGITS U.S. ROUTE SHIELD ON DARK PAVEMENT

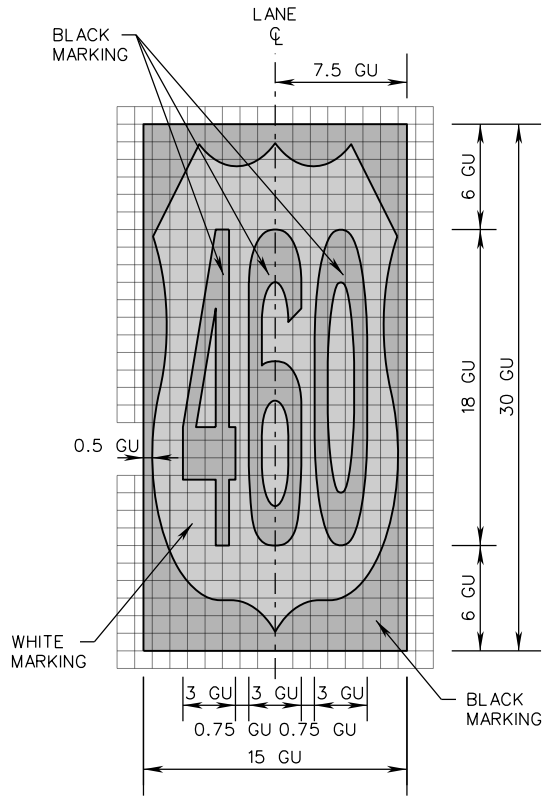

3 DIGITS U.S. ROUTE SHIELD ON LIGHT PAVEMENT

NOTES:

1. SEE TABLE FOR GRID UNIT (GU) SIZE AND SHIELD AND NUMERIAL DIMENSIONS.
2. FOR THE NUMBER "1", DIVIDE NUMERAL WIDTH BY 4.

GRID UNIT (GU) SIZE	SHIELD HEIGHT	SHIELD WIDTH		NUMERAL DIMENSIONS	
		2 DIGITS	3 DIGITS	HEIGHT	WIDTH (SEE NOTE 2)
6"	15'-0"	6'-0"	7'-6"	9'-0"	1'-6"
7"	17'-6"	7'-0"	8'-9"	10'-6"	1'-9"
8"	20'-0"	8'-0"	10'-0"	12'-0"	2'-0"

SPECIFICATION REFERENCE

704

A COPY OF THE ORIGINAL SEALED AND SIGNED DRAWING IS ON FILE IN THE CENTRAL OFFICE.

PAVEMENT WORD, SYMBOL, AND ARROW MARKINGS

ROUTE SHIELD DETAILS

VIRGINIA DEPARTMENT OF TRANSPORTATION

VDOT

ROAD AND BRIDGE STANDARDS

REVISION DATE NEW 01/15

SHEET 13 OF 15

1340.22

PM-10

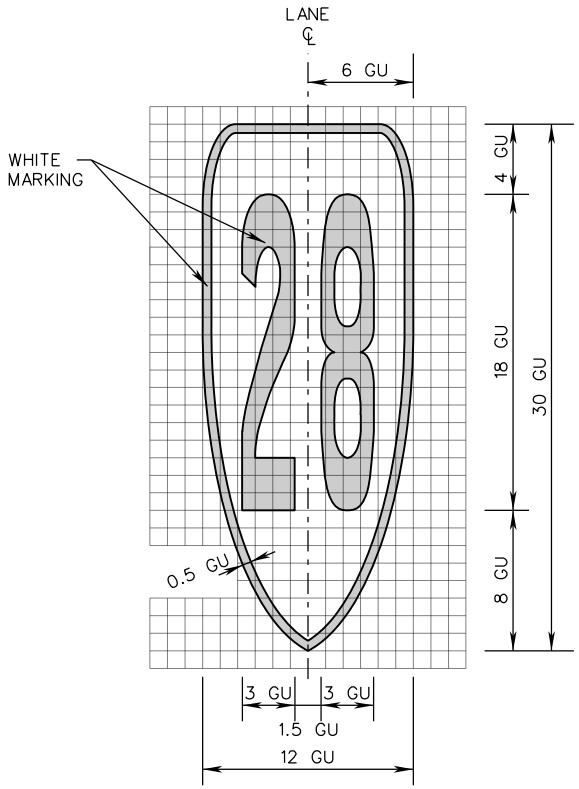

2 DIGITS VIRGINIA
PRIMARY ROUTE SHIELD
ON DARK PAVEMENT

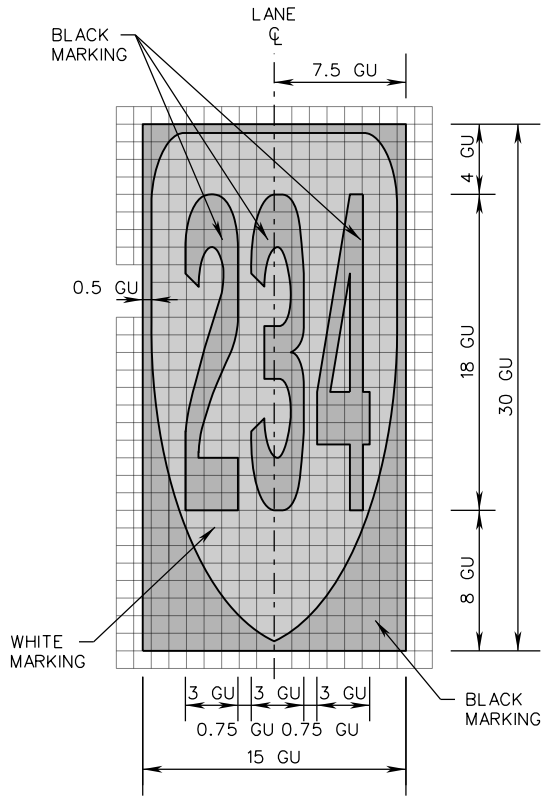

3 DIGITS VIRGINIA
PRIMARY ROUTE SHIELD
ON LIGHT PAVEMENT

NOTES:

1. SEE TABLE FOR GRID UNIT (GU) SIZE AND SHIELD AND NUMERIAL DIMENSIONS.
2. FOR THE NUMBER "1", DIVIDE NUMERAL WIDTH BY 4.

GRID UNIT (GU) SIZE	SHIELD HEIGHT	SHIELD WIDTH		NUMERAL DIMENSIONS	
		2 DIGITS	3 DIGITS	HEIGHT	WIDTH (SEE NOTE 2)
6"	15'-0"	6'-0"	7'-6"	9'-0"	1'-6"
7"	17'-6"	7'-0"	8'-9"	10'-6"	1'-9"
8"	20'-0"	8'-0"	10'-0"	12'-0"	2'-0"

VDOT
ROAD AND BRIDGE STANDARDS

SHEET 14 OF 15
1340.23

REVISION DATE
NEW 01/15

A COPY OF THE ORIGINAL SEALED AND SIGNED DRAWING IS ON FILE IN THE CENTRAL OFFICE.

PAVEMENT WORD, SYMBOL, AND ARROW MARKINGS

ROUTE SHIELD DETAILS

VIRGINIA DEPARTMENT OF TRANSPORTATION

SPECIFICATION REFERENCE
704

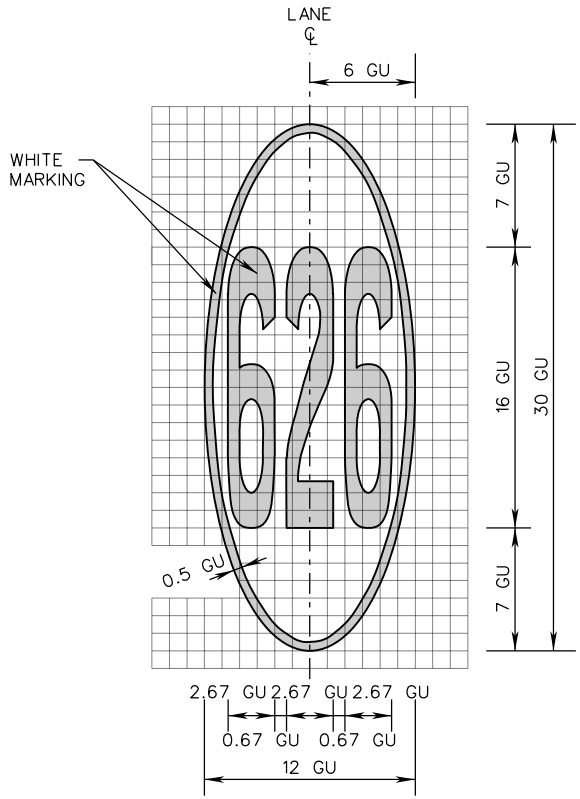

3 DIGITS VIRGINIA SECONDARY ROUTE SHIELD ON DARK PAVEMENT

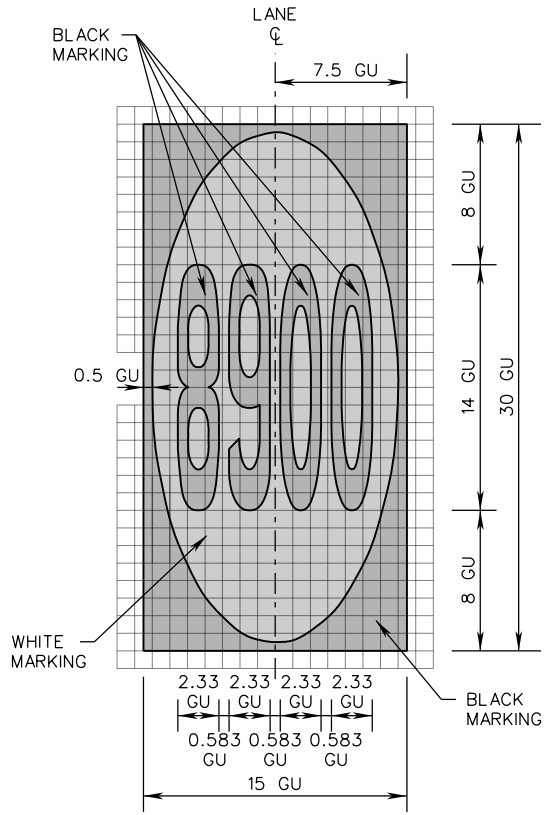

4 DIGITS VIRGINIA SECONDARY ROUTE SHIELD ON LIGHT PAVEMENT

NOTES:

1. SEE TABLE FOR GRID UNIT (GU) SIZE AND SHIELD AND NUMERIAL DIMENSIONS.
2. FOR THE NUMBER "1", DIVIDE NUMERAL WIDTH BY 4.

GRID UNIT (GU) SIZE	SHIELD HEIGHT	SHIELD WIDTH		NUMERAL DIMENSIONS			
				3 DIGITS		4 DIGITS	
		3 DIGITS	4 DIGITS	HEIGHT	WIDTH (SEE NOTE 2)	HEIGHT	WIDTH (SEE NOTE 2)
6"	15'-0"	6'-0"	7'-6"	8'-0"	1'-4"	7'-0"	1'-2"
7"	17'-6"	7'-0"	8'-9"	9'-4"	1'-6⅔"	8'-2"	1'-4⅓"
8"	20'-0"	8'-0"	10'-0"	10'-8"	1'-9⅓"	9'-4"	1'-6⅔"

SPECIFICATION REFERENCE

704

A COPY OF THE ORIGINAL SEALED AND SIGNED DRAWING IS ON FILE IN THE CENTRAL OFFICE.

PAVEMENT WORD, SYMBOL, AND ARROW MARKINGS

ROUTE SHIELD DETAILS

VIRGINIA DEPARTMENT OF TRANSPORTATION

VDOT

ROAD AND BRIDGE STANDARDS

REVISION DATE NEW 01/15

SHEET 15 OF 15

1340.24

STANDARD

THIS PAGE INTENTIONALLY LEFT BLANK

VDOT
ROAD AND BRIDGE STANDARDS

SHEET 1 OF 1

REVISION DATE

TITLE

VIRGINIA DEPARTMENT OF TRANSPORTATION

SPECIFICATION REFERENCE

SECTION 1400

UTILITIES

STANDARD

THIS PAGE INTENTIONALLY LEFT BLANK

VDOT
ROAD AND BRIDGE STANDARDS

SHEET 1 OF 1

REVISION DATE

TITLE

VIRGINIA DEPARTMENT OF TRANSPORTATION

SPECIFICATION REFERENCE

STANDARD	TITLE	PAGE
UB-1	UTILITY BEDDING AND PROTECTION	1401.01
RB-1	REACTION BLOCKING	1402.01
	REACTION BLOCKING	1402.02
	REACTION BLOCK	1402.03
VO-1	VERTICAL OFFSET	1403.01
EP-1	CONCRETE OR STEEL ENCASEMENT PIPE	1404.01
LD-1	LEAK DETECTOR	1405.01
VB-1	VALVE BOX AND VALVE MANHOLE	1406.01
VM-1	VALVE BOX AND VALVE MANHOLE	1406.02
FH-1	FIRE HYDRANT	1407.01
WM-1	WATER METER AND BOX	1408.01
BOV-1	BLOW-OFF VALVE AND BOX	1409.01
ARV-1	AIR RELEASE VALVE AND BOX	1410.01
SMH-1	SANITARY SEWER MANHOLE	1411.01
SMH-1	SANITARY SEWER MANHOLE	1411.02
F&C-1	WATER AND SANITARY SEWER FACILITIES	1412.01
SCO-1	SEWER CLEANOUT	1413.01

INDEX OF SHEETS
SECTION 1400-UTILITIES

VIRGINIA DEPARTMENT OF TRANSPORTATION

VDOT

ROAD AND BRIDGE STANDARDS

REVISION DATE

SHEET 1 OF 1

1400.01

THIS PAGE INTENTIONALLY LEFT BLANK

VDOT ROAD AND BRIDGE STANDARDS			SPECIFICATION REFERENCE
SHEET 1 OF 1	REVISION DATE	VIRGINIA DEPARTMENT OF TRANSPORTATION	
1400.02			

UB-1

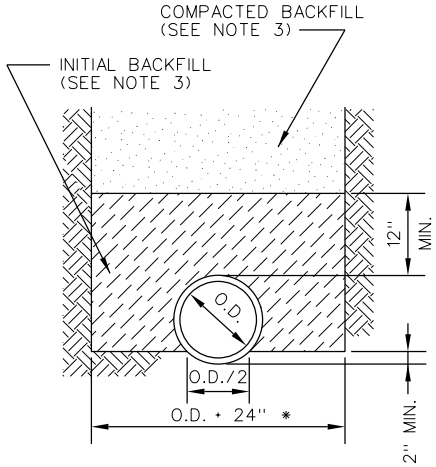

TYPE 1

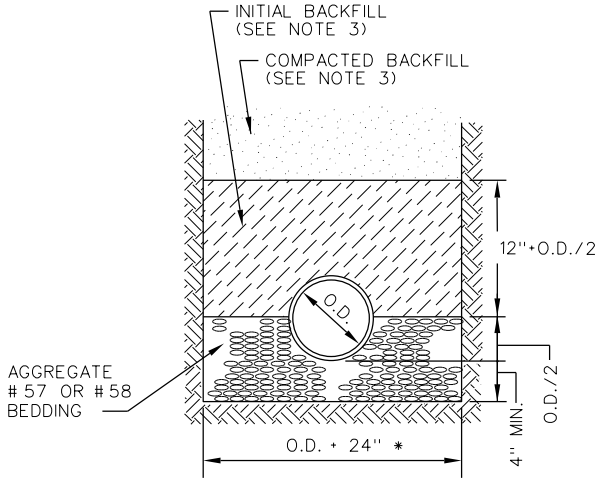

TYPE 2

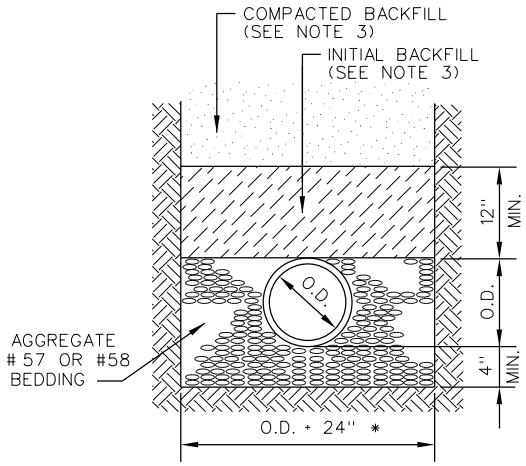

TYPE 3

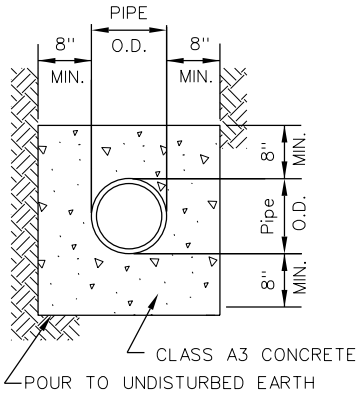

CONCRETE ENCASEMENT

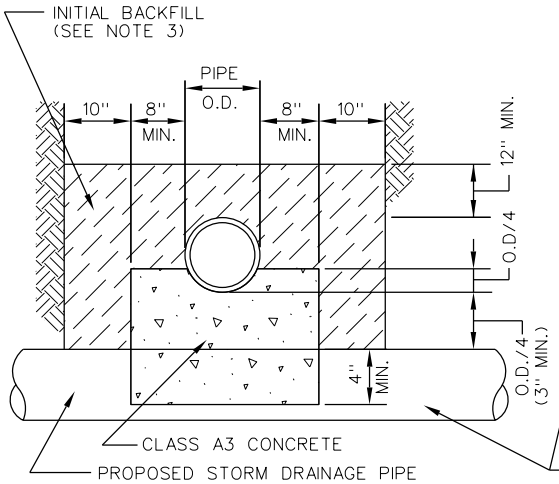

CONCRETE CRADLE

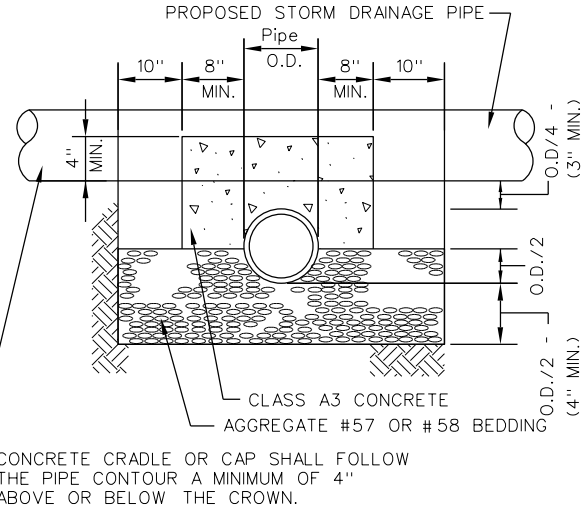

CONCRETE CAP

NOTES:

1. WHERE THE TRENCH BOTTOM IS IN ROCK, IT SHALL BE EXCAVATED TO A MINIMUM OF 8" BELOW THE BOTTOM OF THE PIPE BACKFILLED WITH BEDDING MATERIAL.
2. WHERE PIPE FOUNDATIONS ARE YIELDING, PIPE SHALL BE BEDDED ON A MINIMUM OF 8" BEDDING MATERIAL.
3. INITIAL AND COMPACTED BACKFILL SHALL MEET THE REQUIREMENTS OF SECTION 520 OF THE VDOT SPECIFICATIONS. CRUSHED GLASS CONFORMING TO THE SIZE REQUIREMENTS FOR CRUSHER RUN AGGREGATE SIZE 25 OR 26 AND MEETING THE REQUIREMENTS OF SECTION 520 OF THE VDOT SPECIFICATION MAY BE USED AS BACKFILL MATERIAL.

* FOR PIPE LESS THAN 12" THE TRENCH WIDTH MAY BE 36" MAXIMUM.

SPECIFICATION REFERENCE	UTILITY BEDDING AND PROTECTION	VDOT ROAD AND BRIDGE STANDARDS
520	(WATER AND SANITARY SEWER FACILITES)	REVISION DATE / SHEET 1 OF 1
	VIRGINIA DEPARTMENT OF TRANSPORTATION	1401.01

THIS PAGE INTENTIONALLY LEFT BLANK

VDOT ROAD AND BRIDGE STANDARDS			SPECIFICATION REFERENCE
SHEET 1 OF 1	REVISION DATE	VIRGINIA DEPARTMENT OF TRANSPORTATION	
1401.02			

RB-1

NOTE:

PAINT ALL EXPOSED STEEL WITH TWO COATS OF A WATERPROOF BITUMASTIC COMPOUND.

ALL CONCRETE SHALL BE CLASS A3.

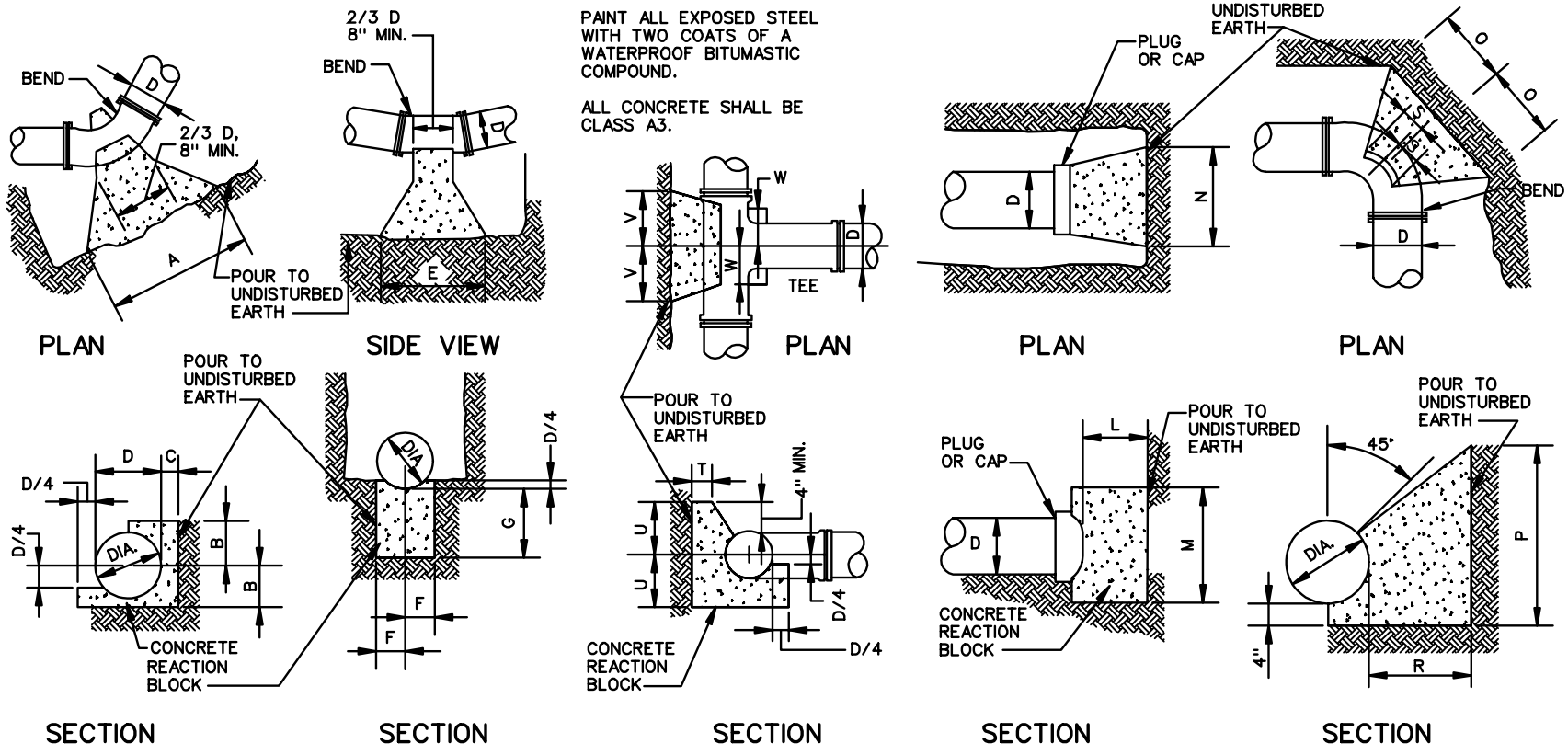

HORIZONTAL BENDS 11 1/4° -45°

UPPER VERTICAL BENDS

TEES

PLUGS

HORIZONTAL BENDS 90°

	HORIZONTAL BENDS									UPPER VERTICAL BENDS									PLUGS			HORIZONTAL BENDS				TEE			
DIA.	11 1/4°			22 1/2°			45°			11 1/4°			22 1/2°			45°						90°				BRANCH			
	A	B	C	A	B	C	A	B	C	E	F	G	E	F	G	E	F	G	L	M	N	O	P	R	S	T	U	V	W
4"	.50	.58	.75	.75	.58	.75	1.25	.58	.75	.50	.58	.58	.75	.58	.58	1.25	.58	.58	.50	1.17	1.50	1.17	1.17	1.67	.42	.75	.67	.75	.50
6"	.50	.58	.75	.75	.58	.75	1.25	.58	.75	.50	.58	.58	.75	.58	.58	1.25	.58	.58	.50	1.17	1.50	1.17	1.17	1.67	.42	.75	.67	.75	.50
8"	.67	.67	.75	1.00	.67	.75	2.00	.67	.75	.67	.67	.58	1.00	.67	.67	2.08	.75	.83	.67	1.50	2.25	1.58	1.50	1.75	.50	.75	.83	1.00	.67
10"	.83	.75	.75	1.50	.75	.83	2.50	.75	.92	.83	.75	.67	1.50	.83	.67	2.08	.75	.83	.67	2.00	2.50	1.67	2.08	1.75	.50	.83	1.00	1.25	.67
12"	1.00	.83	.75	1.75	.92	.92	2.92	.92	1.17	1.00	.83	.67	1.75	.83	.67	2.50	.92	.92	.83	2.33	3.25	2.00	2.50	1.92	.58	1.00	1.25	1.42	.67
16"	1.33	1.00	.75	2.33	1.00	1.17	3.67	1.25	1.42	1.33	1.00	.75	2.25	.83	.75	3.33	1.25	1.25	1.00	2.92	4.17	2.08	3.00	2.17	.83	1.17	1.67	1.83	.83
20"	1.67	1.17	1.00	3.17	1.17	1.33	4.75	1.50	1.83	1.67	1.17	.83	3.00	1.17	1.00	4.17	1.50	1.50	1.33	3.75	5.17	3.50	3.83	2.83	1.00	1.33	2.08	2.25	1.17
24"	2.00	1.33	1.00	4.00	1.33	1.50	6.08	1.67	1.92	2.00	1.33	1.00	3.50	1.33	1.00	5.00	1.75	1.75	1.67	4.33	6.25	4.67	4.00	3.00	1.00	1.50	2.50	2.67	1.33
30"	2.50	1.50	1.08	5.00	1.58	1.75	7.95	2.00	3.08	2.50	1.58	1.08	4.17	1.58	1.08	6.25	2.25	2.25	2.00	5.42	7.42	5.75	5.00	3.83	1.17	1.75	3.08	3.92	1.83
36"	3.00	1.92	1.17	5.75	2.00	2.00	8.92	2.50	3.33	3.00	1.58	1.17	5.33	2.00	1.17	7.50	2.50	2.67	2.00	6.50	9.00	6.83	6.00	4.83	1.17	2.00	3.75	3.92	1.83

SPECIFICATION REFERENCE

REACTION BLOCKING

(WATER AND SANITARY SEWER FACILITIES)

VIRGINIA DEPARTMENT OF TRANSPORTATION

VDOT

ROAD AND BRIDGE STANDARDS

REVISION DATE

SHEET 1 OF 3

1402.01

RB-1

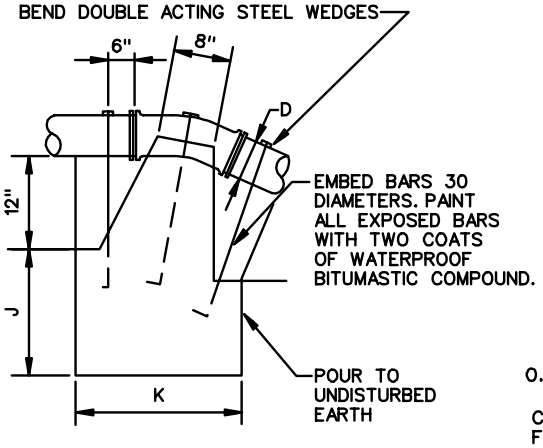

ELEVATION

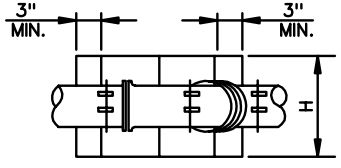

PLAN

LOWER VERTICAL BENDS
4" TO 12" MAINS

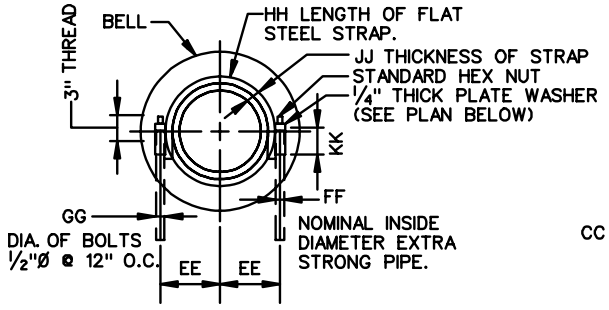

CROSS SECTION

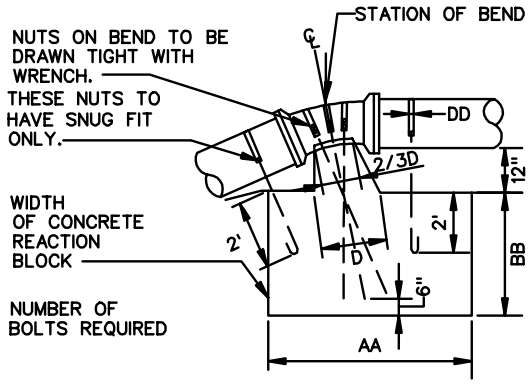

ELEVATION

NOTES:

1. FOR 11 1/4° BENDS USE ONE STRAP ON BEND WITH ANCHOR BOLTS ON CENTER LINE OF BEND.
2. PAINT ALL EXPOSED STEEL WITH TWO COATS OF A WATERPROOF BITUMASTIC COMPOUND.

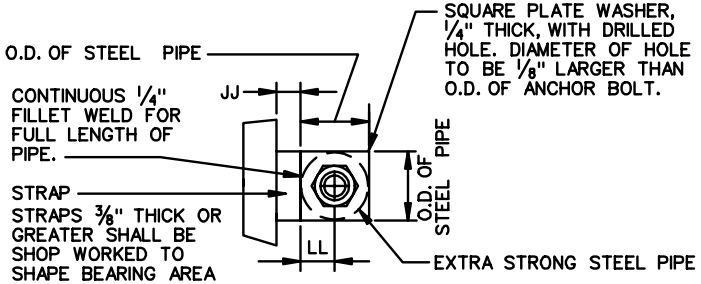

PLAN

STRAP CONNECTION

LOWER VERTICAL BENDS
16" AND LARGER MAINS

DIA.	LOWER VERTICAL BENDS									
	11 1/4°			22 1/2°			45°			
	H	J	K	H	J	K	H	J	K	
4"	1.50	1.25	2.00	2.00	1.83	2.50	2.50	2.50	3.00	
6"	1.50	1.25	2.00	2.00	1.83	2.50	2.50	3.00	3.00	
8"	1.50	1.75	3.33	3.33	2.25	3.25	3.25	3.25	4.50	
10"	1.50	1.25	3.67	3.67	2.50	4.00	4.00	3.67	4.75	
12"	3.00	2.00	4.00	4.00	2.50	4.50	4.50	3.67	5.00	

LOWER VERTICAL BENDS

DIA.	LOWER VERTICAL BENDS REINFORCING BARS			11 1/4°												22 1/2°												45°											
	11 1/4	22 1/2	45	AA	BB	CC	DD	EE	FF	GG	HH	JJ	KK	LL	MM	AA	BB	CC	DD	EE	FF	GG	HH	JJ	KK	LL	MM	AA	BB	CC	DD	EE	FF	GG	HH	JJ	KK	LL	MM
4"	3-#4	3-#4	3-#4																																				
6"	3-#4	3-#4	3-#4																																				
8"	3-#4	3-#4	3-#4																																				
10"	3-#4	3-#4	3-#5																																				
12"	3-#4	3-#4	3-#5																																				
16"				4.00	2.00	3.50	.17	.81	.08	.06	2.83	.02	.19	.06	6	5.75	2.5	4.50	.17	.81	.08	.06	2.83	.02	.19	.06	10	6.67	4.00	5.50	.17	.81	.08	.06	2.83	.02	.19	.06	10
20"				5.00	2.50	4.00	.17	.99	.08	.06	3.53	.03	.19	.06	6	7.50	3.00	4.75	.17	.99	.08	.06	3.58	.03	.19	.06	10	8.25	4.75	6.00	.17	.99	.08	.06	3.58	.03	.19	.06	10
24"				5.75	2.50	4.25	.17	1.17	.10	.07	4.42	.03	.42	.08	6	8.50	3.67	5.00	.21	1.18	.12	.08	4.52	.03	.42	.08	10	9.50	5.50	6.50	.21	1.18	.12	.08	4.42	.03	.42	.11	10
30"				6.50	2.67	5.50	.21	1.44	.12	.08	5.67	.04	.50	.08	6	9.00	4.50	5.75	.21	1.44	.12	.09	5.67	.04	.50	.08	10	11.25	6.25	7.00	.21	1.44	.12	.09	5.67	.04	.50	.08	10
36"				7.00	4.00	5.00	.21	1.71	.17	.10	7.50	.04	.54	.07	6	10.00	5.50	6.17	.21	1.71	.17	.11	7.50	.04	.54	.07	10	12.00	7.00	8.50	.21	1.71	.17	.09	7.50	.04	.54	.07	10

VDOT
ROAD AND BRIDGE STANDARDS

SHEET 2 OF 3

REVISION DATE

1402.02

REACTION BLOCKING

(WATER AND SANITARY SEWER FACILITIES)

VIRGINIA DEPARTMENT OF TRANSPORTATION

SPECIFICATION REFERENCE

RB-1

TEES TURNED UP				
BRANCH SIZE				
D	NN	NN	PP	RR
DIA.	11 1/4° 22 1/2°	45°	11 1/4° 22 1/2° 45°	11 1/4° 22 1/2° 45°
4"	3.00	2.50	2.50	2.50
6"	3.00	2.50	2.50	2.50
8"	3.00	2.50	2.50	2.50
10"	3.00	2.50	2.50	2.67
12"	4.00	3.00	2.50	2.83

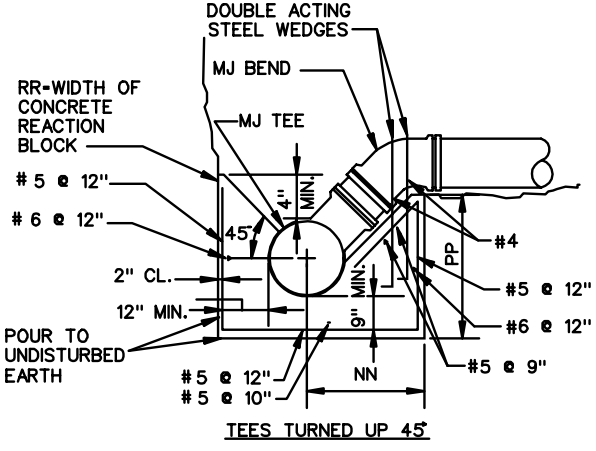

STRAPPING DETAILS
FOR TEES TURNED UP

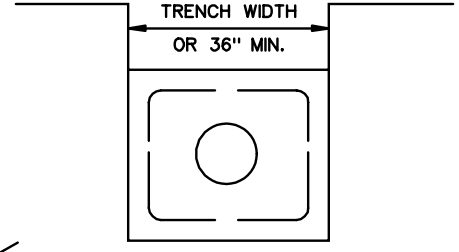

SECTION A-A

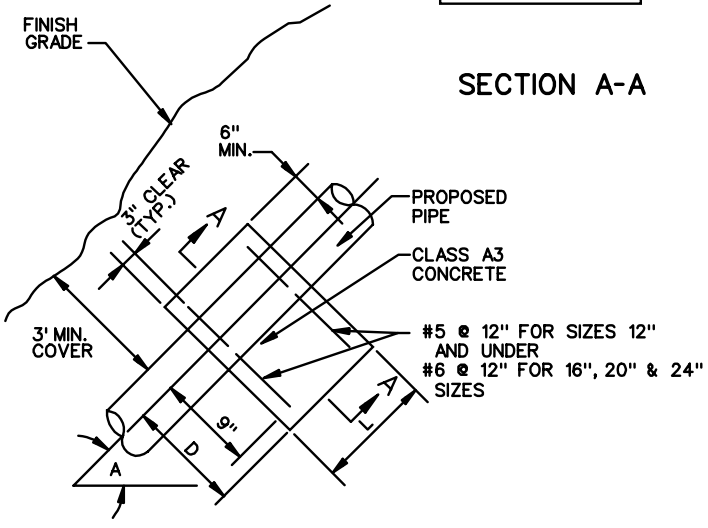

REACTION BLOCK - STRAIGHT SLOPING PIPE							
SIZE	4"	6"	8"	12"	16"	20"	24"
"D"	12"	15"	15"	18"	21"	24"	27"
"L"	18"	21"	24"	27"	30"	33"	36"

NOTE:

THE STRAIGHT RUN PIPE SHALL BE PROVIDED WITH ANCHOR BLOCKS SPACED THUS:

ANGLE "A"	
0° - 10°	ANCHOR BLOCKS NOT NEEDED
10° - 16°	SPACING @ 100'
16° - 20°	SPACING @ 60'

STRAIGHT PIPE
CONCRETE ANCHOR BLOCK

SPECIFICATION REFERENCE

REACTION BLOCK

(WATER AND SANITARY SEWER FACILITIES)

VIRGINIA DEPARTMENT OF TRANSPORTATION

VDOT
ROAD AND BRIDGE STANDARDS

REVISION DATE

SHEET 3 OF 3

1402.03

VO-1

SIZE (DIA. - INCHES)	4"	6"	8"	10"	12"	16"	18"	20"	24"
LENGTH ("L" - FEET)	12'	17'	22'	26'	31'	39'	43'	47'	55'

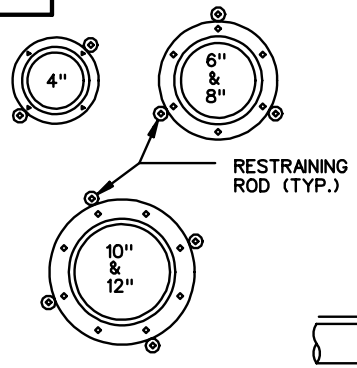

SEE TABLE FOR 16" - 24"

TABLE		
PIPE SIZE	NUMBER OF BOLTS	NUMBER OF RODS
16"	12	6
18"	12	6
20"	14	6
24"	16	8

SEE NOTE 7 FOR REDUCTION IN NUMBER OF RODS REQUIRED.

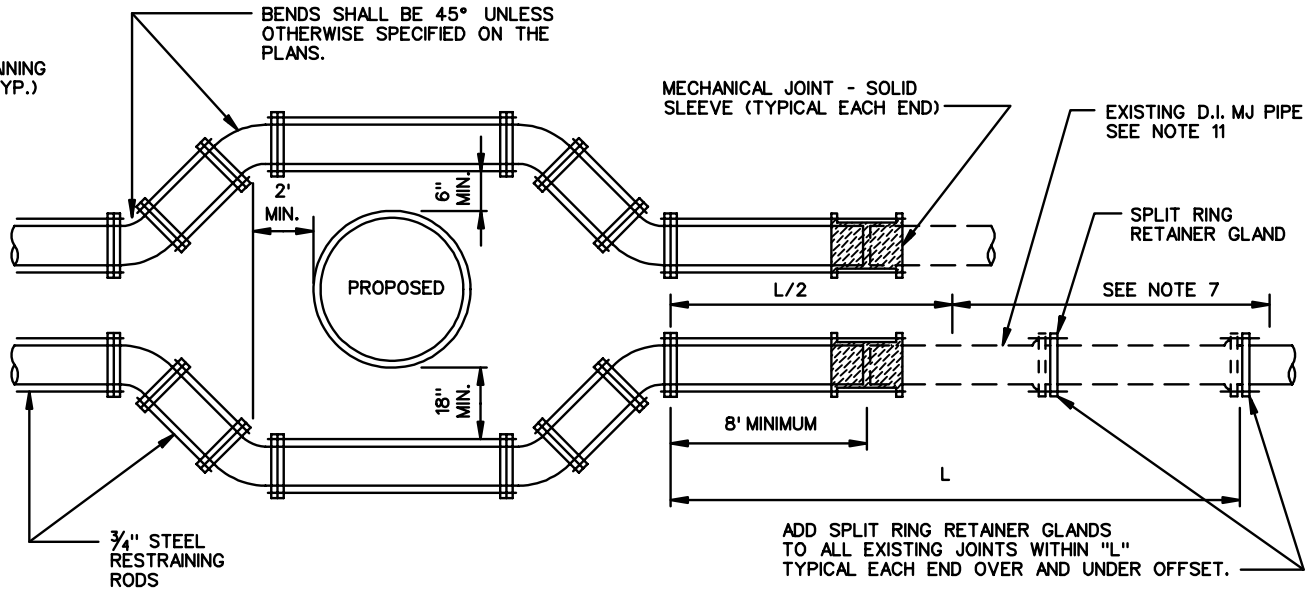

DESIGN CONDITIONS

PRESSURE - 150 PSI
DEPTH OF COVER - 3 FEET
TYPE SOIL - SILT
ROD STRESS - 25,000 PSI

NOTES:

1. RETAINER GLANDS ARE REQUIRED AT EACH FITTING.
2. ALL PIPE AND FITTINGS SHALL BE DUCTILE IRON, MECHANICAL JOINT, CLASS 52 (MIN). WATER MAIN AND FITTINGS SHALL BE CEMENT MORTAR LINED.
3. FOR 12" AND SMALLER LINES, MECHANICAL JOINT OFFSET FITTINGS MAY BE USED IN LIEU OF THE 45° BENDS SHOWN SUBJECT TO THE APPROVAL OF THE ENGINEER. IF USED, THE OFFSETS MUST RESULT IN THE CLEARANCES SHOWN BEING MET OR EXCEEDED.
4. RODS MAY BE INSERTED THROUGH BOLT HOLES IN LIEU OF USING TIE-BOLTS. IF USED, KEEPER NUT & WASHER MUST BE INSTALLED BEHIND GLAND.
5. BOLT HOLES ARE SHOWN AS NORMALLY PROVIDED IN MECHANICAL JOINT FITTINGS, I.E. STRADDLING THE VERTICAL AXIS WHEN FITTING IS POSITIONED FOR A HORIZONTAL CHANGE OF DIRECTION. FITTINGS WITH BOLT HOLES OTHERWISE ORIENTED SHOULD NOT BE USED IN RODDED ASSEMBLIES.
6. TIE BOLTS AND THREADED RODS SHALL BE ¾" WITH A MINIMUM YIELD STRENGTH OF 7550 POUNDS EACH. SPACE SYMMETRICALLY AROUND PIPE.
7. NUMBER OF RODS MAY BE REDUCED TO 50% OF THE NUMBER INDICATED AT L/2 FROM THE BEND AND BEYOND. TWO RODS MINIMUM REQUIRED PER JOINT.
8. ALL RODS AND FASTENERS SHALL BE GIVEN TWO COATS OF ASPHALTIC PAINT AFTER ASSEMBLY.
9. EXISTING C.I. PIPE SHALL BE REPLACED WITH AN 8' MINIMUM LENGTH OF D.I. PIPE AT BOTH ENDS OF THE OFFSET AND RETAINER GLANDS INSTALLED.
10. THE EXISTING PIPING SHALL HAVE ALL JOINTS WITHIN THE LENGTH "L" RESTRAINED BY ADDING A SPLIT RING RETAINER GLAND ("MEG-A-LUG" OR EQUAL) WITH BOLTS TO THE M.J. BELL.
11. LENGTH "L" IN FEET SHALL CONFORM TO THE TABLE ABOVE.
12. SPLIT RING RETAINER GLANDS ARE FOR USE ON DUCTILE IRON MECHANICAL JOINT PIPE ONLY. IF EXISTING PIPE IS ANY OTHER MATERIAL, REMOVE AND REPLACE WITH D.I. MECHANICAL JOINT PIPE FOR THE LENGTH "L" SPECIFIED.

VDOT
ROAD AND BRIDGE STANDARDS

SHEET 1 OF 1
REVISION DATE
1403.01

VERTICAL OFFSET
(WATER AND SANITARY SEWER FACILITIES)

VIRGINIA DEPARTMENT OF TRANSPORTATION

SPECIFICATION REFERENCE

EP-1

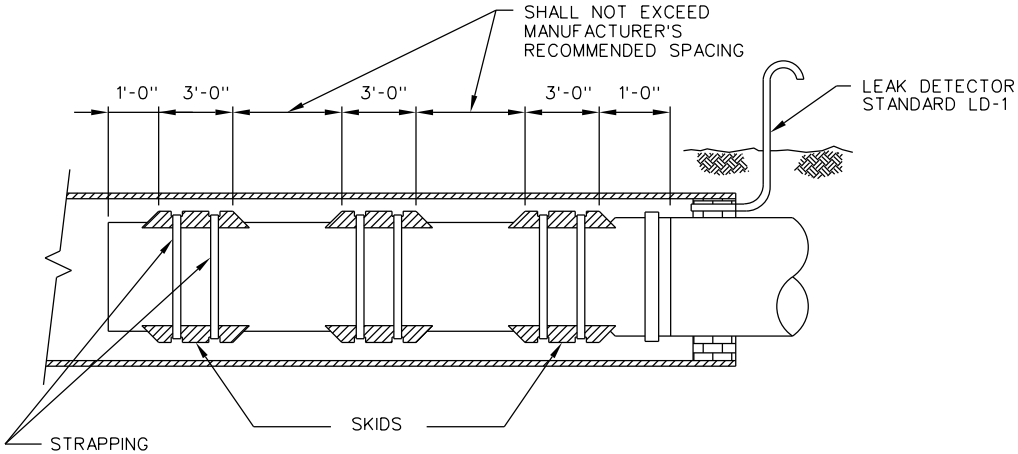

SECTION
ENCASEMENT PIPE WITH CARRIER PIPE

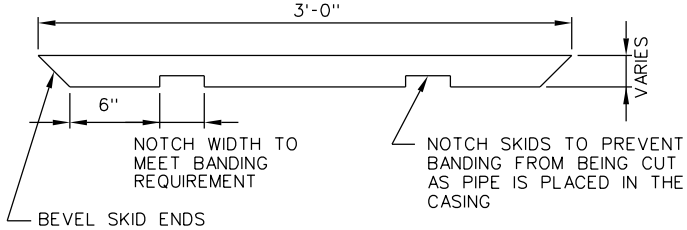

SKID

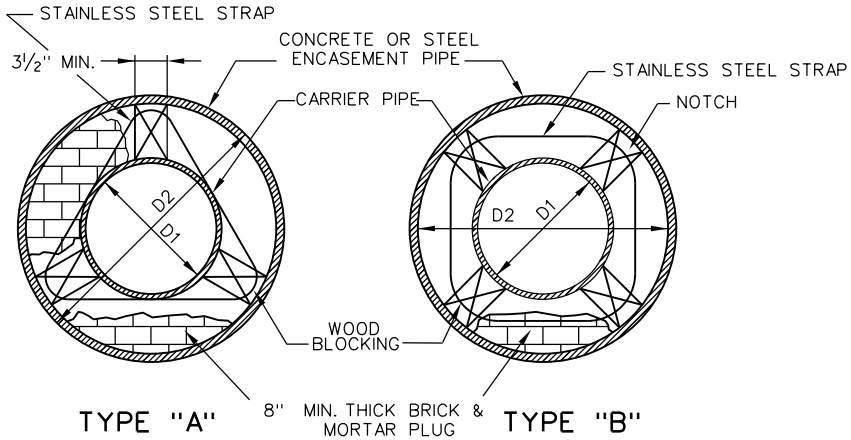

TYPE "A" TYPE "B"

NOTES:

1. TIMBER SKIDS SHALL BE LOCUST, CYPRESS, PRESERVATIVE TREATED HARDWOOD, NEOPRENE, NYLON, PLASTIC OR OTHER MATERIAL OF HIGH ABRASION RESISTANCE AND A LOW FRICTION COEFFICIENT APPROVED BY THE ENGINEER. PRESERVATIVE FOR TIMBER SKIDS SHALL CONFORM TO SECTION 236 OF THE SPECIFICATIONS.
2. METAL STRAPS AND CLIPS HOLDING BLOCKING TO CARRIER PIPE SHALL BE STAINLESS STEEL WITH A MINIMUM CROSS SECTION OF 0.014 SQ. IN. STRAP SPACING SHALL BE A MINIMUM OF TWO (2) BANDS PER SKID LENGTH.
3. STEEL ENCASEMENT PIPE SHALL BE GRADE B AND SHALL CONFORM TO SECTION 232 OF THE SPECIFICATIONS OR AS SPECIFIED
4. CARRIER PIPE SHALL BE PUSHED OR PULLED THROUGH THE ENCASEMENT PIPE SO THAT JOINTS ARE ALWAYS BEING COMPRESSED.
5. CARRIER PIPE SHALL BE WRAPPED WITH TAR PAPER AT MASONRY PLUG.
6. MASONRY PLUG SHALL BE WATERTIGHT.
7. CONCRETE PIPE FOR H-20 LIVE LOAD AS PER STANDARD PC-1.
8. ENCASEMENT PIPE SHALL BE BEDDED IN ACCORDANCE WITH STANDARD PB-1.

SPECIFICATION REFERENCE	CONCRETE OR STEEL ENCASEMENT PIPE	VDOT ROAD AND BRIDGE STANDARDS	
232 236	VIRGINIA DEPARTMENT OF TRANSPORTATION	REVISION DATE	SHEET 1 OF 1 1404.01

LD-1

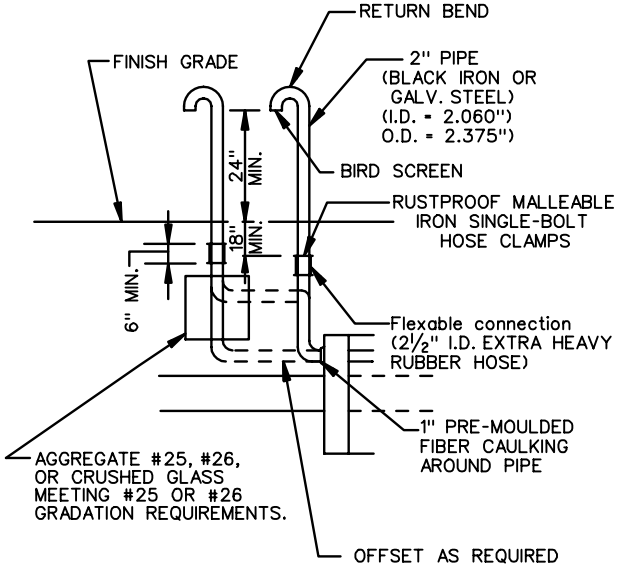

Notes:

WRAP CONNECTION IN POLYETHELENE AND PLASTER WITH ROOFING CEMENT OR ASPHALTIC MATERIAL.

STANDARD LEAK DETECTOR

LD-1

VDOT ROAD AND BRIDGE STANDARDS	LEAK DETECTOR	SPECIFICATION REFERENCE
SHEET 1 OF 1 / REVISION DATE	VIRGINIA DEPARTMENT OF TRANSPORTATION	
1405.01		

VB-1

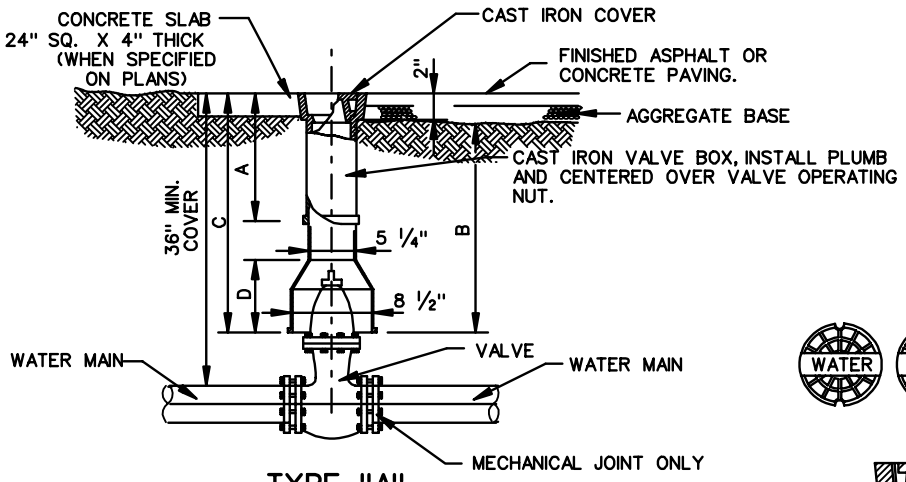

TYPE "A"
(SCREW TYPE)

TYPE "A"

EXTENSION RANGE - C	DIM. A	DIM. B	DIM. D
18"-24"	10.5"	14.5"	6.5"
24"-29"	15"	24"	6.5"
36"-48"	15"	36"	8.5"
36"-60"	26"	36"	8.5"

LONGER BOXES ARE MADE BY ADDING EXTENSIONS.

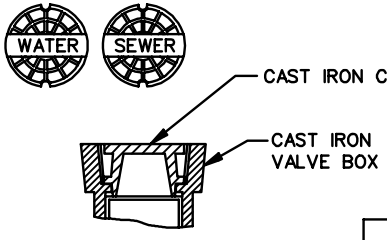

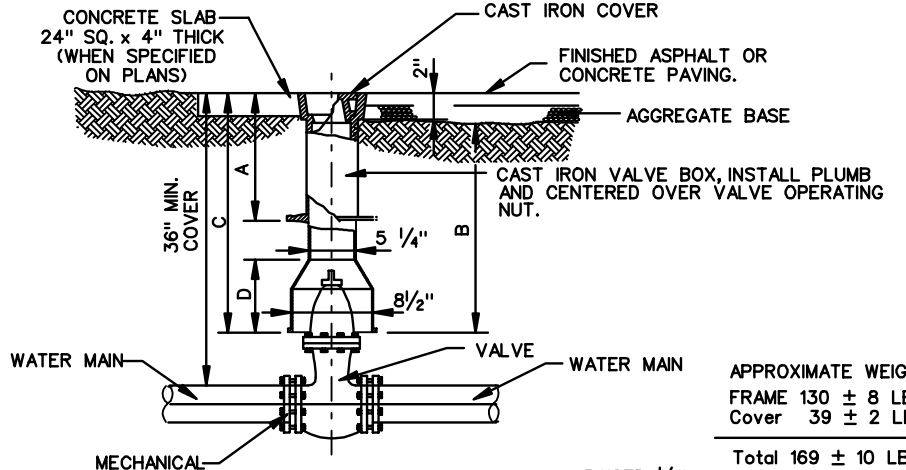

TYPE "B"
(SLIP TYPE)

TYPE "B"

EXTENSION RANGE - C	DIM. A	DIM. B	DIM. D
18"-24"	10.5"	15"	6.5"
23"-29"	15.5"	15"	6.5"
24"-36"	15.5"	24.5"	6.5"
36"-48"	15.5"	26"	8.5"
38"-48"	26.5"	24.5"	6.5"
36"-60"	26.5"	36"	8.5"

LONGER BOXES ARE MADE BY ADDING EXTENSIONS.

APPROXIMATE WEIGHTS
FRAME 130 ± 8 LBS.
Cover 39 ± 2 LBS.

Total 169 ± 10 LBS.

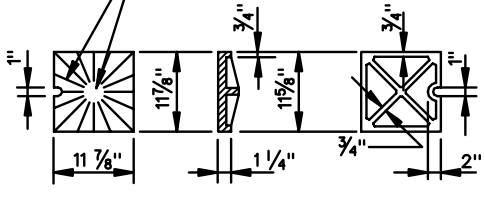

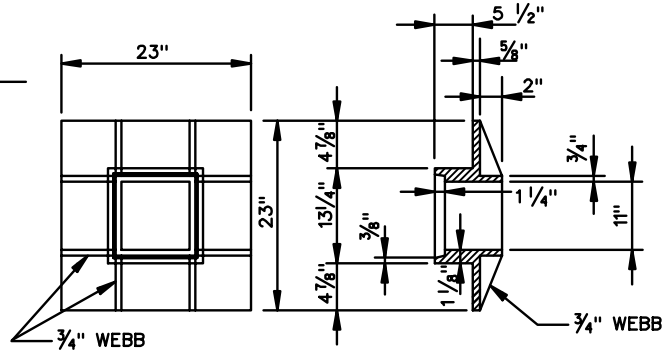

TYPE "C"

NOTE:

1. CAST IRON SHALL CONFORM TO ASTM A-48M CLASS 30S.

SPECIFICATION REFERENCE	VALVE BOX AND VALVE MANHOLE (WATER AND SANITARY SEWER FACILITY) VIRGINIA DEPARTMENT OF TRANSPORTATION	VDOT ROAD AND BRIDGE STANDARDS REVISION DATE	SHEET 1 OF 2 1406.01

VM-1

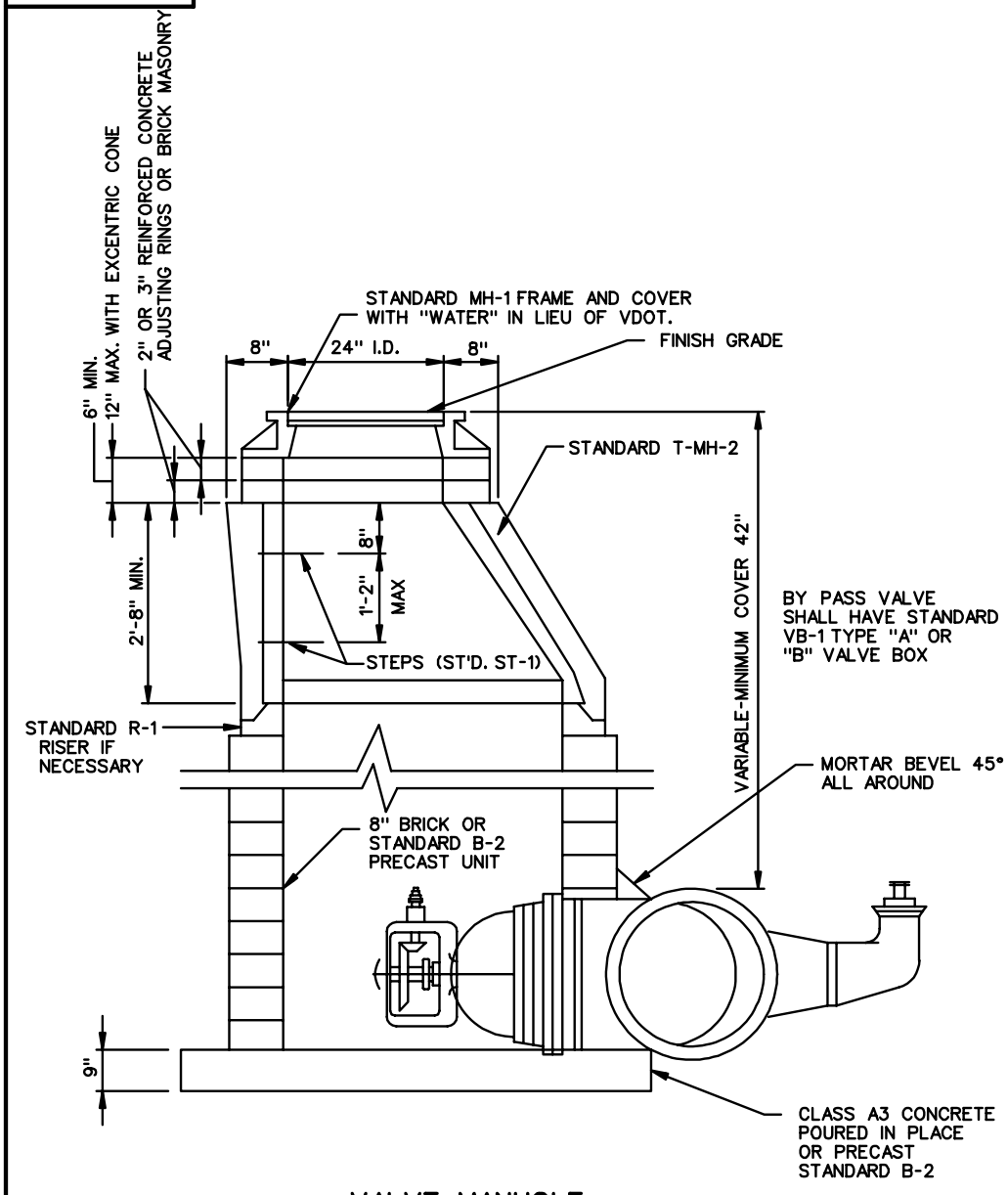

VALVE MANHOLE

VB-1

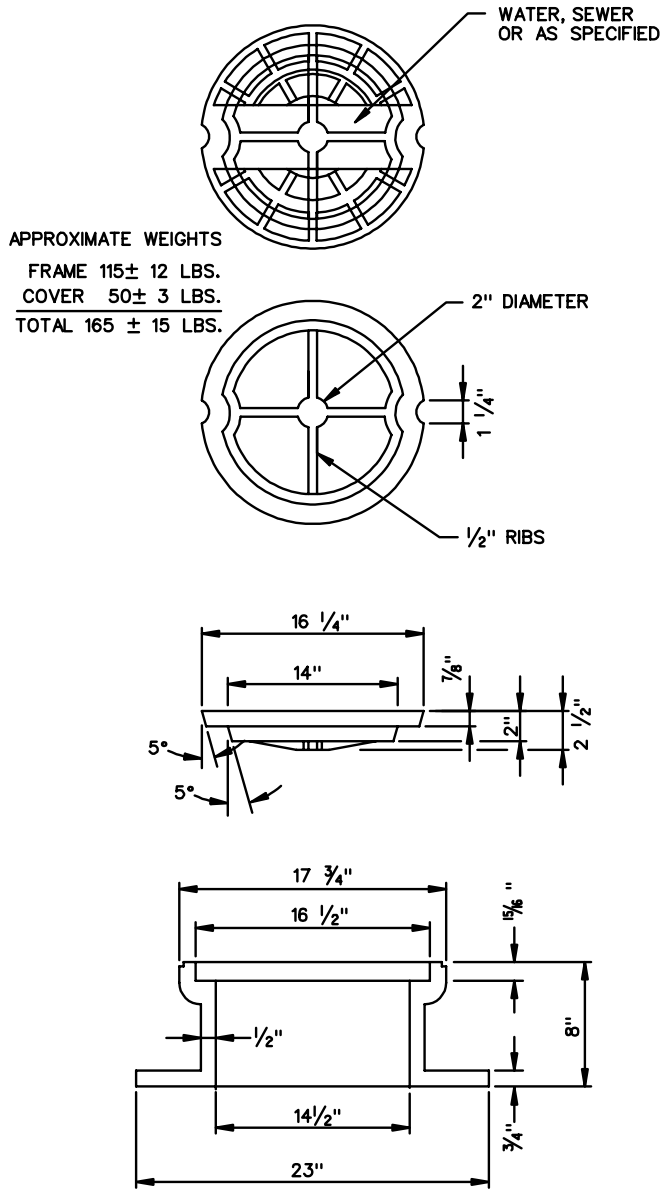

TYPE "D"
VALVE BOX

VDOT
ROAD AND BRIDGE STANDARDS

SHEET 2 OF 2

REVISION DATE

1406.02

VALVE BOX AND VALVE MANHOLE

(WATER AND SANITARY SEWER FACILITIES)

VIRGINIA DEPARTMENT OF TRANSPORTATION

SPECIFICATION REFERENCE

FH-1

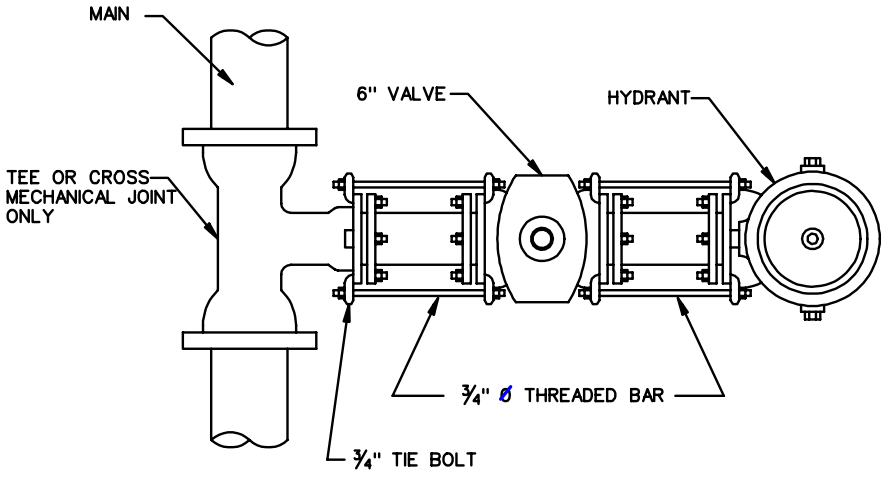

TYPE 1 RESTRAINT

NOTES:

RODS MAY BE INSERTED THROUGH BOLT HOLES IN LIEU OF USING TIE-BOLTS. IF USED, KEEPER NUT & WASHER MUST BE INSTALLED BEHIND GLAND.

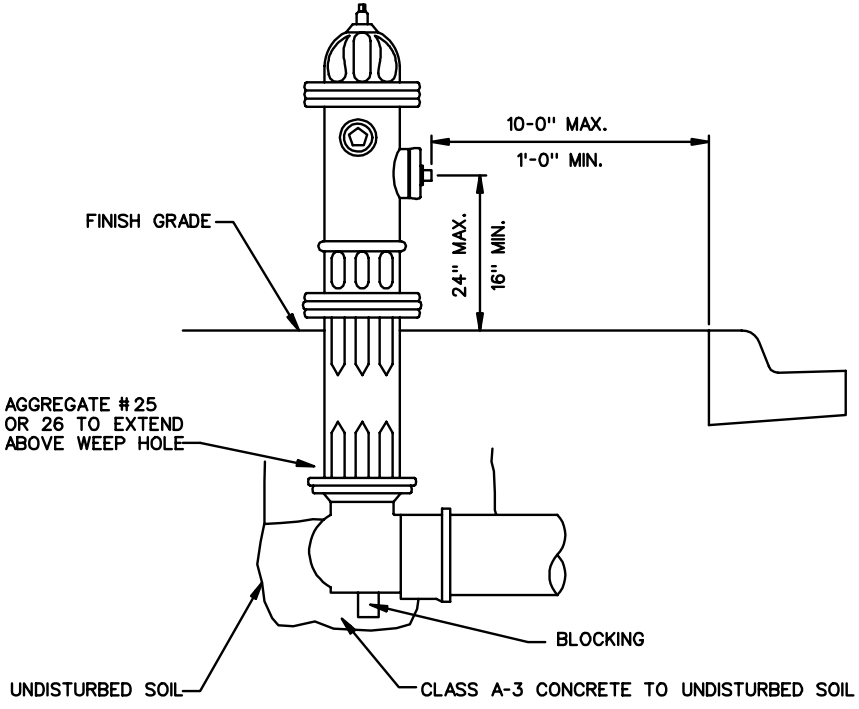

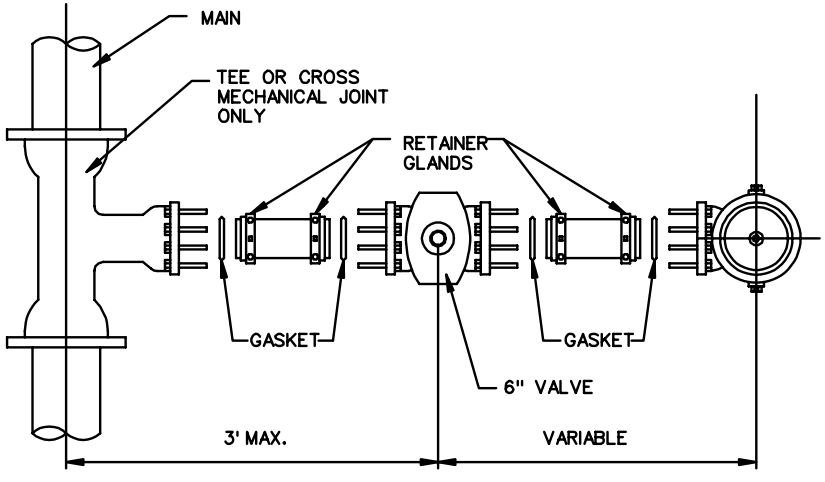

TYPE 2 RESTRAINT

NOTES:

1. HYDRANTS TO BE SET WITH BURY LINE POSITIONED AT GRADE WITH NOZZLES SET AS INDICATED ABOVE.
2. WHEN SET BEHIND CURB THE HOSE NOZZLES ARE TO BE PARALLEL OR AT RIGHT ANGLES TO THE CURB, WITH THE PUMPER NOZZLE FACING THE CURB.
3. BOWL OF THE HYDRANT TO BE BLOCKED AGAINST UNDISTURBED EARTH WITH CLASS A3 CONCRETE OR AS DIRECTED BY THE ENGINEER.
4. FIRE HYDRANTS SHALL HAVE TWO 2 ½" HOSE NOZZLE AND THE SIZE OF THE PUMPER NOZZLE & TYPE OF OPERATING NUT SHALL BE AS SPECIFIED ON THE PLANS.

SPECIFICATION REFERENCE	FIRE HYDRANT VIRGINIA DEPARTMENT OF TRANSPORTATION	VDOT ROAD AND BRIDGE STANDARDS	
		REVISION DATE	SHEET 1 OF 1
			1407.01

WM-1

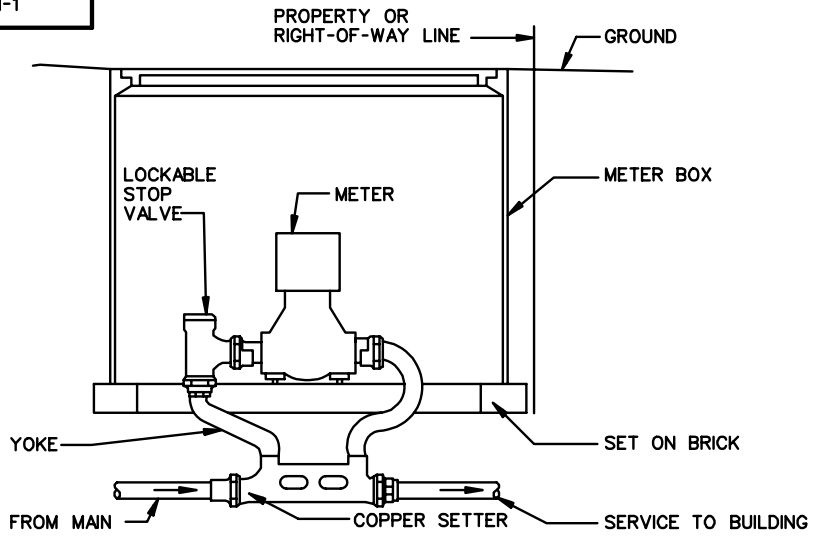

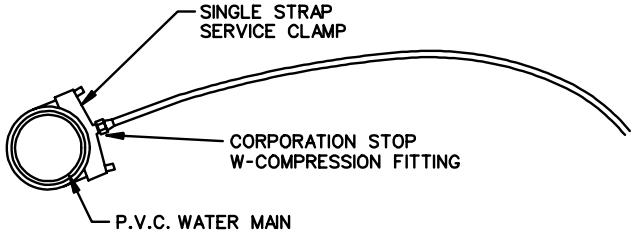

P.V.C. TAP INSTALLATION

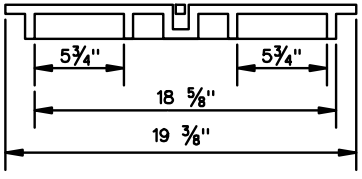

SECTION BB

NOTE:

DETAIL IS FOR ⅝" THRU
1" DISC METERS

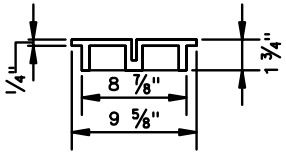

SECTION CC

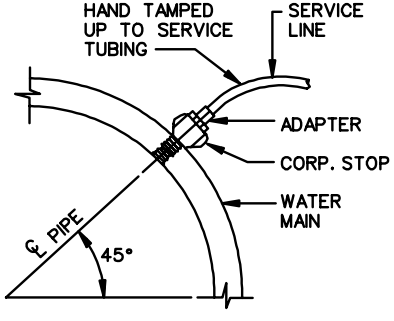

C.I./D.I. TAP INSTALLATION

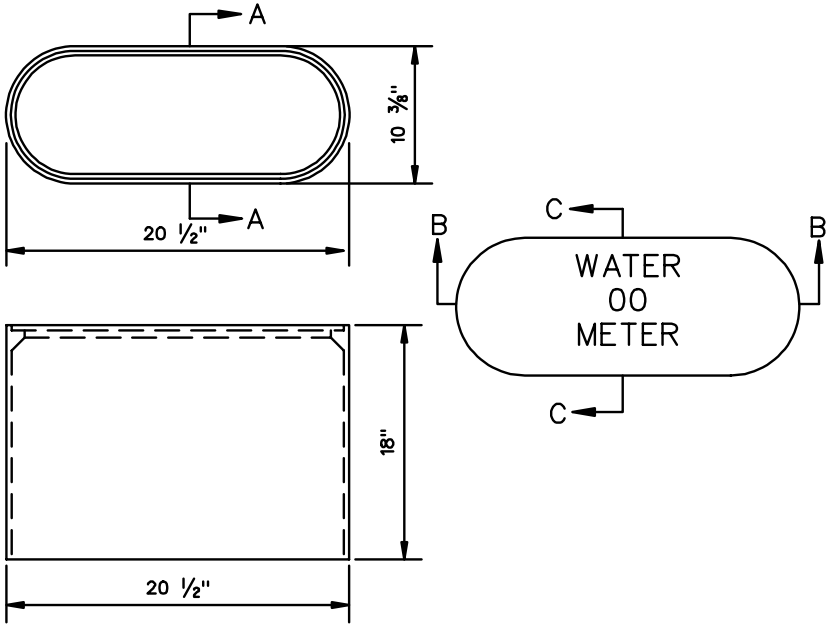

WATER METER BOX
FOR ⅝" THRU 1" METER

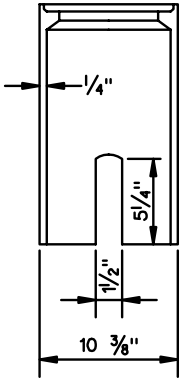

SECTION AA

CAST IRON SHALL CONFORM TO ASTM A-48 CLASS 30S
ALL COPPER FITTINGS SHALL BE FLARED TYPE

VDOT ROAD AND BRIDGE STANDARDS	WATER METER AND BOX (WATER SERVICE LINES) VIRGINIA DEPARTMENT OF TRANSPORTATION		SPECIFICATION REFERENCE
SHEET 1 OF 1		REVISION DATE	
1408.01			

BOV-1

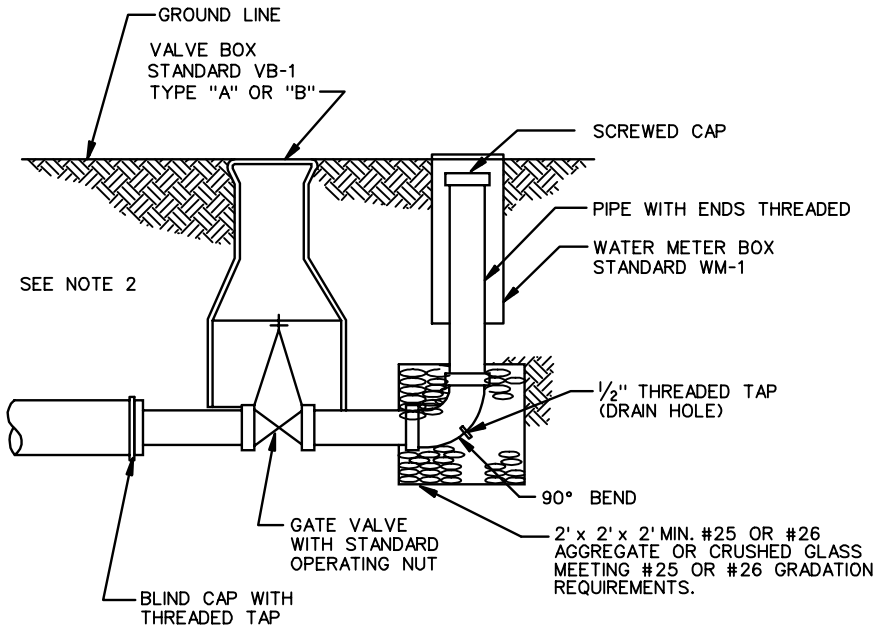

TYPE "A"

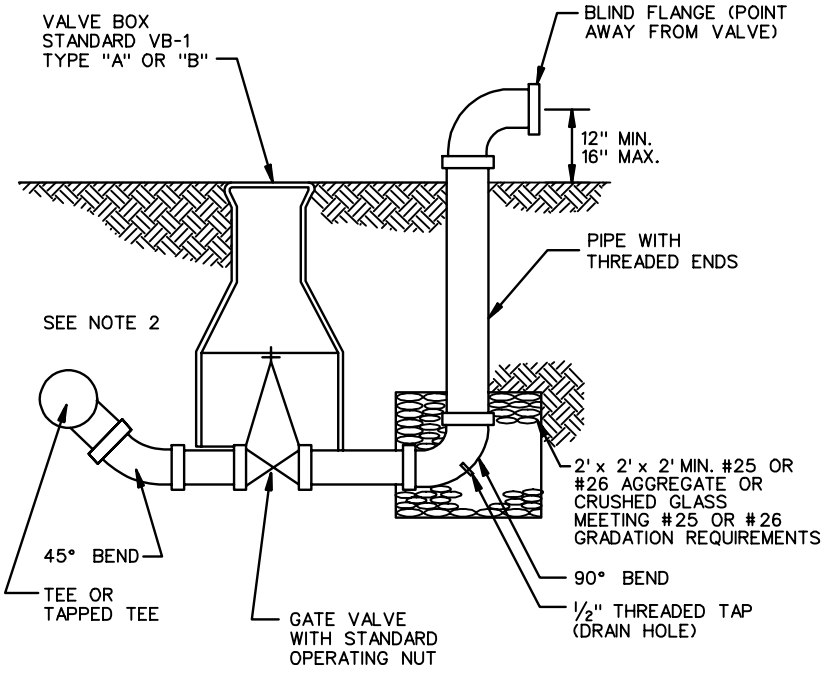

TYPE "B"

NOTES:

1. ALL BLOW-OFFS SHOULD BE PLACED IN A POSITION TO ASSURE NATURAL DRAINAGE.
2. EITHER TYPE "A" OR TYPE "B" BLOW-OFF MAY BE USED AT DEAD OR SAG SITUATION.
3. BLOW-OFF PIPE SHALL BE THREADED BLACK IRON OR GALVANIZED STEEL PIPE.
4. SIZE OF BLOW-OFF SHALL BE SPECIFIED ON THE PLANS.

SPECIFICATION REFERENCE	BLOW-OFF VALVE AND BOX (WATER AND SANITARY SEWER FACILITIES) VIRGINIA DEPARTMENT OF TRANSPORTATION	VDOT ROAD AND BRIDGE STANDARDS	
		REVISION DATE	SHEET 1 OF 1
			1409.01

ARV-1

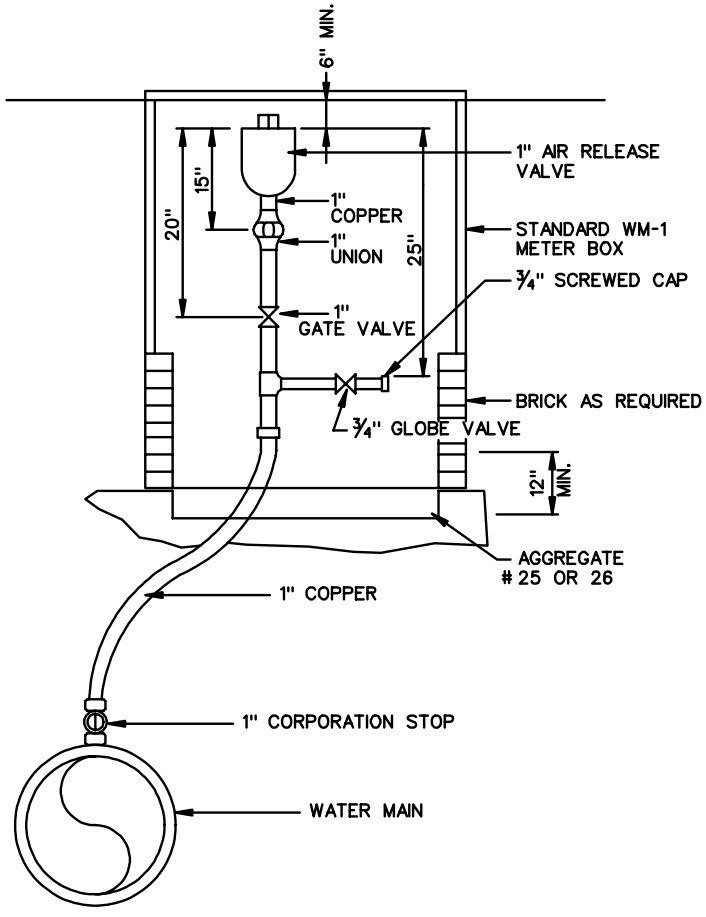

TYPE "A"

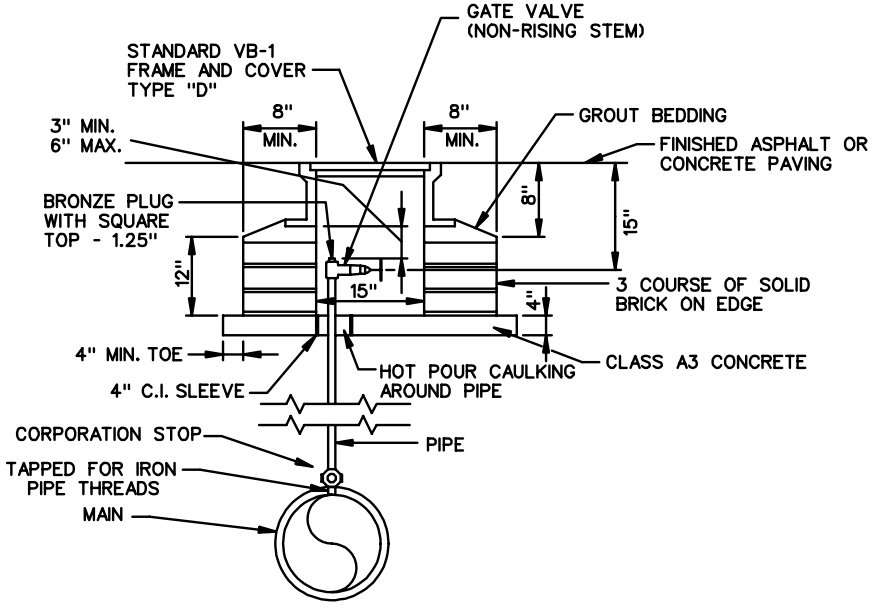

TYPE "B"

NOTES:

1. TAP FOR AIR RELEASE VALVE SHALL BE STANDARD THREADED TAP OR SADDLE TAP DEPENDING ON MANUFACTURER'S RECOMMENDATION FOR TYPE AND THICKNESS OF PIPE ENCOUNTERED.
2. GRAVEL BEDDING MAY BE USED IN PLACE OF CONCRETE IN NON-TRAFFIC AREAS AT DESCRETION OF ENGINEER.
3. PIPE SHALL BE BLACK IRON / GALVANIZED PIPE.
4. IF 4" OR 6" PVC PIPE IS USED, SADDLE IS REQUIRED FOR CORPORATION STOP.
5. ALL COPPER FITTINGS WILL BE FLARE TYPE.

VDOT ROAD AND BRIDGE STANDARDS		AIR RELEASE VALVE AND BOX (WATER AND SANITARY SEWER FACILITIES) VIRGINIA DEPARTMENT OF TRANSPORTATION	SPECIFICATION REFERENCE
SHEET 1 OF 1	REVISION DATE		
1410.01			

SMH-1

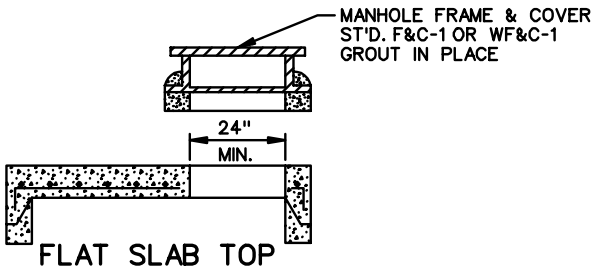

FLAT SLAB TOP
STANDARD T-MH-2

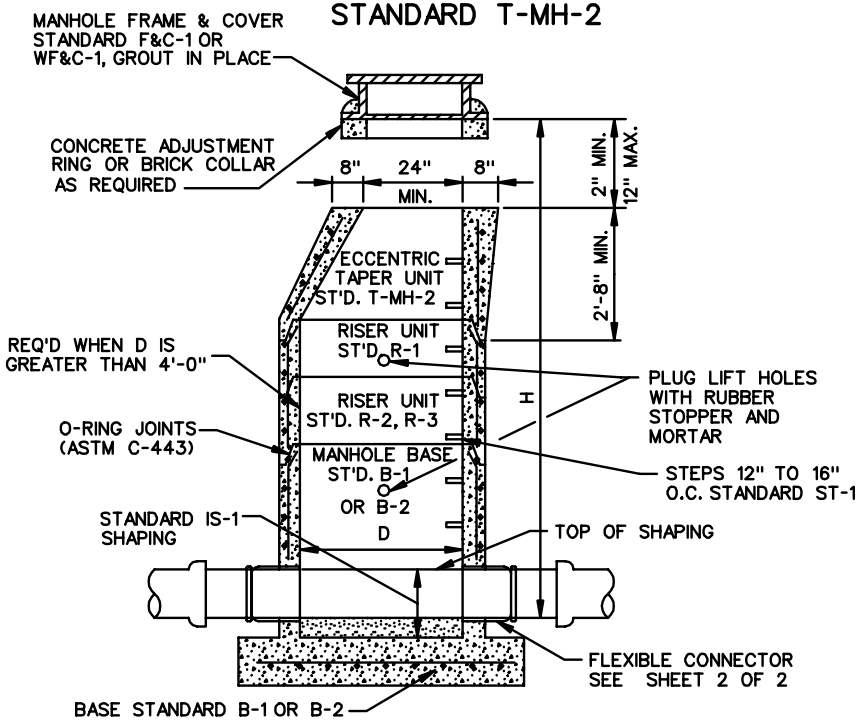

PRECAST CONCRETE MANHOLE

NOTES:

1. WHEN HEIGHT H EXCEEDS 12' A MINIMUM NOMINAL DIAMETER D OF THE BASE UNIT SHALL BE 5' WITH A SECTION HEIGHT OF 6' AND A STANDARD RISER UNIT R-2 OR R-3 SHALL BE REQUIRED.
2. FLAT SLAB TOP STANDARD T-MH-2 SHALL ONLY BE ALLOWED ON SHALLOW MANHOLES.
3. STEPS SHALL BE ENCASED IN CORROSION RESISTANT RUBBER OR OTHER MATERIAL APPROVED BY THE ENGINEER.
4. STEPS SHALL BE OMITTED WHEN SPECIFIED IN THE PLANS.
5. SEE STANDARD SHEET NUMBER 106.07, VOLUME I, FOR ADDITIONAL MANHOLE DETAILS.

NOTES:

FOR DIMENSIONS NOT SHOWN SEE VDOT ST'D. B-1, B-2 & R-1

CONCRETE ENCASEMENT TO EXTEND TO LIMITS OF EXCAVATION

DIA. OF DROP PIPE	
D-1	D-2
8"	8"
10"	8"
12"	10"
15"	12"
18"	15"
24" & ABOVE	18"

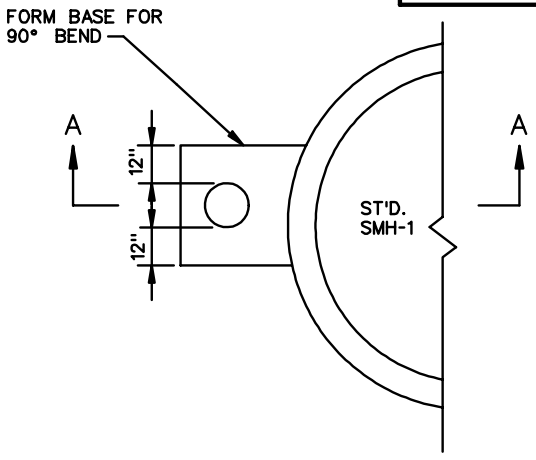

SECTION B-B

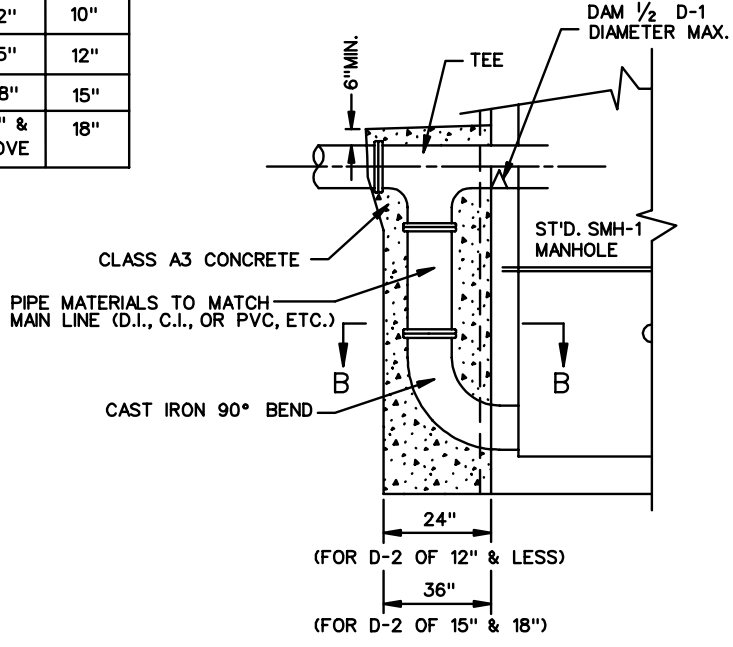

SECTION A-A

SANITARY DROP CONNECTION

SPECIFICATION REFERENCE	SANITARY SEWER MANHOLE VIRGINIA DEPARTMENT OF TRANSPORTATION	VDOT ROAD AND BRIDGE STANDARDS
		REVISION DATE / SHEET 1 OF 2
		1411.01

SMH-1

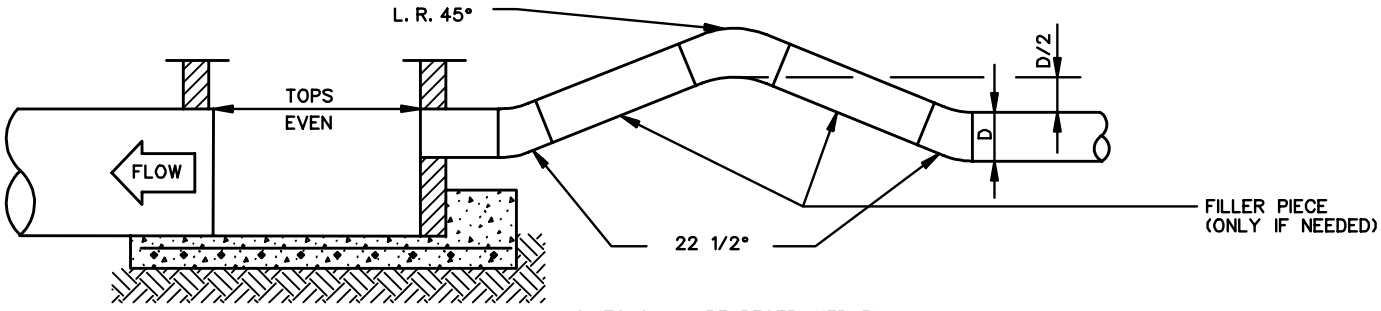

ALL JOINTS SHALL BE RESTRAINED BY
RETAINER GLANDS OR THREADED RODS (GALV.)

FORCE MAIN DISCHARGE
TYPE 1

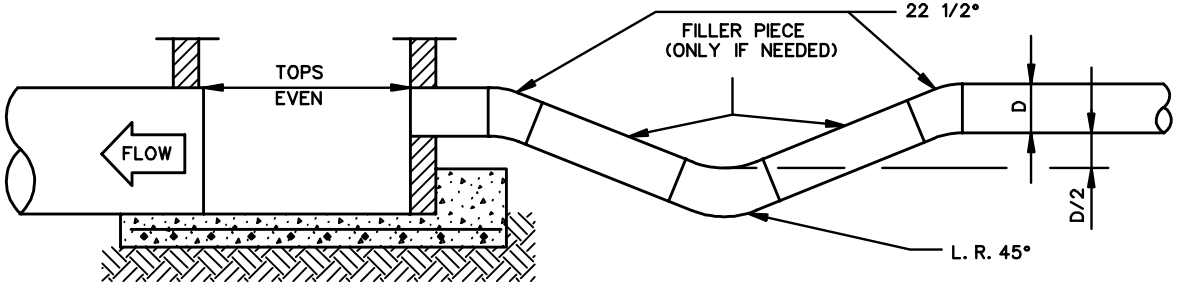

ALL JOINTS SHALL BE RESTRAINED BY
RETAINER GLANDS OR THREADED RODS (GALV.)

FORCE MAIN DISCHARGE
TYPE 2

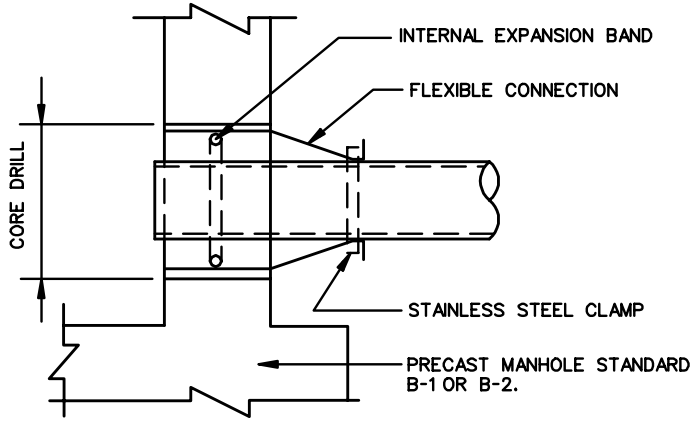

FLEXIBLE CONNECTION

PIPE TO PRECAST MANHOLE CONNECTIONS SHALL BE MADE WITH A FLEXIBLE BOOT. THE BOOT SHALL MEET ASTM SPECIFICATION C-923 AND CONSIST OF NEOPRENE RUBBER, EPDM RUBBER, OR POLYISOPRENE RUBBER, WHERE PREFERENCE MAY BE GIVEN TO A CERTAIN MATERIAL IN PROJECT SPECIFIC INSTANCES. THE INTERNAL EXPANSION BAND TO SECURE THE BOOT IN PLACE SHALL BE COMPOSED OF STAINLESS STEEL OR A NON-METALLIC MATERIAL. THE EXTERNAL BAND TO CLAMP AND SEAL THE BOOT TO THE PIPE SHALL BE CORROSION RESISTANT STAINLESS STEEL CONFORMING TO ASTM SPECIFICATION A-167. THE PORT TO RECEIVE THE BOOT SHALL BE CORE DRILLED AND SHOULD BE MANUFACTURED TO ALLOW FOR LATERAL AND VERTICAL MOVEMENT. ALL FIELD INSTALLATION OF PIPE THRU MANHOLE SEAL SHALL BE DONE IN ACCORDANCE WITH THE MANUFACTURER'S RECOMMENDATIONS AND SPECIFICATIONS.

VDOT ROAD AND BRIDGE STANDARDS	SANITARY SEWER MANHOLE WATER AND SANITARY SEWER FACILITIES VIRGINIA DEPARTMENT OF TRANSPORTATION	SPECIFICATION REFERENCE
SHEET 2 OF 2 / REVISION DATE		
1411.02		

WF&C-1

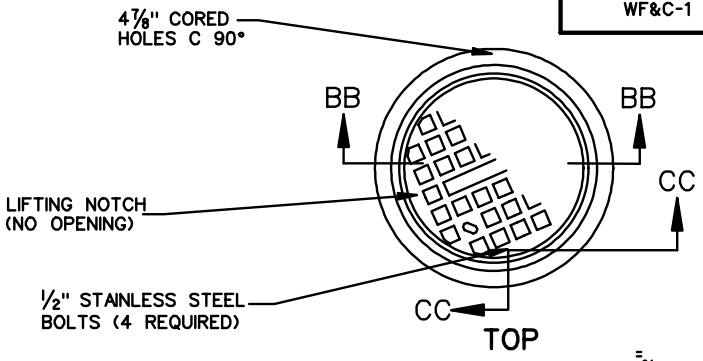

APPROXIMATE WEIGHTS

FRAME	220±	11 LBS.
COVER	260±	13LBS.
TOTAL	480±	24LBS.

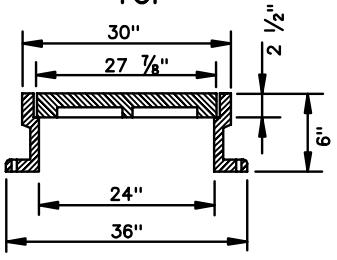

SECTION BB - BB

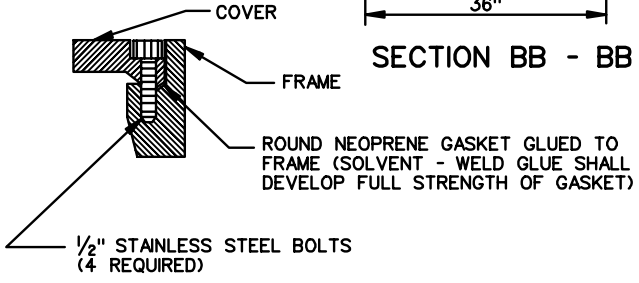

SECTION CC - CC

1. DETAILS NOT SHOWN ARE AS REQUIRED FOR ST'D F&C-1 M.H. FRAME AND COVER.
2. FRAME SHALL BE SET IN 1/4" BED OF NON-SAG JOINT SEALER & BOLTED TO THE MANHOLE CONE SECTION WITH 4 3/4" ANCHOR BOLTS.
3. CAST IRON SHALL CONFORM TO ASTM A-48, CLASS 30S.
4. SEATING SURFACES BETWEEN FRAME AND COVER SHALL BE MACHINED.
5. 1/4" x 1" CONTINUOUS NEOPRENE GASKET SHALL BE INSTALLED BETWEEN THE INNER COVER AND THE FRAME.
6. RECESSED PICK HOLE SHALL NOT EXTEND THRU THE COVER.

WATERTIGHT MANHOLE FRAME AND COVER

F&C-1

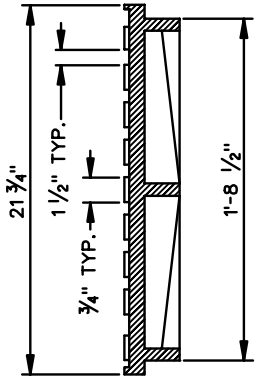

SECTION A-A

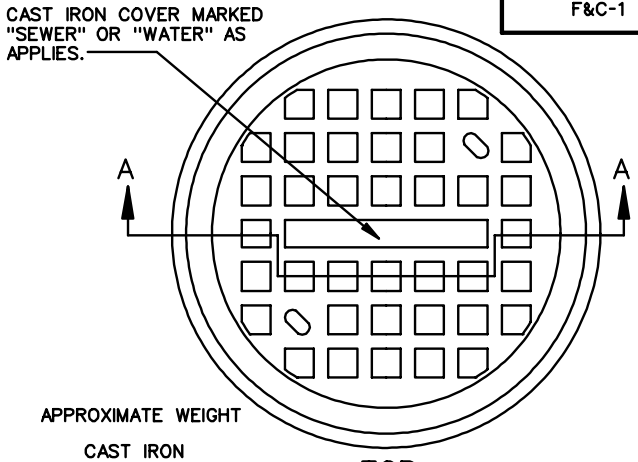

APPROXIMATE WEIGHT

CAST IRON
FRAME 239 ± 12 LBS.
COVER 137 ± 7 LBS.

TOP

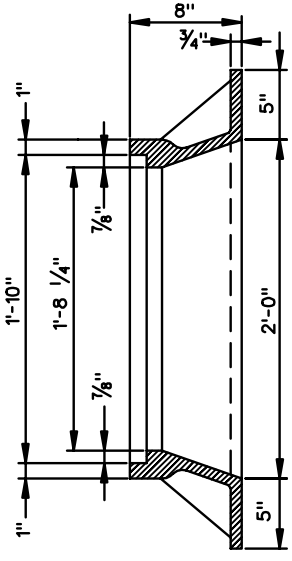

SECTION B-B

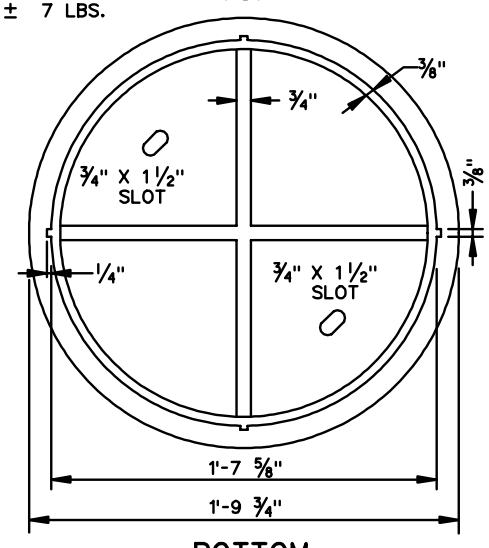

BOTTOM

NOTES:

1. CAST IRON SHALL CONFORM TO ASTM A-48M, CLASS 30S.
2. CASTING AND FRAME ARE TO BE MACHINED TO ENSURE A FIRM TIGHT FIT.
3. DIMENSIONS NOT SHOWN ARE THE SAME AS STANDARD MH-1 FRAME AND COVER.

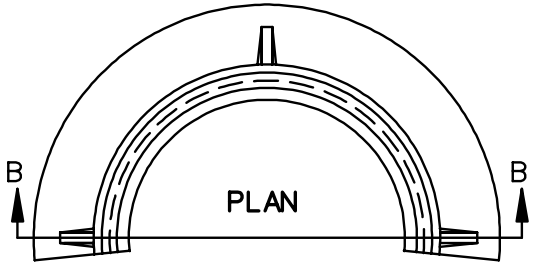

MANHOLE FRAME AND COVER

SPECIFICATION REFERENCE	WATER AND SANITARY SEWER FACILITIES VIRGINIA DEPARTMENT OF TRANSPORTATION	VDOT ROAD AND BRIDGE STANDARDS	
		REVISION DATE	SHEET 1 OF 1
			1412.01

SCO-1

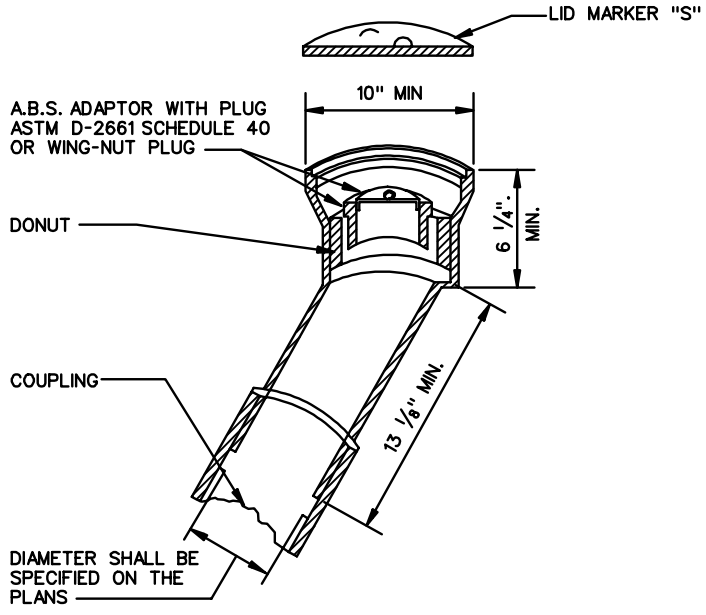

NOTES:

1. CLEANOUT MAY ALSO BE INSTALLED WITH IRON BODY SCREW WITH BRASS PLUG AND ONE INCH OF LEAD POURED IN PLACE & CAULKED ON INSIDE & OUTSIDE EDGE.
2. CLEANOUT SHALL BE SUITABLY BRACED WITH 2" x 4" CROSS PIECE EXTENDED OVER & HAVING SOLID BEARING AT LEAST ONE FOOT ON EACH SIDE OF DITCH
3. CLEANOUT WYE AND RISER SHALL BE CONSTRUCTED OF THE SAME MATERIAL AS THE MAIN UNLESS OTHERWISE SPECIFIED.

TYPE "A"

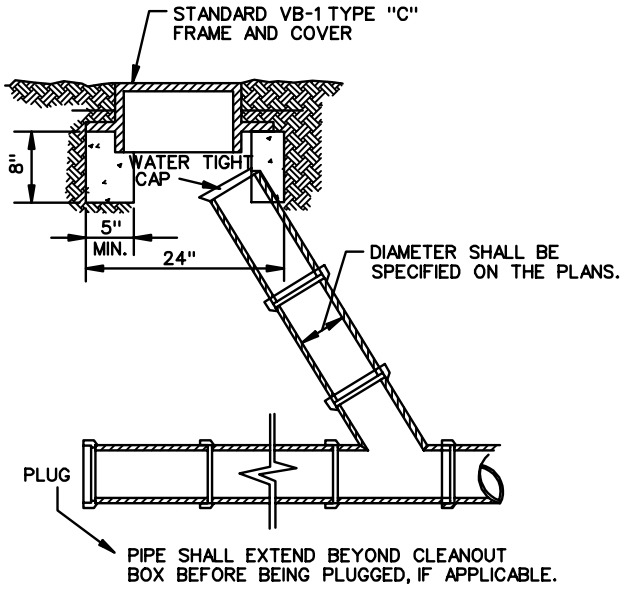

NOTES:

1. CAST IRON FRAME AND COVER SHALL BE SUFFICIENTLY TRUE TO A PLANE SURFACE, SO THAT TOPS WILL NOT ROCK.
2. CLEANOUT WYE AND RISER SHALL BE CONSTRUCTED OF THE SAME MATERIALS AS THE MAIN UNLESS OTHERWISE SPECIFIED.

TYPE "B"

VDOT ROAD AND BRIDGE STANDARDS		SEWER CLEANOUT	SPECIFICATION REFERENCE
SHEET 1 OF 1	REVISION DATE	VIRGINIA DEPARTMENT OF TRANSPORTATION	
1413.01			