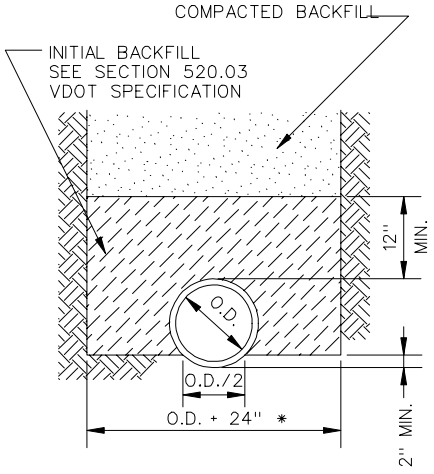

TYPE 1

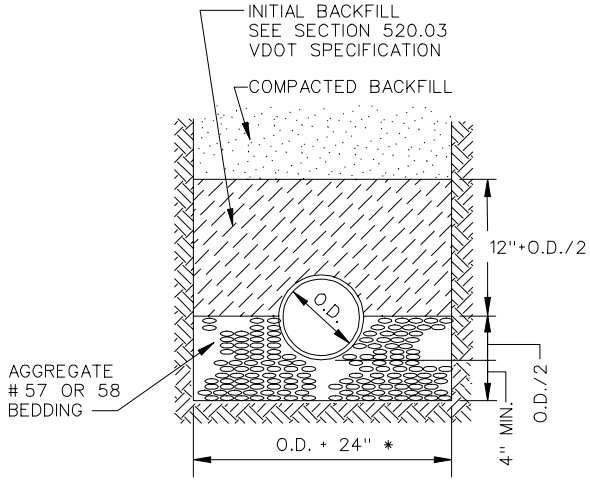

TYPE 2

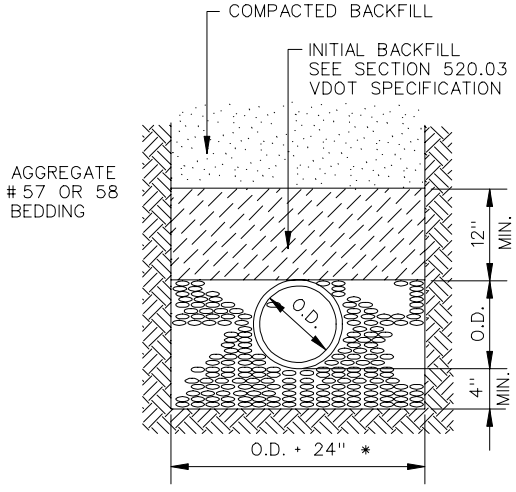

TYPE 3

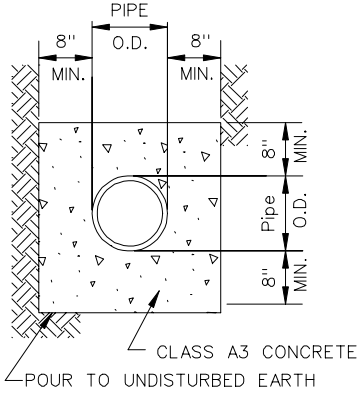

CONCRETE ENCASEMENT

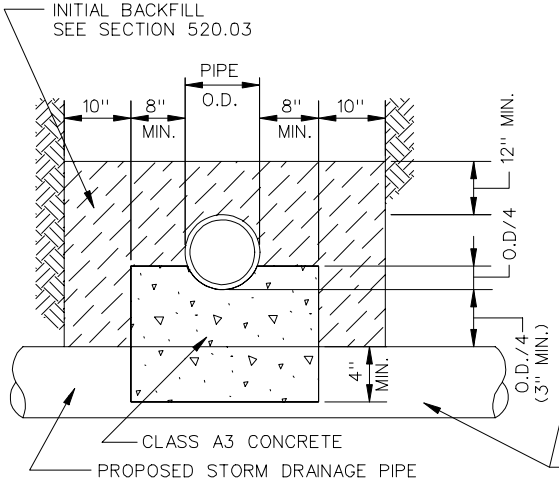

CONCRETE CRADLE

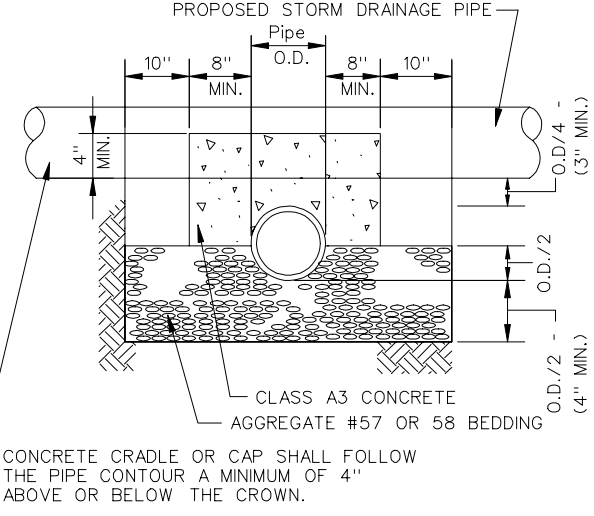

CONCRETE CAP

NOTES:

1. WHERE THE TRENCH BOTTOM IS IN ROCK, IT SHALL BE EXCAVATED TO A MINIMUM OF 8" BELOW THE BOTTOM OF THE PIPE AND BACKFILLED WITH BEDDING MATERIAL.
2. WHERE PIPE FOUNDATIONS ARE YIELDING, PIPE SHALL BE BEDDED ON A MINIMUM OF 8" BEDDING MATERIAL.

* FOR PIPE LESS THAN 12" THE TRENCH WIDTH MAY BE 36" MAXIMUM.

UTILITY BEDDING AND PROTECTION
WATER AND SANITARY SEWER FACILITIES

VIRGINIA DEPARTMENT OF TRANSPORTATION